772

Off-Highway Truck

Engine		
Engine Model	Cat® C18 ACERT™	
Gross Power – SAE J1995	446 kW	598 hp
Net Power – SAE J1349	399 kW	535 hp
Weights – Approximate		
Target Gross Machine Operating Weight	82 100 kg	181,000 lb

Operating Specifications		
Nominal Payload Class	45 tonnes	50 tons
Body Capacity – SAE 2:1	31.3 m^3	41 yd^3

- Refer to the Caterpillar 10/10/20 Overload Policy for maximum gross machine weight limitations.
- Capacity with flat floor body.

772 Off-Highway Truck

Engineered for performance, designed for comfort, built to last.

Power Train – Engine

The Cat® C18 engine with ACERT™ Technology uses advanced engine technology to reduce emissions without after-treatment. The turbocharged, aftercooled 6-cylinder engine has faster response for superior performance in demanding applications. **pg. 4**

Power Train – Transmission

The Cat® seven-speed power shift transmission matched with the Cat C18 engine with ACERT Technology provides constant power and efficiency over a wide operating speed range for optimal power train performance. **pg. 6**

Structures

The 772 features a mild-steel, box-section type frame to deliver durability and long life with low operating costs. Castings and forgings are strategically placed in high-stress areas to evenly distribute stresses and provide long fatigue life. **pg. 8**

Serviceability

The 772 offers 500-hour engine service intervals – 250 hours more than the 771D. Simplified service and maintenance features combined with improved service access are designed to reduce downtime. **pg. 14**

Truck Body Systems

The 772 offers two body types with six different body liner system selections to accommodate almost any type of application. These body liner systems are designed to maximize strength and durability while providing the lowest cost per ton. **pg. 16**

Information and Monitoring Systems

Standard on the 772, the Cat Messenger system provides real-time engine performance and operating data. **pg. 18**

Top Performance.
Developed specifically for construction, mining, and quarry applications, the 772 optimizes demands for lower cost per ton, challenges of finding skilled labor, and overall health and safety.

Reliable, Durable, Dependable.
Rugged construction and easy maintenance procedures ensure long life with low operating costs.

Operator's Station

The 772 features an all new operator station with enhanced visibility, increased operator space and ergonomically designed controls that set new industry standards for operator comfort. All controls and gauges are positioned for optimum efficiency and total machine control. **pg. 9**

Engine – Power Train Integration

The Cat Data Link electronically combines engine, transmission, brake and operational information to optimize overall truck performance. Stored diagnostic data can be accessed via the Cat Electronic Technician (Cat ET) service tool to improve troubleshooting and reduce downtime. **pg. 10**

Brake System

Front dry disc and rear oil-cooled, multiple disc brakes are now hydraulically controlled, reducing maintenance costs and improving operator control and modulation. They provide exceptional, fade-resistant braking and retarding for maximum performance and productivity in all haul-road conditions. **pg. 12**

Safety

Caterpillar sets the standard when it comes to safety in the design and manufacturing of heavy equipment. Safety is not an afterthought at Caterpillar, but an integral part of all machine and systems designs. **pg. 20**

Customer Support

Caterpillar® dealers provide unmatched product support, anywhere in the world. With industry-best parts availability and a wide range of maintenance and service options, Cat dealers have what it takes to keep your hauling machines productive. **pg. 21**

Power Train – Engine

The Cat® C18 engine with ACERT™ Technology is built for power, reliability and efficiency for superior performance in the toughest applications.

Cat® C18 Engine with ACERT™ Technology. Caterpillar optimizes engine performance while meeting U.S. EPA Tier 3 and European Union Stage IIIa engine emission regulations. ACERT™ Technology reduces emissions during the combustion process by using advanced technology in the air and fuel systems, in conjunction with integrated electronics. Caterpillar meets emission regulations at the combustion source, rather than recycling exhaust gases.

Block. The C18 block incorporates a one-piece, grey iron block, featuring generous ribbing for stiffness and heavy bearing bulkheads for rigidity and strength.

Caterpillar also has moved away from pipe thread ports to straight-thread, o-ring connection points, reducing the potential for leaks. This new design supports the engine's higher compression ratios and increased power density.

Cylinder Head. The new cross flow air design routes air straight across the head removing bends and turns that create resistance to flow. By removing the resistance to flow, parasitic loads are reduced as pumping needs are lessened. The cylinder head is a one piece, cast iron component with a newly designed graphite and steel composite head gasket that seals the combustion chamber with better rigidity and wear capability.

Overhead Cam. A single overhead cam is driven by gears on the front of the engine, which significantly reduce noise and vibration. Caterpillar also has added two pendulum absorbers, mounted at the front of the camshafts to further reduce noise and vibration.

Pistons, Connecting Rods, Cylinder Liners. New design and material improvements to the pistons, rods and liners have been made to support the higher cylinder pressures and the 16.3:1 compression ratios associated with ACERT Technology, while still providing durability to engine overhaul.

A single-piece steel piston, pulsator-tested to 25 560 kPa (4,000 psi), is matched to a robust connecting rod to ensure long component life. The piston's steel skirt increases its durability and results in reduced thermal expansion, allowing a tighter piston fit and reduced liner vibration. The overall piston surface area reduces friction and enhances fuel economy.

The newly designed connecting rod allows better lubrication and cooling and is more securely fastened to the crankshaft using two additional bolts. The new improved rod bearings are made of steel-backed copper alloy with lead tin overlay. This new metallurgy reduces flaking and offers better fatigue strength.

Cylinder liners are wet liners made of compacted graphite and iron for excellent wear and strength characteristics. Also, the tolerances between the pistons and the wet cylinder liners have been tightened to unprecedented levels for reduced blow-by and higher efficiency.

Turbochargers. The single, waste-gated turbocharger found on the C18 engine is water-cooled to accommodate sudden hot machine shutdowns. Water cools the bearings during this event, preventing bearing seizure. The C18 engine also includes a new turbine housing and an additional spacer bearing. The addition of a spacer bearing eliminates snap rings and, therefore, reduces complexity and improves shaft motion.

The turbocharger for the 772 features a titanium compression wheel. The titanium compression wheel is used to withstand the higher compression wheel speeds that are required, especially in high altitude applications. The titanium wheel can withstand these high-spin conditions with much better wear characteristics.

Changes enable the C18 to deliver longer life and lower maintenance costs, and contribute to good fuel economy. The design also provides high horsepower with improved response time while keeping exhaust temperatures low for long hours of continuous operation. The waste-gate turbocharger design improves engine response and peak torque, while providing higher boost over a wider range.

MEUI Fuel System. The Cat MEUI fuel system combines the technical advancement of electronic control with the simplicity of direct mechanically controlled unit fuel injection. This system electronically controls injection pressure by sensing the engine speed and load conditions over the entire engine operating speed range.

A low-pressure fuel transfer pump provides fuel to the injectors, which then increases the pressure to deliver very fine, atomized fuel particles into the combustion chamber with precise timing and duration. The result is a more complete fuel burn with lower emissions and better engine response.

Oil Coolers. The 772 is equipped with three oil coolers: an engine-mounted engine oil cooler, an engine-mounted transmission/torque converter oil cooler, and a remote-mounted, brake, hoist and hydraulic fan oil cooler. These coolers allow major components to expel heat, maintaining optimal operating temperatures.

Fuel Filters. The C18 engine is equipped with two fuel filters. The primary filter is machine-mounted and features oil/water separation and an electric priming pump. The electric pump provides easier priming and better contamination control than a manual unit. The secondary fuel filter is also machine mounted, and has a switch that monitors pressure changes and provides pressure drop warnings to the operator.

Advanced Diesel Engine Management A4 Engine Controller. The ADEM™ A4 electronic control module provides flexible fuel mapping, allowing the engine to respond quickly to varying application needs.

Next Generation Modular Radiator (NGMR). The new modular cooling system with a single-pass flow core design uses brazed construction for stronger joints, better leak prevention and higher heat transfer. The simpler design of the single-pass system, which replaces the two-pass flow folded core system enables coolant to enter one end of the core and flow out the opposite end for more efficient ambient cooling capability and greater durability.

Hydraulic Demand Fan and Accessory Drive. The 772 includes a standard, variable-speed, on-demand fan. This fan provides cooling airflow only when necessary, resulting in reduced parasitic losses, a reduction of fuel consumption and fan-generated noise.

The C18 engine includes a Poly-V accessory drive belt with an auto-tensioner, which is self adjusting.

Power Train – Transmission

Cat power train delivers more power to the ground for greater productivity and lower operating costs.

Mechanical Power Train. The Cat mechanical drive power train and power shift transmission provides unmatched operating efficiency and control on steep grades, in poor underfoot conditions, and on haul roads with high rolling resistance.

Transmission. Pairing the Caterpillar seven-speed planetary power shift transmission with the C18 diesel engine with ACERT Technology delivers constant power over a wide range of operating speeds.

• Transmission Chassis Control (TCC). Transmission shifting is based on Transmission Output Speed for optimum performance efficiency and clutch life. The TCC provides integrated functionality to controlled throttle shifting, directional shift management, neutral coast inhibitor, body-up shift limiter and body-up reverse neutralizer.

Throttle Lock. The operator can now electronically lock the throttle pedal at full throttle, to reduce fatigue on long uphill hauls. The throttle can be locked on by momentarily depressing the throttle lock switch located on the operator console, while depressing the pedal fully. The throttle is released whenever braking is applied or the throttle is again depressed.

Lock-Up Torque Converter. Combines maximum rimpull and cushioned shifting of torque converter drive with the efficiency and performance of direct drive. The torque converter includes: an additional clutch plate to maintain power train capability for higher horsepower and top speed, a new torque converter adapter that provides extra length to house the additional clutch plate and enables the converter components to be changed without having to change the housing, and a new sump oil level switch that serves as an emergency warning if oil is lost. The lock-up torque converter engages at approximately 8 km/h (5 mph), delivering more power to the wheels.

Lock-Up Clutch. Quickly releases and re-engages to reduce power train torque loads for smoother shifting, long life and a more comfortable ride.

New Differential and Proven Final Drives. The new Cat differential works with the proven final drives as a system to deliver maximum power to the ground. For improved serviceability, the pinion gear is cantilever mounted, which allows inspection of the differential without pulling the rear-end. Visual inspection of the pinion gear and bearings can be performed in 1-2 hours versus 8 hours on the previous models. In addition, the differential bevel pinion gear set is designed for improved adjustability, which results in improved contact patterns and life. The differential gear set also provides enhanced bending life for steeper grade applications.

New Differential Center Housing. A new, ductile iron center housing improves quality and reliability. The improved stiffness allows for better main support bearing life. The new housing also uses bolts, reducing maintenance time. This change also improves wheel station bolted-joint life.

New A-Frame. The new A-frame mounts directly to the spindles. The new A-frame eliminates the "king" bolt and includes a pin and bushing style mounting, consistent with the 777 and 793. This new design is simpler to maintain and service.

New Ductile Iron Spindles. A stress-optimized, ductile iron spindle is splined to the rear brakes, reducing brake pack rebuild time by up to two hours. In addition, the spindles are longer and wider with fewer seals for increased strength and durability.

Brake Packs. A single-piece brake anchor eliminates more than 200 fasteners and a row of bolted joints. Rebuild time is reduced by up to two hours. In addition, the brake pack is removable without taking the spindle off the truck.

The 772 features 30 brake discs. The brake discs have increased in diameter from 482.6 to 533.4 mm (19 to 21 in). By increasing the diameter, Caterpillar has improved the overall reliability and durability of the brake packs and has also designed the brake packs to improve the OD/ID ratio. The new 772 brake pack design, moves the braking forces to the outer edge of the disc, thereby using greater surface area for improved braking forces and longer life, improving reliability and lowering maintenance cost.

Wheel Stations. The wheel stations now integrate both the wheel and the hub. The single-piece design reduces removal and installation time, and the risk of brake cooling oil leakage. The inner Duo-Cone™ seal has been changed from a formed type to a cast design. Brake cooling flow and the Duo-Cone seal has also been reversed for better sealing performance and improved seal life.

Wheel stations are now interchangeable, reducing the number of replacement parts: left and right wheel stations are symmetric and can be interchanged. In addition, the new design eliminates one o-ring seal, which improves reliability and simplifies the system and the wheel bearings have been enhanced for longer bearing life.

Tires. The 772 uses larger 21.00R33 tires. The larger tires increase the load carrying capacity of the machine, which is needed for the increased target payload of 45 tonnes (50 tons). The new 772 lowers the cost-per-ton by optimizing the tire size to GVW ratio.

- **Steering System.** Hydraulic steering control system is designed for exceptional smoothness and precise control. A separate circuit prevents cross contamination for long life.

- **Battery Powered Supplemental Steering.** A battery powered supplemental steering system uses pressure accumulators and allows up to three 90 degree turns in case of engine failure.

- **Wheels and Rims.** Cast rear wheels and Cat center-mount rims are mounted using studs and nuts to minimize maintenance and maximize durability.

Structures

Rugged Cat structures are the backbone of the 772 off-highway truck's durability.

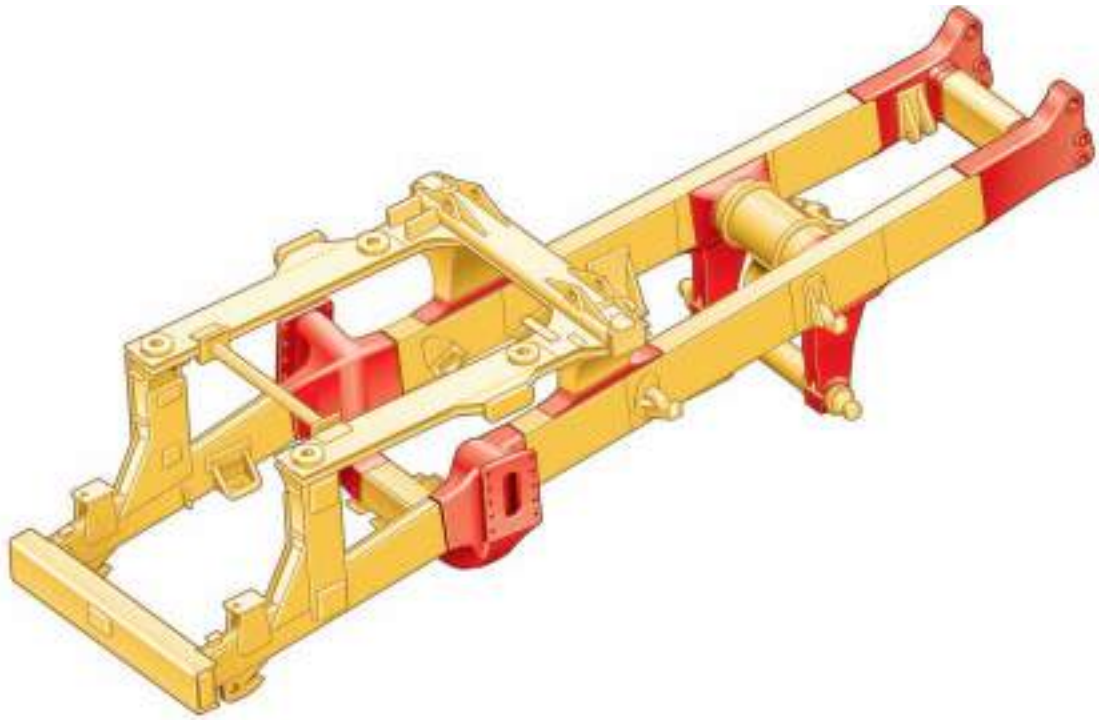

Box-Section Design. The 772 frame uses a box-section design, incorporating two forgings and 13 castings in high-stress areas with deep penetrating and continuous wrap-around welds to resist damage from twisting loads without adding extra weight.

• **Steel Structures.** Mild steel used throughout the frame provides flexibility, durability and resistance to impact loads, even in cold climates and allows for easy field repairs.

• **Castings.** Castings have large radii with internal reinforcing ribs to dissipate stress in areas of high stress concentration. Castings move welds to lower stress areas for greater frame life.

Integral Four-Post ROPS Cab. Resiliently mounted to the main frame with all-new cab mounts that reduce vibration and sound, the integral ROPS is designed as an extension of the truck frame. The ROPS/FOPS structure provides "five-sided protection" for the operator.

Forgings and Castings.

- The 772 features a drop tube/casting design and two forged steel mountings for hoist cylinders, similar to the design as found on the 775.
- A volcano casting that holds the center tube is enhanced with thicker wall dimensions for increased durability.
- New strut-mount castings have been moved 254 mm (10 in) forward and 25.4 mm (1 in) outward on each side. These thicker strut-mount castings and their location improve ride characteristics as well as durability.
- New steering casting (same as 775) accommodates larger steering cylinders and ball studs.
- New tail casting accommodates new angled rail design.

Superior Weld Quality. Structural frame welds are J-groove type, ensuring full weld penetration for strength and longevity. During fabrication, weld integrity is further enhanced by rotating the frames 360 degrees to provide optimal, flat welding surfaces.

Technology Enhanced. Caterpillar structures are tested using System Structural Analysis (SSA) to dynamically simulate operations in field environments and identify potential structural improvements in high stress areas. With analysis of machine structures and variables, such as haul road and payload, structural improvements were made to the frame to accommodate the new cab, platform, engine and radiator.

Quality Control. A Coordinate Measuring Machine (CMM) is used to inspect truck frames for consistency in the manufacturing process. In addition all critical welds receive testing to verify weld penetration which results in frame durability.

Operator's Station

Ergonomically designed for operator comfort, superior control and high productivity.

All New Center-Mounted Cab. Center cab positioning provides additional room and creates a walk-in-style cab. The new configuration allows the operator to easily enter and exit the cab. The cab environment offers a spacious surrounding, giving the operator the ability to stretch out and providing superior comfort for an entire operating shift. The operator seat is located on the right hand side of the cab with the trainer to the immediate left.

Ergonomic Layout. The 772 operator's station is ergonomically designed for total machine control in a comfortable, productive and safe environment. All controls, levers, switches and gauges are positioned to maximize productivity and minimize operator fatigue.

New ISO Designed Cab Mounts. Integral, sound-suppressed cab is resiliently mounted to the frame to isolate the operator from sound and vibration for a quiet, secure and comfortable ride.

Viewing Area. Designed for excellent all-around visibility and clear sight lines to the haul road. The large viewing area, with 52 percent more glass, enables the operator to maneuver with confidence for greater productivity.

Air Suspension Seat w/Three-Point Operator Restraint. Ergonomically designed, fully adjustable air suspension seat with adjustable armrests provides optimal driving comfort. A wide, retractable 3-point seat/shoulder belt provides a secure, comfortable restraint.

Hoist Lever. Four-position, low effort electronic hoist control system is positioned next to the gear selector in the right-hand console.

Secondary Brake Pedal. Conveniently located on the floor for easy operator control.

Steering Column. Comfortable steering wheel with tilt and telescoping function provides a comfortable driving position for all operators.

Transmission Console. Ergonomic gear shift lever with backlit gear indicators provides easy operation. The parking brake function is integrated into the gear selector.

Trainer Seat. By moving the trainer seat to the left of the operator, the trainer may enter/exit the vehicle using the same stairway door as the operator. When not in use, the fold-down trainer seat creates a working surface with cup holder. Under seat storage is convenient for stowing a lunch box.

Operator Controls. Easy to reach turn signal, high beam, intermittent windshield wiper and windshield washer controls are located on the left side of the steering column, and are designed for optimum efficiency and comfort.

Radio Ready. Cab is prewired with power converter, speakers, wiring harness, antenna and necessities for add-on communication systems.

Multiple Power Ports. Power ports are conveniently located in three locations in the cab: one in the right-hand console, two behind the trainer seat, and one in the dash.

Truck Production Management System (TPMS) (Optional). TPMS provides valuable payload and cycle time data, which is viewed through Messenger. Now the system provides 2,400 cycles, as opposed to the previous 1,400 cycles, and takes a second payload measurement when the truck reaches second gear for increased accuracy. Standard LED lamps replace incandescent lamps on the TPMS, extending lamp life by 25 times.

Engine – Power Train Integration

The system electronically combines critical power train components to work together more intelligently to optimize overall truck performance.

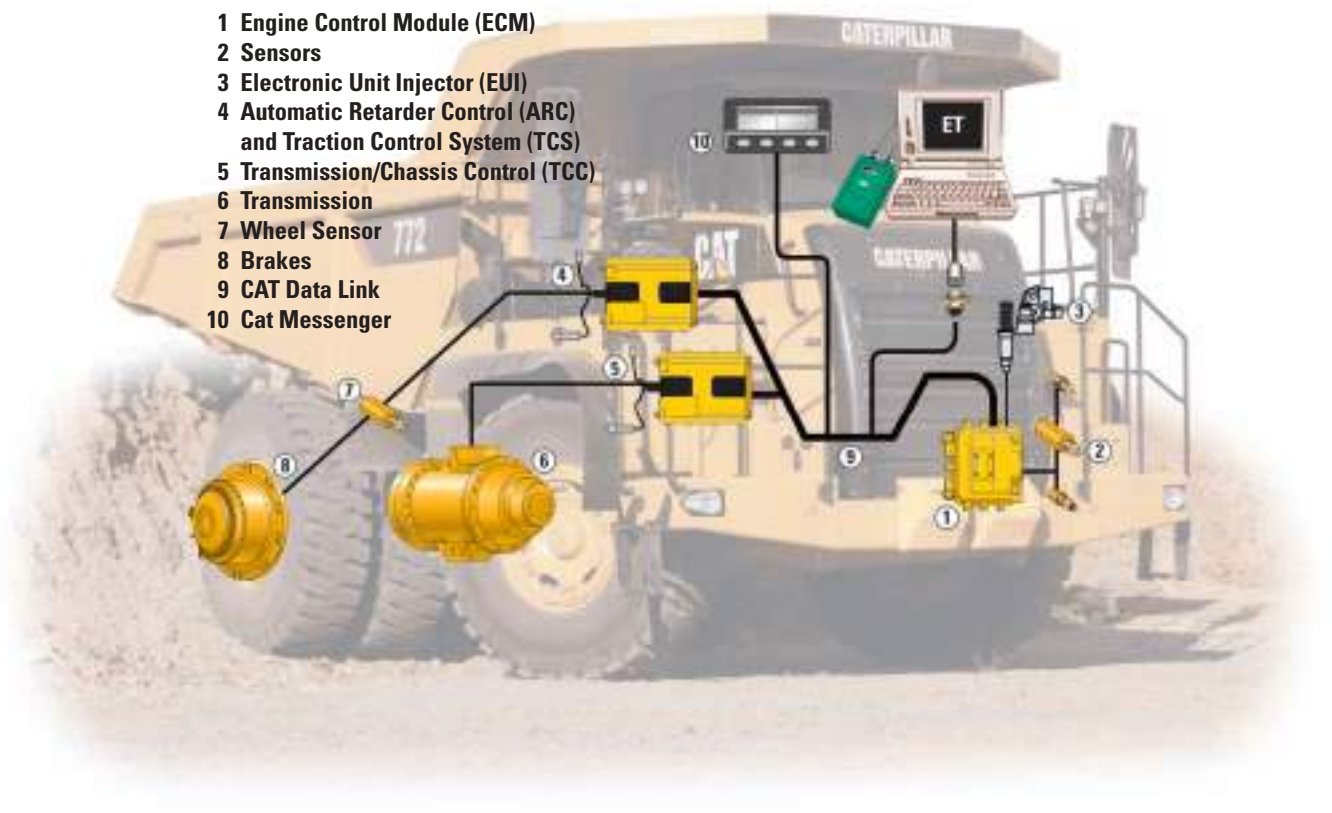

Cat Data Link. Electronically integrates machine computer systems to optimize overall power train performance, increase reliability and component life, and reduce operating costs. All the information from these controls can be accessed through a laptop computer with Cat ET.

Transmission Chassis Control (TCC). TCC uses electronically transferred engine rpm data to execute shifts at preset points for optimum performance, efficiency and clutch life.

Electronic Technician (Cat ET). Cat ET service tool provides service technicians with easy access to stored diagnostic data through the Cat Data Link to simplify problem diagnosis and increase machine availability. Cat ET is beneficial because of how it displays the status of all engine parameters, including throttle position, timing and fuel flow. Critical data from the electronic engine and transmission controls, including transmission shifting, engine speed and fuel consumption, provides service technicians with enhanced diagnostic capability to reduce downtime and operating costs.

Controlled Throttle Shifting. Regulates engine rpm during shifting to reduce power train stress and clutch wear by controlling engine speed, torque converter lock-up and transmission clutch engagement for smoother shifts and longer component life.

Directional Shift Management. Regulates engine speed during directional shifts to prevent damage caused by high-speed directional changes.

Neutral Coast Inhibitor. Prevents the transmission from shifting to neutral at speeds above 6.5 km/h (4 mph), protecting the transmission from operating with insufficient lubrication.

Body-up Shift Limiter. Prevents the transmission from shifting above a pre-programmed gear without the body being fully lowered. This function is programmable via Cat Electronic Technician (Cat ET) and Messenger.

Body-up Reverse Neutralizer. Automatically shifts the transmission to neutral if the hoist lever is activated while the transmission is shifted in reverse.

Overspeed Protection. The transmission control electronically senses engine conditions and automatically up-shifts one gear to prevent overspeeding. If overspeeding occurs in the top gear, the lock-up clutch is disengaged, and the brakes are applied.

Programmable Top Gear. Transmission top gear maximum can be set using Cat Messenger or the Cat ET service tool to help the operator maintain speed limits.

Anti-Hunt Function. This function minimizes shifting by not allowing the transmission to up or down shift immediately after a shift has occurred. This prevents gear hunting when operating near a shift point and minimizes transmission shifting for increased component life.

Downshift Inhibitor. Prevents engine overspeeding by keeping the transmission from downshifting until engine speed reaches the downshift point.

Economy Shift Mode. Modifies engine maps for better fuel economy.

Reverse Shift Inhibitor. Protects the engine from abrupt directional changes by slowing down the engine before shifting the transmission into reverse.

Cat Messenger. Critical data from the engine and transmission, including transmission shifting, engine speed and fuel consumption, provides service technicians with enhanced diagnostic capability, through Cat Messenger, to reduce downtime and operating costs.

Traction Control System (TCS) (Optional). TCS electronically monitors and controls rear wheel slippage for greater traction and enhanced truck performance in poor underfoot conditions.

Hydraulic Power Management System. The system reduces parasitic losses in the power management system components. The system is operated by two new variable displacement piston pumps. These pumps primarily provide for the steering and are independent of the brake and hoist circuit.

Brake System

Reliable braking with superior control gives the operator the confidence to focus on productivity.

Oil-Cooled Multiple Disc Brakes. Cat dry front and rear oil-cooled, multiple disc brakes are now hydraulically controlled, reducing maintenance costs.

The 772 brakes provide exceptional, fade-resistant braking and retarding for maximum performance and productivity in all haul-road conditions.

Extended Life Multiple Disc Brakes (Optional). Extended life friction material has double the wear life of standard brakes and is twice as resistant to glazing for more consistent braking power with less noise.

Brake Design. Cat rear oil-cooled disc brakes are designed with large discs and plates for reliable, adjustment-free operation and performance. Rear brakes are completely enclosed and sealed to prevent contamination and reduce maintenance.

Long Life. An oil film prevents direct contact between the discs. This design absorbs the braking forces by shearing the oil molecules and carrying heat away to extend brake life.

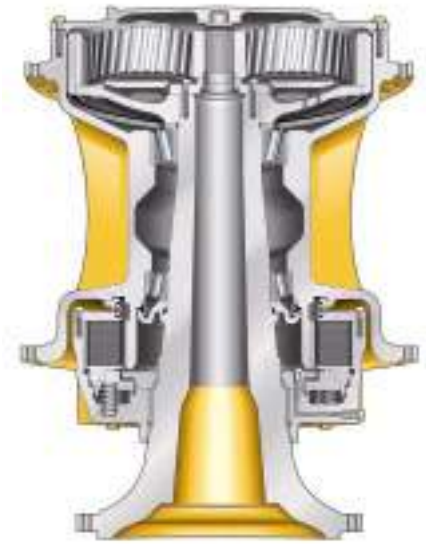

Full Hydraulic Service Brake. The 772 features a full hydraulic brake system, which offers significant improvements in reliability, response, control and serviceability versus an air-over hydraulic system. There are fewer components (part by part comparison), boosting reliability and streamlining maintenance.

Hydraulic Accumulators. The brake system is equipped with a primary accumulator and a secondary accumulator, which also provides back-up braking in the event of a failure. The accumulators automatically drain pressure after shutdown, reducing the service time by removing the need to drain the pressure off the system and reducing the risk of high-pressure exposure during maintenance.

The new brake system uses a pump that is driven off the flywheel 100 percent of the time and is only loaded when hydraulic pressure falls below 11 024 kPa (1,600 psi). The pump will cut out at 13 608 kPa (1,975 psi). In the new system, oil in this circuit is also sent to the hydraulic fan system. Any additional oil is sent to the brake cooling system along with the oil used in the drive fan.

Improved Reliability. Because oil is now used to actuate the brakes, Caterpillar has eliminated the need for two brake master cylinders, two relay valves, an air dryer and the retarder valve (found on ARC trucks only) that were associated with the air-over-hydraulic brake system. The air system had complexity, which affected its reliability. The oil actuated system is simpler and more reliable.

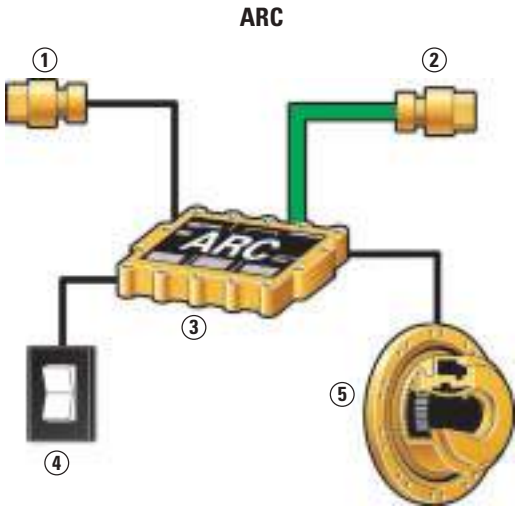

1 Service Brake Sensor
2 Engine Sensor
3 ARC
4 ARC Switch
5 Brakes
6 Service Brakes
7 Axle Speed Sensor
8 TCS

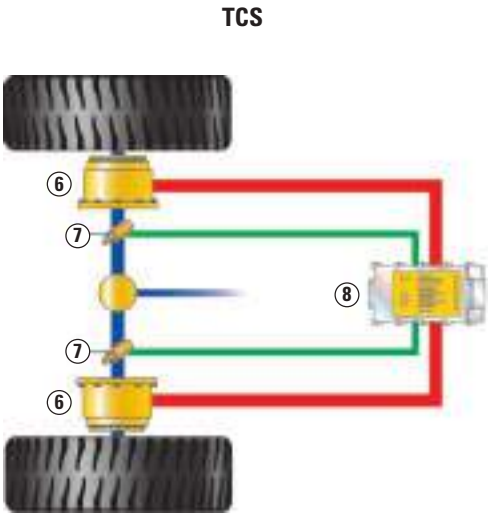

Pistons. The Caterpillar two-piece piston design combines the service, secondary, parking brake and retarding functions in the same system. The primary piston hydraulically actuates both service and retarding functions. The secondary piston is spring-applied and held in the disengaged position by hydraulic pressure. If hydraulic system pressure drops below a specified level, the spring-applied secondary piston automatically applies the brakes.

Parking Brake. Oil-cooled, spring-applied, hydraulically released parking brake is applied to the rear wheels for superior parking capability on all grades up to 15 percent.

Automatic Retarder Control (ARC). Standard ARC electronically controls braking on grade to maintain engine at approximately 1,900 rpm (adjustable from 1,850-1,950 rpm in increments of 10). ARC is deactivated when the operator applies the brakes or throttle.

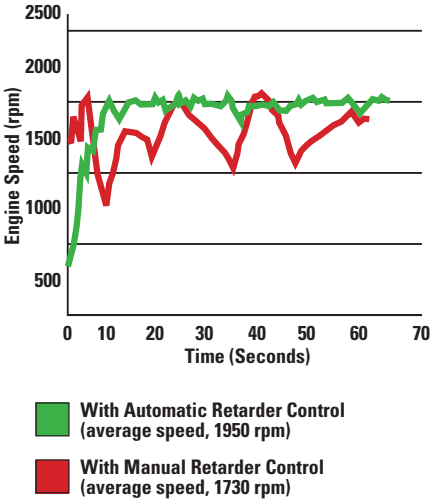

• **Faster Speeds.** ARC allows the operator to maintain optimum engine speeds for up to 15 percent faster downhill hauls and greater productivity.

• **Superior Control.** Automatic brake modulation offers a smoother ride and better control in slippery conditions, allowing the operator to concentrate on driving.

• **Ease of Operation.** ARC increases operating ease, resulting in greater operator confidence with less fatigue.

• **Engine Overspeed Protection.** Automatically activates ARC when engine speed exceeds factory preset levels, regardless of operator inputs, to avoid potentially damaging engine overspeeds.

Traction Control System (TCS) (Optional). Electronically monitors and controls rear wheel slippage for greater traction and enhanced truck performance in poor underfoot conditions. If slippage exceeds a set limit, the oil-cooled disc brakes engage to slow the spinning wheel. Torque is then automatically transferred to the wheel with better traction.

Compression Brake (Optional). Optional Compression Brake is integrated with Automatic Retarder Control (ARC) to provide up to 35 percent higher downhill travel speed and reduce wear on brake components.

Serviceability

Less time spent on maintenance means more time on the haul roads.

Ground-Level Access. All maintenance points have convenient ground level or platform access. Common engine service points are grouped on the right side of the engine for quick access. Two fuel filters come standard with the machine and the primary fuel filter includes a water separator. These filters are easy to change and are all spin-on/spin-off type.

Engine oil check and fill are accessed via the service platform. The newly designed engine oil dipstick is “rope-type” style, making daily checks easier for the operator.

Service Switches. Machine switches and an auxiliary start receptacle offer easier access and expanded capabilities. The battery disconnect switch, and auxiliary start receptacles are now combined into the same modular assembly and relocated for ground access.

Also, a new service panel on the LH front of the machine provides:

- **Engine Starter Lockout Switch.** Power is available to the machine, but it cannot be started.
- **Transmission, Hoist and Steering Lockout Switch.** The 772 features an all-new transmission, hoist and steering lockout mode. This feature disables the steering, hoist and transmission hydraulics, and sets the parking brake while the engine is running, allowing maintenance and trouble-shooting on the truck. The operator can use this feature to take S•O•S℠ analysis samples.
- **Electrical Breakers.** Ground-level access to circuit breakers are now provided for engine control, alternator and main electrical breakers.

Scheduled Oil Sampling. S•O•S℠ sampling valves speed sampling and analysis reliability.

Pressure Test Points. Disconnect valves are conveniently located throughout the hydraulic systems for easy pressure testing.

Air Filters. Radial seal air filters are easy to change, reducing time required for air filter maintenance.

Sealed Electrical Connectors. Electrical connectors are sealed to lock out dust and moisture. Harnesses are braided for protection. Wires are color-coded for easy diagnosis and repair.

Fuel Filters. The C18 engine is equipped with two fuel filters. The primary filter features 10-micron screening, and the secondary filter is 2-micron.

Oil Filter. The 772 has one engine oil filter on the right-hand side of the engine. This filter is located for easy serviceability. The oil filter is a 5-micron filter and features a 500-hour oil change interval.

Electrical Access. The 772 features a new configuration for fuses, circuit breakers and rear cab-mounted relays, enabling up to 50 percent faster servicing. A 12-Volt and 24-Volt power port are included. The automotive-style fuses, which replace the screw-in type, are all incorporated into a single enclosure that is easily accessible from inside the cab. 10-amp and 15-amp spare fuses are also included in the new design.

Cat Data Link. A Cat Data Link port located near the fuse panel in the cab can access all electronic controls for obtaining monitoring and diagnostic data. Excellent access to the ECM and electrical panels improves the ability to perform maintenance and trouble-shoot the cab electronics.

Cat ET. Cat ET service tool provides service technicians with easy access to stored diagnostic data through the Cat Data Link to simplify problem diagnosis and increase machine availability. Cat ET is beneficial because of how it displays the status of all engine parameters, including throttle position, timing and fuel flow. Critical data from the electronic engine and transmission controls, including transmission shifting, engine speed and fuel consumption, provides service technicians with enhanced diagnostic capability to reduce downtime and operating costs.

Lincoln's Quick Lube Automatic Lubrication (Optional). This advanced lubrication system is available as a factory installed option. This system provides optimal lubrication at preset intervals during machine operation significantly extends component life.

Clustered Grease Fittings (Optional). Clustered grease fittings save time as all lubrication points are mounted in three main locations.

Oil Dipstick. New "rope-type" oil dipstick improves serviceability by allowing easy daily checks.

QuickEvac™ System and Prelube System. Oil change labor time is reduced by as much as 50 percent with this standard on-board engine oil evacuation and pre-lube system. This system automatically fills engine oil filters and galleries, which ensures components are lubricated prior to starting the engine.

Extended Life Brake Discs (Optional). The extended life brake discs are made with a friction material that provides longer service life and increased heat resistance when compared to Caterpillar's standard brake offerings. Discs use an innovative carbon paper for braking and can be expected to double the life of standard paper friction material in most conditions. This is a significant step forward, especially in long, downhill-loaded hauling applications. The material is also twice as resistant to glazing, which is common during periods of high-temperature braking in moderate to severe operating conditions. Resistance to glazing leads to more consistent braking power.

Truck Body Systems

Cat designed and built for rugged performance and reliability in the toughest hauling applications.

Increased Body Capacities. The 772 body capacity at 31.3 m^3 (41.0 yd^3) has increased 14% over the 771D at 27.5 m^3 (36.0 yd^3). Payloads are based on 1660 kg per LCM (2,800 lb per LCY) material.

Electronic Hoist Control. Provides the operator with better control of the load when dumping, including over-center load control and modulated control throughout the operating range. The automatic body snubbing feature reduces impact on the frame, hoist cylinders and operator.

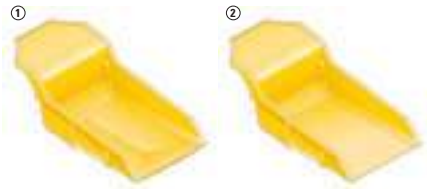

1) Dual Slope Body *2) Flat Floor Body*

Body Design. The new dual slope and flat floor body systems will continue to use fully fabricated, mild steel structures, offering a strong, yet weldable underbody structure. All interior, steel body surfaces that come in contact with material are fabricated from 400 BHN steel to provide superior wear characteristics and resistance to impact. Wide box-section ribs provide excellent durability and impact support in the floor, front-wall, sidewall, and top rail areas. Full-length stringer rails enhance strength and rigidity throughout the body. Other new features that further enhance durability of the understructure include:

- Sidewall ribs are integrated into the floor ribs, forming a belt to provide increased strength in the sidewalls.
- Underbody ribs are increased from seven to nine, enhancing the underbody structural support.
- Front wall body rest supports are integrated into the front wall structure for enhanced durability.
- Full-length, single-piece stringer rails are used, improving the structural support in the body, especially in the body pivot support area.
- Front wall is 400 BHN and the thickness is increased from 10.2 mm (0.4 in) to 16.0 mm (0.63 in), eliminating the need for additional liners for impact resistance in most applications.

Application Specific Body Systems. With the introduction of the next generation of trucks, Caterpillar will build on the previous strengths and provide differentiation through six different body systems. Both dual slope and flat floor bodies will be available in the following configurations:

- Low Impact, Steel Body System
- Medium Impact, Steel Body System
- High Impact, Steel Body System
- Heavy Duty Impact, Steel Body System
- High Impact, Rubber Body System
- Heavy Duty High Impact, Rubber Body System

Steel-Lined Body System. The traditional steel-lined system is well understood by users worldwide. In the new 772 steel body system, the unique design allows the floor and liner to work together to provide the impact and wear resistance. The Medium Impact, Steel Body System offers an optimum combination of wear and impact resistance, while maximizing performance. If the application dictates higher impact or wear needs, the High Impact, Steel Body System or the Heavy Duty, High Impact, Steel Body System provides more impact and wear resistance, but at an increase in body weight versus the Medium Impact, Steel Body System.

Rubber-Lined Body System. A new offering available from the factory is the rubber-lined body system. For impact resistance in hard-rock applications, rubber liners offer a practical, durable and cost-effective solution. They dissipate impact energy, maximizing body life and reduce noise, improving job site work conditions inside and outside the cab. These maintenance-free liners also require minimal installation time.

The density of rubber is 20 percent of the density of steel, yet its ability to absorb impact is three times that of steel. This gives rubber a high impact strength-to-weight ratio. In addition, truck operators enjoy a better operator environment, without the hard impacts felt during loading.

Body System Selection. Two primary factors affect body selection:

• **Impact.** Impact is the energy that is created by the material when it hits the truck body. The condition and size of material, combined with the height at which it is dropped, greatly determines the impact energy that the body must absorb. The most measurable effect of impact is structural bending, chipping, cracking, and spalling. These conditions can be created when the impact absorption capability is exceeded by the impact of the material itself. Generally speaking, a high impact material might be basalt or granite. A medium impact material might be mixture of decomposed rock (75 percent rock, 25 percent dirt), while a low impact material might simply be dry, packed dirt.

• **Abrasion or Wear.** The tendency of a material to grind away the surface of a body by means of friction is abrasion. Abrasion occurs when a material's hardness is higher than the wear surface that it slides on. A high abrasion material could be any rock material containing a high proportion of hard, angular minerals such as quartz. Granite tends to be highly abrasive. A moderate abrasion material might contain a high proportion of minerals such as calcite. Limestone is most likely in the moderately abrasive category. A low abrasion material could be any material that contains minerals such as talc.

Exhaust Routing. There are three exhaust routing systems available for the 772, depending on the customer's requirements for body heat and sound:

• **Full-Time Body Routing.** The standard design provides full-time routing of exhaust into the body to heat areas where material gathers. This plays a crucial role in preventing material from being retained in the body during dumping. Not for use with rubber liner body systems.

• **Full-Time Muffler Routing.** The second option is the full-time routing of exhaust through a muffler, which eliminates exhaust in the body. This option should be used for rubber-lined bodies or applications that do not require body heat.

• **Diverter Box Routing.** The final option provides a diverter box so that the customer has the flexibility to choose whether to route the exhaust through the body or directly to the outside. Both options go through the muffler. Not for use with rubber liner body systems.

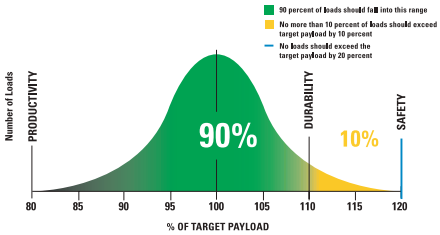

Target Payload Strategy. Your Caterpillar Dealer can help you manage to target payload to maximize equipment use, ensure safe operation, increase productivity and lower cost-per-ton.

- Underloading increases costs due to lost payloads, underutilizes equipment, and increases cost-per-ton.
- Overloading causes excessive wear on vehicle components, such as brakes, tires and drive train, reducing component life and increasing maintenance costs and repairs.

Matched Systems. Designed to work as an optimum pass/match system, the 772 is best sized to match the 988H Wheel Loader, with a 4 pass/match, the 990H Wheel Loader with 3 pass/match, and the 385C Hydraulic Excavator with a 6 pass/match.

Information and Monitoring Systems

Vital machine health and payload data keeps the 772 performing at peak production levels.

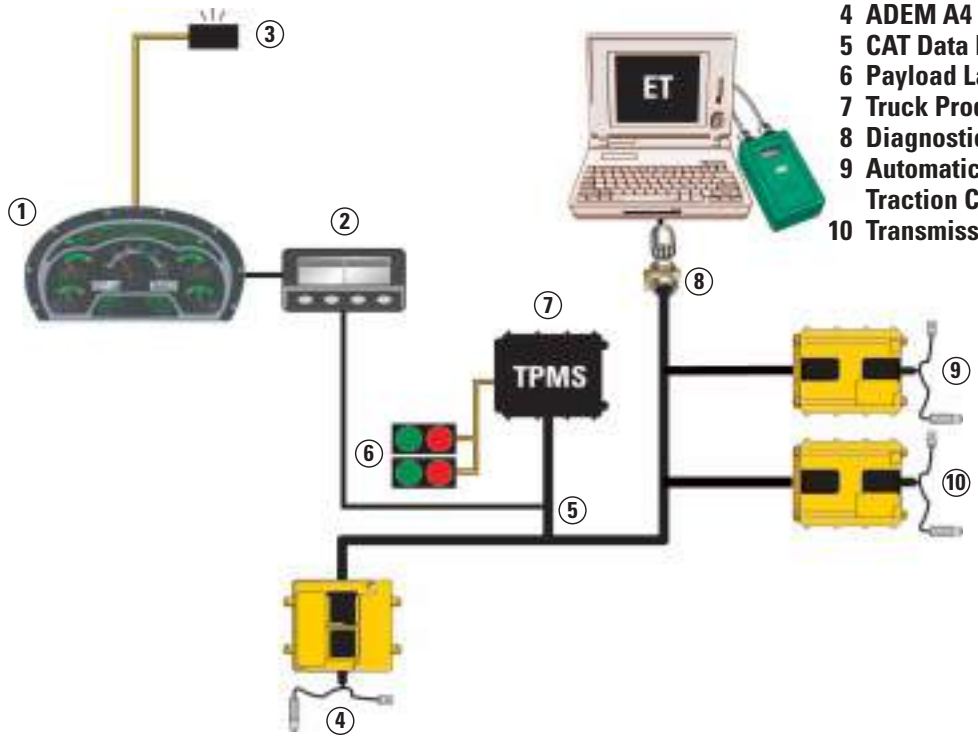

1 Gauge Cluster
2 Messenger Display
3 Action Alarm
4 ADEM A4 Engine Control Module
5 CAT Data Link
6 Payload Lamps
7 Truck Production Management System
8 Diagnostic Connector (ET)
9 Automatic Retarder Control (ARC) and Traction Control System (TCS)
10 Transmission/Chassis Control (TCC) Module

New Features.

- Standard Messenger Display replaces Caterpillar Electronic Monitoring System (CEMS) unit.
- Enhanced TPMS (Optional Attachment) incorporates second gear weighing capability and increases to 2,400 cycles of data storage for analysis.

Cat Messenger. Standard on the 772, Cat Messenger provides real-time machine performance and operating data, and basic trip, maintenance and diagnostic data using an LCD display. The viewable LCD screen area of the Messenger display is 22.5 mm × 84.6 mm (0.89 in × 3.33 in).

Service Mode. This allows a technician to change machine settings that are typically changed via Cat ET through the display. Service Mode can be a password-protected feature to inhibit the operator from changing these settings. Settings that can be changed via Service Mode are:

- Top Gear Limit
- Body Up Gear Limit
- Machine Overloaded Speed Limit (if TPMS is installed)
- Machine Speed Limit
- Economy Shift Mode
- Desired Engine Retard Speed
- Target Payload (if TPMS is installed)
- Payload Overload Limit (if TPMS is installed)

Real Time System Parameter Display. This will show a real-time display of various machine parameters related to the engine, transmission, hoist, brake and TPMS (if installed) systems.

• **System Tests.** The technician can perform a transmission stall test and a monitoring system self test.

• **Machine Functionality.** Records and displays worst-case values for brake, hoist and hydraulic fan oil temperature, engine coolant temperature, tachometer, transmission/torque converter temperature, and fuel level since the last reset.

• **System Information.** Displays electronic system information such as the ECM part number, the software part number and the software release date.

• **Supports Multiple Languages.** Available in 47 languages. Please consult with your salesman as to specific language availability.

• **Payload Calibration.** (if TPMS is installed)

Truck Production Management System (TPMS) (Optional). TPMS provides valuable payload and cycle time data to improve productivity.

- Uses strut pressure sensors and on-board microprocessor to determine payload weight.
- Delivers consistent, accurate payloads and improves efficiency by minimizing overloading and underloading.
- External lights signal loading tool operator when payload is reached.
- On-board computer stores up to 2,400 cycles for analysis of payload weight, cycle times, distances and actual cycle dates and times.
- A second gear reweigh takes an additional measurement once the truck has reached second gear for improved accuracy.
- System is accurate within ± 5 percent under normal loading conditions over a normal shift.
- Standard LED lamps replace incandescent lamps on the TPMS, extending lamp life by 25 times.

Product Link. Using satellite technology, this optional wireless system automatically reports information, including vital machine health data, to Cat dealers and customers via e-mail or pager. It can streamline diagnostic efforts, downtime, and maintenance scheduling and costs. The standard configuration of the 772 is Product Link (Level 1) ready. Product Link PL321SR (Level 3) is offered as a standard factory-installed attachment.

Equipment Manager (Optional). Product Link data can be delivered to a customer's desktop via this on-line, user-friendly subscription service. Information is organized and color-coded according to priority. There are four levels of Equipment Manager service available:

• **Asset Watch.** Provides alerts, location and fuel levels and machine start and stop times.

• **Maintenance Watch.** Provides all Asset Watch data, plus repair and maintenance information, such as PM maintenance due or past due, and PM maintenance history.

• **Health Watch.** Provides all Maintenance Watch data, and adds machine fault information, performance trending and S•O•S oil analysis reporting with interpretation tools.

• **Utilization and Productivity Watch.** Offers comprehensive customized usage and monitoring reports.

Safety

Caterpillar machines and systems are designed with safety as the first priority.

Product Safety. Caterpillar has been and continues to be proactive in developing machines that meet or exceed safety standards. Safety is an integral part of all machine and systems designs.

Integral ROPS Cab. Resiliently mounted to the frame to reduce vibration and sound, the integral ROPS structure, which provides “five-sided protection” for the operator, is designed as an extension of the truck frame.

Payload Guidelines. Safety is integral to maintaining the highest productivity in mining machine operation. The Caterpillar 10/10/20 Payload Guidelines ensures that steering and braking systems have sufficient capacity to perform.

WAVS Camera (Optional). An optional rear vision camera system provides visibility to the rear of the machine through an LCD monitor in the cab. The monitor an be set to activate only when the truck is in reverse, and the display is equipped with a sensor to detect ambient light, which automatically brightens or dims the display.

Brake Systems. Cat hydraulically controlled dry front and rear oil-cooled multiple disc brakes provide exceptional, fade-resistant braking and retarding for maximum performance and productivity in all haul-road conditions. The service brakes and retarding system are actuated by modulated hydraulic pressure, while secondary and parking brake functions are spring applied and hydraulic released. This reliable and durable system ensures braking in the event of complete hydraulic failure.

Steering System. A twin, double-acting cylinder steering system is designed to deliver precise control under all loading and underfoot conditions. The steering hydraulic system is separate from the main hydraulic system to prevent crosscontamination and overheating.

Engine Shutoff Switch. A secondary engine shutoff switch is located at ground level.

Electrical System Disconnect. A battery disconnect switch, located directly above the front bumper, provides ground-level lockout of the electrical system.

Ladder/Secondary Egress. Wide stationary stairways and platforms on both sides of the machine, allow easy ingress and egress.

Standard Safety Features.

- Slip resistant surfaces
- 75 mm (3 in) wide three-point operator restraint
- Heated, wide-angle mirrors
- Body raised indicator
- Guard rails
- Reverse neutralizer when dumping
- Low interior sound level
- Service platform level transmission, hoist and steering disable switch
- Service platform level starter disable switch

Customer Support

Caterpillar® dealers have what it takes to keep trucks productive.

Commitment Makes the Difference. Cat® dealers offer a wide range of solutions, services and products that help you lower costs, enhance productivity and manage your operation more efficiently. Support goes far beyond parts and service. From the time you select a piece of Cat equipment until the day you rebuild, trade or sell it, the support you get from your Cat dealer makes the difference that counts.

Dealer Capability. Cat dealers provide the level of support you need, on a global scale. Dealer expert technicians have the knowledge, experience, training and tooling necessary to handle your repair and maintenance needs, when and where you need them.

Product Support. Cat dealers believe superior products deserve superior support. When Cat products reach the field, they are supported by a worldwide network of parts distribution facilities, dealer service centers, and technical training facilities to keep your equipment up and running. Cat customers rely on prompt, dependable parts availability and expertise through our global dealer network, ready to meet your needs 24/7.

Service Support. Every piece of Cat equipment is designed and built to provide maximum productivity and operating economy throughout its working life. Cat dealers offer a wide range of service plans that will maximize uptime and return on your investment, including:

- Preventive Maintenance Programs
- Diagnostic Programs, such as Scheduled Oil Sampling and Technical Analysis
- Rebuild and Reman Options
- Customer Support Agreements

Application Awareness. Operating and maintenance costs are influenced by many application and site-specific factors, such as material density, loading position, payload, grades, speeds, haul road design and maintenance. To optimize total cost of ownership and productivity, your Cat dealer can provide you with a fundamental understanding of the effects application characteristics and operating techniques have on maintenance and operating costs.

Operation. With today's complex products, equipment operators must have a thorough understanding of machine systems and operating techniques to maximize efficiency and profitability. Your Cat dealer can arrange training programs to help operator's improve productivity, decrease downtime, reduce operating costs, enhance safety, and improve return on the investment you make in Cat products.

www.cat.com. For more complete information on Cat products, dealer services, and industry solutions, visit us on the web at www.cat.com.

Engine

Engine Model	Cat® C18 ACERT™	
Rated Engine Speed	1,800 rpm	
Gross Power – SAE J1995	446 kW	598 hp
Net Power – SAE J1349	399 kW	535 hp
Net Power – ISO 9249	399 kW	535 hp
Net Power – ISO 9249:1997	399 kW	535 hp
Net Power – 80/1269/EEC	399 kW	535 hp
Number of Cylinders	6	
Peak Torque	2696 N•m	1,988 lb-ft
Bore	145 mm	5.7 in
Stroke	183 mm	7.2 in
Displacement	18.1 L	1,105 in^3

- Power rating applies at 1,800 rpm when tested under the specified condition for the specified standard.
- Ratings based on SAE J1995 standard air conditions of 25° C (77° F) and 100 kPa (29.61 Hg) barometer. Power based on fuel having API gravity of 35 at 16° C (60° F) and an LHV of 42 780 kJ/kg (18,390 BTU/lb) when engine used at 30° C (86° F).
- No engine derating required up to 2286 m (7,500 ft) altitude.
- Compliant with U.S. Environmental Protection Agency Tier 3 emissions standards and European Union Stage IIIa regulations.

Weights – Approximate

Target Gross Machine Operating Weight	82 100 kg	181,000 lb
Chassis Weight	25 025 kg	55,171 lb
Body Weight	10 425 kg	22,984 lb

- Chassis weight with 10% fuel, hoist, body mounting group, rims and tires.
- Body weight varies depending on how body is equipped. Shown above is the Flat Floor, Medium Impact, Steel Body System.

Operating Specifications

Nominal Payload Class	45 tonnes	50 tons
Top Speed – Loaded	79.7 km/h	49.5 mph
Body Capacity – SAE 2:1	31.3 m^3	41 yd^3
Target Payload Capacity	45 tonnes	50 tons

- Refer to the Caterpillar 10/10/20 Overload Policy for maximum gross machine weight limitations.
- Capacity with flat floor body.

Transmission

Forward 1	12.9 km/h	8 mph
Forward 2	17.7 km/h	11 mph
Forward 3	24 km/h	14.9 mph
Forward 4	32.2 km/h	20 mph
Forward 5	43.6 km/h	27.1 mph
Forward 6	58.7 km/h	36.5 mph
Forward 7	79.7 km/h	49.5 mph
Reverse	16.9 km/h	10.5 mph

- Maximum travel speeds with standard 21.00R33 (E4) tires.

Final Drives

Differential Ratio	2.74:1
Planetary Ratio	4.80:1
Total Reduction Ratio	13.15:1

Brakes

Brake Surface – Front	1395 cm^2	216 in^2
Brake Surface – Rear	50 284 cm^2	7,794 in^2
Brake Standards	ISO 3450: 1996	

- Target Gross Machine Operating Weight is up to 82 100 kg (181,000 lb).

Body Hoists

Pump Flow – High Idle	515 L/min	136 gal/min
Relief Valve Setting – Raise	17 255 kPa	2,500 psi
Relief Valve Setting – Lower	3450 kPa	500 psi
Body Raise Time	8.1 Seconds	
Body Lower Time – Float	14.7 Seconds	
Body Power Down – High Idle	14.3 Seconds	

* Without Sound Suppression Package

Capacity – Dual Slope – 100% fill factor

Struck	24.2 m^3	31.7 yd^3
Heaped 2:1 (SAE)	31.2 m^3	40.8 yd^3

Capacity – Flat Floor – 100% fill factor

Struck	23.3 m^3	30.5 yd^3
Heaped 2:1 (SAE)	31.3 m^3	41 yd^3

Weight Distributions – Approximate

Front Axle – Empty	48%
Front Axle – Loaded	33%
Rear Axle – Empty	52%
Rear Axle – Loaded	67%

Suspension

Effective Cylinder Stroke – Front	234 mm	9.2 in
Effective Cylinder Stroke – Rear	149 mm	5.9 in
Rear Axle Oscillation	5.4°	

Service Refill Capacities

Fuel Tank	530 L	140 gal
Cooling System	114 L	30 gal
Crankcase	60 L	16 gal
Differentials and Final Drives	83 L	22 gal
Steering Tank	34 L	9 gal
Steering System (Includes Tank)	56 L	15 gal
Brake/Hoist/Fan Hydraulic Tank	155 L	35 gal
Brake/Hoist/Fan System (Tank)	277 L	73 gal
Transmission/Torque Converter Sump	53 L	14 gal
Transmission/Torque Converter System (Includes Sump)	72 L	19 gal

Tires

Standard Tire	21.00R33 (E4)

- Productive capabilites of the 772 truck are such that, under certain job conditions, TKPH (TMPH) capabilities of standard or optional tires could be exceeded and, therefore, limit production.
- Caterpillar recommends the customer evaluate all job conditions and consult the tire manufacturer for proper tire selection.

ROPS

ROPS/FOPS Standards

- ROPS (Rollover Protective Structure) for cab offered by Caterpillar meets ISO 3471:1994 ROPS criteria.
- FOPS (Falling Objects Protective Structure) meets ISO 3449:1992 Level II FOPS criteria.

Sound

Sound Standards

- The operator sound pressure level measured according to work cycle procedures specified in ANSI/SAE J919 APR95 is 79 dB(A) for cab offered by Caterpillar, when properly installed and maintained and tested with doors and windows closed, engine speed at high idle, and fan at medium settings.
- The exterior sound pressure level for the standard machine measured at a distance of 15 m (49 ft) according to the test procedures specified in SAE J88 APR95, mid-gear moving operation is 84 dB(A).
- Hearing protection may be needed when operating with an open operator station and cab (when not properly maintained or doors/windows open) for extended periods or in a noisy environment.

Steering

Steering Standards	ISO 5010:1992
Steer Angle	36°

- Target Gross Machine Operating Weight is 82 100 kg (181,000 lb).

Dimensions

All dimensions are approximate.

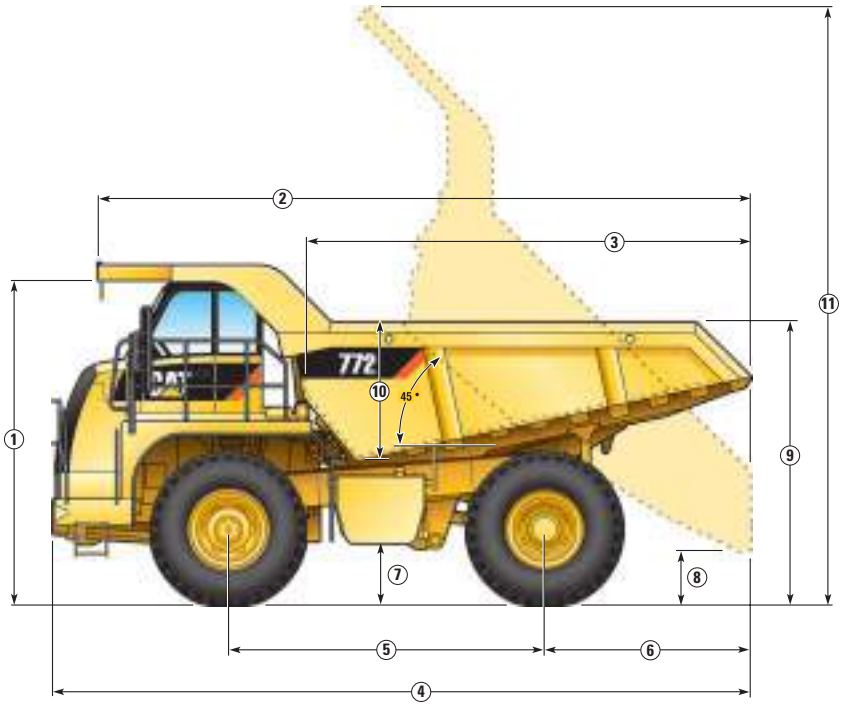

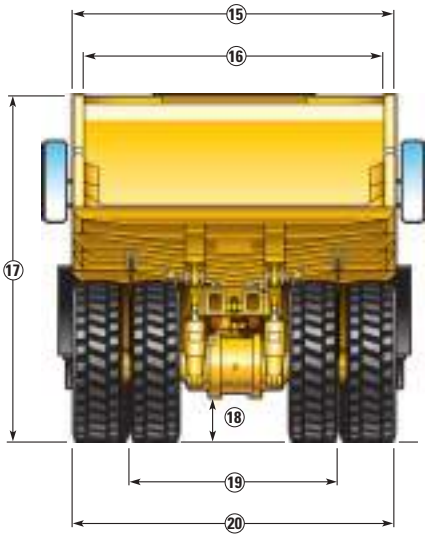

1	Height to Top of ROPS	4093 mm	13 ft 6 in
2	Overall Body Length	8172 mm	26 ft 10 in
3	Inside Body Length	5549 mm	18 ft 3 in
4	Overall Length	8740 mm	28 ft 9 in
5	Wheelbase	3960 mm	13 ft 0 in
6	Rear Axle to Tail	2590 mm	8 ft 6 in
7	Ground Clearance	720 mm	2 ft 5 in
8	Dump Clearance	495 mm	1 ft 8 in
9	Loading Height – Empty	3499 mm	11 ft 6 in
10	Inside Body Depth – Max	1706 mm	5 ft 8 in

11	Overall Height – Body Raised	8357 mm	27 ft 5 in
12	Operating Width	4751 mm	15 ft 8 in
13	Centerline Front Tire Width	3165 mm	10 ft 5 in
14	Engine Guard Clearance	714 mm	2 ft 5 in
15	Outside Body Width	3952 mm	13 ft 0 in
16	Inside Body Width	3698 mm	12 ft 2 in
17	Front Canopy Height	4216 mm	13 ft 10 in
18	Rear Axle Clearance	560 mm	1 ft 11 in
19	Centerline Rear Dual Tire Width	2652 mm	8 ft 9 in
20	Overall Tire Width	3927 mm	12 ft 11 in

Weight/Payload Calculation

(Example)

Flat Floor

	Low Impact Steel Body System 8 mm (0.315 in)	Medium Impact Steel Body System 16 mm (0.630 in)	High Impact Steel Body System 20 mm (0.787 in)	Heavy Duty Steel Body System 25 mm (1.0 in)	High Impact Rubber Body System 102 mm (4.0 in)	Heavy Duty Rubber Body System 102 mm (4.0 in)
Target Gross Machine Weight* kg (lb)	82 100 (181,000)	82 100 (181,000)	82 100 (181,000)	82 100 (181,000)	82 100 (181,000)	82 100 (181,000)
Empty Chassis Weight* kg (lb)	25 025 (55,171)	25 025 (55,171)	25 025 (55,171)	25 025 (55,171)	25 025 (55,171)	25 025 (55,171)
Body System Weight kg (lb)	8564 (18,881)	10 439 (23,013)	10 910 (24,053)	11 982 (26,415)	11 164 (24,612)	11 617 (25,612)
Empty Machine Weight kg (lb)	33 589 (74,052)	35 463 (78,184)	35 935 (79,224)	36 208 (81,586)	36 189 (79,783)	36 643 (80,783)
Attachments						
Fuel Tank Size L (gal)	529 (140)	529 (140)	529 (140)	529 (140)	529 (140)	529 (140)
Fuel Tank – 100% fill kg (lb)	445 (983)	445 (983)	445 (983)	445 (983)	445 (983)	445 (983)
Empty Operating Weight** kg (lb)	34 035 (75,035)	35 910 (79,167)	36 381 (80,207)	37 453 (82,569)	36 635 (80,766)	37 088 (81,766)
Target Payload* kg (lb)	48 064 (105,965)	46 191 (101,833)	45 719 (100,793)	44 648 (98,431)	45 465 (100,234)	45 012 (99,234)
Target Payload* tonnes (tons)	48.1 (53.0)	46.2 (50.9)	45.7 (50.4)	44.6 (49.2)	45.5 (50.1)	45.0 (49.6)

Dual Slope

	Low Impact Steel Body System 8 mm (0.315 in)	Medium Impact Steel Body System 16 mm (0.630 in)	High Impact Steel Body System 20 mm (0.787 in)	Heavy Duty Steel Body System 25 mm (1.0 in)	High Impact Rubber Body System 102 mm (4.0 in)	Heavy Duty Rubber Body System 102 mm (4.0 in)
Target Gross Machine Weight* kg (lb)	82 100 (181,000)	82 100 (181,000)	82 100 (181,000)	82 100 (181,000)	82 100 (181,000)	82 100 (181,000)
Empty Chassis Weight* kg (lb)	25 025 (55,171)	25 025 (55,171)	25 025 (55,171)	25 025 (55,171)	25 025 (55,171)	25 025 (55,171)
Body System Weight kg (lb)	8564 (18,880)	10 413 (22,956)	10 913 (24,059)	11 969 (26,386)	11 226 (24,749)	11 643 (25,669)
Empty Machine Weight kg (lb)	33 589 (74,051)	35 438 (78,127)	35 938 (79,230)	36 994 (81,557)	36 251 (79,920)	36 668 (80,840)
Attachments						
Fuel Tank Size L (gal)	529 (140)	529 (140)	529 (140)	529 (140)	529 (140)	529 (140)
Fuel Tank – 100% fill kg (lb)	445 (983)	445 (983)	445 (983)	445 (983)	445 (983)	445 (983)
Empty Operating Weight** kg (lb)	34 035 (75,034)	35 884 (79,110)	36 384 (80,213)	37 440 (82,540)	36 697 (80,903)	36 869 (81,823)
Target Payload* kg (lb)	48 064 (105,966)	46 217 (101,890)	45 716 (100,787)	44 661 (98,460)	45 403 (100,097)	44 986 (99,177)
Target Payload* tonnes (tons)	48.1 (53.0)	46.2 (50.9)	45.7 (50.4)	44.6 (49.2)	45.4 (50.0)	45.0 (49.6)

* Refer to Caterpillar 10/10/20 overload policy
** Includes weight of all attachments

Gradeability/Speed/Rimpull

To determine gradeability performance: Read from gross weight down to the percent of total resistance. Total resistance equals actual percent grade plus 1% for each 10 kg/t (20 lb/ton) of rolling resistance. From this weight-resistance point, read horizontally to the curve with the highest obtainable gear, then down to maximum speed. Usable rimpull will depend upon traction available and weight on drive wheels.

Direct Drive
Torque Converter Drive
E – Typical Field Empty Weight
L – Target Gross Machine Operating Weight 82 100 kg (181,000 lb)

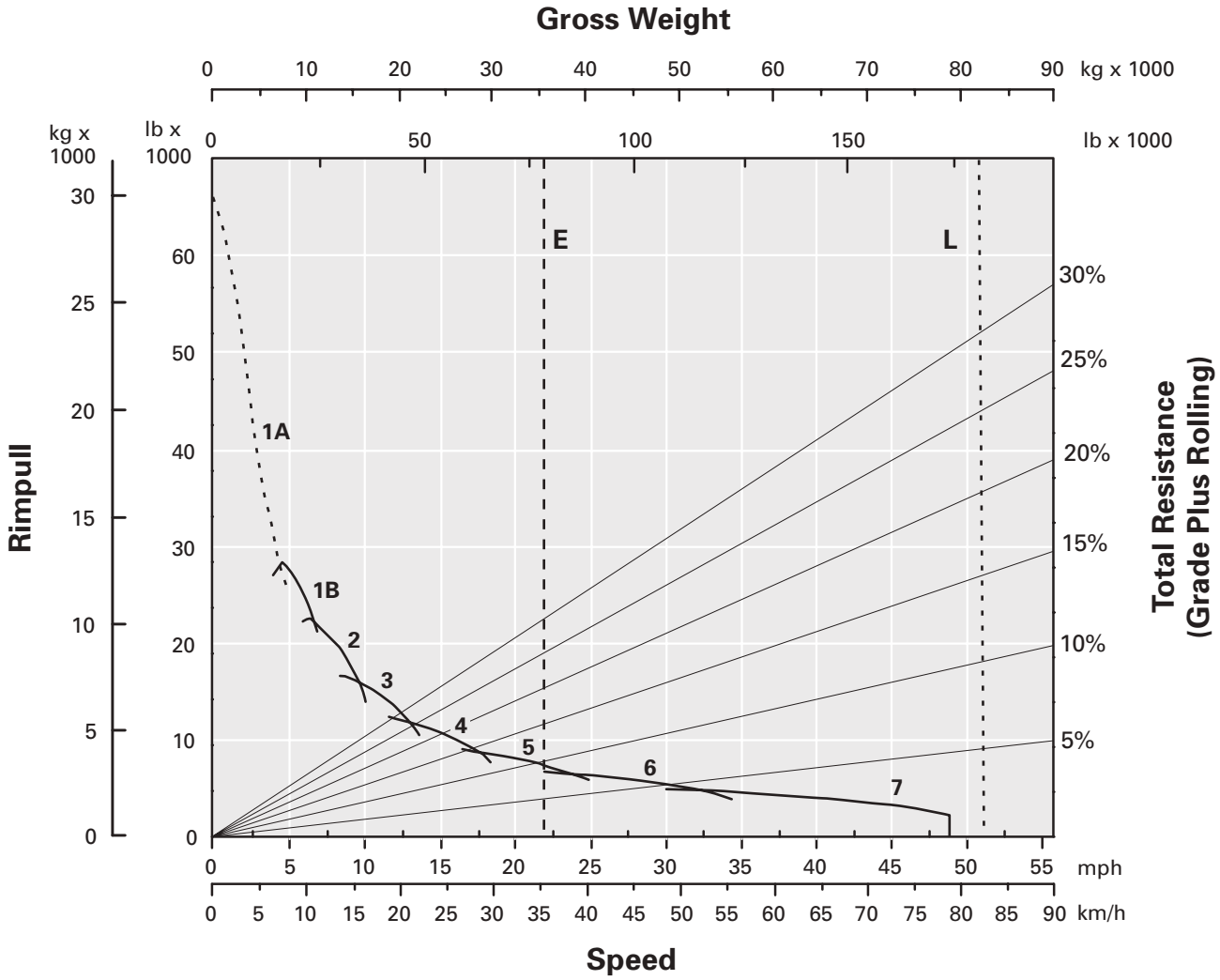

Retarding Performance

To determine retarding performance: Add lengths of all downhill segments and, using this total, refer to proper retarding chart. Read from gross weight down to the percent effective grade. Effective grade equals actual % grade minus 1% for each 10 kg/t (20 lb/ton) of rolling resistance. From this weight-effective grade point, read horizontally to the curve with the highest obtainable gear, then down to maximum descent speed brakes can properly handle without exceeding cooling capacity. The following charts are based on these conditions: 32° C (90° F) ambient temperature, at sea level, with 21.00 R33 tires.

NOTE: Select the proper gear to maintain engine rpm at the highest possible level, without overspeeding the engine. If cooling oil overheats, reduce ground speed to allow transmission to shift to the next lower speed range.

With ARC Only
ARC and Engine Brake
E – Typical Field Empty Weight
L – Target Gross Machine Operating Weight 82 100 kg (181,000 lb)

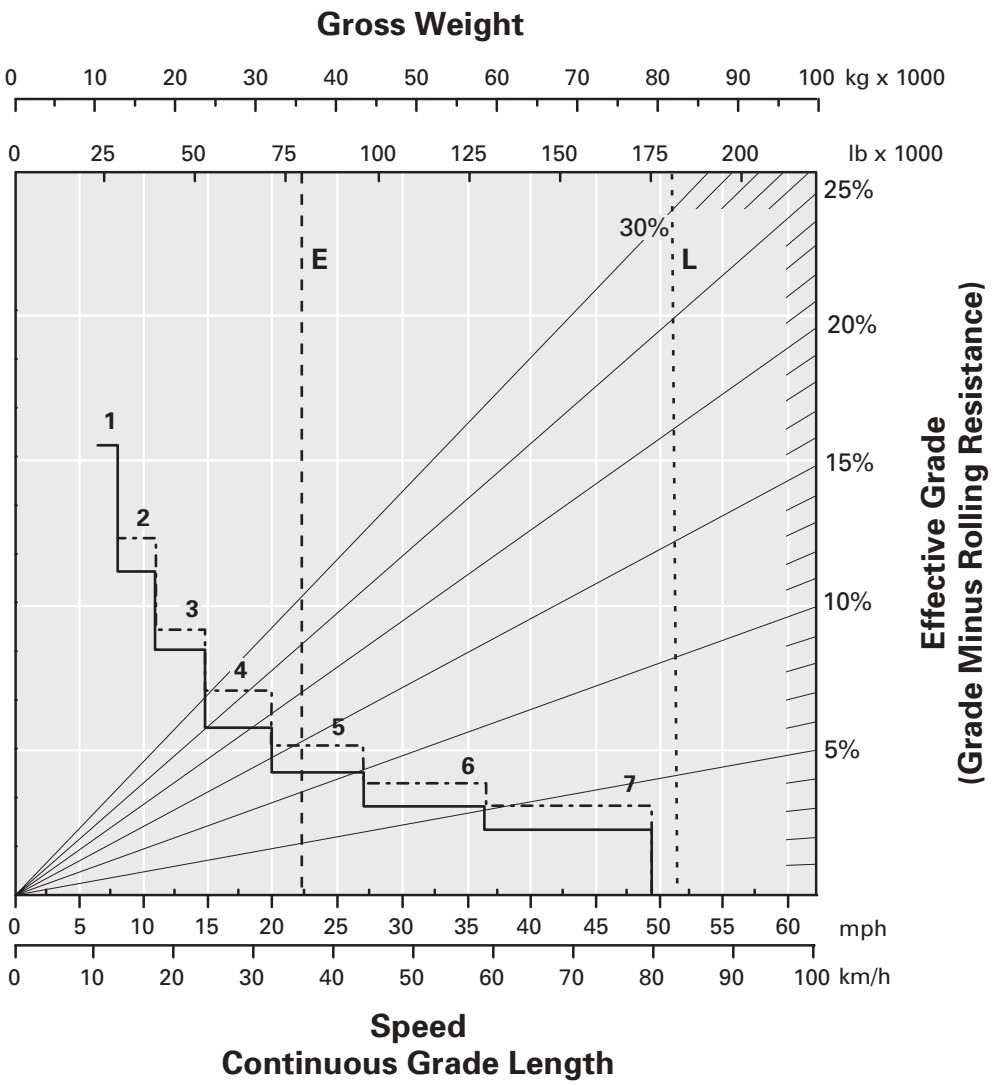

Retarding Performance

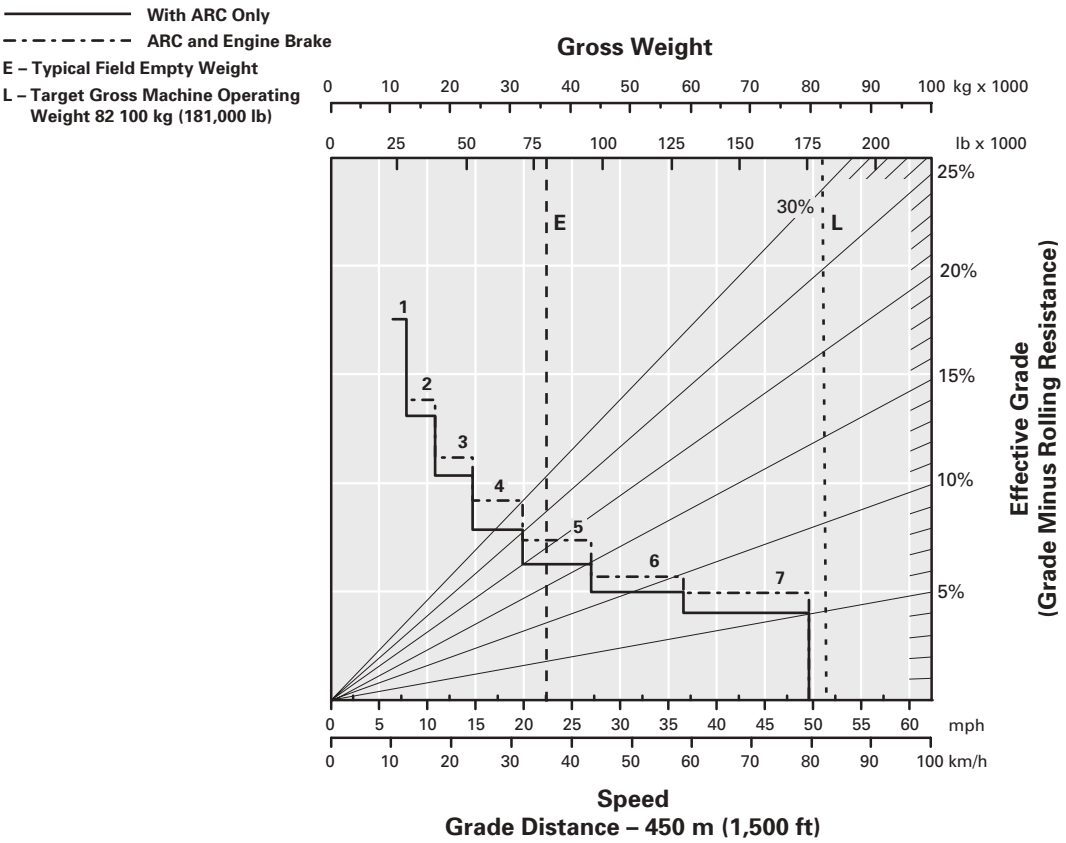

Grade Distance – 450 m (1,500 ft)

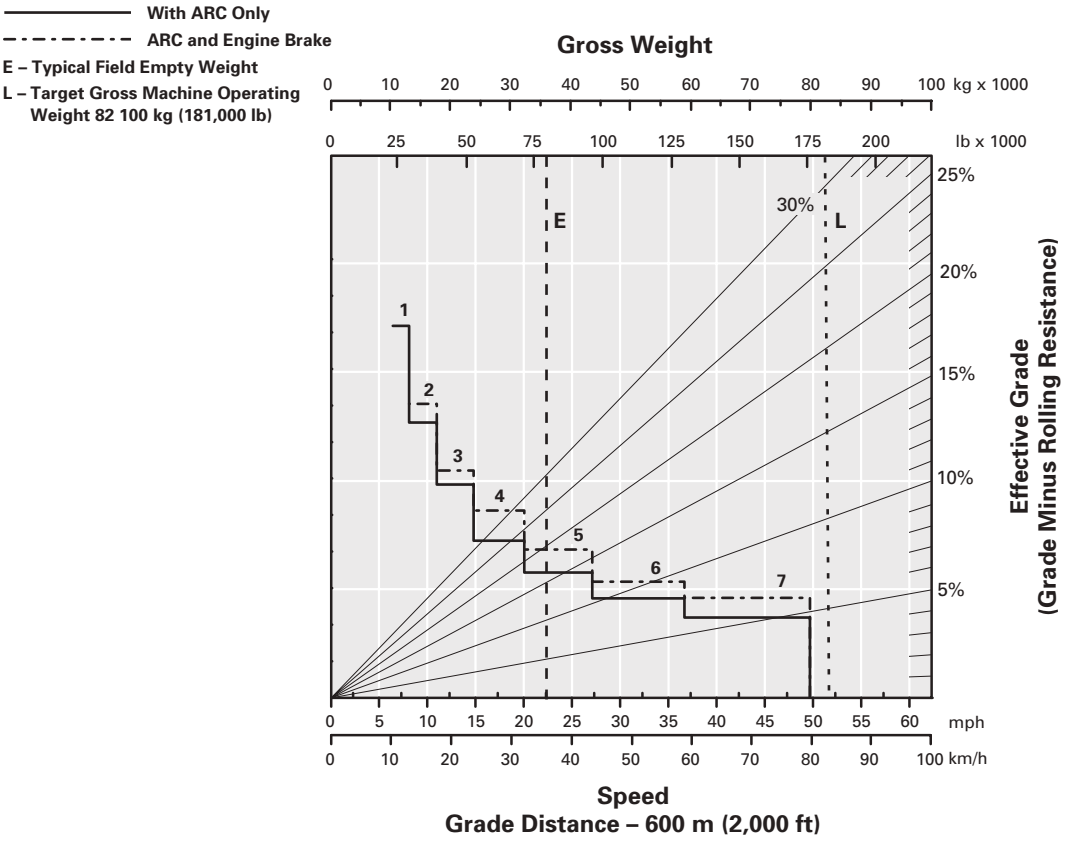

Grade Distance – 600 m (2,000 ft)

Retarding Performance

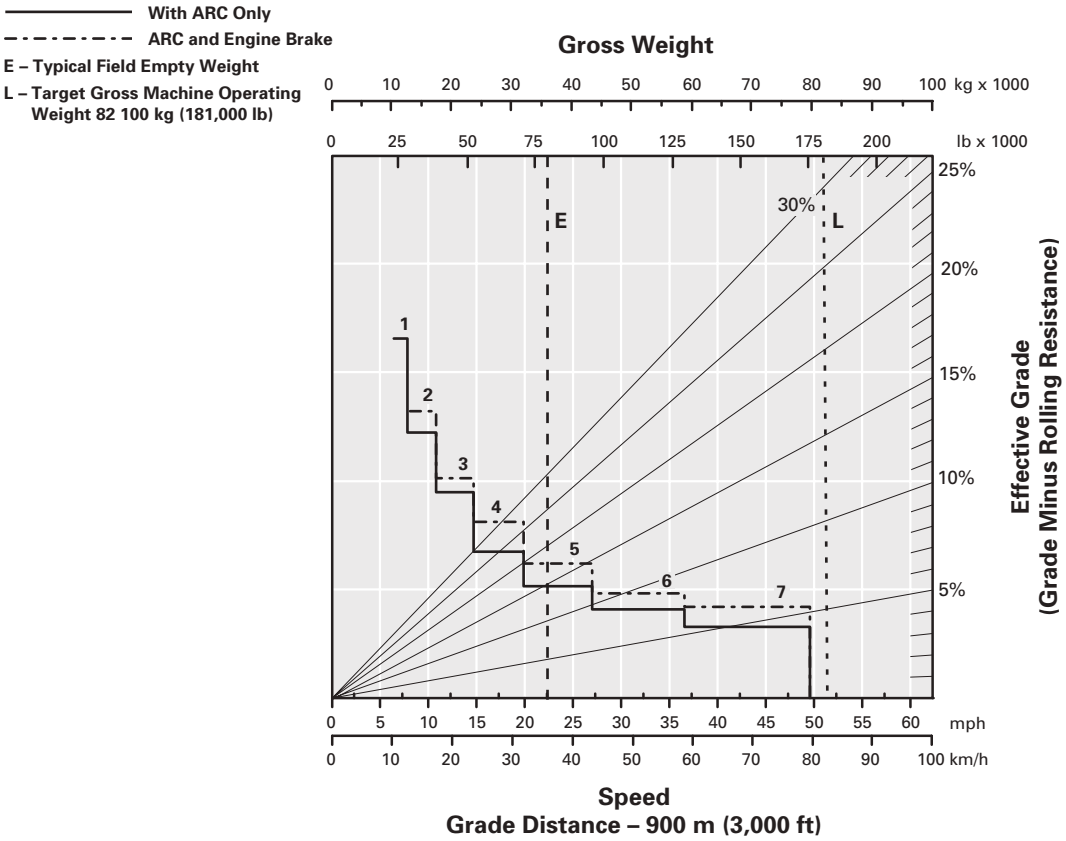

Grade Distance – 900 m (3,000 ft)

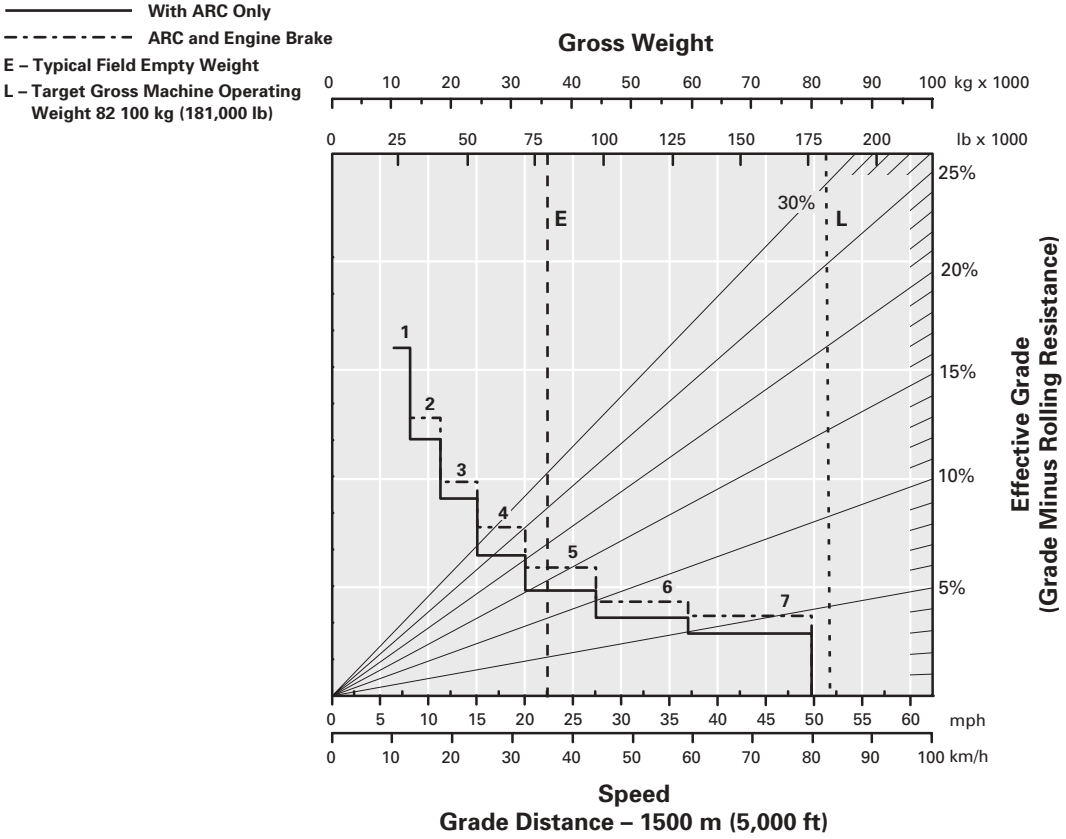

Grade Distance – 1500 m (5,000 ft)

Standard Equipment

Standard equipment may vary. Consult your Caterpillar dealer for details.

OPERATOR ENVIRONMENT
- Air conditioning
- Ashtray and cigarette lighter
- Coat hook
- Cup holders (4)
- Diagnostic connection port, 24V
- Entertainment Radio Ready
  - 5 amp converter
  - Speakers
  - Antenna
  - Wiring harness
- Gauges/indicators:
  - Air cleaner service indicator – electronic
  - Brake oil temperature gauge
  - Coolant temperature gauge
  - Engine overspeed indicator
  - Fuel level
  - Hour meter
  - Speedometer/odometer
  - Tachometer
  - Transmission gear indicator
- Heater/defroster, 11.070 kCal (43,930 BTU)
- Hoist lever
- Horn, electric
- Light, dome/courtesy
- Messenger display unit
- Mirrors
- Power port, 12V
- ROPS cab, insulated/sound suppressed
- Seat, Caterpillar Comfort
  - Full air suspension
  - Retractable, 3-point seat belt with shoulder harness
- Seat, training with lap belt
- Steering wheel, padded, tilt and telescopic
- Storage compartment
- Sun visor, tinted glass
- Throttle lock
- Windshield wiper (intermittent) and washer

POWER TRAIN
- Cat C18 Engine with ACERT® Technology
  - 6-cylinder diesel
  - Air-to-Air Aftercooler (ATAAC)
  - Air cleaner with precleaner (1)
  - Automatic cold mode idle control
  - Electric start
  - Quick Evac™ System with engine prelube
  - Turbocharger
- Braking system:
  - Automatic Retarder Control (ARC) (utlizes rear oil-cooled brakes)
  - Brake release motor (towing)
  - Caliper-disc (front)
  - Oil-cooled, multiple disc (rear)
  - Parking
  - Secondary
  - Service
- Transmission:
  - 7-speed automatic powershift
  - Body up shift inhibitor
  - Controlled throttle shifting
  - Directional shift management
  - Downshift inhibitor
  - Neutral start switch
  - Neutral coast inhibitor
  - Reverse shift inhibitor
  - Reverse neutralizer during dumping
  - Programmable top gear selection

ANTIFREEZE
- Extended Life Coolant to –35° C (–30° F)

ELECTRICAL
- Alarm, backup
- Alternator, 95-amp
- Auxiliary jump start receptacle
- Batteries, maintenance-free, 12V (2), 190 amp-hour
- Electrical system, 24V
- Lighting system:
  - Backup light (halogen)
  - Directional signals/hazard warning, (front/rear LED)
  - Headlights, halogen with dimmer
  - Operator access courtesy lights
  - Side profile lights
  - Stop/tail lights LED

Standard Equipment

Standard equipment may vary. Consult your Caterpillar dealer for details.

PRODUCT LINK COMMUNICATIONS
- Product Link Ready

GUARDS
- Engine crankcase
- Driveline

SUSPENSION SYSTEM
- Suspension, front/rear (European Union compliant)

OTHER STANDARD EQUIPMENT
- Body mounting group (flat floor or dual slope body)
- Body safety pin (secures body in up position)
- Body down indicator
- CD-ROM parts book
- Fan, hydraulic demand
- Fuel tank, 530 L (140 gal)
- Ground level battery disconnect
- Ground level engine shutdown
- Ground level grease fittings
- Reservoirs (separate):
  - Brake/converter/hoist
  - Steering
  - Transmission/torque converter
- Rims, 330 × 838 mm (13 × 33 in)
- Rock ejectors
- Service platform, left/right side
- Supplemental steering (automatic)
- Tie down eyes
- Tow hooks, front
- Tow pin, rear
- Vandalism protection locks

Optional Equipment

Optional equipment may vary. Consult your Caterpillar dealer for details.

Optional Body Systems:
- Body Liner, Dual Slope/Flat Floor,
  - Steel, 8 mm, 16 mm, 20 mm or 25 mm
  - (0.31 in, 0.63 in, 0.79 in or 0.98 in)
- Body Liner, Dual Slope/Flat Floor, Rubber, High Impact

Automatic Lube System
Cat Compression Brake
Clustered Grease Fittings
Engine Coolant Heater – 120V
Engine Coolant Heater – 240V
Ether Starting Aid
Exhaust Diverter/Muffler
Fast Fill Fuel System
Fast Fill Fuel System Non-Pressurizing
Fuel Heater Kit
Integrated Brake Control
Muffler
Sound Suppression Package
Spare Rim (330 mm) 13 in
Traction Control System (TCS)
Truck Production Management System (TPMS)
Wheel Chocks

772 Off-Highway Truck

For more complete information on Cat products, dealer services, and industry solutions, visit us on the web at **www.cat.com**

© 2007 Caterpillar
All Rights Reserved
Printed in U.S.A.

Materials and specifications are subject to change without notice. Featured machines in photos may include additional equipment. See your Caterpillar dealer for available options.

CAT, CATERPILLAR, their respective logos, "Caterpillar Yellow" and the POWER EDGE trade dress, as well as corporate and product identity used herein, are trademarks of Caterpillar and may not be used without permission.

AEHQ5724-01 (3-07)

Replaces AEHQ5724

CATERPILLAR®