B35D & B40D 6 X 6

ARTICULATED DUMP TRUCK

OPERATION AND TEST MANUAL

Document Part Number 872091

LEFT BLANK INTENSIONALLY

TO THE SERVICE PERSONEL

⚠ WARNING

Do not operate the machine unless you have read the Operator's Manual and fully understand how to operate the machine properly.

This manual is written for an experienced technician and are on-the-job guides containing only the vital information needed for diagnosis, analyses, testing and repair. Essential tools required in performing certain service works are identified and in this manual and are recommended for use.

The safe operation of your ***BELL EQUIPMENT*** machines very important to prevent any personal injury and/or damage. This manual must be read and fully understood before carrying out any tests on your ***BELL EQUIPMENT*** machine.

Right and left hand sides are determined by facing in the direction of forward travel.

This manual is divided into chapters. The information contained in the manual is in logical sequence, with the instructions written in step by step format.

Effective maintenance on your ***BELL EQUIPMENT*** machine is achieved when personnel fully understand the information contained in this manual.

Every effort has been made to ensure that the information contained in this manual was correct at the time of publication. ***BELL EQUIPMENT Co.*** has a policy of continuous product development, improvement, and design. ***BELL EQUIPMENT Co.*** reserves the right to change, amend and update the design of its product at any time without prior notice. With this policy, changes may have occurred that are not included in this manual.

Whilst every endeavour has been made to provide accurate and reliable information, ***BELL EQUIPMENT Co.*** specifically disclaims any actual or implied warranty and under no circumstances shall be liable for any loss, damage or injury to person or property suffered, whether direct, indirect or consequential, arising from the use of this manual. In particular and without detracting from above, the disclaimer also applies in the event of any specification, warning, or representation contained in this manual being inadequate, inaccurate, or unintentionally misleading.

The user is urged to strictly comply with the instructions and warnings that are given in the interests of general safety. Please do not hesitate to contact your ***BELL EQUIPMENT*** Product Support Representative whenever you have a query on your ***BELL EQUIPMENT*** product or this manual.

SAFETY SYMBOL

The following safety symbol is used for all safety messages. When you see the safety symbol, follow the safety message to avoid personal injury or death.

WARNINGS and **CAUTIONS** must be read, fully understood and followed, before carrying out the action or maintenance procedure concerned.

WARNINGS and **CAUTIONS** are always placed before any action or maintenance procedure where personal injury and/or damage to the machine could occur if that action, test or maintenance procedure is not carried out correctly.

WARNING AND CAUTION SYMBOL

Throughout this manual the word **WARNING** is used to alert the operator and others of the risk of personal injury during the operation of the equipment. **CAUTION** indicates the possible damage to the machine. **NOTE** highlights information of special interest.

⚠ CALIFORNIA PROPOSITION 65 WARNING

Diesel engine exhaust and some of its constituents are known to the state of California to cause Cancer, birth Defects and other Reproductive Harm.

B35D and B40D 6X6
ARTICULATED DUMP TRUCK

OPERATION AND TEST MANUAL

THIS MANUAL IS APPLICABLE TO

B35D 6X6 (E359835)
B40D 6X6 (E409840)

Document Part Number 872091

Issue:0
(Revised:)

Technical Documentation
BELL EQUIPMENT COMPANY
Richards Bay

IMPORTANT

Due to ***BELL EQUIPMENT'S*** policy of continuous product improvement, the information contained in this manual was correct up to the time of printing (Revised date of manual). Any changes after this date will only be included in the next update of this manual.

The illustrations in this manual are pictorial and not necessarily true representations of components. Photographs and illustrations may show optional equipment.

ABBREVIATION LIST

The table below lists the abbreviations used in this manual:

Abbreviation	Meaning
ºC	degrees Celsius
ºF	degrees Fahrenheit
A	ampere
ADT	Articulated Dump Truck
Ah	ampere hours
CB	circuit breaker
d	diagnostic
D	drive
DNS	Do Not Shift
ECU	Electronic Control Unit
FOPS	Falling Objects Protective Structure
ft	foot (feet)
ft lb	foot pound
HP	Horsepower
ISO	International Standards Organisation
kg	kilogram
km	kilometre
km/h	kilometres per hour
kPa	kilo pascal
kW	kilowatt
lb	pound
LCD	Liquid Crystal Display
LED	Light Emitting Diode

Abbreviation	Meaning
m	metre
m^3	cubic metre
N	Neutral
m.p.h.	miles per hour
MSDS	Material Safety Data Sheet
Nm	Newton metre
psi	pounds per square inch
PTO	Power Take-Off
R	Reverse
r.p.m.	revolutions per minute
ROPS	Roll Over Protective Structure
SMR	Service Meter Reading
USGAL	United States Gallon
V	Volt
yd^3	cubic yard

LEFT BLANK INTENSIONALLY

SAFETY

Specification

This machine complies to the CE Specification.

Safety Features

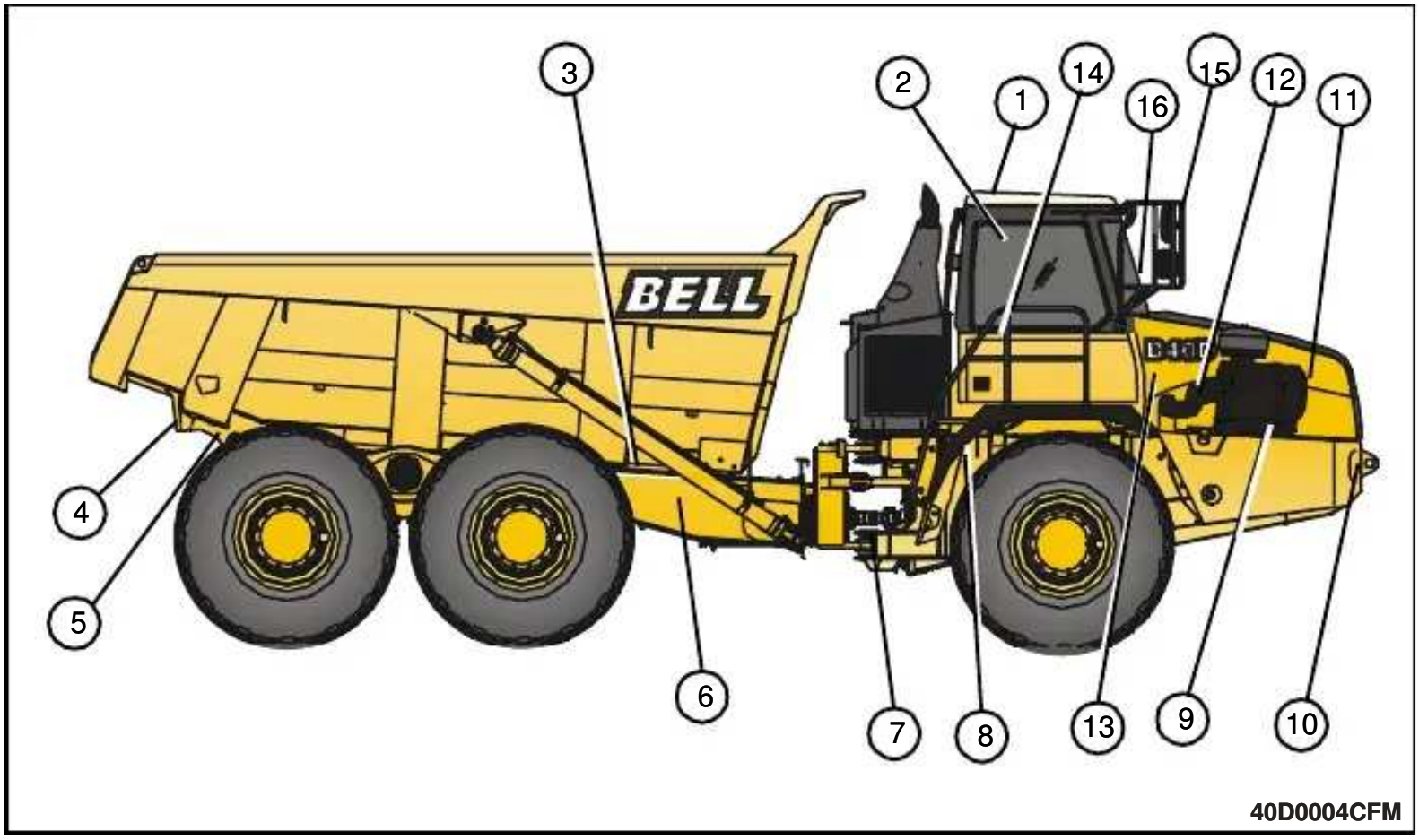

1. **ROPS/FOPS Cab Protection**. The Roll Over Protective Structure has been certified to meet specified test requirements according to SAE J1040 and ISO 3471. The Falling Objects Structure has been certified to meet specified test requirements according to SAE J/ISO 3449 and ISO 3449.

2. **Cab with Heater/Defroster**. Positive pressure ventilation system circulates both outside and inside air through filters for a clean working environment. Built in defroster vents direct air flow for effective window de-fogging/de-icing.

3. **Bin Service Lock.**

4. **Stop/Back lights**. Highly visible lights.

5. **Backup Alarm.**

6. **Independent Parking Brake**.

7. **Articulation locking Bar.**

8. **Secondary Steering**. Ground driven, continuously in operation. Secondary steering indicator light will light when activated.

9. **Horn**.

10. **Halogen Lights and Turn Signals.**

11. **Engine Fan Guard.**

12. **Bypass Start Protection.**

13. **Exhaust Brake and Transmission Retarder (If Equipped).**

14. **Safety Belt Retractors.**

15. **Mirrors.**

16. **Large Windshield Wiper With Washer.**

Material Safety Data Sheets (MSDS)

The Federal Occupational, Safety and Health Administration (OSHA) Standard 29 CFR 1910.1200 and in some cases, State and Local Right-to-Know laws, may require that specific **MSDS** be available to the employees prior to operating this equipment. This may include information on substances contained in this equipment such as antifreeze, engine oil, battery acid, hydraulic fluid and freon (if equipped with an air conditioner).

To ensure a prompt response, please be sure to include your return address and ZIP (postal) code, along with the model, serial number and/or **VIN** number of your machine.

Unauthorised Modifications of the Roll Over Protective Structure (ROPS) and the Falling Objects Protective Structure (FOPS)

Do not make unauthorised modifications or alterations to the ROPS and FOPS such as: welding on extinguisher brackets, CB aerial brackets, fire suppression systems etc. Unauthorised modifications will affect the structural limits of the ROPS and FOPS and will void the certification.

The Roll Over Protective Structure has been certified to meet specified test requirements according to SAE J1040 and ISO 3471. The Falling Objects Protective Structure has been certified to meet specified test requirements according to SAE J/ISO 3449 and ISO 3449.

Any planned modification or change must be reviewed in advance by the ***BELL EQUIPMENT*** **Engineering Department** to determine if the modification or change can be made within the limits of the certifying tests.

It is important that each person in your organisation, including management, be made fully aware of these rules involving **ROPS** and **FOPS**. Whenever anyone sees unauthorised modifications or changes to a machine's **ROPS** or **FOPS** both the customer and manufacturer must be notified in writing.

Make sure that all parts are installed correctly if the **ROPS** or **FOPS** is loosened or removed for any reason. Tighten mounting bolts to the correct torque. The protection offered by **ROPS** or **FOPS** will be impaired if they are subjected to structural damage, is involved in an overturn incident, or is altered in any way. A damaged **ROPS** or **FOPS** must be replaced, not reused.

Noise Emission Levels

The sound pressure was tested according to ISO 6394 (SAE J/ISO 6394) and the sound power was tested according to ISO 6393 (SAE J 2102).\plain \par

General Safety

Be sure all operators of this machine understand every safety message. Replace operator's manual and safety decals immediately if missing or damaged.

Safety Regulation

Every country (State) has its own safety regulations. It is the obligation of the operator to know and follow these. This also applies to local regulations covering different types of work. Should the recommendations in this manual deviate from those of your country, your local safety regulations should be followed.

Mounting and Dismounting the Machine

Always use the handrails and steps provided to get on and off the machine. Use both hands and face the machine. Never get on or off a moving machine. Never jump off the machine. Use a hand line to pull equipment up onto the platform, do not climb on or off the machine carrying tools or supplies.

Use extra care when mud, snow, or moisture present slippery conditions. Keep steps clean and free of grease, oil and foreign objects.

Avoid Work Site Hazards

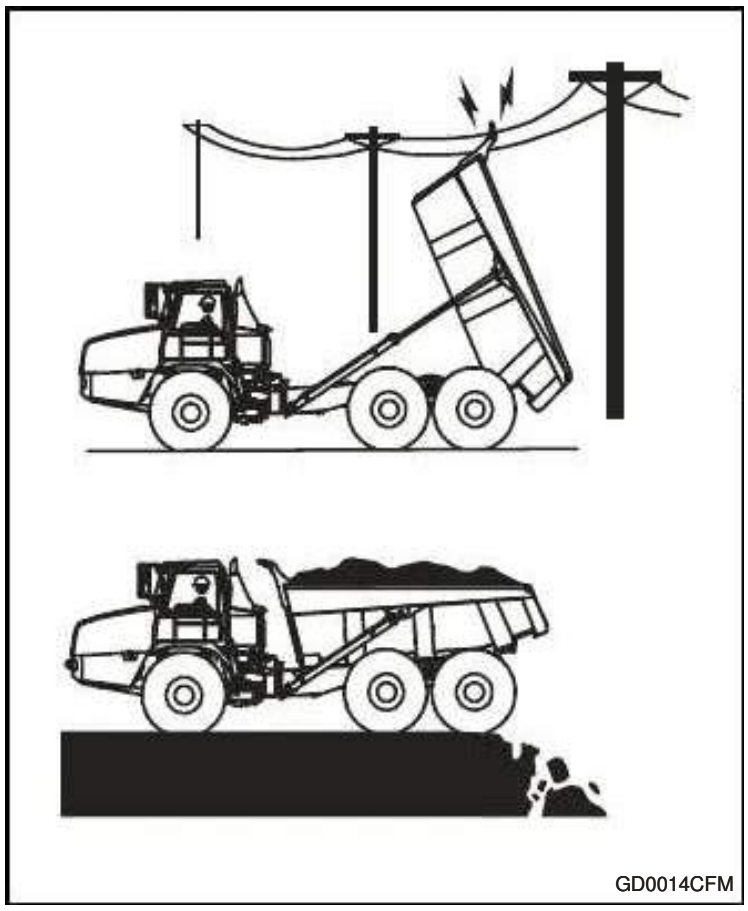

Avoid Overhead Power Lines

Never move any part of the machine within 3 m (10 ft) plus twice the line insulator length, as serious injury or death may result.

Operate Only On Solid Footing

Operate only on solid footing with strength sufficient to support machine. Be alert working near embankments, excavations and with bin raised. Avoid working on surfaces that could collapse under machine.

Use caution when backing up to berms before dumping load.

Keep Riders Off the Machine

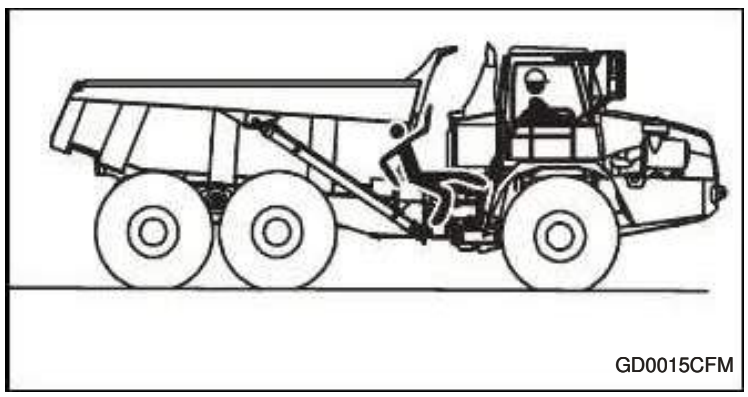

Do not allow unauthorised personnel on the machine.

Prepare for Emergencies

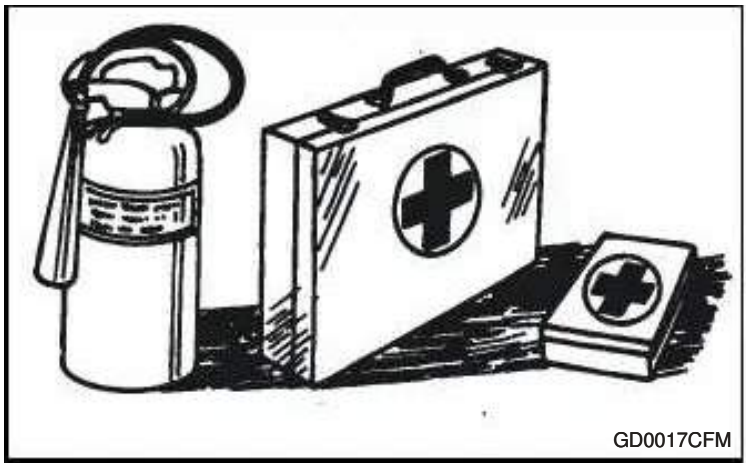

Keep a first aid kit and fire extinguishers handy and know how to use them. Inspect and have your extinguisher serviced as recommended on its instruction plate. Keep emergency numbers for doctors, ambulance service, hospital and fire department near your telephone.

Avoid Backing Over Accidents

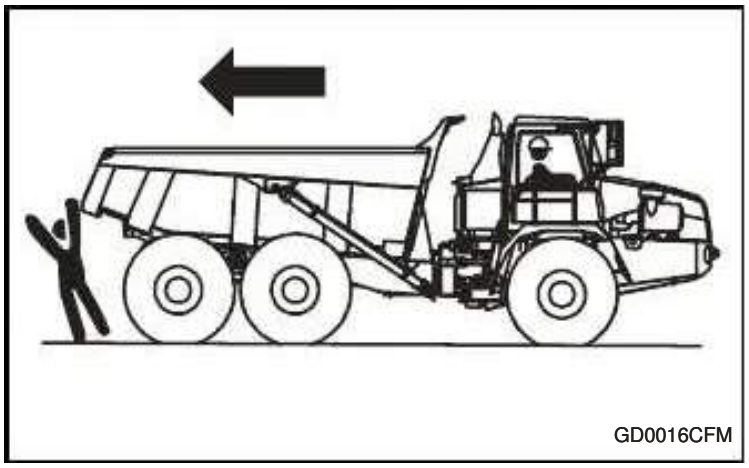

Make sure all persons are clear of machine path before moving the machine. Where conditions permit, raise bin for better visibility to the rear. Use mirrors to assist in checking all round machine.

Keep windows, mirrors and backup alarm clean and in good condition.

Use a signal person when backing if view is obstructed and/or in close quarters. Keep signal person in view at all times.

Use prearranged hand signals to communicate.

Handle Chemical Products And Flammable Fluids Safety

Exposure to hazardous chemicals can cause serious injury. Under certain conditions, lubricants, coolants, paints and adhesives used with this machine may be hazardous.

If uncertain about safe handling or use of these chemical products, contact your authorized dealer for a Material Safety Data Sheet (MSDS).

Handle fuel with care, as it is highly flammable. Do not smoke or go near an open flame or sparks while refuelling. Always stop the engine before refuelling the machine and fill the fuel tank outdoors.

Keep all fuels and lubricants in properly marked containers and away from all unauthorised persons. Do not smoke in the storage areas.

Store oily rags and other flammable material in a protective container, in a safe place.

Do not weld or flame cut pipes or tubes that have contained flammable fluids. Clean them thoroughly with nonflammable solvent before welding or flame cutting them.

Starting fluid is highly flammable. Keep all sparks and flames away when using it. To prevent accidental discharge when storing the pressurised can, keep the cap on the can and store it in a cool protected place. Do not burn or puncture a starting fluid container.

Clean the Machine Regularly

Wait until the engine has cooled before removing trash from areas such as the engine, radiator, batteries, hydraulic lines, fuel tank and operators cab. Remove any grease, oil or debris build-up. Keep the machine, especially the walkways and steps, free of foreign material, such as debris, oil, tools and other items which are not part of the

machine.

Prevent Battery Explosions and Acid Burns

The standard battery supplied with the machine is a sealed type that does not need maintenance. keep sparks and flames away from the batteries.

If a non-sealed battery is subsequently installed, keep sparks and flames away from the batteries. Use a flashlight to check the battery electrolyte level. Use a voltmeter or hydrometer to check battery charge. Never place a metal object across the posts. Always remove the grounded (Negative

-) battery clamp first and replace it last.
Do not smoke in areas where batteries are being charged.

Sulphuric acid in battery electrolyte is poisonous and is strong enough to burn skin, eat holes in clothing and cause blindness if splashed into the eyes.

Avoid the hazard by:

- Filling the batteries in a well ventilated area.
- Wearing eye protection and rubber gloves.
- Avoid breathing fumes when electrolyte is added.
- Avoid spilling or dripping electrolyte.

If you spill acid on yourself:

- Flush your skin with water.
- Apply baking soda or lime to help neutralise the acid.
- Flush your eyes with water for 10 - 15 minutes and get medical attention immediately.

If acid is swallowed:

- Drink large amounts of water or milk.
- Then drink milk of magnesia, beaten eggs, or vegetable oil.
- Get medical attention immediately.

Wear Protective Equipment

Wear a hard hat, protective glasses and other protective equipment as required by the job conditions. Do not wear loose clothing or jewellery that can catch on controls or other parts of the machine.

When you drive connecting pins in or out, guard against injury from flying pieces of debris by wearing goggles or protective glasses. Prolonged exposure to loud noise can cause impairment or loss of hearing. Wear a suitable hearing protective device such as earmuffs or earplugs. Wear gloves when handling wire rope cable.

Use the Seat Belt

Use a seat belt at all times to minimise the chance of injury in an accident.

The seat belt must not be altered or modified in any way. Such changes can render the belt ineffective and unsafe.

The seat belt is designed and intended for the seat's occupant to be of adult build and for one occupant of the seat only.

Avoid High Pressure Fluids

Escaping fluid under pressure can penetrate the skin causing serious injury. Relieve the pressure before disconnecting hydraulic or other lines. Tighten all connections before applying pressure. Keep hands and body away from pinholes and nozzles which eject fluids under high pressure. Use a piece of cardboard or paper to search for leaks.

If any fluid is injected into the skin it must be surgically removed within a few hours by a doctor who is familiar with this type of injury or gangrene may result.

Stay Clear Of Moving Parts

Entanglements in moving parts can cause serious injury.

Stop engine before examining, adjusting or maintaining any part of the machine with moving parts.

Keep guards and shields in place. Replace any guard or shield that has been removed for access as soon as service or repair is complete.

Beware of Toxic Fumes

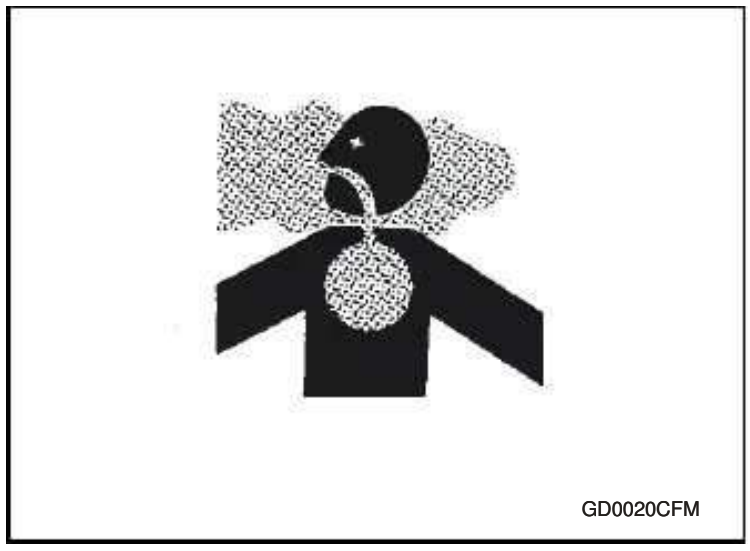

Prevent asphyxiation. Engine exhaust fumes can cause sickness or death.

Operate only in well ventilated indoor areas. Avoid hazardous fumes by first removing paint on painted surfaces before welding.

Wear an approved respirator when sanding or grinding painted surfaces.

If a solvent or paint stripper is used, wash surface with soap and water. Remove solvent or paint containers before welding and allow at least 15 minutes before welding or heating.

Dispose of Waste Properly

Improper disposal of waste can threaten the environment. Fuel, oils, coolants, filters and batteries used with this machine may be harmful if not disposed of properly.

Never pour waste onto the ground, down a drain or into any water source.

Air conditioning refrigerants can damage the atmosphere. Government regulations may require using a certified service centre to recover and recycle used refrigerants.

If uncertain about the safe disposal of waste, contact your local environmental centre or your dealer for more information.

Start Only From Operator's Seat

GD0022CFM

Avoid unexpected machine movement. Start engine only while sitting in operator's seat. Ensure all controls and working tools are in proper position for a parked machine.

Never attempt to start engine from the ground. Do not attempt to start engine by shorting across the starter solenoid terminals.

Lower bin during work interruptions, apply park brake and be careful not to accidentally actuate controls when co-workers are present.

Operating The Machine

Avoid Tip Over

Use safety belt at all times. Do not jump from machine if it tips.

Use extra care when bin is raised. Machine stability is greatly reduced when bin is raised. Drive slowly, avoid sharp turns and uneven ground.

Do not over load the machine.

Before operating machine after it has tipped, carefully inspect all hydraulic and electrical lines.

Operating on Slopes

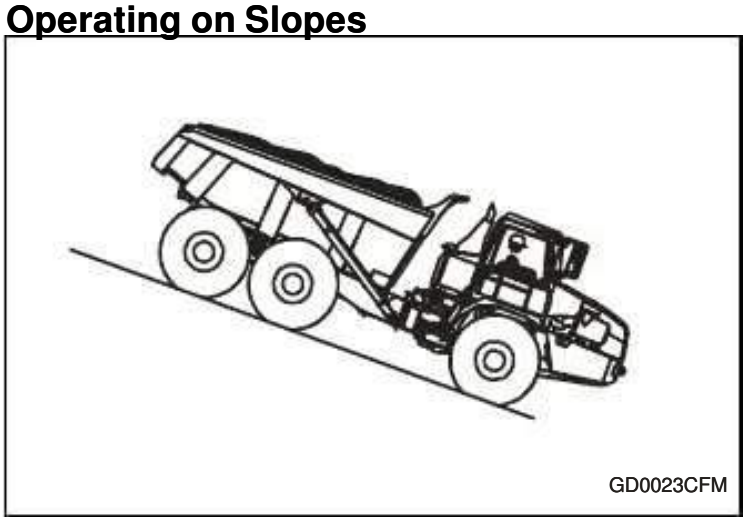
GD0023CFM

Avoid side slope travel whenever possible.

Check service brakes frequently when operating on slopes

The maximum slope will be limited by the ground conditions.

Welding Repairs

NOTE:Disable electrical power before welding. Turn off main battery switch or disconnect positive battery cable. Separate harness connectors to engine, alternator and vehicle microprocessors.

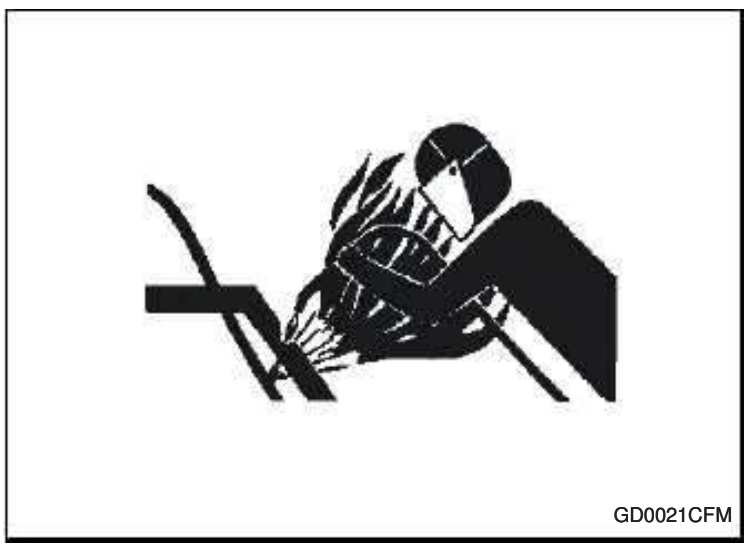
GD0021CFM

Avoid welding near fluid lines. Do not let heat go beyond work area near fluid lines.

Remove paint properly. Wear eye protection and protective equipment when welding.

Do not inhale dust or fumes.

Tyre Information

Welding or heating of the rim components, external fire or excessive use of brakes can cause overheating of the tyres, which could cause a tyre explosion.

This explosion can propel the tyre, rim and final drive components approximately 500 metres (1 640ft) from the machine, which may cause personal injury or death and/or property damage.

If the tyre is overheating and could explode, do not approach it within the area represented by the shaded area in the drawing, until it has cooled.

Stand behind the tread and use a self attaching chuck with extension hose to inflate the tyres. Use a safety cage if available. Do not stand over the tyre.

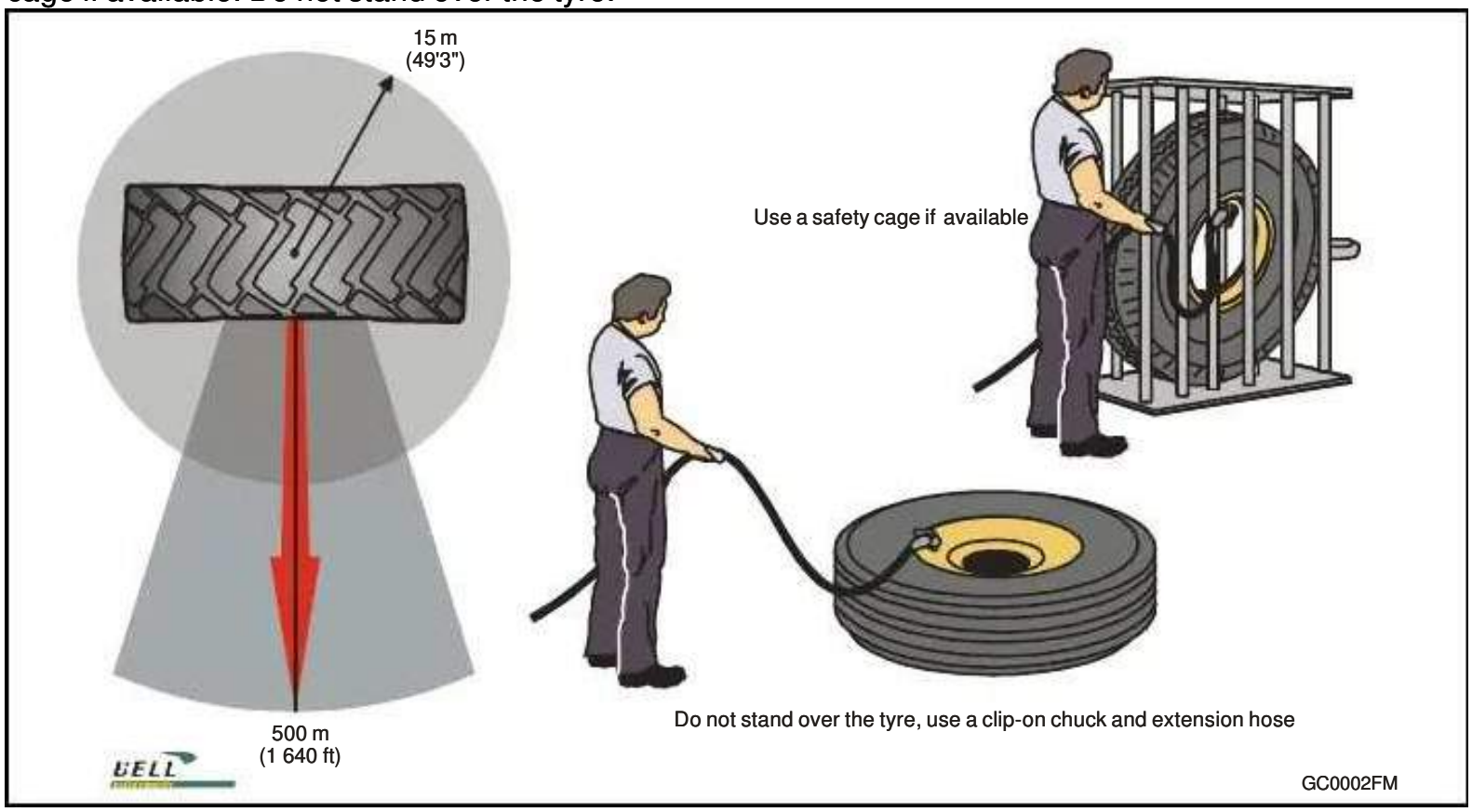

NOTE:It is recommended that only trained personnel service and change tyres and rims.

Inspect and Maintain ROPS

A damages roll-over protective structure (ROPS) should be replaced, not reused.

If the ROPS was loosened or removed for any reason, inspect it carefully before operating the machine again.

To Maintain the ROPS:

- Replace missing hardware using correct grade hardware.
- Check hardware torque.
- Check isolation mounts for damage, loose-ness or wear; Replace if necessary.
- Check ROPS for cracks or physical damaged.

Drive Metal Pins

Always wear protective goggles or safety glasses and other safety equipment.

Use soft hammer or a brass bar between hammer and object to prevent chipping.

LEFT BLANK INTENSIONALLY

BULLETINS

Record the relevant information from the Technical Documentation Bulletins, Service Bulletins and Parts Bulletins into this manual as follows:

- Ensure the manual number (87--------) reflected in the bulletin is the same as the 87------ number at the top of the main content pages.
- Carry out the instructions as detailed in the bulletin.
- Record the required information below.
- File the bulletins in numerical order in a suitable 3 or 4 ring binder.

TECHNICAL DOCUMENTATION BULLETIN RECORD				
BULLETIN NO.	SUBJECT	INSERTED BY		
		NAME	SIGNATURE	DATE

TECHNICAL DOCUMENTATION BULLETIN RECORD

BULLETIN NO.	SUBJECT	INSERTED BY		
		NAME	SIGNATURE	DATE

TABLE OF CONTENTS

SAFETY ---- I

Specification ---- I
Safety Features ---- I
Material Safety Data Sheets (MSDS) ---- II
Unauthorised Modifications of the Roll Over Protective Structure (ROPS) and the Falling Objects Protective Structure (FOPS) ---- II
Noise Emission Levels ---- II
General Safety ---- II

USER'S INFORMATINON FEEDBACK FORM ---- i

CHAPTER 1. OPERATIONAL CHECK-OUT PROCEDURE ---- 1

OPERATIONALCHECK-OUT ---- 1
OPERATIONAL CHECKS - KEY SWITCH ON, ENGINE OFF ---- 1
OPERATIONAL CHECKS - ENGINE ON ---- 4

CHAPTER 3. ELECTRICAL SYSTEM ---- 9

SECTION 1. SYSTEM INFORMATION ---- 9
HARNESSES AND COMPONENT LOCATION ---- 10
EXPLANATION OF WIRE MARKINGS ---- 38

CHAPTER 2. ENGINE ---- 41

SECTION 1. THEORY OF OPERATION ---- 41
ENGINE ---- 41
SECTION 2. DIAGNOSE ENGINE MALFUNCTIONS ---- 45
SECTION 3. ADJUSTMENTS ---- 49
DISPLAY MENU TACHOMETER ---- 49
SLOW AND FAST IDLE ADJUSTMENT ---- 49
VALVE CLEARANCE ADJUSTMENT ---- 49
EXHAUST BRAKE ADJUSTMENT ---- 50
SECTION 4. TESTS ---- 53
CYLINDER COMPRESSION TEST ---- 53
FUEL PUMP PRESSURE TEST ---- 53
OIL PUMP PRESSURE TEST ---- 54
SECTION 2. SYSTEMS AND SUB-SYSTEM DIAGRAMS AND DIAGNOSTICS ---- 58
STARTING AND CHARGING CIRCUIT AND THEORY OF OPERATION ---- 58
COLD START CIRCUIT THEORY OF OPERATION ---- 60
ELECTRONIC UNIT INJECTOR CONTROLLER CIRCUIT THEORY OF OPERATION ---- 62
ENGINE CONTROL UNIT CIRCUIT THEORY OF OPERATION ---- 64
TRANSMISSION CONTROL UNIT AND RETARDER CIRCUIT THEORY OF OPERATION ---- 66
CHASSIS CONTROL UNIT CIRCUIT THEORY OF OPERATION ---- 70
BIN CONTROL, FAN DRIVE AND RANGE HOLD CIRCUIT THEORY OF OPERATION ---- 74
PARK BRAKE AND EXHAUST BRAKE CIRCUIT THEORY OF OPERATION ---- 76

MENU DISPLAY UNIT CIRCUIT THEORY OF OPERATION - 78
SECTION 3. REFERENCES - 97
SERVICE CODE DIAGNOSTICS - AFTER MACHINE REPAIR - 97
CHAPTER 4.TRANSMISSION HD4560 - 213
SECTION 1. THEORY OF OPERATION - 213
GENERAL DESCRIPTIONS - 213
TRANSMISSION IDENTIFICATION - 214
TORQUE CONVERTER - 215
TORQUE CONVERTER OPERATION - 216
LOCK-UP CLUTCH OPERATION - 220
B40D/B35D STALL SPEEDS - 222
PLANETARY GEARS AND POWER FLOWS - 223
THE BASIC LAWS OF PLANETARY GEAR SETS - 224
CLUTCHES - 224
HD TRANSMISSION PLANETARY CONFIGURATION - 225
HD TRANSMISSION CLUTCH CONFIGURATION - 226
POWER FLOW - 230
HYDRAULIC SYSTEM - 239
MAIN-PRESSURE CIRCUIT - 239
CONTROL MAIN CIRCUIT - 241
TORQUE CONVERTER CIRCUIT - 241
CONVERTER-IN PRESSURE CIRCUIT - 242
HYDRAULICS (OPERATION) - 243
SOLENOIDS - 243
NORMALLY OPEN SOLENOIDS - 244
NORMALLY CLOSED SOLENOIDS - 245
HYDRAULIC CIRCUITS - 247
TORQUE CONVERTER AND LUBE PRESSURE CIRCUITS - OVERVIEW - - - - - - - - - - - - - - - 255
CONVERTER FLOW VALVE OPERATION - 255
OVERDRIVE KNOCKDOWN VALVE - 255
EXHAUST BACKFILL PRESSURE - 256
PRESSURE TABLE AND TEST PIONTS - 257
RETARDER - 259
APPLICATIONS AND CAPACITIES - 259
Retarder Control - Overview - 260
Apply Controls - 260
INPUTS AND OUTPUTS - 261
RETARDER CONTROL HYDRAULICS - 261
TESTING RETARDER CHARGING PRESSURE - 262
Retarder Off - 262
HD RETARDER HYDRAULIC SCHEMATIC RETARDER OFF - 263
HD RETARDER HYDRAULIC SCHEMATIC RETARDER ON - 264

ELECTRONIC CONTROL SYSTEM ---------- 265
TRANSMISSION CONTROL UNIT (T C U) ---------- 265
PULSE WIDTH MODULATION (P W M) ---------- 265
PUSH BUTTON SHIFT SELECTOR ---------- 269
SPEED SENSORS ---------- 270
WIRING HARNESSES ---------- 270
RANGE / SHIFT TESTS ---------- 271
DO NOT SHIFT LIGHT ---------- 272
SECTION 2. DIAGNOSTIC INFORMATION ---------- 280
DIAGNOSTIC PROCEDURE ---------- 280
DIAGNOSE POWER TRAIN SYSTEM MALFUNTIONS ---------- 281
SECTION 3. TESTS ---------- 297
TRANSMISSION WARM-UP PROCEDURE ---------- 297
CHAPTER 5. PNEUMATIC SYSTEM ---------- 309
SECTION 1. THEORY OF OPERATION ---------- 309
PNEUMATIC SYSTEM OPERATION ---------- 309
PNEUMATIC SYSTEM SCHEMATIC ---------- 310
CHAPTER 5. PNEUMATIC SYSTEM ---------- 323
SECTION 2. DIAGNOSTIC INFORMATION ---------- 323
DIAGNOSTIC PROCEDURE ---------- 323
DIAGNOSE PNEUMATIC SYSTEM MALFUNCTIONS ---------- 324
SECTION 3. TESTS ---------- 331
PNEUMATIC SYSTEM MAIN PRESSURE TEST AND ADJUSTMENT ---------- 331
PARK BRAKE PRESSURE TEST ---------- 332
CHAPTER 6. HYDRAULIC SYSTEM ---------- 333
SECTION 1. THEORY OF OPERATION ---------- 333
ARTICULATED DUMP TRUCK HYDRAULIC SYSTEM OPERATION ---------- 333
SECTION 2. DIAGNOSTIC INFORMATION ---------- 373
DIAGNOSTIC PROCEDURE ---------- 373
DIAGNOSE HYDRAULIC SYSTEM MALFUNCTIONS ---------- 374
HYDRAULIC SYSTEM COMPONENT LOCATION ---------- 384
SECTION 3. TESTS ---------- 391
JT05800 DIGITAL THERMOMETER INSTALLATION ---------- 391
JT02156A DIGITAL PRESSURE/TEMPERATURE ANALYZER INSTALLATION ---------- 391
HYDRAULIC OIL CLEANUP PROCEDURE USING PORTABLE FILTER CADDY ---------- 391
HYDRAULIC SYSTEM WARM-UP PROCEDURE ---------- 392
CYCLE TIME TEST ---------- 393
MAIN HYDRAULIC PUMP RESIDUAL AND COMPENSATOR VALVES TEST AND ADJUSTMENT 394

SYSTEM RELIEF VALVE AND BIN RAISE CIRCUIT RELIEF VALVE TEST - - - - - - - - - - - - - - 395
PRIORITY VALVE TEST - 396
ACCUMULATOR PRESSURE REDUCING VALVE TEST AND ADJUSTMENT - - - - - - - - - - - - 396
BRAKE ACCUMULATOR CHARGE VALVE TEST AND ADJUSTMENT - - - - - - - - - - - - - - - - - 397
BRAKE LOW PRESSURE SWITCH AND BRAKE ACCUMULATOR TEST - - - - - - - - - - - - - - - - 398
FRONT AND REAR BRAKE ACCUMULATORS PRESSURE TEST AND CHARGE PROCEDURE - 399
SERVICE BRAKE VALVE TEST - 399
STEERING RELIEF VALVE PRESSURE TEST AND ADJUSTMENT - - - - - - - - - - - - - - - - - - - 400
STEERING CYLINDER LEAKAGE TEST - 401
SECONDARY STEERING PUMP RESIDUAL AND COMPENSATOR VALVES TEST AND ADJUSTMENT - 401
BIN LOWER CIRCUIT RELIEF VALVE TEST - 402
FAN DRIVE CONTROLLER TEST AND ADJUSTMENT - 403
WET DISK BRAKE THERMAL VALVE TEST - 403
WET DISK BRAKE COOLING SYSTEM BYPASS CHECK VALVE TEST - - - - - - - - - - - - - - - - - 404
WET DISK BRAKE COOLER RESTRICTION TEST - 404
WET DISK BRAKE COOLING OIL FILTER RESTRICTION TEST - 405

CHAPTER 7. HEATING AND AIR CONDITIONING - 407

SECTION 1. THEORY OF OPERATION - 407
AIR CONDITIONING SYSTEM CYCLE OF OPERATION - 407
HEATER CORE OPERATION - 408

SECTION 2. DIAGNOSTIC INFORMATION - 409
DIAGNOSE AIR CONDITIONING SYSTEM MALFUNCTIONS - 409
DIAGNOSE HEATER SYSTEM MALFUNCTIONS - 411
HEATING/AIR CONDITIONING COMPONENT LOCATION - 412

SECTION 3. TESTS - 415
AIR CONDITIONING OPERATIONAL CHECKS - 415
R134A AIR CONDITIONING SYSTEM TEST - 416
OPERATING PRESSURE DIAGNOSTIC CHART - 417
A/C FREEZE CONTROL SWITCH TEST - 419
A/C COMPRESSOR CLUTCH TEST - 419
A/C HIGH/LOW PRESSURE SWITCH TEST - 419
A/C EXPANSION VALVE TEST - 420
EXPANSION VALVE BENCH TEST - 421
REFRIGERANT LEAK TEST - 422

USER'S INFORMATINON FEEDBACK FORM

Should you, as user of this manual, have any suggestion for improving the manual, or you find any errors or omissions, then we would like to know.

Please complete a facsimile of this form and hand it in to your nearest ***BELL EQUIPMENT*** Product Support Representative or post it directly to your nearest ***BELL EQUIPMENT*** Branch. Addresses are given in the Operator Maintenance Manual.

Ideas, Comments (Please State Page Number):_____

_____

_____

_____

_____

_____

_____

Machine Model: _____

Serial Number:_____

VIN: _____

Page Number: _____

OVERALL, how would you rate the quality of this publication? (Check one)

Poor		Fair		Good		Very Good		Excellent	
1	2	3	4	5	6	7	8	9	10

Company Name: _____

Technician Name: _____

Address:_____

_____

_____

Phone Number: _____

Fax Number: _____

Thank you for your co-operation.

LEFT BLANK INTENSIONALLY

CHAPTER 1. OPERATIONAL CHECK-OUT PROCEDURE

OPERATIONALCHECK-OUT

Use this procedure to check operation of the machine. This procedure is designed so you can make a quick check of the machine operation while performing specific checks from the operator's seat.

Should you experience a problem with the machine, you will find helpful diagnostic information in this check-out that will help pinpoint the cause.

A location will be required which is level and has adequate space to perform the check-out procedure. No tools or equipment are required to perform the check-out procedure.

Compete the necessary visual checks (oil levels, oil condition, external leaks, loose hardware, linkages, wiring, etc.) prior to doing the operational check-out. The machine must be at operating temperature for many of the checks.

Start at the top of the left column and read completely down column before performing check. Follow this sequence from left to right. In the far right column, if no problem is found, you will be instructed to go to next check. If a problem is indicated, you will be referred to either a chapter in this manual for specific test or the repair manual for repair procedure.

OPERATIONAL CHECKS - KEY SWITCH ON, ENGINE OFF

Turn battery disconnect switch **ON**. Turn key switch to **ON** position.

Checks	Questions/Tasks	Results
Gauges and Indicator Lights	Do all indicator lights come **ON** or flash? Do all gauges and speedometer move to centre position? Do all sections of monitor liquid crystal display's appear? Do all sections of transmission control display and mode button indicator light come **ON?** Does audible alarm come **ON**? **NOTE:1. Cold start indicator light will remain ON for a maximum of 20 seconds in low ambient temperature conditions.** **2. Air pressure indicator may remain ON, depending on system air pressure.** Do all gauges and displays return to normal operation mode and audible alarm go **OFF** after 3 seconds? Do all indicator lights, except for secondary steering (marked emergency steering), battery charge and park brake go **OFF**?	**YES:** Go to next check. **NO:** Check circuit breakers and fuses. Reset circuit breakers and/or replace fuses as necessary. Check indicator light bulbs. Replace if necessary. Go to **("Menu Display Unit Circuit Theory of Operation" on page 86).**

Checks	Questions/Tasks	Results
Transmission Shift Control	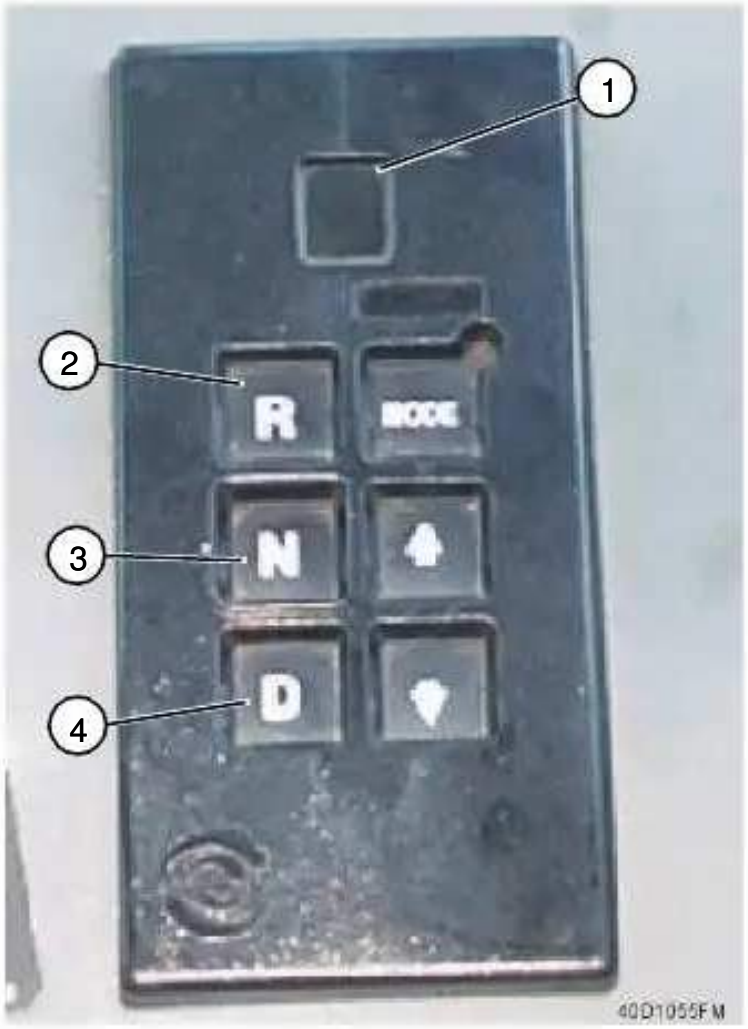 Do all sections in display (1) illuminate forming a “**O**” with an “**X**” in it? Does “**N**” appear in the display after 2 seconds? Press “**D**” (Drive) (4) on the gear selector. Does “**6**” appear in the display (1) and remain? Press “**R**” (Reverse) (2) on the gear selector. Does “**R**” appear in the display and remain? Press “**N**” (Neutral) (3) on the gear selector. Does “**N**” appear in the display and remain? Does shift control operate correctly?	**YES:** Go to next check. **NO:** Replace transmission shift control.

Checks	Questions/Tasks	Results
Fuel cap	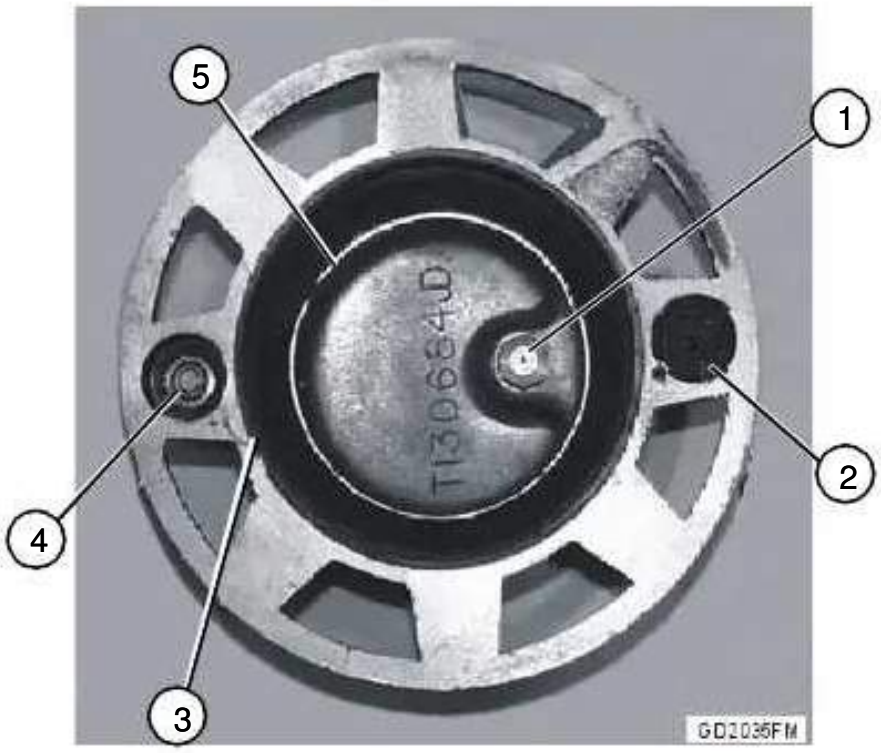 Remove fuel tank cap. Does centre of vacuum valve (1) move freely? Is screen (2) clean and not plugged? Is rubber seal (3) not damaged? Does ball in pressure valve (4) moves freely? Is vent hole (5) not plugged? Are all parts in serviceable condition?	**YES:** Go to next check. **NO:** Replace parts as needed or replace fuel tank cap.

OPERATIONAL CHECKS - ENGINE ON

Checks	Questions/Tasks	Results
Gauges and Indicator Lights	Start engine. **NOTE:1. Low air pressure alarm will be ON until air pressure reaches normal operating pressure.** **2. Transmission oil temperature gauge will not begin to indicate temperature until transmission oil is close to operating temperature.** Do all indicator lights, except park brake indicator light, go **OFF** after the engine starts? Does the Menu Display Unit display engine speed? Does engine oil pressure gauge display engine oil pressure? Does needle of gauge indicates pressure is increasing to green (Normal)? Check air pressure gauge immediately after the engine has started. Does needle of gauge indicates pressure is increasing to green (Normal)?	**YES:** Go to next check. **NO:** Go to **(“Menu Display Unit Circuit Theory of Operation” on page 86).**
Service Brake Accumulator.	Apply brakes repeatedly until main hydraulic pump strokes to charge accumulators. When accumulators are fully charged, pump will destroke. Turn engine “**OFF**”. Turn key switch “**ON**” again and wait for indicator lights to go “**OFF**” Apply the service brakes, counting the number of applications until the accumulator low pressure light illuminates. **B35D:** Does the light illuminates after three brake applications (Minimum)? **B40D:** Does the light illuminates after two brake applications (Minimum)?	**YES:** Go to next check. **NO:** Go to **(“FRONT AND REAR BRAKE ACCUMULATORS PRESSURE TEST AND CHARGE PROCEDURE” on page 399).**

Checks	Questions/Tasks	Results
Service Brake.	**NOTE:Perform this check in an open area where machine can travel at full speed.** Drive machine slowly. Apply brake pedal to stop machine. Release the brake pedal. Does brake pedal push easily without binding? Does brake pedal return to the released position so brakes are not dragging? Do brakes stop machine in a reasonable distance without pulling to one side or making noise? Drive machine at full speed. Release accelerator and apply brake pedal to stop machine. Do brakes stop machine in a reasonable distance without pulling to one side or making noise?	**YES:** Go to next check. **NO:** Go to **(“Service Brake System Malfuntion” on page 378)**.
Park Brake	**⚠ CAUTION** **Machine will stop abruptly during this check. Fasten seat belt. Perform check in open area.** Start engine. Move park brake lever forward Drive machine at slow idle in 1 st gear at ~ 5 km/h (3 m.p.h.). Pull park brake lever rearward until it locks into position. Does park brake indicator light illuminates? Does park engages and machine stops	**YES:** Continue check. **NO:** Go to **(“DIAGNOSE POWER TRAIN SYSTEM MALFUNTIONS” on page 281)**.
	With engine “**ON**”, transmission in “**N**” (Neutral) and park brake “**ON**” move park brake forward. Shift transmission to “**D**” (Drive). Slowly increase engine speed. Does machine move when engine speed is just above slow idle? Return engine to slow idle. Shift transmission to “**N**” (Neutral).	**YES:** Go to next check. **NO:** Go to **(“DIAGNOSE POWER TRAIN SYSTEM MALFUNTIONS” on page 281)**.

Checks	Questions/Tasks	Results
Steering	Park machine in an open area, on a hard level surface. Turn inter-axle switch to the "**OFF**" position. Release park brake. Release service brakes. Run engine at slow idle. Turn steering wheel fully left and then fully right. Does machine turn smoothly in both directions.	**YES:** Continue check. **NO:** Go to **("Steering System Malfunctions" on page 380)**.
	Run engine at fast idle. Turn steering wheel fully left then right. Does machine turn smoothly in both directions.	**YES:** Go to next check. **NO:** Go to **("Steering System Malfunctions" on page 380)**.

Checks	Questions/Tasks	Results
bin	**⚠ CAUTION** **Avoid possible serious injury from machine movement. Clear area of all bystanders before performing test. Area must have enough overhead clearance to raise bin to full height of 7226 mm (23 ft. 8.5 in.). Do not perform this test within 4 m (13ft.) of high voltage power lines.** Perform this check in an open area, clear of bystanders. Position the machine frames straight. Operate the engine at 1500 r.p.m. Pull bin control lever rearward to raise bin. When bin is almost complete up, reduce engine speed to slow idle. Does bin raise to full height smoothly?	**YES:** Continue check. **NO:** Go to **(“Hydraulic System Malfunctions” on page 374).**
	Release bin control lever. Does bin control lever return to neutral position?	**YES:** Continue check. **NO:** Go to bin Control Valve Operation. **(See Chapter 21, SECTION 1, Repair Manual)**
	Push bin control lever to full forward detent bin float position and release lever. Does the control lever stay in the float position until the last 5% (3.5°) of body travel, at which time the lever returns to neutral position? Dos bin lower to full down position smoothly?	**YES:** Go to next check. **NO:** Go to (**“Bin Control, Fan Drive and Range Hold Circuit Theory of Operation” on page 76).**

Checks	Questions/Tasks	Results
Viscous Fan Drive	**NOTE:Engine must be cool or fan may not turn freely by hand.** Allow engine to cool. Turn fan by hand, feel for rough bearing or fan not turning freely. Does fan turn freely and smoothly? Start engine and run 2 -3 minutes. Check that fan turns at near engine speed, then slows down. As engine warms to normal operating temperature, fan will speed up to near engine speed. Does fan speed increase as engine warms? Turn engine "**OFF**"	**YES:** Do to next check. **NO:** Replace viscous fan drive.
Exhaust Smoke	Start engine and allow to warm to normal working temperature. Operate machine under full load at fast engine speed. Observe exhaust colour. No smoke is normal. Blue smoke indicates faulty or stuck piston rings. White or grey smoke indicates stuck piston rings, fuel cetane too low or engine running too cold. Heavy black smoke indicates injection nozzles faulty, engine injection system incorrect, fuel cetane to low or air filter element clogged. Is engine exhaust smoke normal colour?	**YES:** Continue to next check. **NO:** Go to ("**SECTION 2. DIAGNOSE ENGINE MALFUNCTIONS" on page 45).**
Engine Speed	Start engine and warm to normal operating temperature. Run engine at slow idle; Record r.p.m. Is engine speed 600 ± 20 r.p.m? Increase engine speed to fast idle. Record r.p.m. Is engine speed 2240 ± 20 r.p.m.	**YES:** Check complete. **NO:** Do slow and Fast idle Adjustment. **(See "SLOW AND FAST IDLE ADJUSTMENT" on page 49).**

CHAPTER 2. ENGINE

SECTION 1. THEORY OF OPERATION

ENGINE

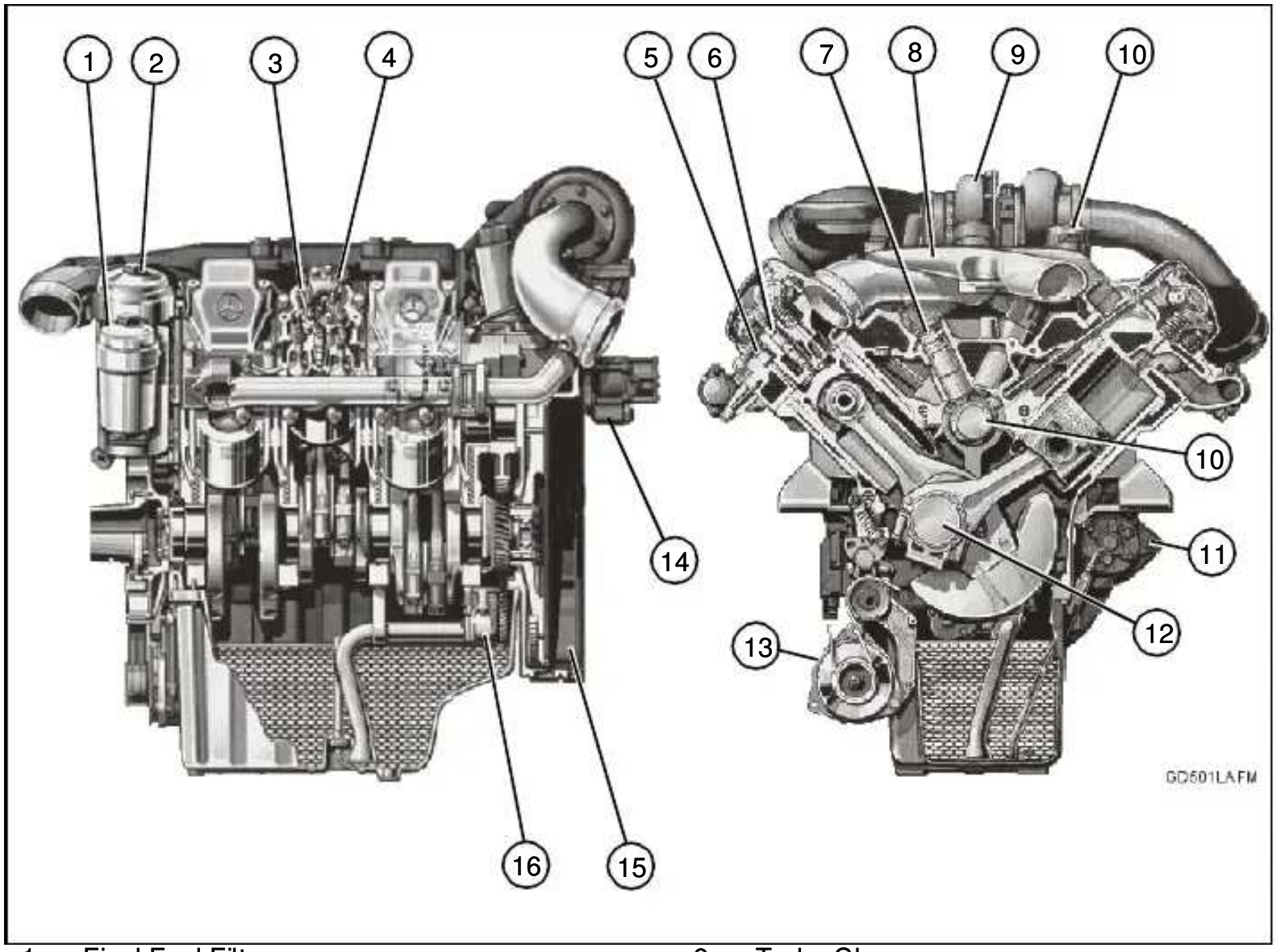

1. Final Fuel Filter.
2. Oil Filter.
3. Engine Exhaust Valve Rocker Arm.
4. Engine Intake Valve Rocker Arm.
5. Engine Exhaust Valve Brake.
6. Fuel Delivery Nozzle.
7. Electronic Unit Injector (EUI).
8. Intake Manifold.
9. Turbo Charger
10. Camshaft
11. Starter Motor.
12. Crankshaft.
13. Alternator.
14. Fuel Pump.
15. Flywheel.
16. Oil Pump.

The engine is liquid cooled, 90° V-6 cylinder. The cast iron block is one piece and each cylinder has a separate cylinder head. It has overhead valves, 4 per cylinder, two intake valves and two exhaust valves. Roller cam followers ride on the camshaft which move the push rods that open and close the valves. The EUI's (Electronic Unit Injectors) also ride on the camshaft which send pressurized fuel through a fuel pipe to the fuel delivery nozzles, which are located directly over the top of the piston. The EUI's are electronically controlled by the EUI controller, a crankshaft position sensor, camshaft position sensor and a solenoid.

Electronic Unit Injector Fuel System

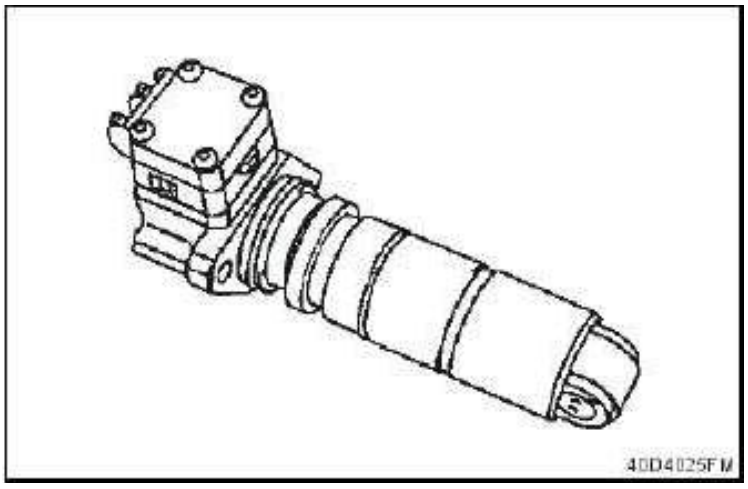

The EUI system is designed to precisely control:

- The start of injection,
- An accurate delivery of a calculated amount of fuel.
- A sharp end of injection.

The fuel system consists of four sub-systems;

- Low Pressure Supply System,
- High Pressure System - Unit Injectors, Fuel Delivery Nozzles,
- Control System.

The electronic unit injector fuel system has these notable features:

- Precision control of timing and fuel delivery,
- Field proven reliability,
- Electronic control of each cylinder,
- One unit injector per cylinder,
- High injection pressures,
- Low emissions,
- Compact design,
- Eliminates injection pump,
- No injection timing adjustment required.

Fuel Delivery

Suction Stage

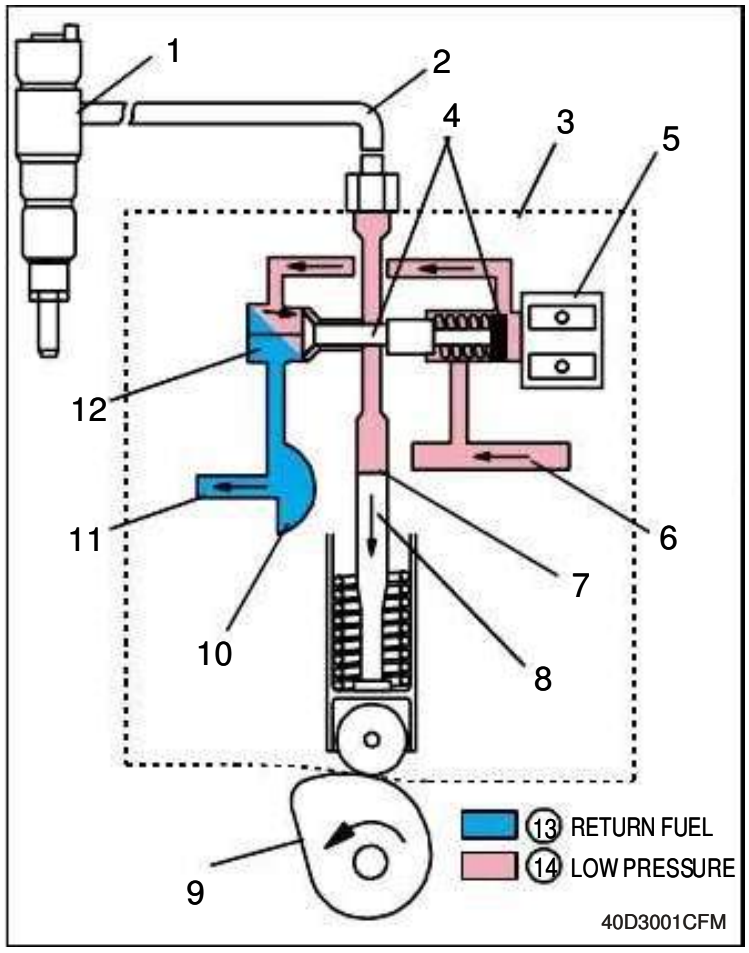

1. Fuel Delivery Nozzle.
2. Connector Pipe.
3. EUI (Electronic Unit Injector).
4. Valve.
5. Solenoid.
6. Supply Gallery in Crankcase.
7. High Pressure Chamber.
8. Pump Plunger.
9. Engine Camshaft.
10. Pressure Relief Chamber.
11. Return Flow Gallery in Crankcase.
12. Bleed-Off Chamber.
13. Return Fuel.
14. Low Pressure.

The EUI's (3) ride on individual lobes on the engine camshaft (9). There is one EUI per cylinder. The EUI's are mounted in the block of the engine under the intake manifold. There are passages in the block that route fuel to and from the EUI's. The fuel delivery nozzles (1) are located in the cylinder head and are positioned directly above the pistons. A connector pipe (2) is used to direct fuel from the EUI's to the nozzles. Internal passages in the cylinder heads allow excess fuel from the nozzles to be bled off. A solenoid (5) controls the fuel metering valve (4). For complete electrical theory of the EUI **SEE "ELECTRONIC UNIT INJECTOR CONTROLLER CIRCUIT THEORY OF OPERATION" on page 62.**

During the suction stage, the pump plunger (8) moves down. As a result of the constant fuel excess pressure of approximately 600kPa (6 bar) (87 psi) in the fuel low pressure circuit, the high pressure chamber (7) of the unit pump is fitted with fuel through the supply gallery (6).

Pre-Delivery Stage

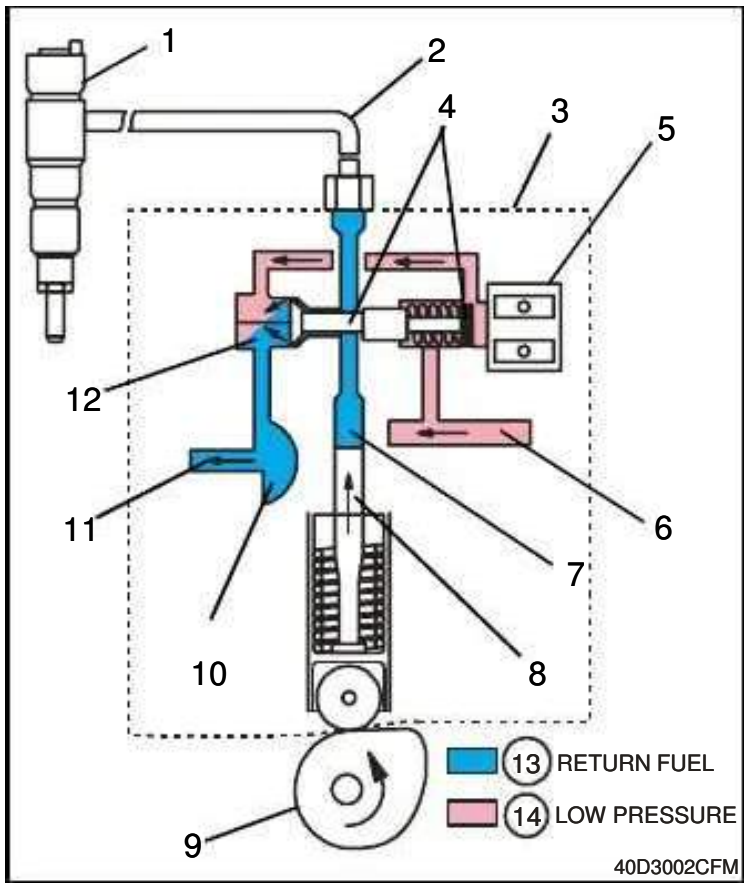

1. Fuel Delivery Nozzle.
2. Connector Pipe.
3. EUI (Electronic Unit Injector).
4. Valve.
5. Solenoid.
6. Supply Gallery in Crankcase.
7. High Pressure Chamber.
8. Pump Plunger.
9. Engine Camshaft.
10. Pressure Relief Chamber.
11. Return Flow Gallery in Crankcase.
12. Bleed-Off Chamber.
13. Return Fuel.
14. Low Pressure.

During the pre-delivery stage, the pump plunger (8) moves up. As the valve (4) is not yet closed, the fuel is first forced into the pressure relief chamber (10), then into the return gallery(11).

Delivery Stage

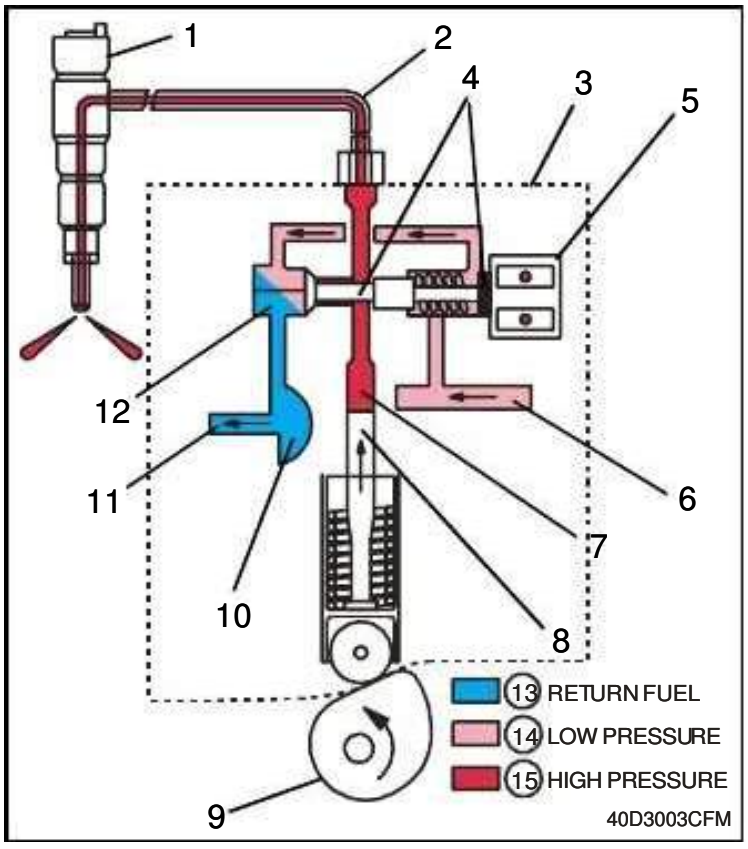

1. Fuel Delivery Nozzle.
2. Connector Pipe.
3. EUI (Electronic Unit Injector).
4. Valve.
5. Solenoid.
6. Supply Gallery in Crankcase.
7. High Pressure Chamber.
8. Pump Plunger.
9. Engine Camshaft.
10. Pressure Relief Chamber.
11. Return Flow Gallery in Crankcase.
12. Bleed-Off Chamber.
13. Return Fuel.
14. Low Pressure.
15. High Pressure.

As soon as the valve (4) is closed while the pump plunger (8) is moving towards its top dead centre, the unit pump is in the delivery stroke. Fuel injection into the combustion chamber takes place in the delivery stage. During this stage the fuel pressure in the high pressure chamber (7) rises to a pressure approximately 160 000 kPa (1600 bar) (23 206 psi).

Residual Stage

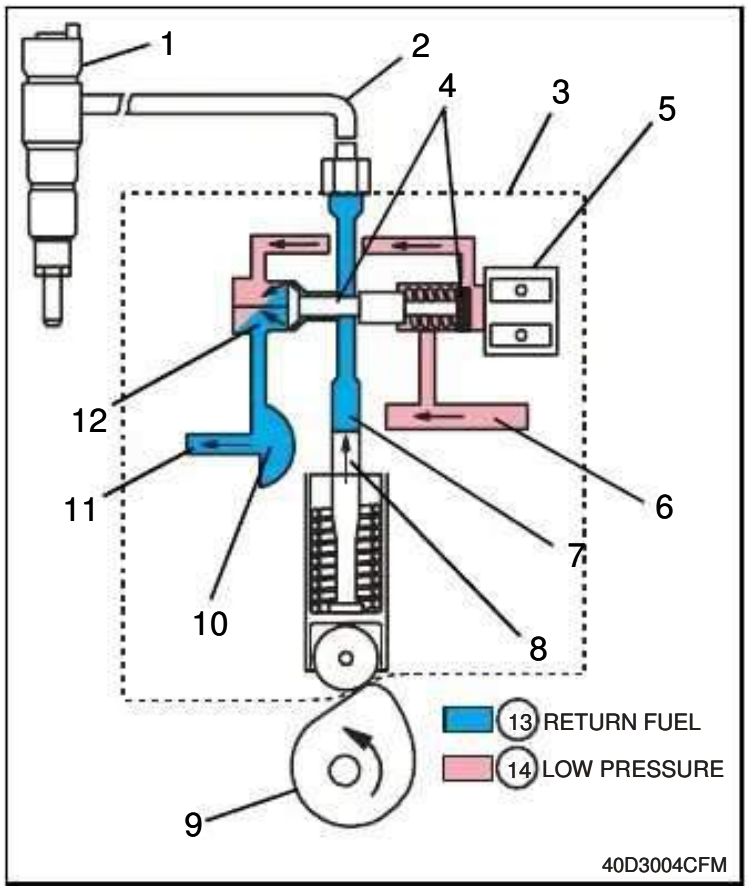

1. Fuel Delivery Nozzle.
2. Connector Pipe.
3. EUI (Electronic Unit Injector).
4. Valve.
5. Solenoid.
6. Supply Gallery in Crankcase.
7. High Pressure Chamber.
8. Pump Plunger.
9. Engine Camshaft.
10. Pressure Relief Chamber.
11. Return Flow Gallery in Crankcase.
12. Bleed-Off Chamber.
13. Return Fuel.
14. Low Pressure.

After the valve (4) has opened (end of delivery), The fuel pressure in the high pressure chamber (7) is collapsing. The remaining fuel delivery by the pump plunger (8) up to the apex of the camshaft (9), is again forced into the pressure relief chamber (10) and the return flow gallery (11).

The pressure relief chamber serves as an expansion chamber for the pressure peaks of the unit pump in the residual stage. This prevents the pressure ratio of the adjacent unit pumps being affected through the return flow gallery.

Cold Start Operation

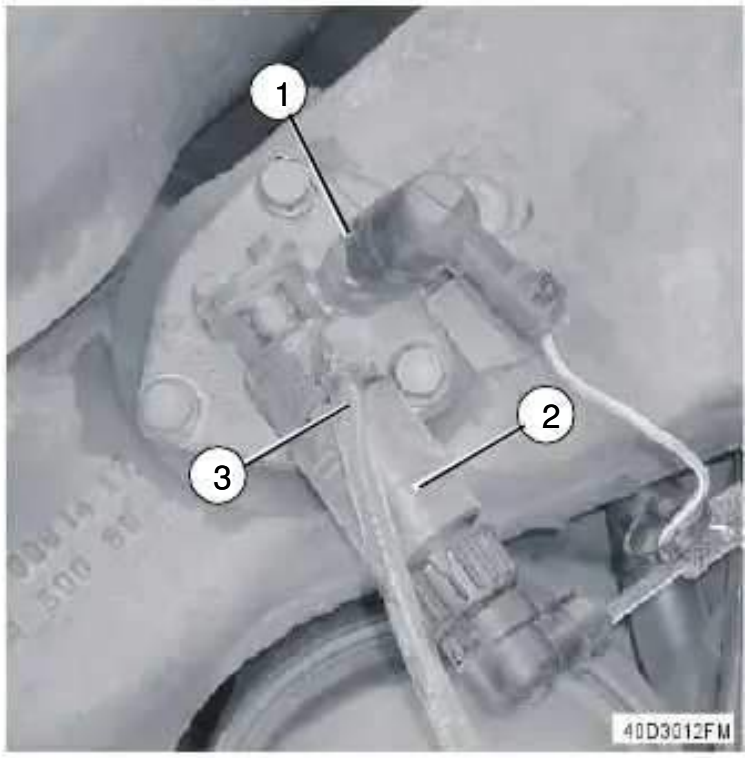

1. Glow Plug.
2. Solenoid.
3. Cold Start Jet.

The cold start system operates only when the engine coolant temperature is below 15°C (59°F).

When the key switch is tuned to the "**ON**" the position, the glow plug (1) begins to heat up and the indicator light on the dash will light up. Light will stay on and the glow plug will continue to heat up for approximately twenty seconds.

When the key switch is turned to the START position, the solenoid (2) is energized, allowing fuel to flow to the cold start jet (3). The fuel from the jet is sprayed on the glow plug causing the fuel to atomize. The atomized air/fuel mixture is directed to the cylinders by the incoming air through the intake manifold.

CHAPTER 2. ENGINE

SECTION 2. DIAGNOSE ENGINE MALFUNCTIONS

Symptom	Problem	Solution
Starter motor turns engine too slowly	Batteries under charged	Recharge or replace batteries.
	Poor engine ground connection.	Repair, clean or secure connections.
	Loose or dirty battery terminals.	Clean and tighten battery terminals.
	Worn starter motor.	Perform starter load test.
	Hydraulic Cut Off Solenoid Valve.	**Go to "Hydraulic System Manifold Operation (Top View)" on page 354.**
Hard starting when cold	Defective cold start aid.	**See "Cold Start Operation" on page 44**
	Incorrect valve clearance.	Adjust valve clearance **(See "VALVE CLEARANCE ADJUSTMENT" on page 49.)**
	Compression too low.	Test compression **(See "CYLINDER COMPRESSION TEST" on page 53.)**
Engine turns but does not start	Insufficient fuel in fuel tank.	Fill tank and bleed system.
	Compression too low.	Test compression **(See Cylinder Compression Test in SECTION 4.)**
	Low fuel pump pressure.	Test fuel pump pressure **(See "CYLINDER COMPRESSION TEST" on page 53.)**
Engine stops soon after starting	Insufficient fuel in fuel tank.	Fill tank and bleed system.
	Air in fuel system.	Bleed system, check and repair air entry.
	Blocked fuel filters.	replace fuel filters.
	Low fuel pump pressure.	Test fuel pump pressure **(See "FUEL PUMP PRESSURE TEST" on page 53.)**
	Electronic Unit Injector.	Check fault codes.

Symptom	Problem	Solution
Engine misfires	Incorrect valve clearance.	Adjust valve clearance **(See "VALVE CLEARANCE ADJUSTMENT" on page 49.)**
	Compression too low.	Test compression **(See "CYLINDER COMPRESSION TEST" on page 53.)**
	Low fuel pump pressure.	Test fuel pump pressure **(See "FUEL PUMP PRESSURE TEST" on page 53.)**
Low engine oil pressure	Failed pressure gauge.	Test or replace.
	Incorrect grade of oil.	Change oil.
	Low pump output.	Test oil pump pressure. Do Oil Pump Pressure Test (See **"OIL PUMP PRESSURE TEST" on page 54**
	Pressure relief valve stuck.	Install new pressure relief valve **(See Remove and Install Oil Pressure relief valve in CHAPTER 4, SECTION 5 of Repair Manual.)**
	Engine bearings worn.	Remove, inspect and repair.
Abnormal oil consumption	Crankcase breather or line blocked.	Inspect and repair.
	Valve stem seals worn	Replace valve stem seals.
	Valve guides worn.	Replace valve guides.
	Piston rings worn; cylinders scored.	Test compression **(See "CYLINDER COMPRESSION TEST" on page 53.)**
Excessive vibration at any speed.	Worn or broken engine mountings.	Inspect, repair or replace.
	Drive shaft out off balance.	Balance or replace.
Black smoke from exhaust.	Inlet system restricted.	Service and repair inlet system.
	Incorrect grade of fuel.	Reset valve clearance.
	Worn fuel delivery nozzles.	Replace fuel delivery nozzles **(See Remove and Install Fuel Delivery Nozzles in CHAPTER 4, SECTION 8 in repair manual).**

Symptom	Problem	Solution
White smoke from exhaust.	Engine running too cold.	Check that thermostats are not stuck open.
	Worn fuel delivery nozzles.	Replace fuel delivery nozzles **(See Remove and Install Fuel Delivery Nozzles in CHAPTER 4, SECTION 8 in repair manual).**
	Pistons, rings or liners scored.	Test compression **(See "CYLINDER COMPRESSION TEST" on page 53.)**
	Coolant entering cylinder bores.	Check cylinder head gasket. Replace cylinder head gasket. **(See Cylinder Head in CHAPTER 4, SECTION 6 in repair manual).**
	Cold start solenoid defective.	Test solenoid. **(See "COLD START CIRCUIT THEORY OF OPERATION" on page 60.)**

LEFT BLANK INTENTIONALLY

CHAPTER 2. ENGINE

SECTION 3. ADJUSTMENTS

DISPLAY MENU TACHOMETER

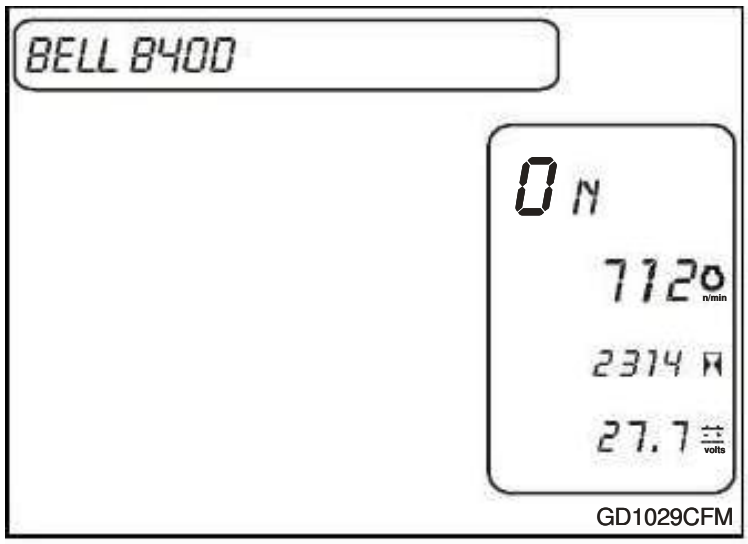

The tachometer on the Menu Display Unit is accurate enough for test work. **(See Operators Manual CHAPTER 2 for more information and CHAPTER 8 for detail operating the Menu Display Unit)**.

SLOW AND FAST IDLE ADJUSTMENT

There is no slow or fast idle adjustment. If slow or fast idle is not within specification, check for an engine mechanical problem or an electrical failure.

Slow Idle Speed RPM's- - - - - - - - - - - - - - - - -600 ± 20

Fast Idle Speed RPM's - - - - - - - - - - - - - - - -2240 ± 20

If no mechanical failure is found and the controller is suspected, **See "ENGINE CONTROL UNIT CIRCUIT THEORY OF OPERATION" on page 64 and "ELECTRONIC UNIT INJECTOR CONTROLLER CIRCUIT THEORY OF OPERATION" on page 62.**

VALVE CLEARANCE ADJUSTMENT

⚠ CAUTION

To prevent accidental starting of the engine while performing valve adjustments, always turn battery disconnect switch to "OFF"

NOTE: Check and adjust valve clearance only when engine is COLD.

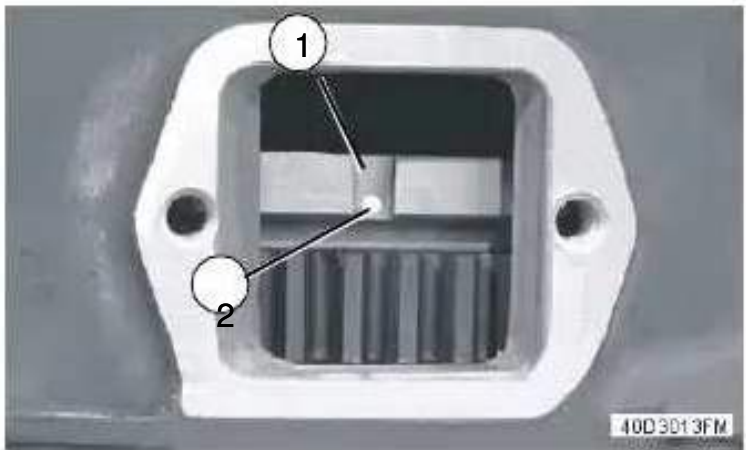

Remove rocker arm cover.

Install cranking device DC280088.

There is 37 slots (1) machined in the flywheel. One slot has a dimple in it. This is the TDC timing mark. Turn engine in the direction of rotation until TDC timing mark (2) on flywheel lines up in centre of the window in timing case.

NOTE: All valves can be adjusted in two crankshaft positions.

Rocker arms and push rods for number one cylinder should be loose. If not, rotate engine 360°. Engine must be at TDC on the compression stroke for number one cylinder.

NOTE: When adjusting valve clearance, the bolt on the valve bridge should on no account be loosened.

Measure the valve clearance between the rocker arm and the valve bridge with a feeler gauge.

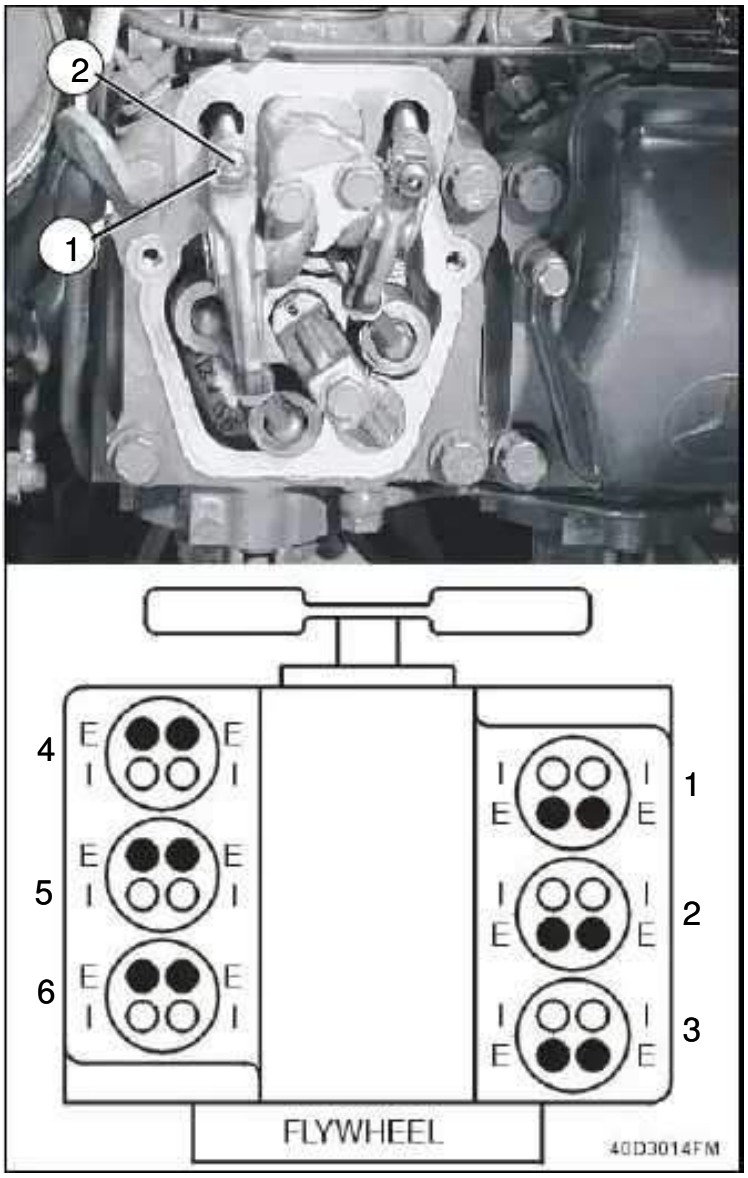

With number one cylinder on TDC, Check the valve clearance on cylinder one - intake and exhaust, cylinder two - exhaust, cylinder three - intake, cylinder four - exhaust and cylinder six - intake.

Crank engine until cylinder five is on TDC (cylinder one valve overlap).

Check valve clearance on cylinder two - intake, cylinder three - exhaust, cylinder four - intake, cylinder five - intake and exhaust and cylinder six - exhaust.

Intake Valve Clearance - - - - - - - - -0.40 mm (0.016in.)

Exhaust Valve Clearance- - - - - - - -0.60 mm (0.024in.)

Locknut tightening torque- - - - - - - - - -50Nm (37 lb-ft)

To adjust clearance: Loosen locknut (1) and turn adjusting screw (2) in or out depending on gap to big or small.

Tighten locknut to specification while holding adjusting screw in position.

Adjust valves in same order used for checking. Check clearance again after tightening locknut.

EXHAUST BRAKE ADJUSTMENT

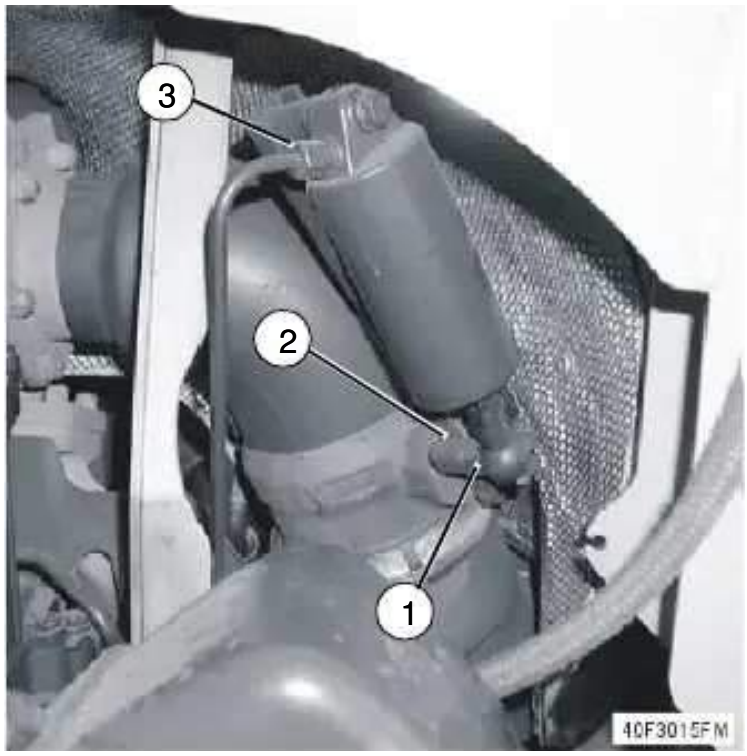

With engine off, check the clearance between the control arm (1) and the stop (2). In the brake valve "**OFF**" position, the control arm should be resting on the stop.

Disconnect the air line (3) from the cylinder. Connect a regulated air supply line to the cylinder. Regulate air pressure so pressure is approximately 740 - 810 kPa (7.4 - 8.1 bar) (107 - 117 psi).

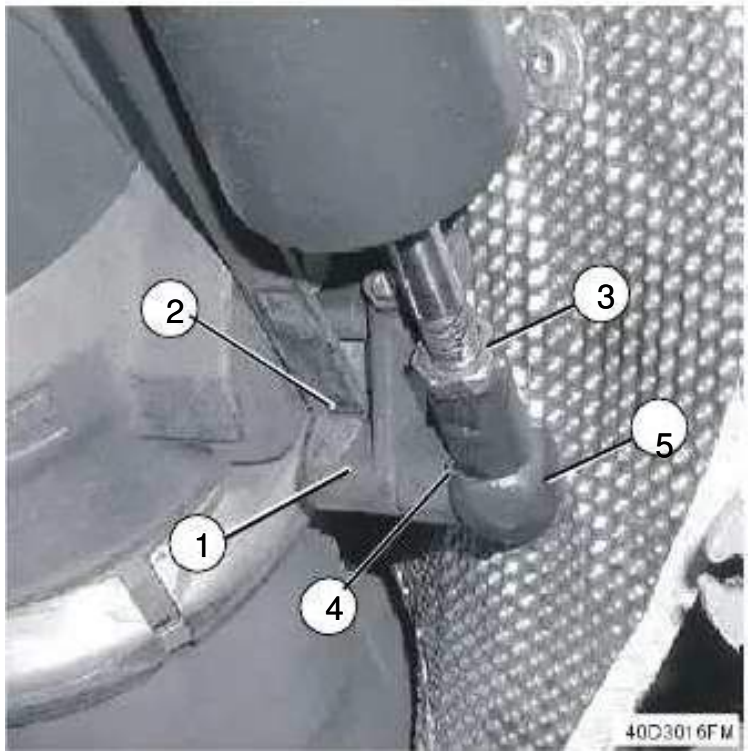

Check control arm (1) to stop (2) clearance. The control arm must not rest on the stop. There must be slight clearance between the control arm and stop to ensure that exhaust brake is fully closed.

If adjustment is needed, loosen locknut (3), remove clip (4) and disconnect cylinder from control arm. Turn rod end (5) for adjustment.

LEFT BLANK INTENTIONALLY

CHAPTER 2. ENGINE

SECTION 4. TESTS

CYLINDER COMPRESSION TEST

NOTE: Compression pressures are affected by the cranking speed of the engine. Before beginning the test, ensure that the batteries are fully charged and the starter motor is in a good working condition.

Remove fuel delivery nozzle from cylinder being tested. **See CHAPTER 4, SECTION 8 of repair Manual Remove and Install Fuel Delivery Nozzle**.

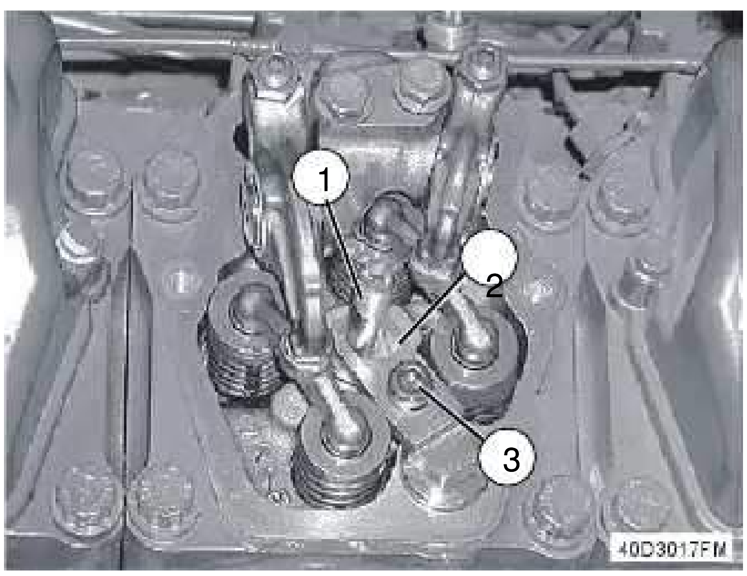

Install JDG1599 compression tester adapter (1) into cylinder head.

Install holddown clamp (2) using an M10 x 1.5 x 70 mm long cap screw (3).

Install compression tester to adapter.

CAUTION

Engine must not be started with fuel line from EUI disconnected. Remove the F16 ECU/EUI Power Relay fuse to prevent engine from starting.

Remove the F16 ECU/EUI Power Relay Fuse.

Crank engine approximately ten seconds. Record readings and compare to specification.

Engine Compression Pressure -2800kPa (28 bar) (406 psi)

Permissible Difference Between Cylinders - 400kPa (4 bar) (58psi).

FUEL PUMP PRESSURE TEST

Specification

Pressure At Slow Idle - 210 -300 kPa (2.1 - 3 bar) (30 - 44psi).

Pressure At Fast Idle - - - 500 - 600kPa (5 - 6 bar) (73 - 87psi).

Essential Tools

Parker No. 34982-16-6: Banjo Union.

Parker No. 0502-12-12: 1 1/16 - 12M x 3/4 - 14NPT F Adapter.

Parker No. 3/4 x 1/2 PTR: 3/4 - 14 NPT M x 1/2 - 14 NPT F Pipe Thread Reducer.

Parker No. 1/2 x 3/8 PTR: 1/2 - 14 NPT M x 3/8 - 18 NPT F Pipe Thread Reducer.

Parker No. 30182-6-6: 3/8 - 18 NPT M x 3/8 Barb Fitting.

Service Equipment And Tools

JT07148 Digital Hydraulic Tester.

JT07156 0.5 to 15 GPM Lt. Flow Meter.

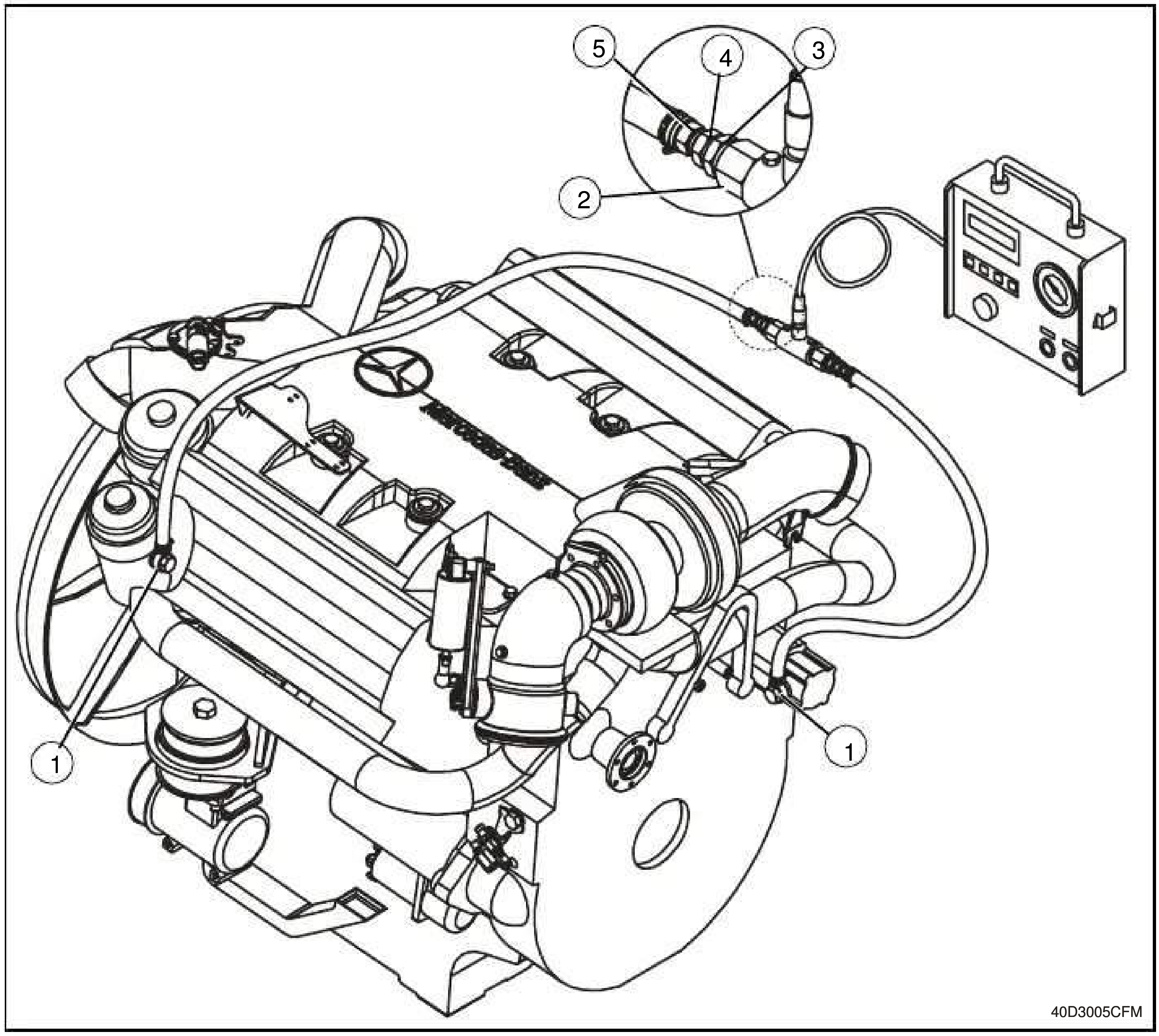

Connect banjo union fittings (1) to fuel pump outlet port and fuel filter inlet.

Connect fittings (2 - 5) to flow meter and flow meter to hydraulic tester.

Run engine at slow idle and measure fuel pump pressure. Compare to specification.

Run engine at fast idle and compare to specification.

OIL PUMP PRESSURE TEST

Specification

Engine Oil Pressure at Slow Idle- 50kPa (0.5 bar) (7.3psi).

Engine Oil Pressure at Fast Idle -250 kPa (2.5 bar) (36.3psi).

Essential Tools

Parker No. 8M16F80MX: M 16 x 1.5 M x 3/4 - 16 M 37 ° Adapter.

JT03132: 3/4 - 16 M 37 ° x 3/4 - 16 F 37 ° Sw 90 ° Elbow.

JT03003: 7/16 - 20 M 37 ° x 3/4 - 16 F 37 ° Reducer.

Service Equipment And Tools

413 kPa (4.1 bar) (60psi) Gauge.

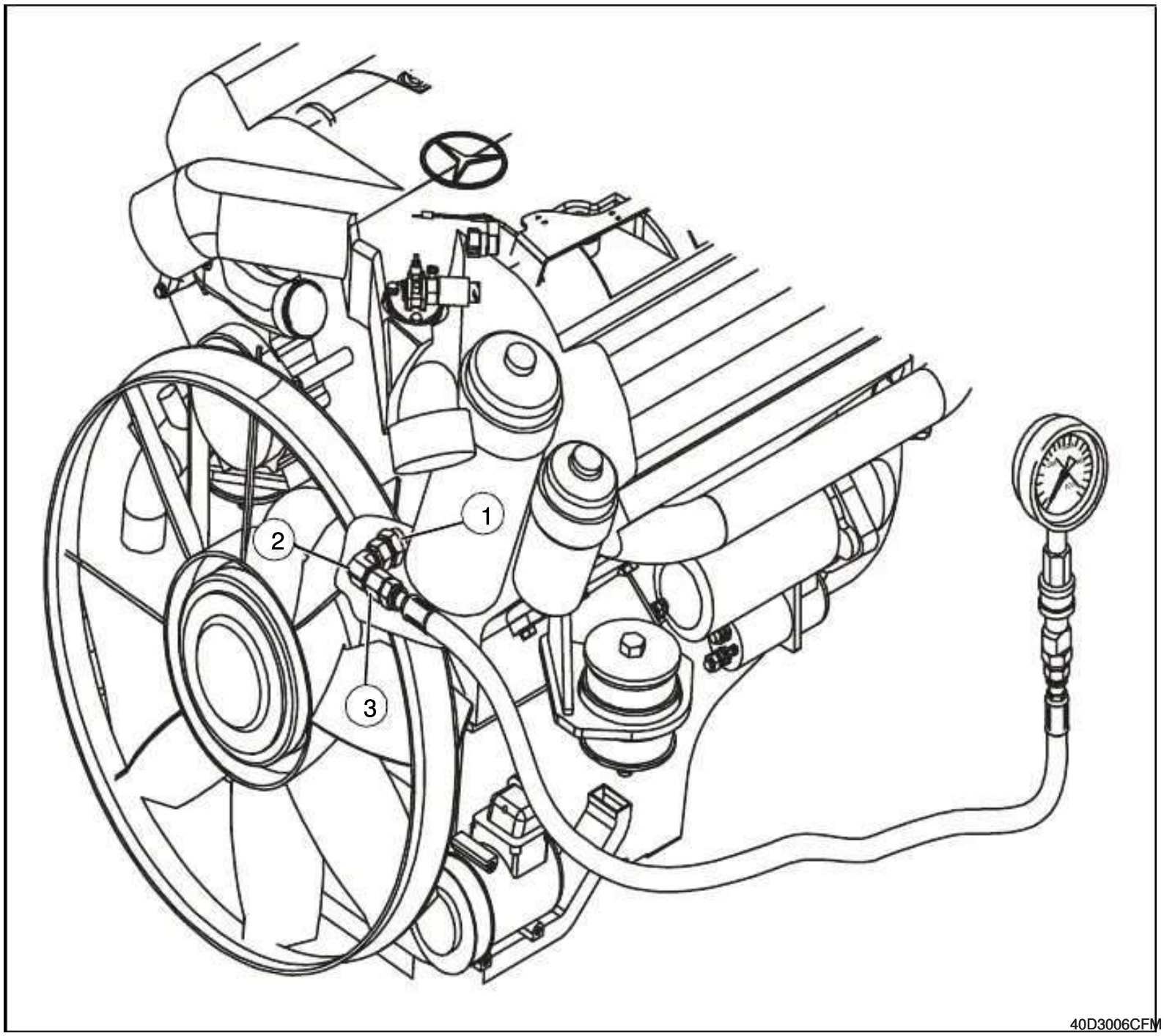

Remove engine oil pressure sensor. **(See "Engine Main Harness" on page 14).**

Install adapter (1), elbow (2) and reducer (3) to engine and connect gauges to fittings.

NOTE: To achieve an accurate oil pressure reading, warm engine to 105° C (220° F).

Run engine at slow idle. Compare reading to specification.

Run engine at fast idle. Compare reading to specification.

LEFT BLANK INTENTIONALLY

CHAPTER 3. ELECTRICAL SYSTEM

SECTION 1. SYSTEM INFORMATION

Electrical Schematic Symbols

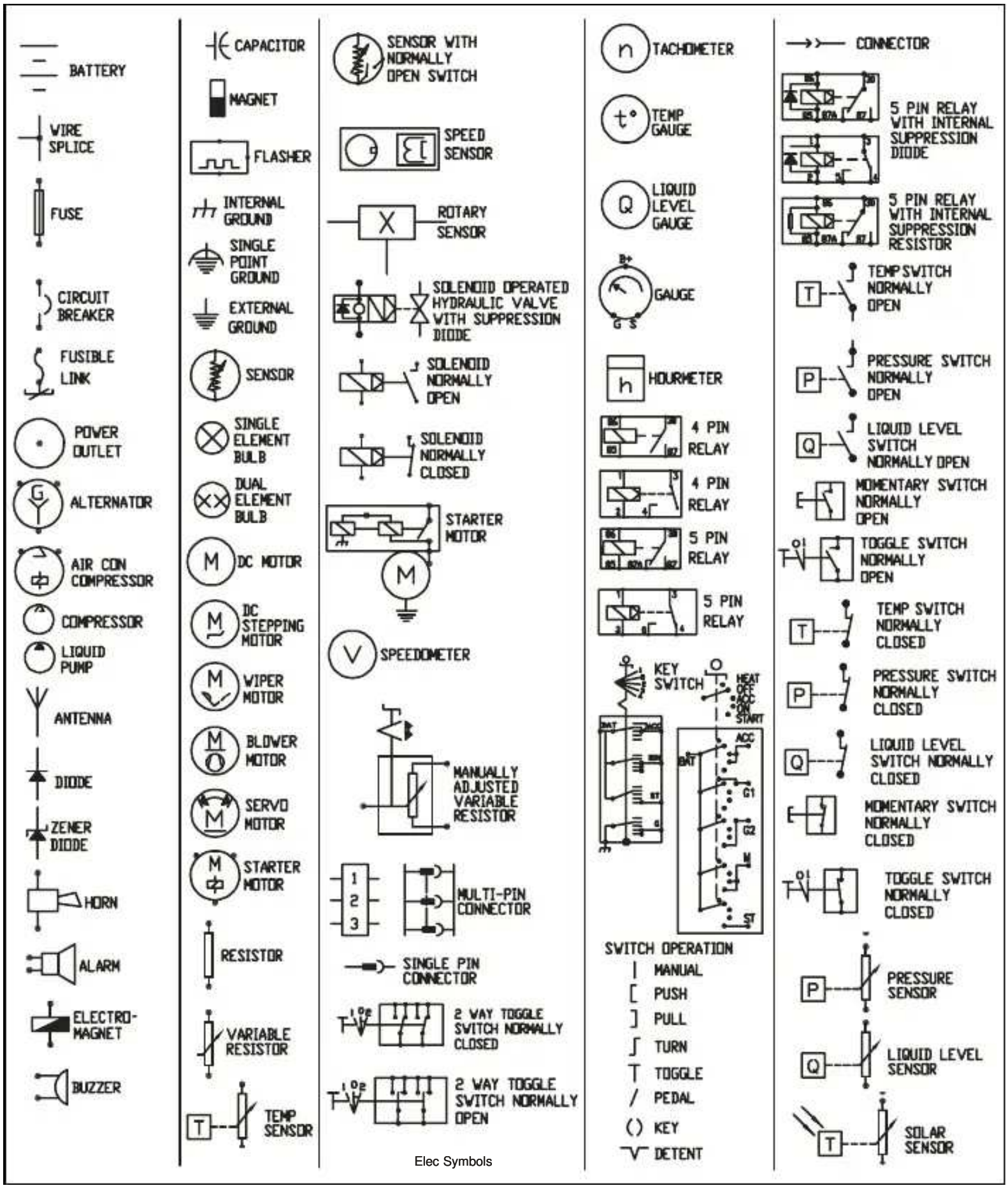

Elec Symbols

HARNESSES AND COMPONENT LOCATION

Main Power Harness

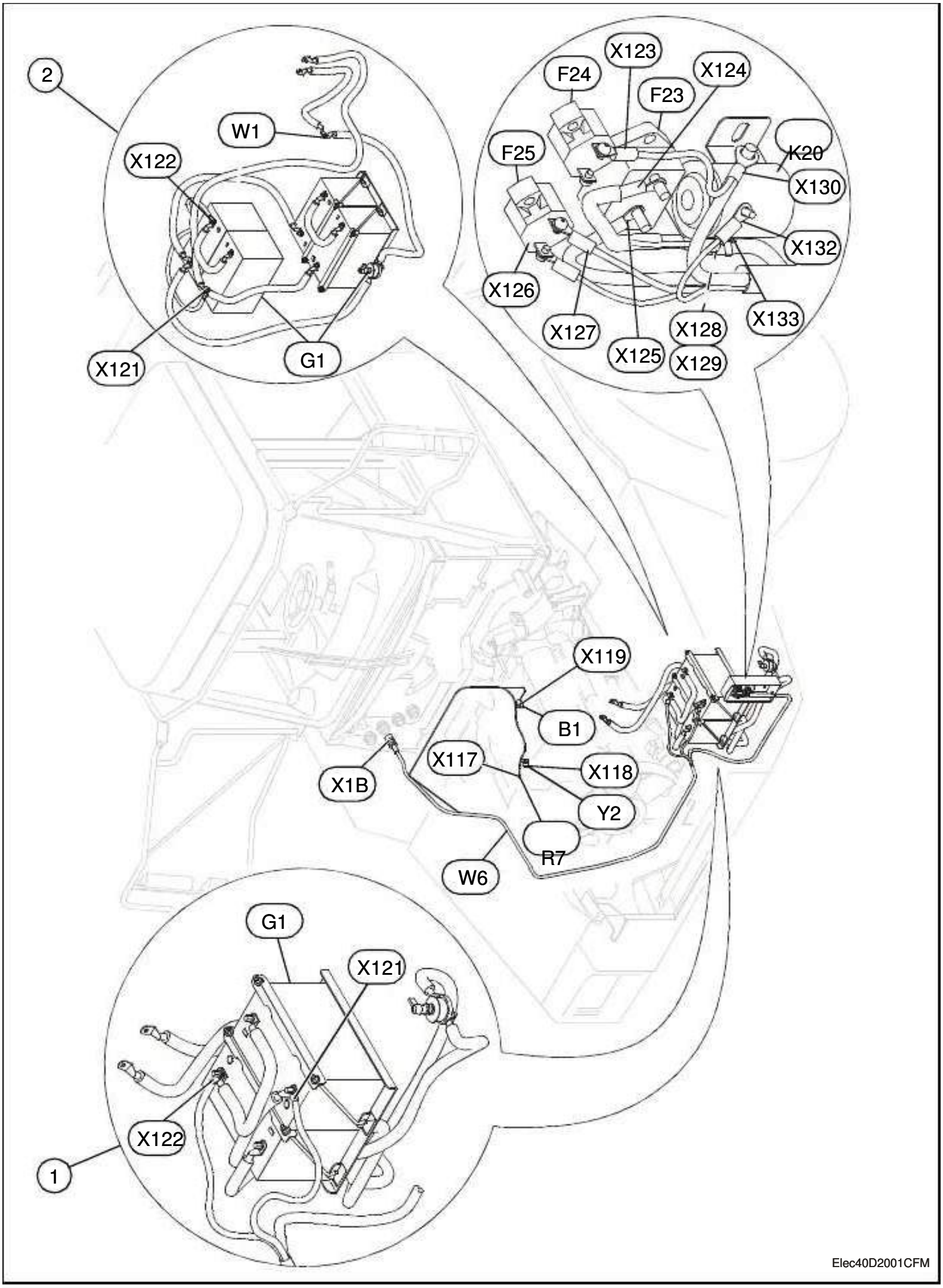

1 Detail of 2-Battery Configuration (Front View).
2 Detail of Optional 4-Battery Configuration (Rear View).
B1 Cold Start Temperature Sensor.
F23 Main Circuit Breaker (60-Amp).
F24 Fuel Filter Heater, Unloader Valve Heater and Low Coolant Level Circuit Breaker (20-Amp).
F25 Battery Balancer Circuit Breaker (20-Amp).
G1 Batteries (2 used; standard) (4 used; optional).
K20 Battery Relay.
R7 Glow Plug.
W1 Main Ground.
W6 Main Power Harness.
X1B Main Power Harness-to-Cab Power Harness Connector.
X117 Glow Plug Connector.
X118 Cold Start Solenoid (Y2) Connector.
X119 Cold Start Temperature Sensor (B1) Connector.
X121 Battery (G1) 24-Volt Connector.
X122 Battery (G1) 12-Volt Connector.
X123 Circuit Breaker (F24) Connector.
X124 Main Circuit Breaker (F23) Connector.
X125 Main Circuit Breaker (F23) Connector.
X126 Circuit Breaker (F25) Connector.
X127 Circuit Breaker (F25) Connector.
X128 Battery Relay (K20) Terminal 30 (Contact) Connector.
X129 Battery Relay (K20) Terminal 30 (Contact) Connector.
X130 Battery Relay (K20) Terminal 87 (Contact) Connector.
X132 Battery Relay (K20) Connector Terminal 86 (Coil) Connector.
X133 Battery Relay (K20) Terminal 85 (Coil) Connector.

Front Frame/Engine Harness

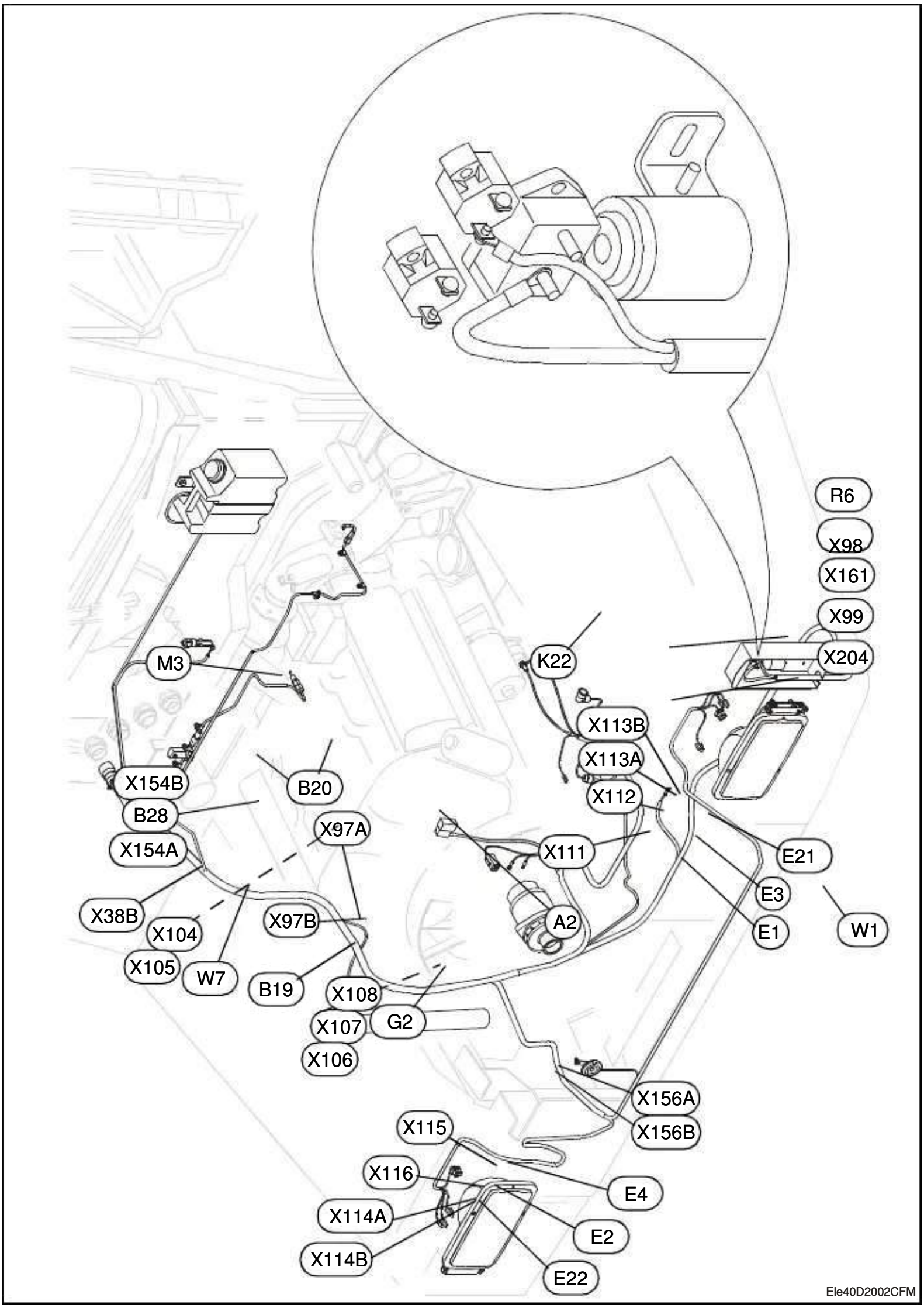

A2 Electronic Unit Injector (EUI) Controller.
B19 Fuel Level Sensor.
B20 Engine Coolant Low Level Sensor.
B28 Stop Light Pressure Switch.
E1 Left Front Park Light.
E2 Right Front Park Light.
E3 Left Headlight.
E4 Right Headlight.
E21 Left Front Turn Signal.
E22 Right Front Turn Signal.
G2 Alternator.
M3 Washer Pump Motor.
R5 Unloader Valve Heater.???
R6 Fuel Filter Heater (Optional).???
W1 Main Ground.???
W7 Front Frame/Engine Harness.
K22 Transmission Cooler Fan Relay.
X38B Front Frame/Engine Harness-to-Cab Main Harness Connector.
X96 Engine Coolant Low Level Sensor (B20) Connector.
X97A Fuel Sensor (B19) (Signal) Connector.
X97B Fuel Sensor (B19) (Ground) Connector.
X98 Unloader Valve Heater (R5) Connector.
X99 Air System Drain Solenoid (Y16) Connector.
X103 A/C Compressor Clutch (Y20) Connector.
X104 Starter Solenoid (BK/WH Wire) Connector.
X105 Alternator B+ to Starter Solenoid (GN) Wire Connector.
X106 Electronic Unit Injector Controller (A2) 16-Pin Connector.
X107 Alternator (G2) B+ Terminal Connector.
X108 Alternator (G2) Ground Terminal Connector.
X111 Left Front Park Light (E1) Connector.
X112 Left Headlight (E3) Connector.
X113A Left Front Turn Signal Light (E21) (Positive) Connector.
X113B Left Front Turn Signal Light (E21) (Ground) Connector.
X114A Right Front Turn Signal Light (E22) (Positive) Connector.
X114B Right Front Turn Signal Light (E22) (Ground) Connector.
X115 Right Headlight (E4) Connector.
X116 Right Front Park Light (E2) Connector.
X154A Stop Light Pressure Switch (B28) (GY/GN Wire) Connector.
X154B Stop Light Pressure Switch (B28) (GN Wire) Connector.
X155 Washer Pump Motor (M3) Connector.
X161 Optional Fuel Filter Heater (R6) Connector.
X156A Electric Horn (B27) Connector.
X156B Electric Horn (B27) (Ground) Connector.
X204 Alternator (G2) 5-Pin Connector.
Y16 Air System Drain Solenoid.
Y20 A/C Compressor Clutch.

Engine Main Harness

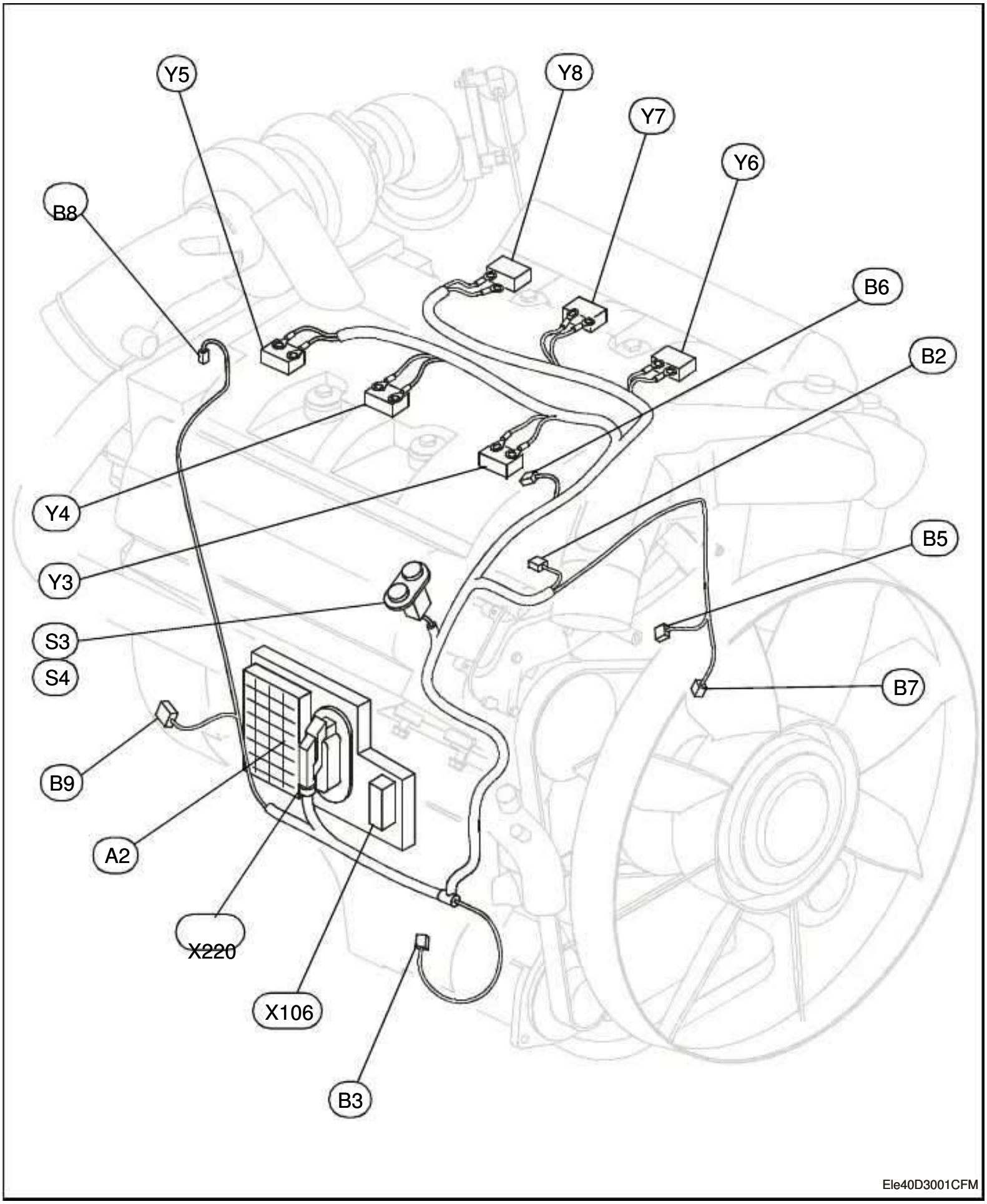

A2 Electronic Unit Injector (EUI) Controller.
B2 Engine Coolant Temperature Sensor.
B3 Engine Oil Level Sensor.
B5 Engine Oil Pressure Sensor.
B6 Intake Manifold Air Pressure/Temperature Sensor.
B7 Engine Oil Temperature Sensor.
B8 Engine Camshaft Position Sensor.
B9 Engine Crankshaft Position Sensor.
S3 Engine Remote Start Switch (Disabled).
S4 Engine Remote Stop Switch.
X106 Electronic Unit Injector Controller 16-Pin Connector.
X220 Electronic Unit Injector Controller 55-Pin Connector.
Y3 Electronic Unit Injector Solenoid (Cyl #1).
Y4 Electronic Unit Injector Solenoid (Cyl #2).
Y5 Electronic Unit Injector Solenoid (Cyl #3).
Y6 Electronic Unit Injector Solenoid (Cyl #4).
Y7 Electronic Unit Injector Solenoid (Cyl #5).
Y8 Electronic Unit Injector Solenoid (Cyl #6).

Cab Power Harness

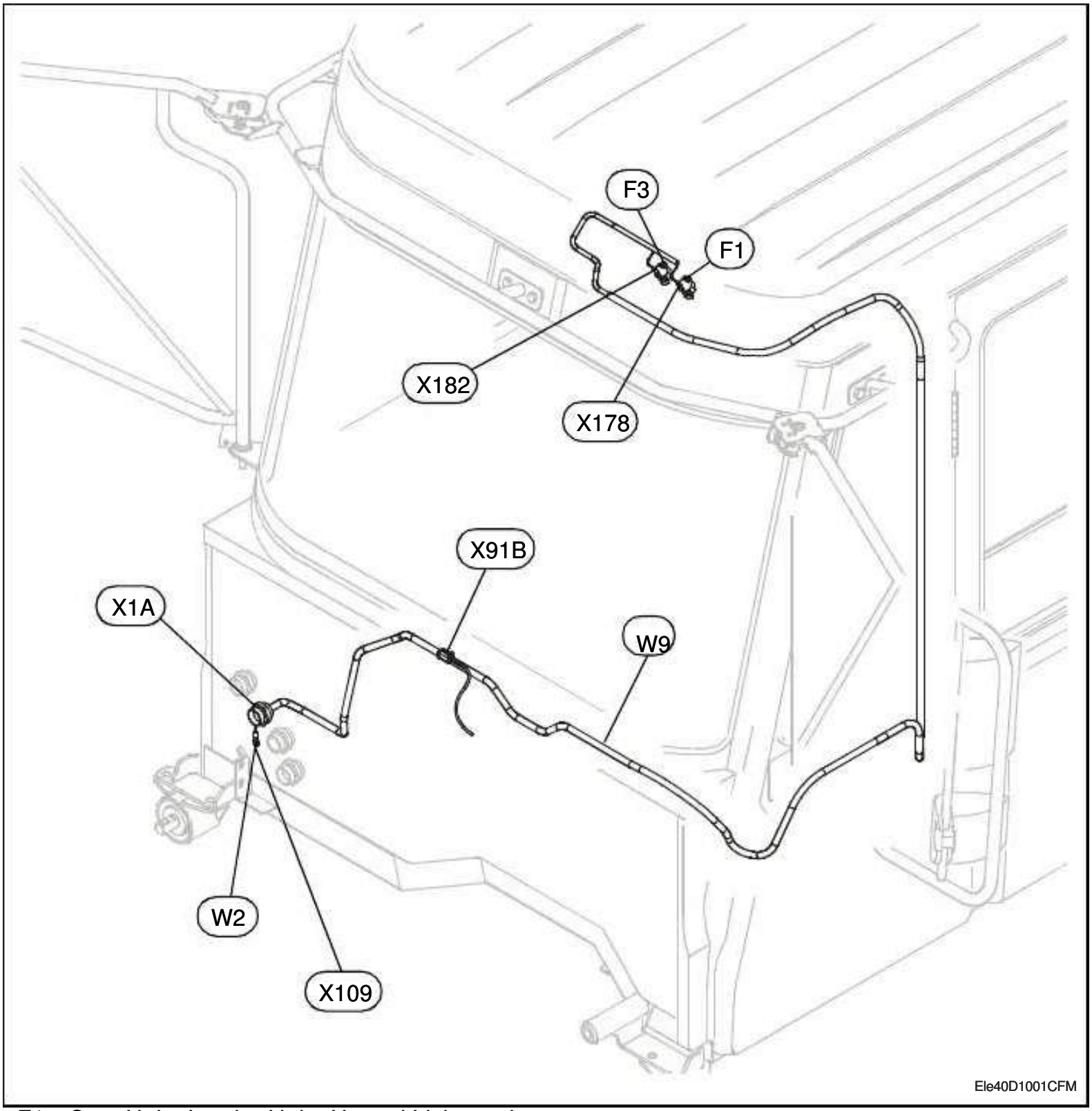

F1 Stop Light, Interior Light, Hazard Light, and Turn Signal Circuit Breaker (15-Amp).
F3 Switched Power to Fuses F11, F14—F16 Circuit Breaker (20-Amp).
W2 Cab Firewall Ground.
W9 Cab Power Harness.

X1A Main Power Harness-to-Cab Power Harness Connector.
X91B Cold Start and Run Circuits Power Connector.
X109 Cab Firewall Ground Connector.
X178 Circuit Breaker (F1) Connector.
X182 Circuit Breaker (F3) Connector.

Cab Main Harness And Electric Mirror Interface Harness

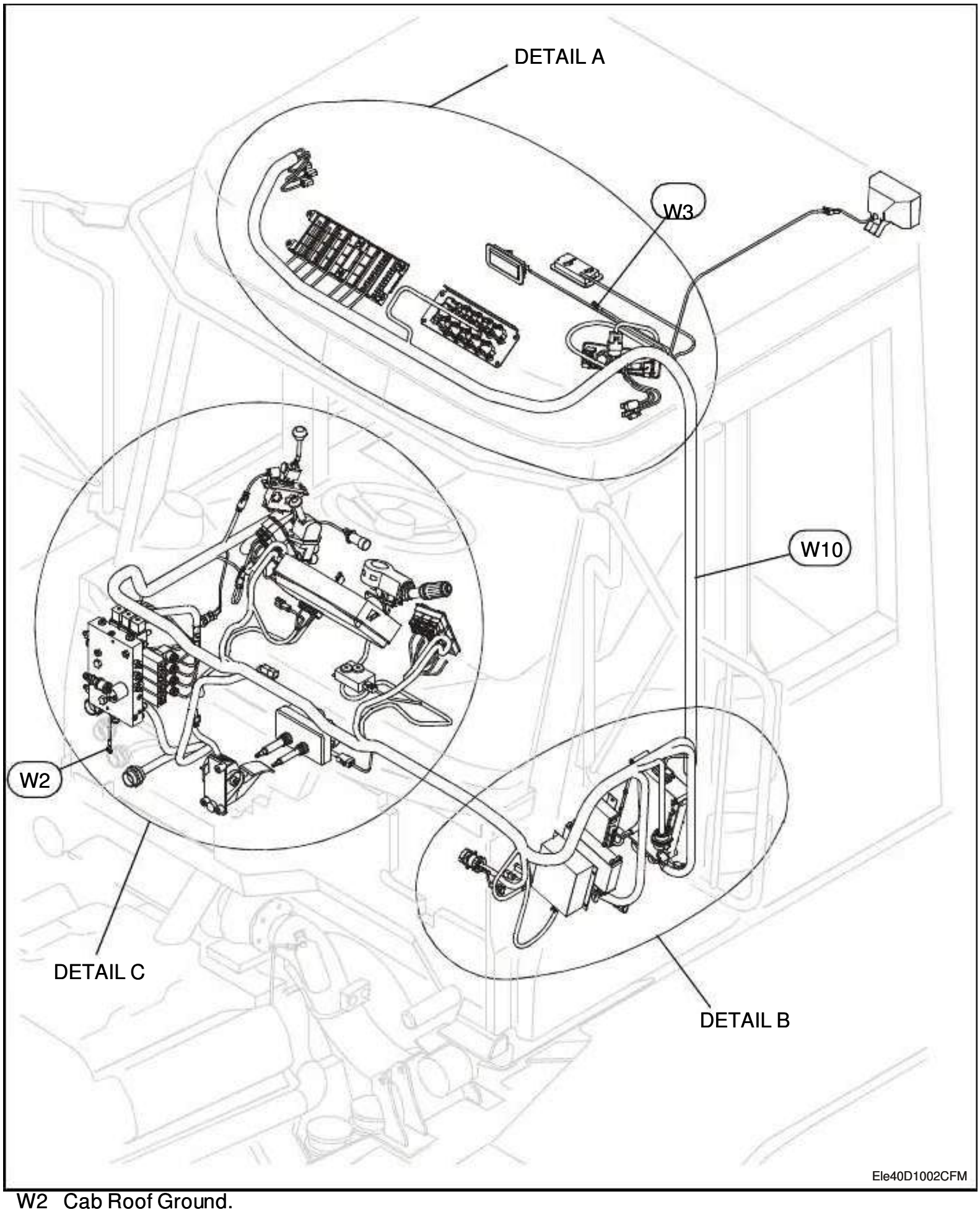

W2 Cab Roof Ground.
W3 Cab Firewall Ground.
W10 Cab Main Harness.

Cab Main Harness And Electric Mirror Interface Harness (Continues)

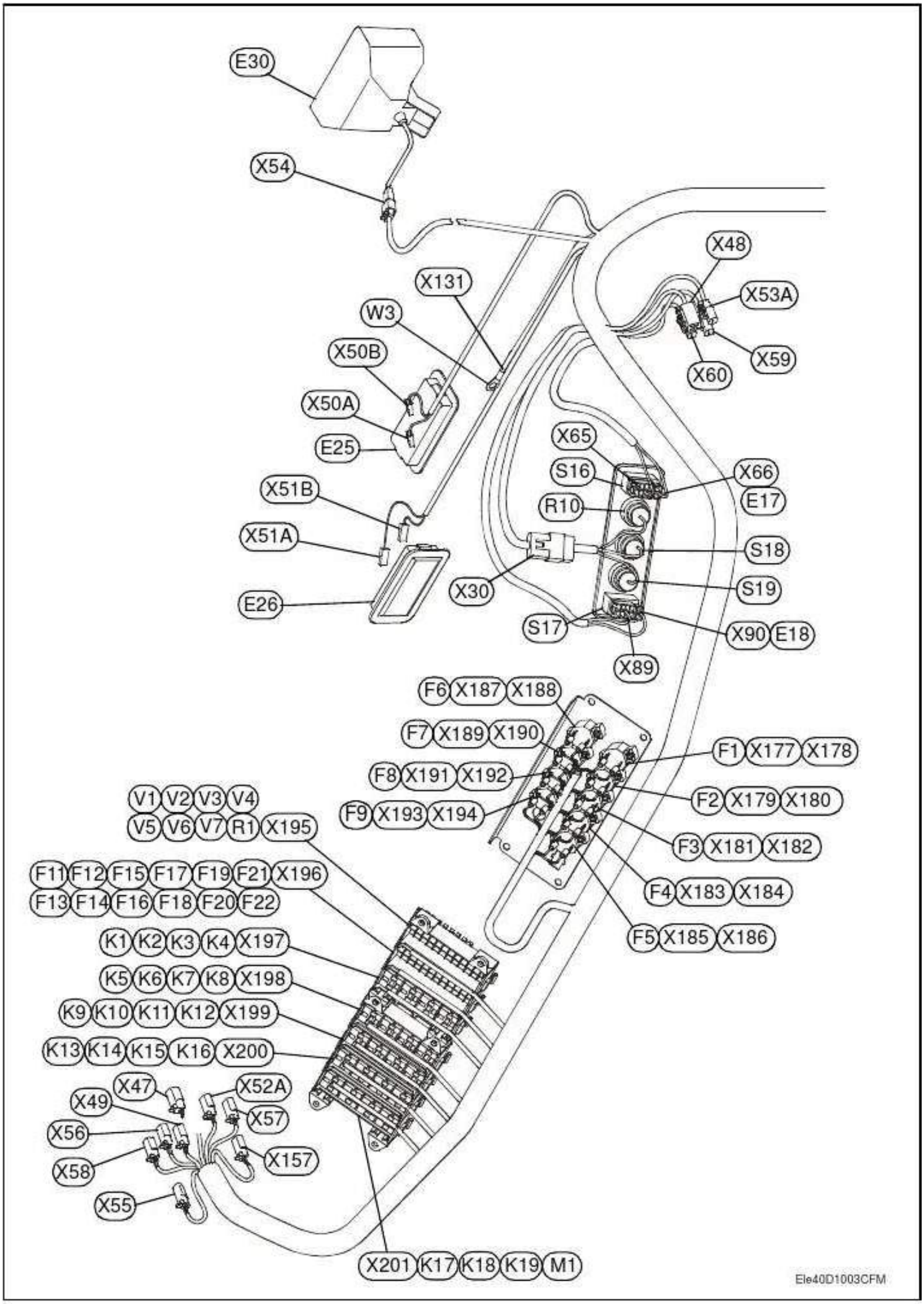

E17 Backlight (A/C On/Off Switch).
E18 Backlight (Air Re circulation Switch).
E25 Dome Light.
E26 Fuse/Relay Compartment Light.
E30 Articulation Backup Light.
F1 Circuit Breaker - Stop Light, Interior Light, Hazard Light and Turn Signal (15-Amp) (SE9).
F2 Circuit Breaker - Unswitched Power to Fuses F12, F13, F18 - F21 (30-Amp).
F3 Circuit Breaker - Switched Power to Fuses F11 and F14 — F16 (20-Amp) (SE1).
F4 Circuit Breaker - Headlight, Work Light, Backup Light and Beacon (30-Amp).
F5 Circuit Breaker - Headlight and A/C (25-Amp).
F6 Circuit Breaker - Park Brake, Differential Lock, Fan Drive, Body Down Detent, and Range Hold (15-Amp).
F7 Circuit Breaker - Wiper, Washer, Horn, and Mirror (25-Amp) (SE7) (W10).
F8 Circuit Breaker - Cold Start (25-Amp) (SE2) (W10).
F9 Circuit Breaker - Start, Neutral, MDU/CCU Power, Exhaust Brake and Body Float (15-Amp).
F11 Retarder/Voltage Regulator Fuse (10-Amp).
F12 Transmission Control Unit (TCU) Fuse (10-Amp).
F13 MDU/CCU Power and Hazard Fuse (5-Amp).
F14 Alternator Excitation Fuse (5-Amp).
F15 Program/Diagnostic Fuse (10-Amp).
F16 ECU/EUI Power Relay Fuse (10-Amp).
F17 AM/FM Radio Fuse (10-Amp).
F18 ECU Fuse (10-Amp).
F19 MDU Fuse (5-Amp).
F20 Diagnostic Fuse (10-Amp).
F21 Battery Balancer/Accessories Fuse (10-Amp).
F22 2-Way Radio Fuse (15-Amp).
K1 Neutral Start Relay.
K2 Start Relay.
K3 Headlights and A/C Cutout Relay.
K4 Backup Relay.
K5 Stop Light Relay.
K6 Exhaust Brake Relay.
K7 Park Brake Relay.
K8 Range Hold Relay.
K9 Left Turn Relay.
K10 Right Turn Relay.
K11 Low Beam Relay.
K12 High Beam Relay.
K13 Body Float Relay.
K14 Intermittent Wiper Relay.
K15 Accessory Relay.
K16 ECU/EUI Power Relay.
K17 MDU/CCI Power Relay.
K18 Blank Relay Socket.
K19 Auxiliary Relay Socket.
N1 Retarder Voltage Regulator.
R1 Air Pressure Sensor Pull-Up Resistor.
R10 Temperature Control.
S16 Air Conditioning On/Off Switch.
S17 Air Re circulation Switch.
S18 Blower Motor Speed Control Switch.
S19 Air Flow Control Switch.
V1 Retarder Stop Light Control Diode (3-Amp).
V2 Stop Light Control Diode (3-Amp).
V3 Alternator Excitation Diode (3-Amp).
V4 Intermittent Wiper Control Diode (3-Amp).
V5 Washer/Wiper Control Diode (3-Amp).
V6 Hazard Control Diode (3-Amp).
V7 MDU/CCU Power Diode (3-Amp).

Cab Main Harness And Electric Mirror Interface Harness (Continues)

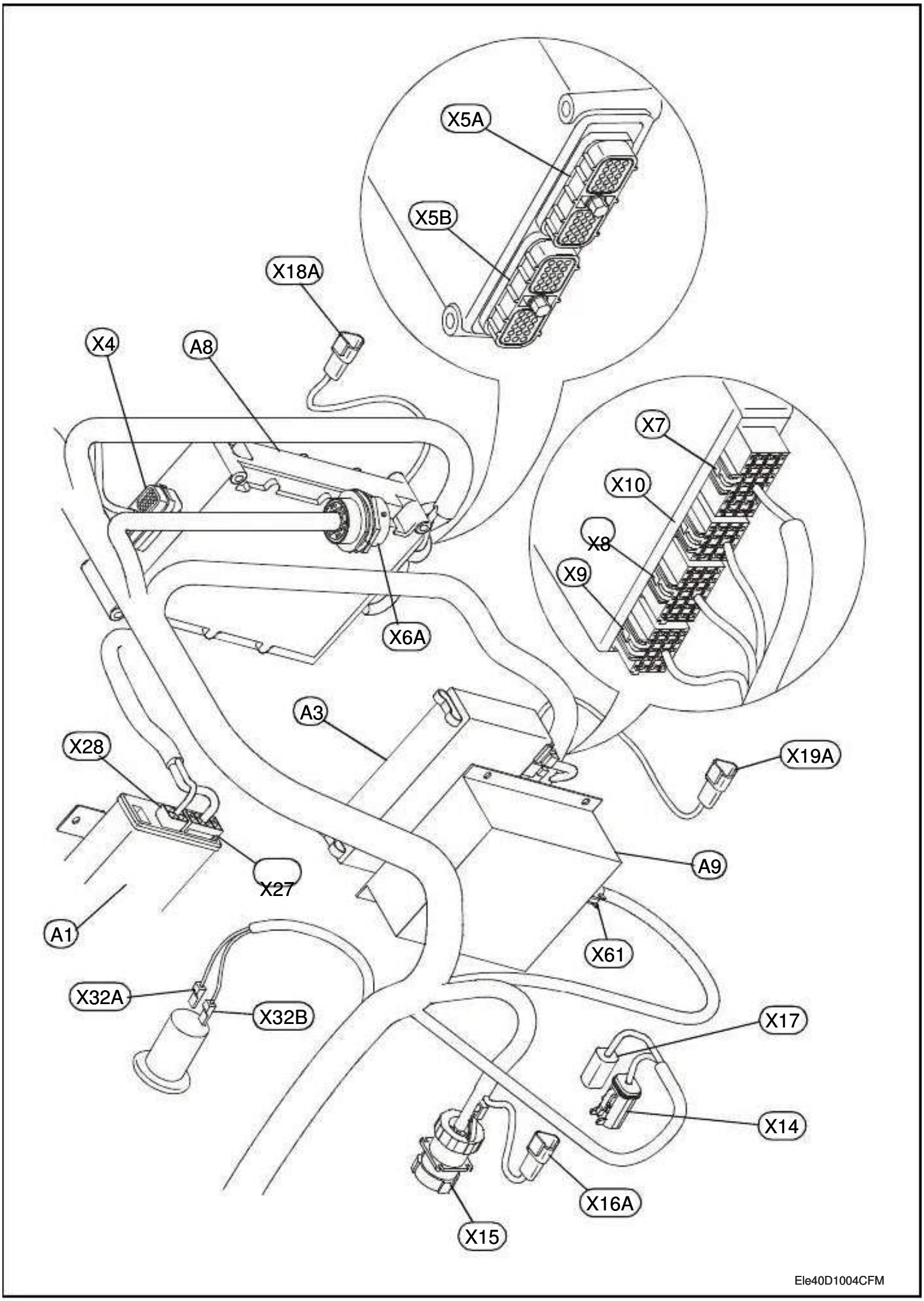

A1 Cold Start Module.
A3 Engine Control Unit (ECU).
A8 Chassis Control Unit (CCU).
A9 Battery Balancer.
X4 Chassis Control Unit (A8) J3 Connector.
X5A Chassis Control Unit (A8) J1A Connector.
X5B Chassis Control Unit (A8) J1L Connector.
X6A Transmission Control Harness-to-Cab Main Harness Connector.
X7 Engine Control Unit (A3) 21-Pin Connector.
X8 Engine Control Unit (A3) 18-Pin Connector.
X9 Engine Control Unit (A3) 15-Pin Connector.
X10 Engine Control Unit (A3) 12-Pin Connector.
X14 Monitor Display Unit (H2) Programming 4 Pin Connector.
X15 Diagnostic (Service ADVISOR ™) Connector.
X16A Diagnostic CAN Connector.
X17 Chassis Control Unit (A8) Programming 6-Pin Connector.
X18A Chassis Control Unit (A8) CAN Connector.
X19A Engine Control Unit (A3) CAN Connector.
X27 Cold Start Module (A1) 8-Pin Connector.
X28 Cold Start Module (A1) 4-Pin Connector.
X31 Battery Balancer (A9) Connector.
X32A 12-Volt Accessory Power Socket Connector.
X32B 12-Volt Accessory Power Socket Ground Connector.

Cab Main Harness And Electric Mirror Interface Harness (Continues)

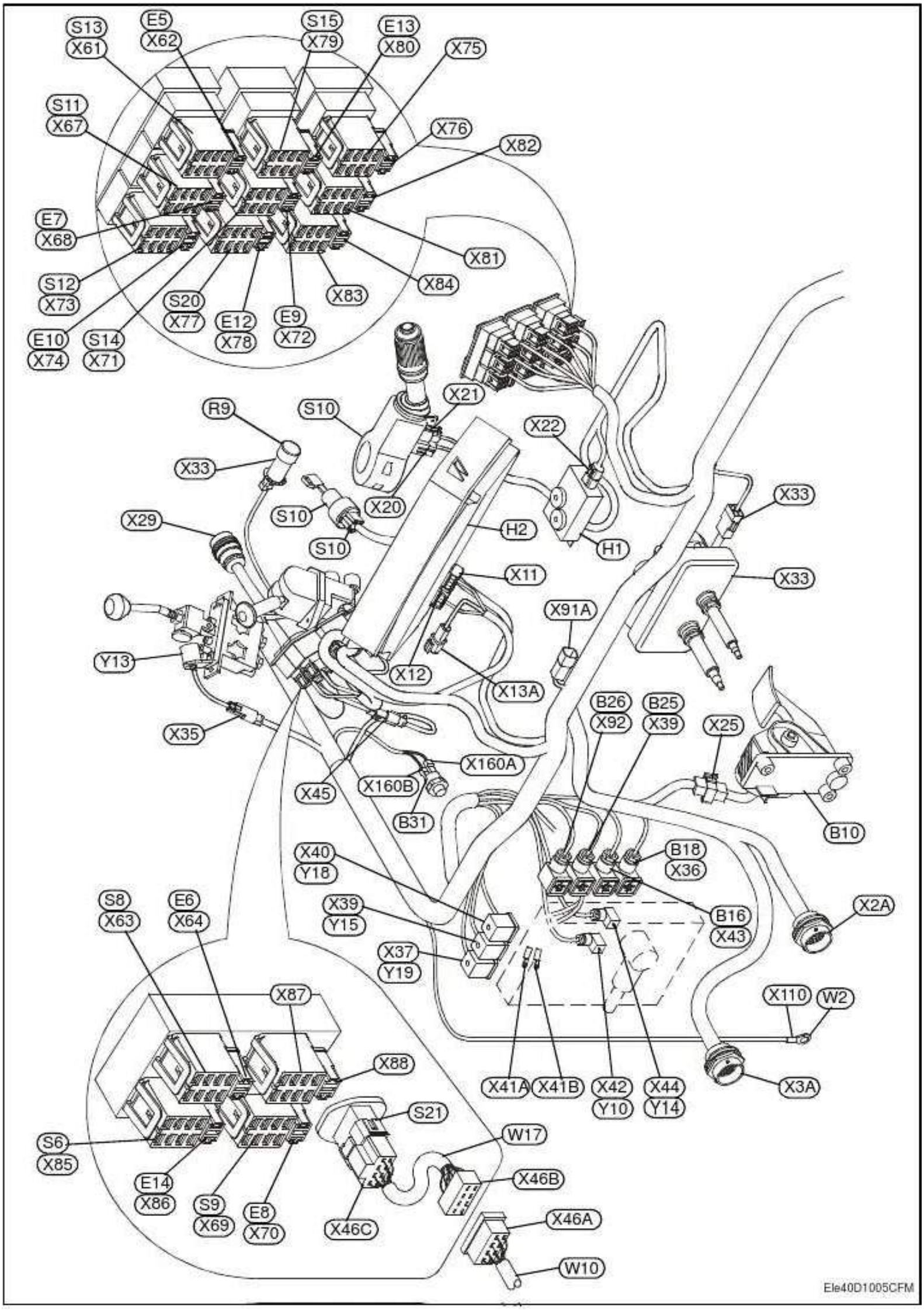

B10 Accelerator Pedal Position Sensor.
B16 Body Up Pressure Switch.
B18 Park Brake Pressure Switch.
B25 Inter-Axle Lock Pressure Switch.
B26 Differential Lock Pressure Switch.
B31 Air Conditioning High/Low Pressure Switch.
E5 Backlight (Interior Light Switch).
E6 Backlight (Inter-Axle Lock Switch).
E7 Backlight (Headlight Switch).
E8 Backlight (Differential Lock Switch).
E9 Backlight (Rotating Beacon Switch).
E10 Backlight (Hazard Light Switch).
E12 Backlight (Mirror Defroster Switch).
E13 Backlight (Work Light Switch).
E14 Backlight (Range Hold Switch).
H1 Audible Alarm.
H2 Menu Display Unit (MDU).
M2 Wiper Motor.
R9 Lighter.
S1 Key Switch.
S6 Range Hold Switch.
S7 Park Brake Latch Switch.
S8 Inter-Axle Lock Switch.
S9 Differential Lock Switch.
S10 Steering Column Switch.
S11 Headlight Switch.
S12 4-Way Flasher Switch.
S13 Interior Light Switch.
S14 Rotating Beacon Switch.
S15 Work Light Switch.
S20 Mirror Defroster Switch.
S21 Mirror Positioning Switch.
W2 Cab Firewall Ground.
W10 Cab Main Harness.
X2A Hydraulic Harness-to-Cab Main Harness Connector.
X3A Front Frame/Engine Harness-to-Cab Main Harness Connector.
X4 Chassis Control Unit (A8) J3 Connector.
X11 Monitor Display Unit (H2) 10-Pin Connector.
X12 Monitor Display Unit (H2) 6-Pin Connector.
X13 Monitor Display Unit (H2) CAN Connector.
X20 Steering Column Switch (S10) 12 - Pin Connector.
X21 Steering Column Switch (S10) 4-Pin Connector.
X22 Audible Alarm (H1) Connector.
X23 Wiper Motor (M2) Connector.
X25 Accelerator Pedal Position Sensor (B10) Connector.
X26 Key Switch (S1) Connector.
X29 Cab Main Harness-to-A/C Actuator Harness (W18) 21-pin Connector.
X33 Lighter (R9) Connector.
X34 Not Used.
X35 Body Down Detent Magnet (Y13) Connector.
X36 Park Brake Pressure Switch (B18) Connector.
X37 Air Horn Solenoid (Y19) Connector.
X38 Inter-Axle Lock Solenoid (Y15) Connector.
X39 Inter-Axle Lock Pressure Switch (B25) Connector.
X40 Differential Lock Solenoid (Y18) Connector.
X41A System Air Pressure Sensor (B15) Connector.
X41B System Air Pressure Sensor (B15) Connector.
X42 Exhaust Brake Solenoid (Y10) Connector.
X43 Body Up Pressure Switch (B16) Connector.
X44 Park Brake Solenoid (Y14) Connector.
X45 Park Brake Latch Switch (S7) Connector.
X46A Cab Harness-To-Mirror Positioning Switch Interface Harness Connector (W10).
X46B Mirror Positioning Switch Interface Harness-To-Cab Harness Connector (W10).
X46C Mirror Positioning Switch Connector (W10).
X61 Interior Light Switch (S13) Connector.
X62 Interior Light Switch Backlight (E5) Connector.
X63 Inter-Axle Lock Switch (S8) Connector.
X64 Inter-Axle Lock Switch Backlight (E6) Connector.
X67 Headlight Switch (S11) Connector.
X68 Headlight Switch Backlight (E7) Connector.
X69 Differential Lock Switch (S9) Connector.
X70 Differential Lock Switch Backlight (E8) Connector.

X71 Rotating Beacon Switch (S14) Connector.
X72 Rotating Beacon Switch Backlight (E9) Connector.
X73 4-Way Flasher Switch (S12) Connector.
X74 4-Way Flasher Switch Backlight (E10) Connector.
X75 Not Used.
X76 Not Used.
X77 Mirror Defroster Switch (S20) Connector.
X78 Mirror Defroster Switch Backlight (E12) Connector.
X79 Work Light Switch (S15) Connector.
X80 Work Light Switch Backlight (E13) Connector.
X81 Not Used.
X82 Not Used.
X83 Not Used.
X84 Not Used.
X85 Range Hold Switch (S6) Connector.
X86 Range Hold Switch Backlight (E14) Connector.
X87 Not Used
X88 Not Used.
X91A Cold Start and Run Circuits Power Connector.
X92 Differential Lock Pressure Switch (B26) Connector.
X110 Cab Firewall Ground (W2) Connector.
X160A Air Conditioning High/Low Pressure Switch (B31) Connector.
X160B Air Conditioning High/Low Pressure Switch (B31) Connector.
Y10 Exhaust Brake Solenoid.
Y13 Body Down Detent Magnet.
Y14 Park Brake Solenoid.
Y15 Inter-Axle Lock Solenoid.
Y18 Differential Lock Solenoid.
Y19 Air Horn Solenoid.

LEFT BLANK INTENTIONALLY

Controller Area Network (CAN) Harness

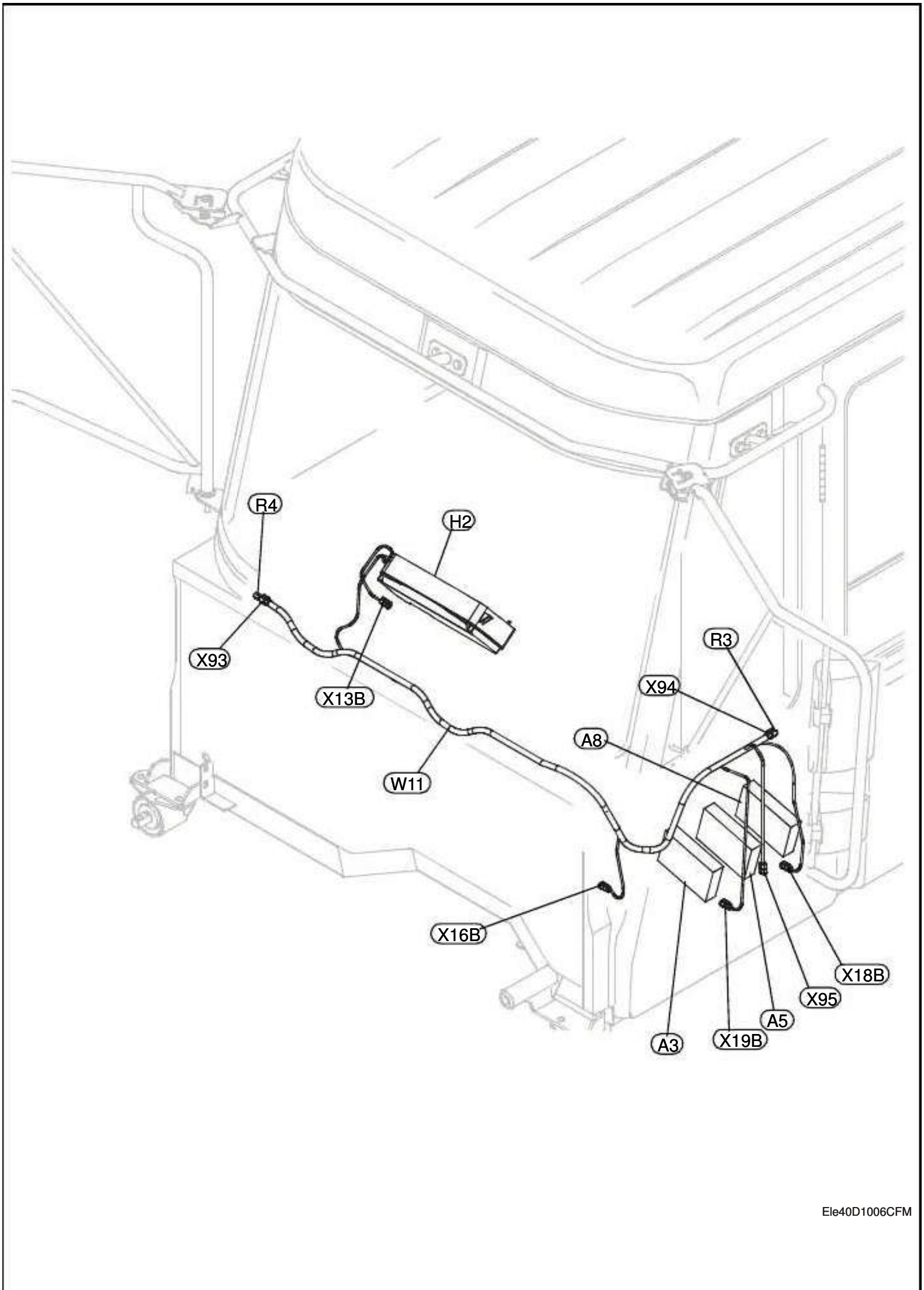

A3 Engine Control Unit (ECU).
A5 Transmission Control Unit (TCU).
A8 Chassis Control Unit (CCU).
H2 Menu Display Unit (MDU).
R3 120 Ohm CAN Termination.
R4 120 Ohm CAN Termination.
W12 CAN Harness.
X13BMDU (H2) CAN.
X16BCAN Harness-to-Service ADVISOR ™ Connector.
X18BCCU (A8) CAN Connector.
X19BECU (A3) CAN Connector.
X93 120 Ohm CAN Termination Connector.
X94 120 Ohm CAN Termination Connector.
X95 TCU (A5) CAN Connector.

Transmission Control Harness

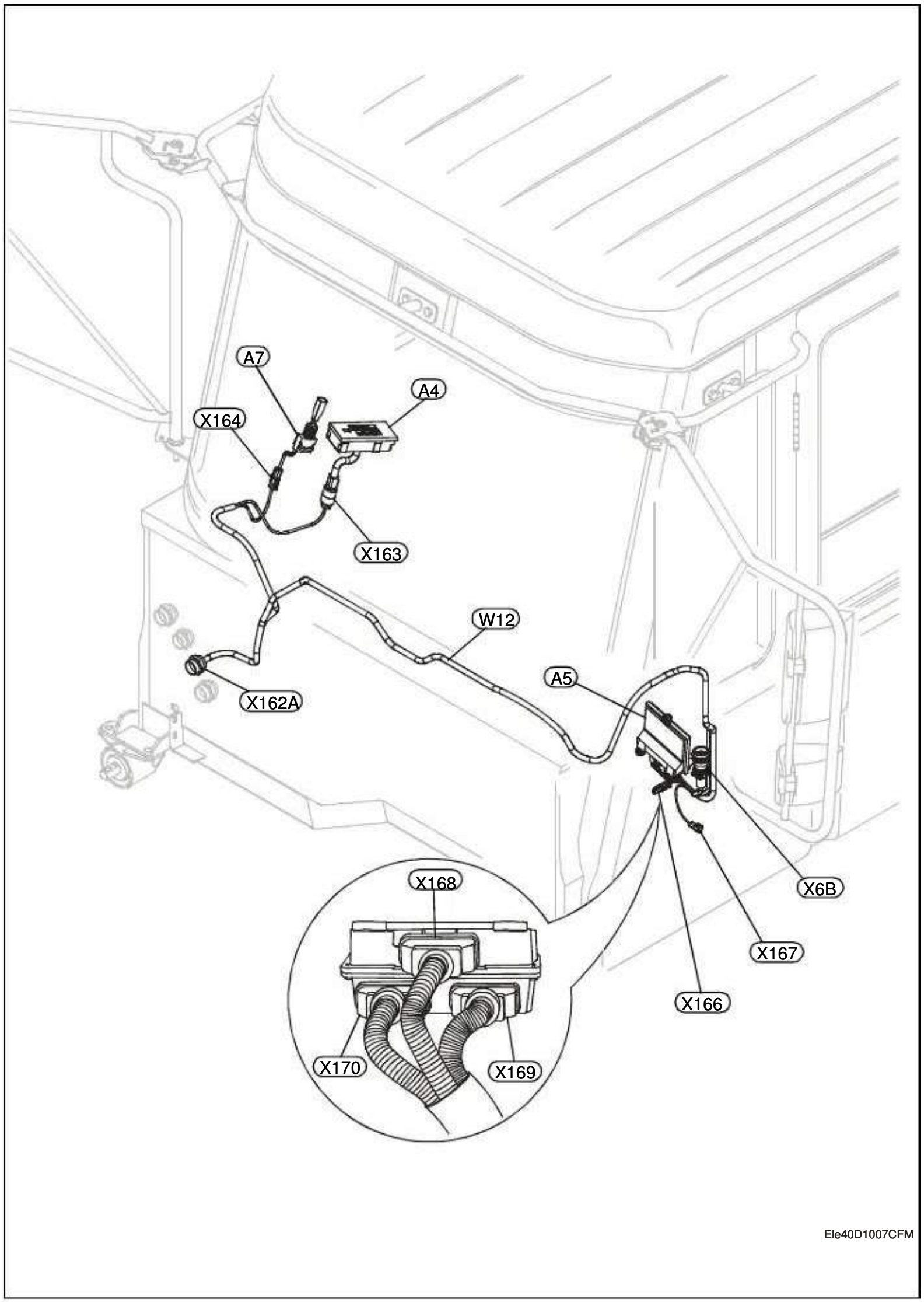

A4 Transmission Shift Control.
A5 Transmission Control Unit (TCU).
A7 Retarder Control.
W13 Transmission Control Harness.
X6B Transmission Control Harness-to-Cab Main Connector.
X162A Transmission Control Harness-to-Transmission Harness Connector.
X163 Transmission Shift Control (A4) Connector.
X164—Retarder Control (A7) Connector.
X166 Retarder Resistor (R8) Connector.
X167 TCU (A5) CAN Connector.
X168 Blue TCU (A5) Connector.
X169 Black TCU (A5) Connector.
X170 Gray TCU (A5) Connector.

Transmission Harness

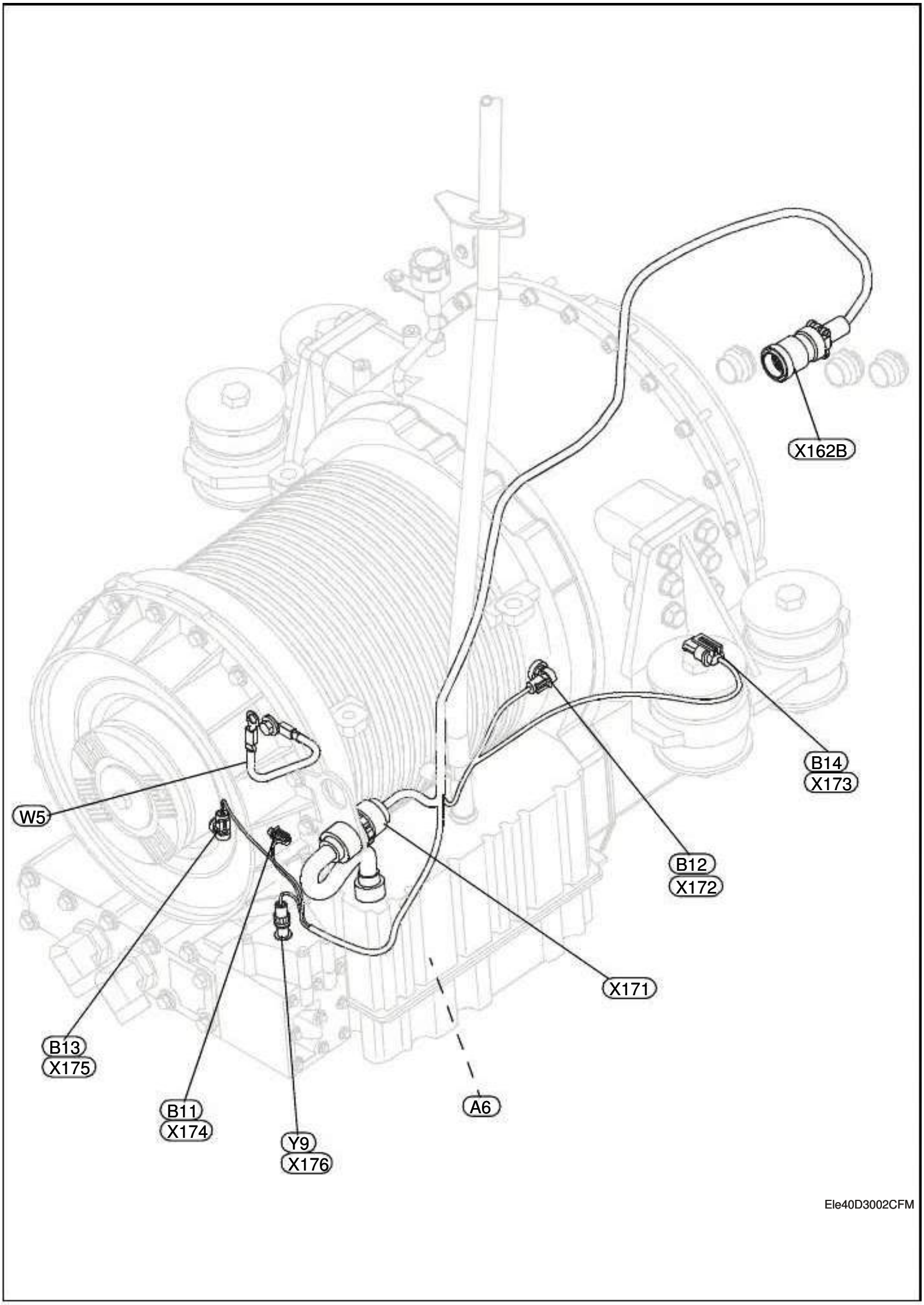

A6 Transmission Control Module.
B11 Retarder Temperature Sensor.
B12 Turbine Speed Sensor.
B13 Output Speed Sensor.
B14 Input Speed Sensor.
W5 Transmission-to-Frame Ground Strap.
X162 Transmission Control Harness-to-Transmission Harness Connector.
X171 Transmission Control Module (A6) Connector.
X172 Turbine Speed Sensor (B12) Connector.
X173 Input Speed Sensor (B14) Connector.
X174 Retarder Temperature Sensor (B11) Connector.
X175 Output Speed Sensor (B13) Connector.
X176 Retarder Solenoid (Y9) Connector.
Y9 Retarder Solenoid.

Hydraulic Harness

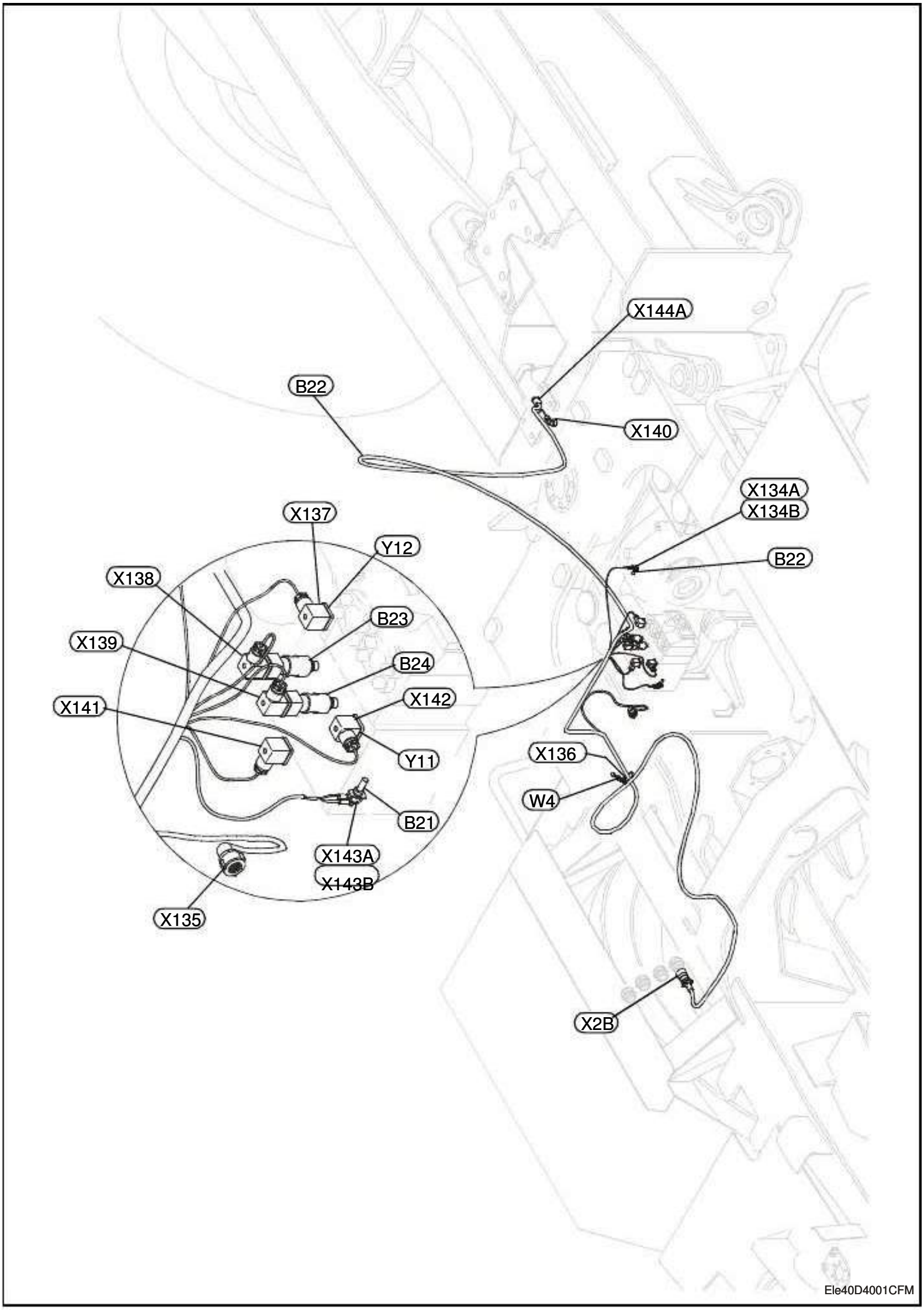

B21 Hydraulic Temperature Sensor.
B22 Wet Brake Temperature Sensor (400D Only).
B23 Service Brake Low Pressure Switch.
B24 Secondary Steering Pressure Switch.
W4 Front Frame Ground (Under Cab).
W14 Hydraulic Harness.
X2B Hydraulic Harness-to-Cab Main Harness Connector.
X134A Wet Brake Temperature Sensor (B22) (Signal) Connector.
X134B Wet Brake Temperature Sensor (B22) Connector.
X135 Not Used.
X136 Front Frame Ground Connector (Under Cab).
X137 Fan Drive Solenoid (Y12) Connector.
X138 Service Brake Low Pressure Switch (B23) Connector.
X139 Secondary Steering Pressure Switch (B24) Connector.
X140 Not Used.
X141 Hydraulic Cut-Off Solenoid (Y17) Connector.
X142 Body Float Solenoid (Y11) Connector.
X143A Hydraulic Temperature Sensor (B21) (Signal) Connector.
X143B Hydraulic Temperature Sensor (B21) Connector.
X144A Hydraulic Harness-to-Rear Frame Harness Connector.
Y11 Body Float Solenoid.
Y12 Fan Drive Solenoid.
Y17 Hydraulic Cut-Off Solenoid.

Rear Frame Harness

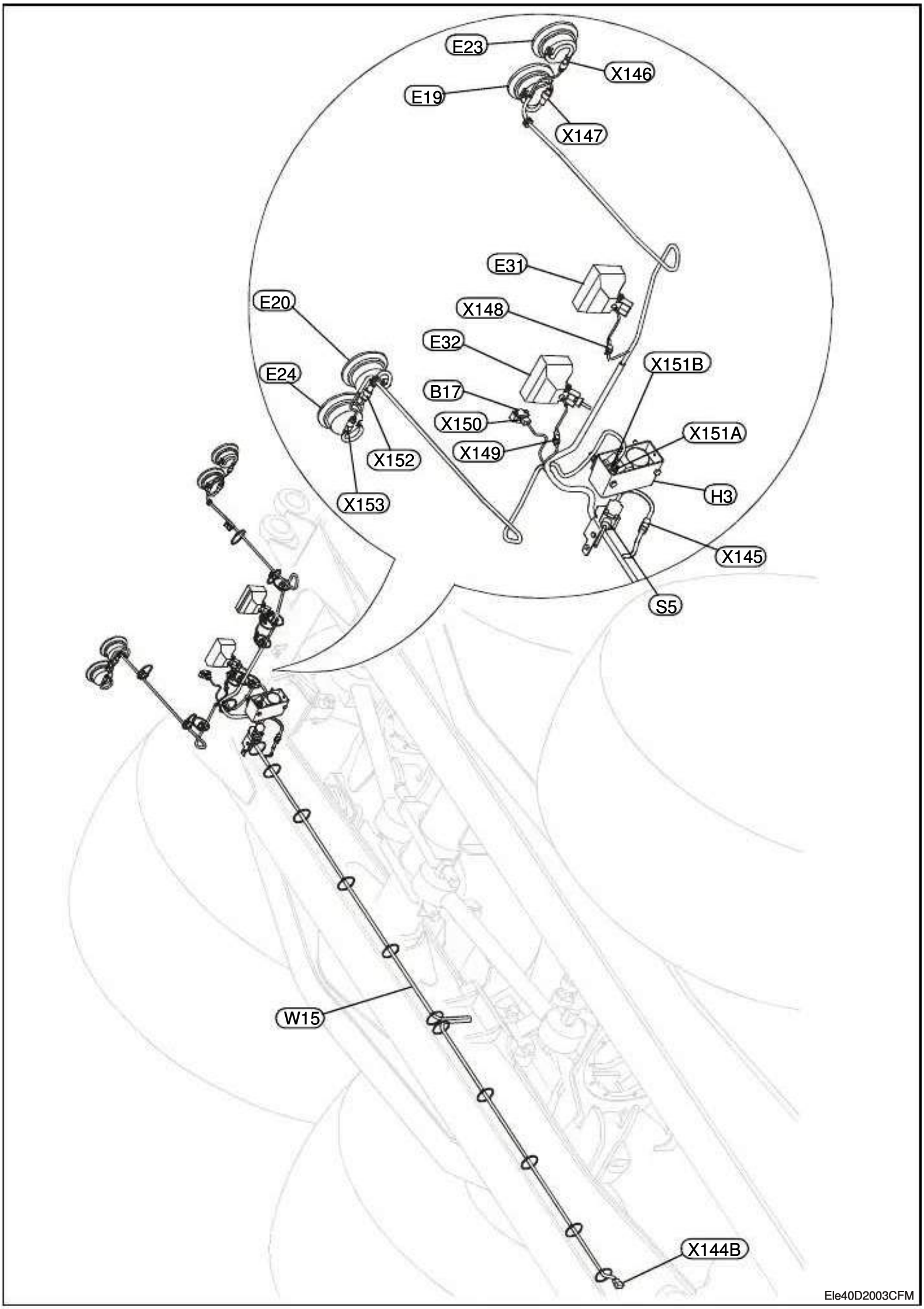

B17 Body Position Sensor.
E19 Left Stop/Park Light.
E20 Right Stop/Park Light.
E23 Left Rear Turn Signal.
E24 Right Rear Turn Signal.
E31 Left Backup Light.
E32 Right Backup Light.
H3 Backup Alarm.
S5 Body Up Switch.
W15 Rear Frame Harness.
X145 Body Up Switch (S5) Connector.
X146 Left Rear Turn Signal (E23) Connector.
X147 Left Stop/Park Light (E19) Connector.
X148 Left Backup Light (E31) Connector.
X149 Right Backup Light (E32) Connector.
X150 Body Position Sensor (B17) Connector.
X151A Backup Alarm (H3) Connector.
X151B Backup Alarm (H3) (Ground) Connector.
X152 Right Stop/Park Light (E20) Connector.
X153 Right Rear Turn Signal (E24) Connector.

Work Light Harness

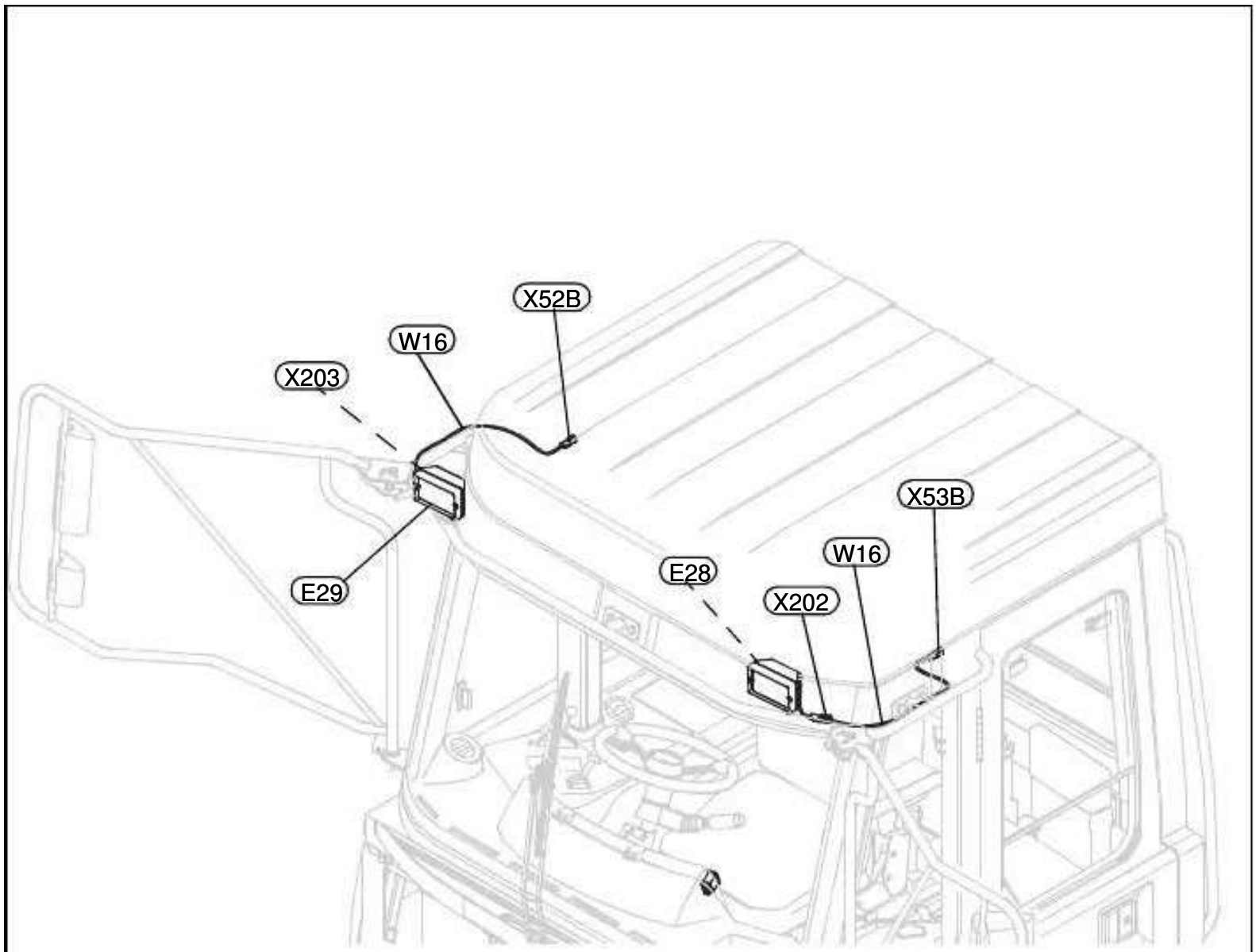

Ele40D1008CFM

E28 Left Work Light.
E29 Right Work Light.
W16 Work Light Harness.
X52B Right Work Light Harness-to-Cab Harness Connector.
X53B Left Work Light Harness-to-Cab Harness Connector.
X202 Left Work Light (E28) Connector.
X203 Right Work Light (E29) Connector.

Air Conditioning Actuator Harness

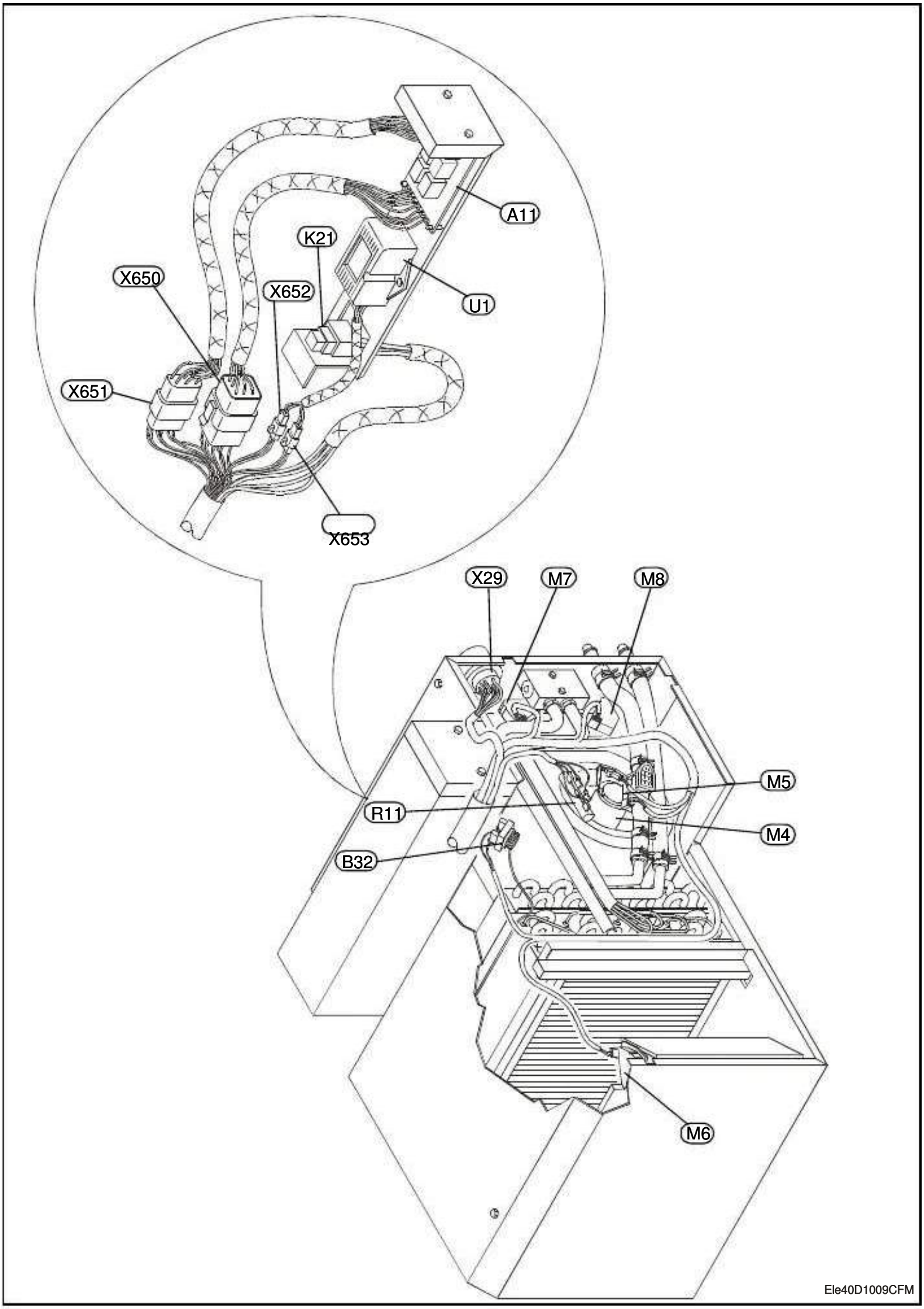

A11 A/C Relay Panel.
B32 Air Conditioning Freeze Control Switch.
K21 High Fan (Blower) Speed Relay.
M4 Blower Motor.
M5 Heater Control Valve Actuator.
M6 Recirculation Vent Actuator.
M7 Middle and Defroster Vent Actuator.
M8 Floor Vent Actuator.
R11 Blower Motor Resistor/Thermofuse.
X29 Cab Main Harness-to-A/C Actuator Harness 21-Pin Connector.
X650 A/C Relay Panel (A11) 12-Pin Connector.
X651 A/C Relay Panel (A11) 6-Pin Connector.
X652 DC/DC Converter Input Connector.
X653 DC/DC Converter Output Connector.
U1 DC/DC Converter.

EXPLANATION OF WIRE MARKINGS

Wire Colour

The wire colour (Two character code) is simply an abbreviation of the wire colour.

WIRE COLOUR	SCHEMATIC ABBREVIATION
Black	BK
Blue	BL
Brown	BN
Green	GN
Gray	GY
Orange	OG
Pink	PK
Purple	PL
Red	RD
White	WH
Yellow	YL

Multiple Wire Colours

Wires with more than one colour abbreviation will have a stripe running parallel to the wire.

The first colour abbreviation will be the main colour, the second abbreviation will be the colour of the stripe.

Example: WH/BK represents a white wire with a black stripe.

Wires with three colour abbreviations will have two stripes running parallel to the wire. The second and third colour abbreviations will be the colour of the stripes.

Example: BK/WH/GN represents a black wire with a white and green stripe.

Circuit Breakers

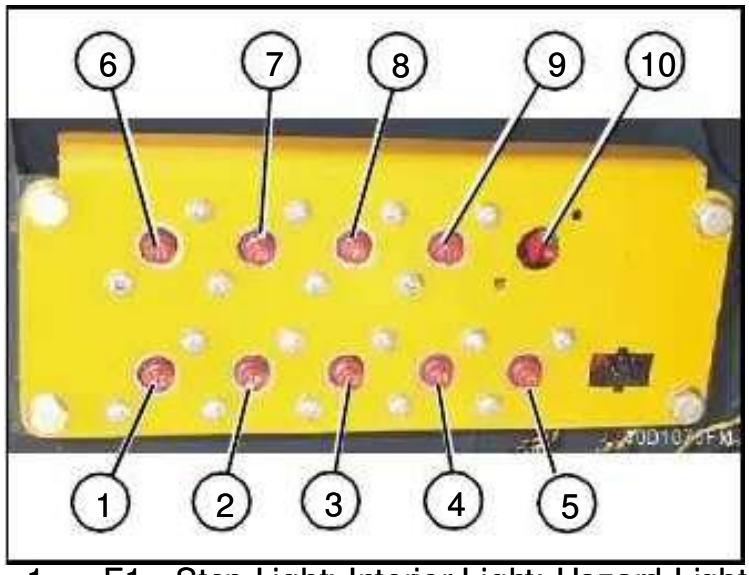

1. F1 - Stop Light; Interior Light; Hazard Light and Turn Signal Circuit Breaker (15 Amp).
2. F2 - Unswitched Power to Fuses F12; F13; F18; F19; F20 and F21 Circuit Breaker (30 Amp).
3. F3 - Switched Power to Fuses F11; F14; F15 and F16 Circuit Breaker (20Amp).
4. F4 - Headlight; Work Light; Backup Light and Rotating Beacon Circuit Breaker (5 Amp).
5. F5 - Headlight and A/C Circuit Breaker (25 Amp).
6. F6 - Park Brake; Differential Lock; Fan Drive; Body Down Detent and Range Hold Circuit Breaker (15 Amp).
7. F7 - Wiper; Washer; Horn and Mirror Circuit Breaker (25 Amp).
8. F8 - Cold Start Circuit Breaker (25 Amp).
9. F9 - Start; Neutral; MDU/CCU Power; Exhaust Brake and Body Float Circuit Breaker (15 Amp).
10. F10 - Blank.

Diodes/Resistors and Fuses

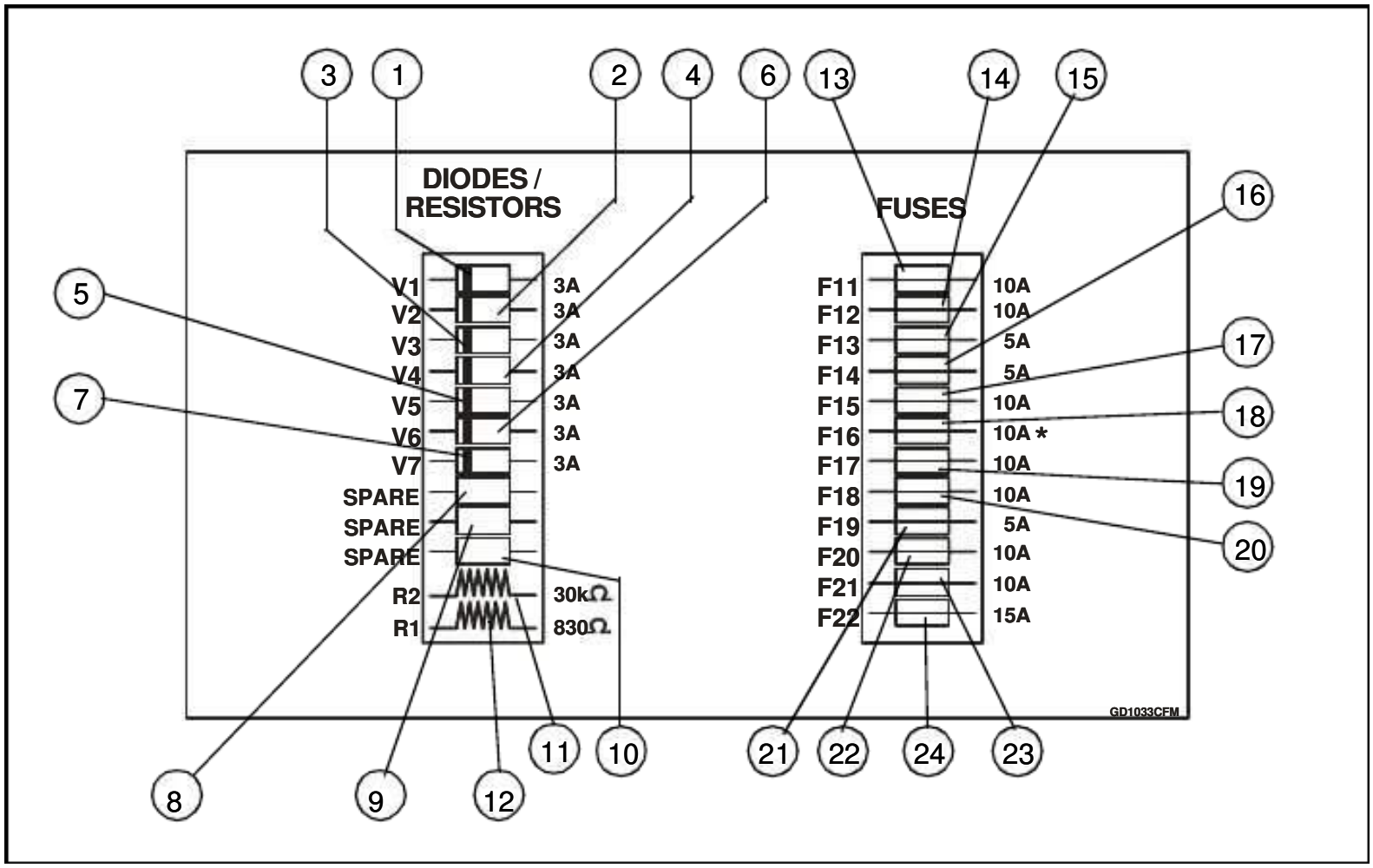

1. V1 - Retarder; Exhaust Brake Light Control Diode (3 Amp).
2. V2 - Stop Light Control Diode (3 Amp).
3. V3 - Alternator Excitation Diode (3 Amp).
4. V4 - Intermittent Wiper Control Diode (3 Amp).
5. V5 - Washer/Wiper Control Diode (3 Amp).
6. V6 - Hazard Control Diode (3 Amp).
7. V7 - MDU/CCU Power Diode (3 Amp).
8. Spare.
9. Spare.
10. Spare.
11. R2 - Not Used (30 K Ohm).
12. R1 - Air Pressure Sensor Pull-Up Resistor (830 Ohm).
13. F11 - Retarder/Voltage Regulator Fuse (10 Amp).
14. F12 - Transmission Control Unit (TCU) Fuse (10 Amp).
15. F13 - MDU/CCU power and Hazard Fuse (5 Amp).
16. F14 - Alternator Excitation Fuse (5 Amp).
17. F15 - Program/Diagnostic Fuse (10 Amp).
18. F16 - ECU/EUI Power Relay Fuse (10 Amp).
19. F17 - AM/FM Radio Fuse (10 Amp).
20. F18 - ECU Fuse (10 Amp).
21. F19 - MDU Fuse (5 Amp).
22. F20 - Diagnostic Fuse (10 Amp).
23. F21 - Battery Balancer/Accessories Fuse (10 Amp).
24. F22 - 2-Way Radio Fuse (15 Amp).

Relays/Voltage Regulator

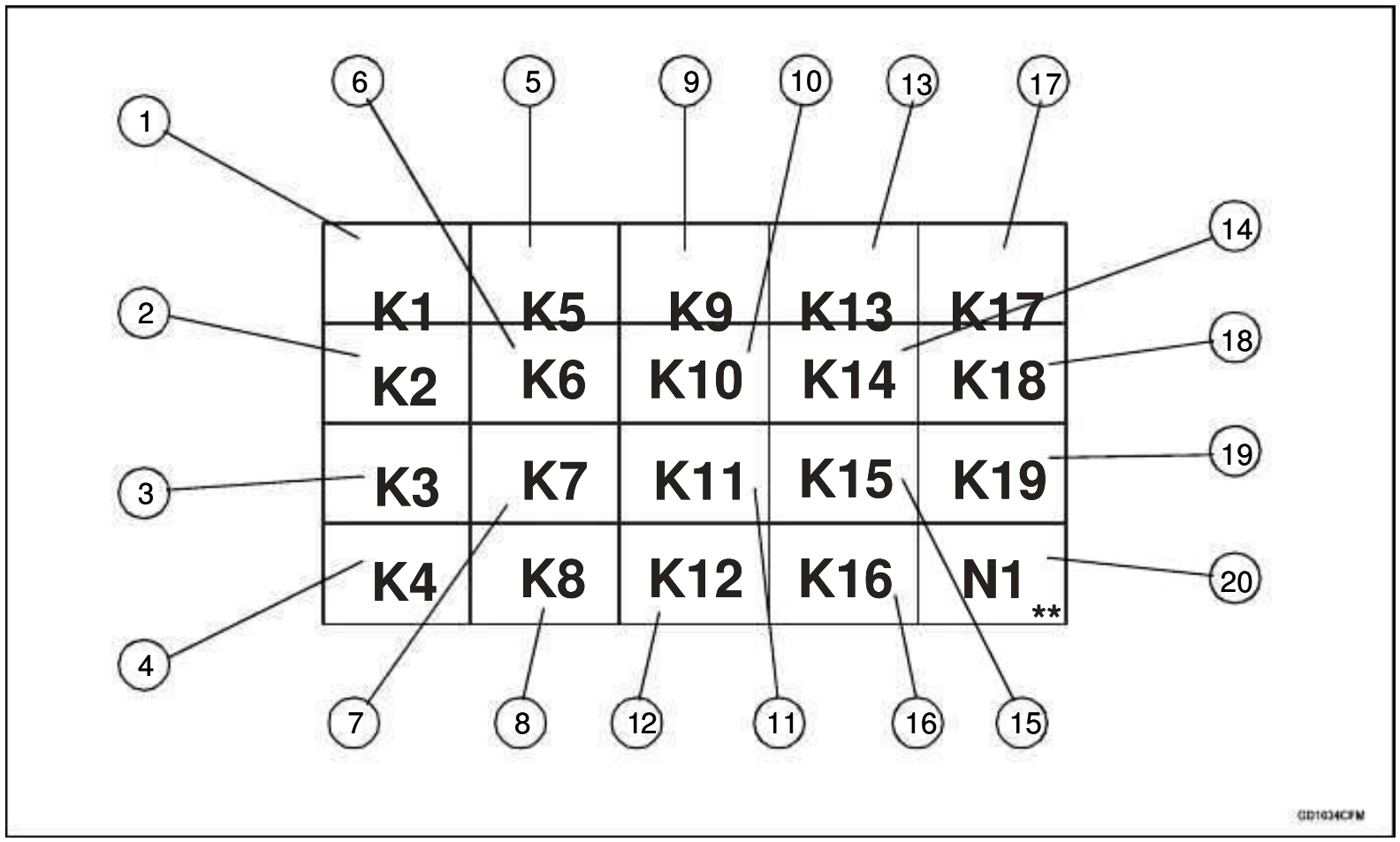

1. K1 - Neutral Start Relay.
2. K2 - Start Relay.
3. K3 - Headlights and A/C Cutout Relay.
4. K4 - Backup Relay.
5. K5 - Stop Light Relay.
6. K6 - Exhaust Brake Relay.
7. K7 - Park Brake Relay.
8. K8 - Range Hold Relay.
9. K9 - Left Turn Relay.
10. K10 - Right Turn Relay.
11. K11 - Low Beam Relay.
12. K12 - High Beam Relay.
13. K13 - Body Float Relay.
14. K14 - Intermittent Wiper Relay.
15. K15 - Accessory Relay.
16. K16 - ECU/EUI Power Relay.
17. K17 - MDU/CCI Power Relay.
18. K18 - Blank Relay Socket.
19. K19 - Blank Relay Socket.
20. N1 - Retarder Voltage Regulator.

LEFT BLANK INTENTIONALLY

CHAPTER 3. ELECTRICAL SYSTEM

SECTION 2. SYSTEMS AND SUB-SYSTEM DIAGRAMS AND DIAGNOSTICS

STARTING AND CHARGING CIRCUIT AND THEORY OF OPERATION

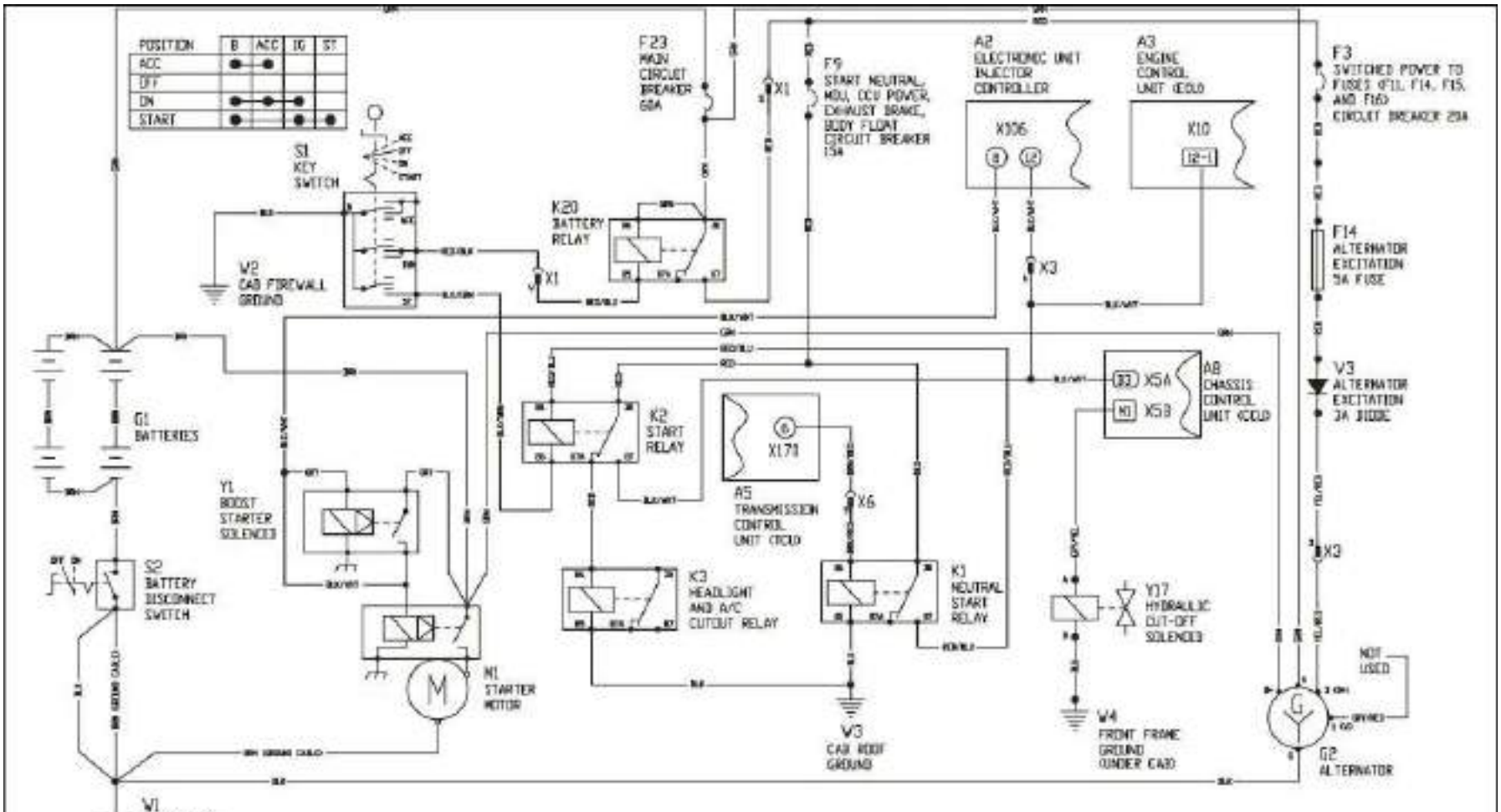

The tachometer on the Menu Display Unit is accurate enough for test work. **(See Operators Manual CHAPTER 2 for more information and CHAPTER 8 for detail operating the Menu Display Unit).**

Starting Circuit

When key switch (S1) is turned to the **"ON"** position, power becomes available at terminal 30 of neutral start relay (K1). At the same time, current flows across the normally closed contact of start relay (K3), energizing the relay. With relay (K3) energized, current is allowed to flow to the headlight and air conditioning circuits, allowing these circuits to function as needed.

With the key switch in the **"ON"** or **"START"** position, the transmission control unit (TCU) (A5) will confirm if transmission is in neutral. When it is confirmed that the transmission is in neutral, the TCU will allow current to flow out terminal 6 of TCU connector X170 to the coil of neutral start relay (K1), energizing the relay. With relay (K1) energized, power is now available at the coil of start relay (K2). The TCU also sends a signal to the transmission shift control (not shown in circuit schematic), to an **"N"** on the range indicator.

Turning key switch (S1) to the "START" position provides a ground to the coil of start relay (K2), energizing the relay. With relay (K2) energized, current flows to the electronic unit injector (EUI) controller (A2), engine control unit (ECU) (A8), signalling the **"START"** process.

When the ECU receives current at terminal B2 of connector X5A, the ECU sends current out terminal M1 of ECU connector X5B to hydraulic cut-off solenoid (Y17), energizing the solenoid. With hydraulic cut-off solenoid (Y17) energized, the hydraulic pump is destroked, which allows the engine to crank easier.

The start signal at terminal B3 of connector X5A also causes the ECU to apply the park brake.

NOTE:1. For information on operation of the hydraulic pump and load sensing circuit, (See "Main Hydraulic Pump Operation" on page 336).
2. For more information on the park brake, See "PARK BRAKE AND EXHAUST BRAKE CIRCUIT THEORY OF OPERATION" on page 76.

When the ECU receives current at terminal 12-1 of connector X10, it will confirm the start signal then send a signal through the CAN data line to the EUI controller. When the EUI controller receives current at terminal 12 of connector X105, it checks to see if any engine service codes exist.

NOTE:1. For more information on the ECU, See "ENGINE CONTROL UNIT CIRCUIT THEORY OF OPERATION" on page 64.
2. For more information on the EUI controller, See "ELECTRONIC UNIT INJECTOR CONTROLLER CIRCUIT THEORY OF OPERATION" on page 62.

If no engine service codes exists, the EUI controller will send current out terminal 8 of EUI controller connector X106. This current flows to the starter solenoid of starter motor (M1), and at the same time flows to the coil of boost starter solenoid (Y1), energizing the boost starter solenoid. The current from the output of the EUI controller is not sufficient to energize the starter solenoid by itself, but is sufficient to energize solenoid (Y1).

When solenoid (Y1) is energized, current from the battery flows directly to the starter solenoid, energizing the starter solenoid. With the starter solenoid energized, high current from the batteries is allowed to flow through he starter motor windings, causing the starter motor to crank the engine.

During engine cranking, current flow to headlight and A/C cutout relay (K3) is interrupted, thus de-energizing the relay. With relay (K3) de-energized, current to the headlight and air-conditioning circuits is interrupted, deactivating these systems (if activated). Deactivating the headlights and air-conditioning reduces the cranking load on the engine during start-up.

To assist engine starts in cold weather, a cold start system is provided. For information on the cold start system **See "COLD START CIRCUIT THEORY OF OPERATION" on page 60.**

Charging Circuit

Alternator (G2) provides power to all machine circuits and charges the batteries when the engine is running. Terminal B+ of the alternator is connected to battery positive (+) at all times.

When key switch (S1) is in the "ON" position, current from circuit breaker (F3) is sent to terminal D+ on the alternator to excite the alternator field windings. Alternator excitation diode (V3) prevents current feedback from the alternator if the alternator circuitry is improperly connected or has a major failure.

The battery charge light on the MDU will come ON if any of the following occur:

- Key Switch (S1) is in the "ON" position with engine speed less than 400 r.p.m.
- Alternator (G2) has malfunctioned.
- Alternator output less than 25.5 volts or more than 29.5 volts.
- Difference between single battery voltage and 12 system voltage is more than 1.5 volts. **See "Battery Balancer And 12-Volt Accessory Circuit Theory of Operation" on page 90**

During normal machine operation, system voltage is shown on the monitor display.

The battery charge status is digitally displayed in the menu structure of the MDU, when accessed. For more information on the menu structure, **See CHAPTER 8 in Operator's Manual.**

COLD START CIRCUIT THEORY OF OPERATION

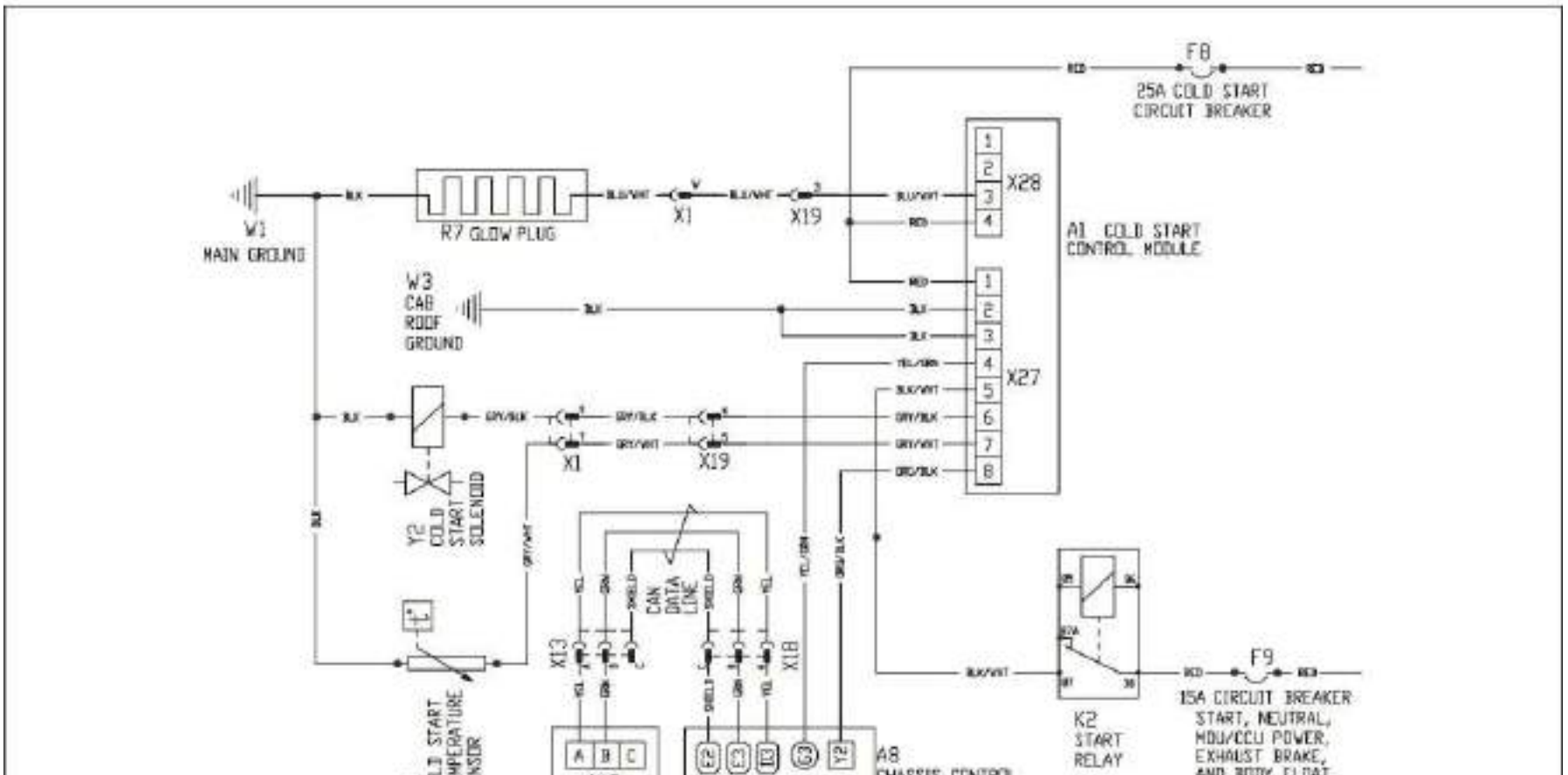

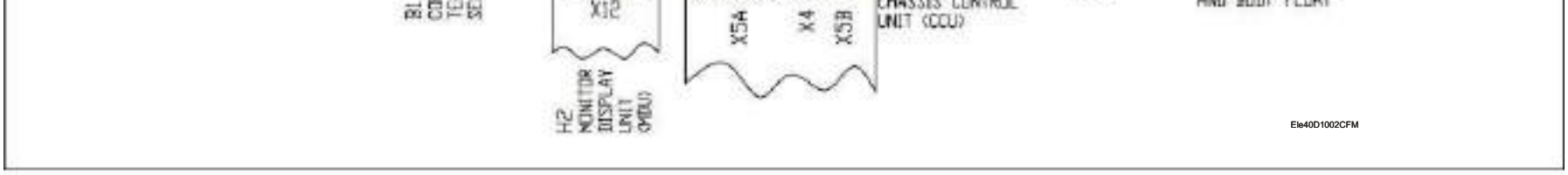

Figure 3-2

When the key switch is turned to the "**ON**" position, power from cold start circuit breaker (F8) is provided at terminal 1 of connector X27 and terminal 4 of connector X28 on cold start module (A1). The cold start control module (A1) will send a signal out terminal 8 of connector X27 to terminal Y2 of connector X5B on chassis control unit (CCU) (A8).

The CCU will then send the signal through the CAN data line to monitor display unit (MDU) (H2), which will cause the COLD START light to come **ON**.

If the ambient air temperature is below 15°C (59°F) the cold start system will remain **ON** for approximately 20 seconds.

If the ambient air temperature is above 15° C (59°F), the cold start light will go **OFF** after 2 seconds.

NOTE: The cold start status is displayed in the menu structure of the MDU, when accessed. For more information, See CHAPTER 8 in the OMM.

During a cold start, glow plug (R7) will become hot and the cold start light will lit for approximately 20 seconds then go **OFF,** signalling the engine is ready to be cranked.

During cranking, current from start relay (K2) flows to terminal 5 of connector X27 to let cold start control module (A1) know that the engine is being cranked. During this time, cold start control module (A1) sends current to cold start solenoid (Y2) to allow a small amount of fuel to be sprayed over the hot glow plug, this producing a flame in the combustion chamber located in the intake manifold.

The flame pre-heats the air evenly for all cylinders, which helps reduce fuel consumption during warm-up. This process of glow plug heating and fuel spray will continue until the engine reaches a temperature of 23° C (73° F), then the cold start system will deactivate automatically.

The cold start system will also deactivate if the engine cranking begins before the **COLD START** light goes **OFF**, or if the engine is not stared within 30 seconds after the cold start light goes **OFF**. To let the cold start module know the engine is running, the CCU sends a signal out G3 of connector X4 to terminal 4 of cold start module connector X27.

ELECTRONIC UNIT INJECTOR CONTROLLER CIRCUIT THEORY OF OPERATION

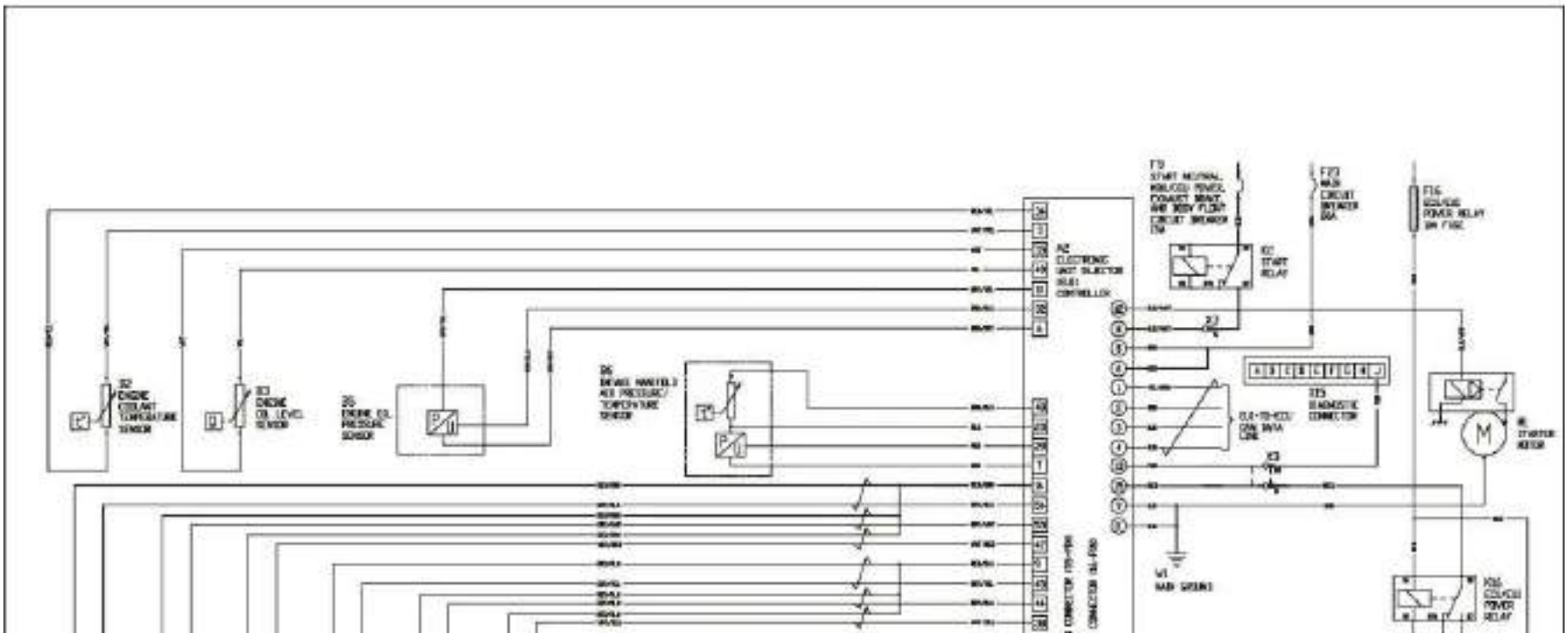

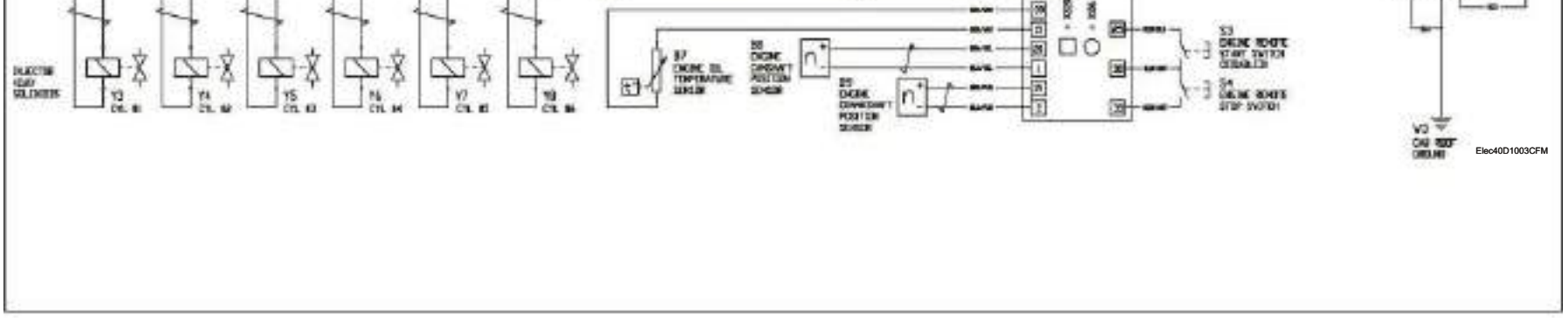

Figure 3-3

The electronic unit injector (EUI) controller (A2) receives unswitched battery power at terminals 5 and 6 of connector X106.

Switched power from the ECU/EUI power relay fuse (F16) is provided at terminal 15 of connector X106.

The EUI controller constantly analyses all relevant engine data (start of injection, load on engine, ambient conditions, etc.) from the engine sensors and data from the engine control unit (ECU), (e.g., accelerator pedal position). For information on the ECU, **See "ENGINE CONTROL UNIT CIRCUIT THEORY OF OPERATION" on page 64.**

The data is stored in the EUI controller and compared with the controller's pre-programmed software. The controller then computes the quantity of fuel needed (delivery angle) and the optimal injection time (start of delivery), then actuates each injector solenoid of the individual cylinders accordingly. For more information on how the Electronic Unit Injectors Function, **See "Electronic Unit Injector Fuel System" on page 42**

The EUI controller limits the torque request if the governed speed or a specific engine limit is reached.

The EUI controller has to detect the following variables in order to calculate proper start of delivery:

- Engine Speed.
- Specified Torque.
- Engine coolant temperature.
- Intake manifold air temperature (MAT).
- Intake manifold air pressure (MAP).
- Atmospheric pressure.
- Top dead centre (TDC) of cylinder #1.
- Start signal to starter solenoid.

Engine Speed and TDC

Engine crankshaft position sensor (B9) is the primary sensor for detecting engine speed. It is also used as a backup for detecting top dead centre (TDC) of cylinder #1 should engine camshaft position sensor (B8) malfunction.

To detect engine speed, 36 holes have been machined into the outer edge of the flywheel at 10 degree intervals. A 37th hole, located 65 degrees before top dead centre, is used for the detection of TDC.

Engine camshaft position sensor (B8) is the primary sensor for TDC of cylinder #1. It is also used as back up for detecting engine speed should the engine crankshaft position sensor (B9) malfunction.

To detect the engine speed, 12 holes has been machined into the outer edge of the camshaft gear at 30-degree intervals. A 13th hole, located 55 degrees before TDC, is for detecting the TDC.

The camshaft and crankshaft position sensors allow the EUI controller to precisely determine piston position in relation to TDC so that the EUI controller can command the correct EUI solenoid at the correct time. The EUI controller then controls the fuel delivery by energizing and de-energizing the individual solenoids that open and close the EUI spill valves.

Temperature Sensors

All engine related temperature sensors used on the B35D and B40D ADT's have a negative temperature coefficient (i.e., sensor resistance decreases as temperature increases).

The EUI controller sends a low reference voltage to the sensor, monitors the voltage drop across the sensor, then compares the voltage drop to pre-programmed values in the EUI controller memory to determine the temperature.

⚠ WARNING

Do not apply battery voltage to any of the engine temperature sensors. Damage to the sensor will occur.

Engine Coolant Temperature Sensor

The EUI controller monitors the signal from engine coolant temperature sensor (B2) for:

- Engine protection purposes.
- Starting fuel quantity determination (The EUI controller will adjust the amount of fuel delivered during start-up based on initial engine coolant temperature).
- Start of fuel delivery determination (The EUI controller will adjust the timing of fuel delivered during start-up based on initial engine coolant temperature).
- Specified torque calculation (Limits engine output).

The EUI controller also sends the engine coolant temperature information to the engine control unit (ECU).

The ECU transmits the information through the CAN data line to the MDU, where the information is displayed on the COOLANT TEMP. gauge.

NOTE:1. For more information on the COOLANT TEMP. gauge and the MDU, See "MENU DISPLAY UNIT CIRCUIT THEORY OF OPERATION" on page 78.
2. The engine coolant temperature status is digitally displayed in the menu structure of the MDU, when accessed. For more information on the Menu Display Unit Menu Function, See CHAPTER 8 in Operator's & Maintenance Manual.

Engine Oil Temperature Sensor:

The EUI controller monitors the signal from engine oil temperature sensor (B7). The sensor varies voltage with respect to temperature change as follows:

Oil Temperature @ 130° C (266° F)0.41 volts
Oil Temperature @ 115° C (239° F)0.58 volts
Oil Temperature @ 98° C (194° F)0.87 volts
Oil Temperature @ 75° C (158° F)1.50 volts
Oil Temperature @ 55° C (50° F)3.06 volts
Oil Temperature @ -5° C (23° F)4.41 volts
Oil Temperature @ -30° C (-4° F)4.71 volts
Oil Temperature @ -40° C (-40° F)4.80 volts

Manifold Air Temperature (Mat) Sensor

The MAT sensor is an integral part of the intake manifold air pressure/temperature sensor (B6). The EUI controller monitors the intake manifold air temperature in conjunction with the manifold air pressure to determine air density, then adjust the fuel delivery accordingly.

Pressure Sensors

Manifold Air Temperature (MAP) Sensor

The MAP sensor is an integral part of the intake manifold air pressure/temperature sensor (B6).

The EUI controller monitors the intake manifold air pressure in conjunction with the manifold air temperature to determine air density, then adjust the fuel delivery accordingly.

The EUI controller compares the MAP sensor data with data from an atmospheric pressure sensor located inside the EUI controller.

The comparing of manifold pressure with atmospheric pressure is used for diagnostics purposes and to protect the engine when operating at full throttle above certain altitudes.

Engine Oil Pressure Sensor

The EUI controller monitors the signal from engine oil pressure sensor (B5) and passes the information to the engine control unit (ECU).

The ECU sends the information through the CAN data line to the Menu Display Unit where the information is displayed on the Engine Oil Pressure Gauge.

When engine oil pressure becomes less than a predetermined low pressure setting, the red Service light will flash and an audible alarm will sound.

NOTE:For more information on the Engine Oil Pressure gauge and low oil pressure alarm, See MDU Circuit Theory of Operation in this Section. The engine oil pressure status is digitally displayed in the menu structure of the MDU, when accessed. For more information on the menu structure, See CHAPTER 8 of the Operator's & Maintenance Manual.

Switches

Engine remote stop switch (S4), located at the right side of the engine, has a direct connection to the EUI controller for remote engine shut-down. Engine remote start switch (S3), located next to the stop switch, is disabled and has no function.

ENGINE CONTROL UNIT CIRCUIT THEORY OF OPERATION

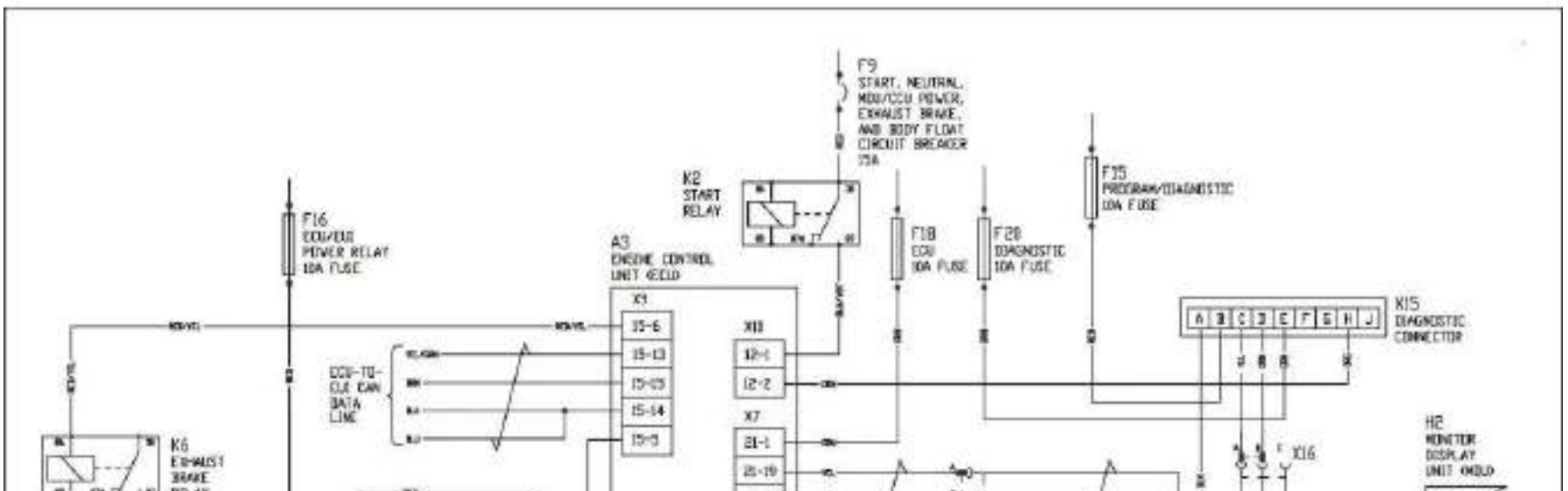

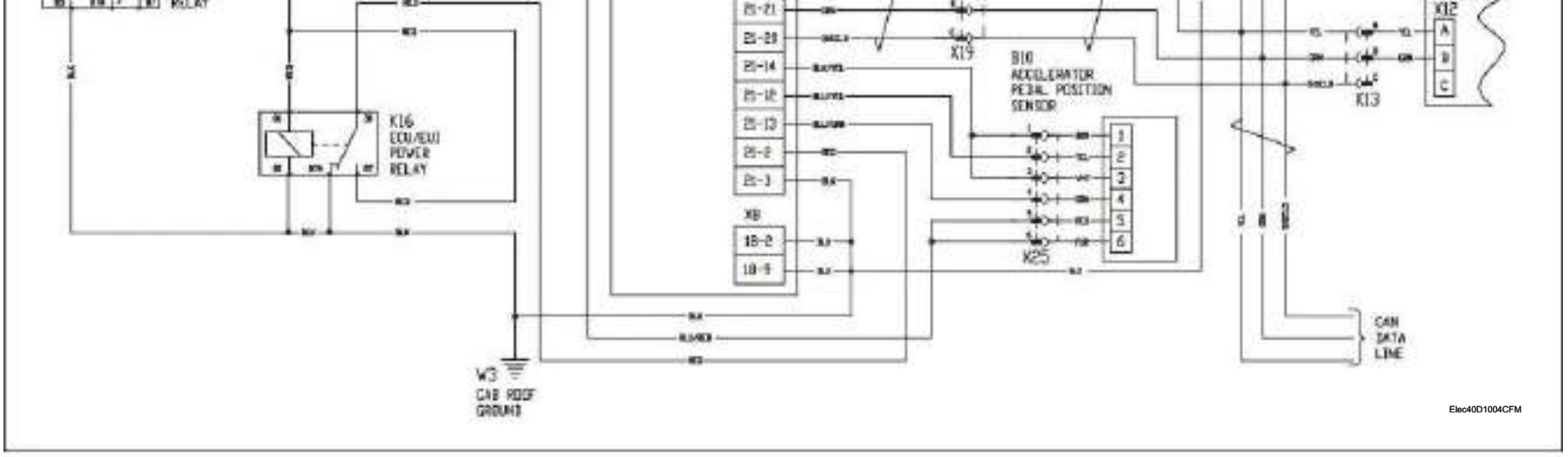

Figure 3-4

When the key switch is in the **ON** position, power for ECU (A3) comes from ECU/EUI power relay fuse (F16). The ECU stores vehicle specific data for operation of the engine and any engine related service codes.

It constantly monitors data from the EUI controller, the accelerator pedal position sensor and the start circuit. For information on the start circuit, **See** "STARTING AND CHARGING CIRCUIT AND THEORY OF OPERATION" on page 58.

The ECU transmits any engine service codes that may occur through the CAN data line to the MDU, causing the engine service light to come **ON** and the service code to be displayed.

NOTE: 1. To diagnose service codes, see Service Code Diagnostics - Engine Control Unit in "Service Code Diagnostics - Engine Control Unit" on page 99.
2. The ECU status is digitally displayed in the menu structure of the MDU, when accessed. For More information on the MDU menu functions - See CHAPTER 8 of the Operator's & Maintenance Manual.

The engine speed is controlled automatically. There is no mechanical link between the engine and the accelerator pedal. Accelerator pedal position sensor (B10) communicates accelerator position to the ECU using pulse width modulation (PWM).

The ECU receives the PWM signal and compares it to pre-programmed limit values. It then passes a torque request through the CAN data line to the EUI controller. The EUI controller processes the information along with data from the other engine inputs to control the EUI solenoid accordingly. (For information on the EUI controller, **See** "ELECTRONIC UNIT INJECTOR CONTROLLER CIRCUIT THEORY OF OPERATION" on page 62).

Engine slow idle and fast idle speeds are pre-programmed into the ECU. When at the maximum speed, the ECU requests only the torque which is necessary for maintaining the speed even if the accelerator is at the full throttle position.

Whenever the ECU or the accelerator pedal position sensor is replaced, it may be necessary to calibrate the accelerator pedal position.

An acceptable margin of error between pedal movement relative to percentage read-out on the MDU will differ from operator to operator. Because of this, the need for re-calibration will be determined by operator preference.

To program the ECU, a special diagnostic tool (The Mini Diag II Version D) is required. The Mini Diag II is capable of reading and deleting engine related service codes and calibrating accelerator pedal position.

The Mini Diag II can be acquired from *BELL EQUIPMENT* Part No. 280479. Follow the instructions that come with the diagnostic tool.

In the event of an overspeed condition or when engine speed is above 800r.p.m., the torque convertor is locked up and the accelerator pedal position is less than 10%, the ECU will send current to the coil of exhaust brake relay (K6), energizing the relay and activating the engine exhaust brake. (For more information on the engine exhaust brake, **See** "PARK BRAKE AND EXHAUST BRAKE CIRCUIT THEORY OF OPERATION" on page 75).

TRANSMISSION CONTROL UNIT AND RETARDER CIRCUIT THEORY OF OPERATION

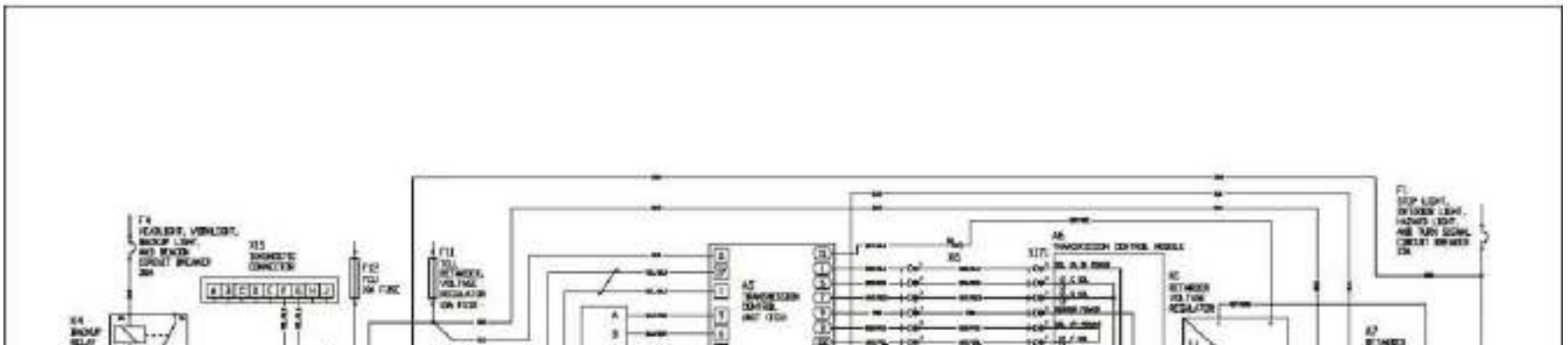

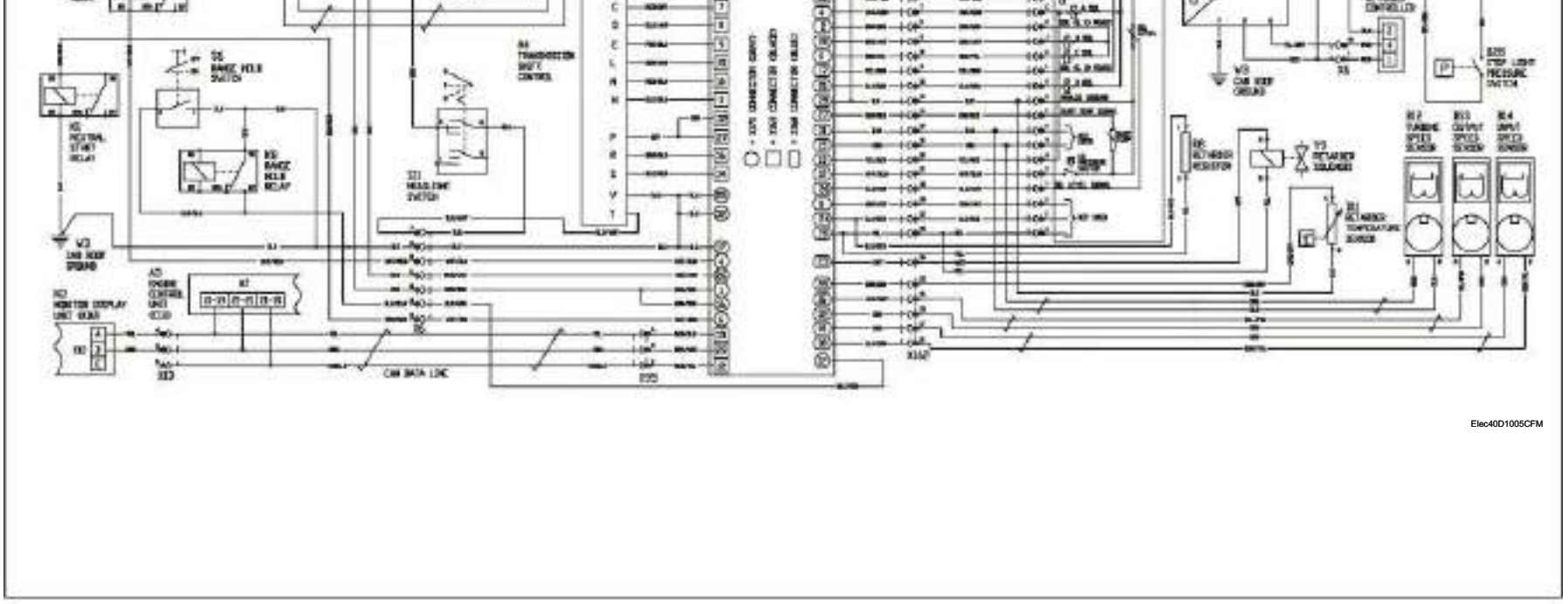

Figure 3-5

Transmission Control Unit

Transmission control unit (TCU) (A5) receives unswitched battery power at terminals 1 and 16 of connector X170.

When the key switch is in the ON position, power from TCU, retarder, voltage regulator fuse (F11) is provided to terminal 26 of TCU connector X170, terminal 11 of TCU connector X169, terminal 1 of retarder controller (A7) and terminal 5 retarder voltage regulator (N1).

The TCU receives and processes information defining:

- Shift Selector position.
- Accelerator Pedal position.
- Input (Engine) speed.
- Turbine speed.
- Transmission output speed.
- Transmission Sump temperature.
- Engine Coolant temperature.
- Retarder temperature.
- Percentage of retardation.
- C3 Pressure Switch status.
- Transmission Oil level.

NOTE: The ECU sends the accelerator pedal position and engine coolant temperature data through the CAN data line to the TCU.

The TCU uses this information to control the transmission solenoids and valves, supply system status and provide diagnostic information such as service codes.

To activate the transmission solenoids, the TCU uses pulse width modulation (PWM) which varies the duty cycle (ON Time) of each corresponding transmission solenoid for optimum shift quality.

⚠ CAUTION

When diagnosing transmission solenoids, never apply system voltage (24 volts) to activate the solenoid (Damage will occur). Use only 5 volt DC. It is recommended that 3 AA batteries connected in series be used to obtain the required 5 volts).

After a shift is completed, the TCU compares the shift to an ideal shift profile in the TCU program and makes adjustments before the next shift of the same kind is made. This is called "adaptive logic" which establishes the initial conditions for shifts.

There is "fast adaptive" logic and "slow adaptive" logic.

When in fast adaptive mode, the TCU makes large changes in the initial shift conditions to adjust for major system tolerances. Major system tolerances are solenoid - to -solenoid, main pressure and clutch - to - clutch variations.

When in slow adaptive mode, the TCU makes small changes in the initial shift conditions in response to minor system changes. Minor system changes occur slowly and are items such as wear and solenoid degradation or drift.

The TCU changes from fast adaptive to slow adaptive when the profile of an actual shift has nearly reached the ideal profile desired. When a new or newly rebuilt transmission has been installed, the adaptive logic information should be removed from the TCU memory. This is done using the Service ADVISOR ™ application or the PRO-LINK ® Diagnostic Data Reader.

NOTE: 1. The Pro-Link diagnostic tool requires a special adapter harness, Part No. 207663, to connect to the diagnostic connector (X15).
2. The transmission status is digitally displayed in the menu structure of the MDU, when accessed. For more information on the menu structure, see CHAPTER 6 of the OMM.

The TCU is an integral part of the neutral start system. During engine start, the TCU verifies if the transmission is in neutral. Once neutral is confirmed, the TCU provides an output to the coil of neutral start relay (K1), energizing the relay. For more information of the start circuit, **See "STARTING AND CHARGING CIRCUIT AND THEORY OF OPERATION" on page 58**

When the range hold circuit is enabled, range hold switch (S6) or range hold relay (K8) provide a ground at terminal 12 of TCU connector X170, thus putting the TCU in range hold mode.

When in this mode, the TCU will prevent the transmission from up-shifting to a higher gear than the gear selected at the time of activation. For more information on the range hold system, **See "BIN CONTROL, FAN DRIVE AND RANGE HOLD CIRCUIT THEORY OF OPERATION" on page 74**

Retarder Control

The retarder system is activated whenever transmission output is over 900 r.p.m. and the accelerator pedal is fully released to slow idle position or service brakes applied.

Activating the retarder will cause the stop lights to come **ON**. For more information, **See "Stop Light Circuit Theory of Operation" on page 84.**

When the service brakes are not applied, the amount of retardation is controlled by retarder controller (A7). The retarder control lever has seven positions with position 0 being the lowest percentage of retardation (12%) and position 6 being the highest percentage of retardation (100%).

Although there are seven lever positions, there are only six levels of retardation. Lever position "0" and "1" send the same amount of voltage to terminal 2 of retarder voltage regulator (N1), while each successive lever position sends a higher voltage to the retarder voltage regulator.

The retarder voltage regulator, in turn, sends a successively higher voltage to terminal 11 of TCU connector X168. Each successive voltage level received at terminal 11 causes the TCU to vary the duty cycle to retarder solenoid (Y9) accordingly.

NOTE: 1. A low voltage at terminal 11 of TCU connector X168 causes the TCU to produce a short duty cycle (modulated) output to retarder solenoid (Y9), which results in less charge oil flow to the retarder.
2. A higher voltage at terminal 11 causes the TCU to produce a longer duty cycle output to the retarder solenoid which results in more charge oil flow to the retarder.

If the TCU receives an abnormal speed signal from output speed sensor (B13) or an over-temperature signal from retarder temperature sensor (B11), the TCU will send the appropriate retarder response signal to retarder solenoid (Y9), regardless of the position of the retarder control lever.

When a retarder over-temperature situation exists, sensor (B11) sends a signal to the TCU which activates the retarder light on the MDU, shortens the duty cycle signal to solenoid (Y9) as necessary to reduce oil flow to the retarder, log service codes and down shift the transmission as

Service Codes

The TCU stores both active and historical (non-active) service codes. An active code is any code that is current in the TCU decision making process.

Historical codes are codes that are retained in the TCU's memory and will not necessarily affect the TCU decision making process. Historical codes are useful in determining if a problem is isolated, intermittent or results from a previous malfunction.

Service codes can be accessed and cleared using transmission shift control (A4), the service

The "Limp Home" mode is a hydraulic latched system designed into the transmission in the event the TCU looses power or has a major malfunction.

When in "Limp Home" mode the transmission shifts to a predetermined gear depending on what gear was operating at the time of the electrical failure. The transmission will not upshift, down shift, shift into reverse or lock up the convertor.

If the engine is stopped (key switch turned to **OFF** position), the next time the machine is started will cause the transmission to remain in neutral until

prescribed by the software program.

Applying the service brakes causes stop light pressure switch (B28) to send current to terminal 1 of retarder voltage regulator (N1).

When this happens, the retarder voltage regulator sends the maximum voltage signal representing 100% retardation to the TCU. The TCU then puts the retarder at 100% retardation regardless of the position of the retarder control lever.

Having the service brake circuit enable, the retarder allows the retarder to function even if the accelerator pedal position sensor malfunction. For more information on how the service brakes interact with the retarder, **See** Table on page 84

NOTE: The retarder status is digitally displayed in the menu structure of the MDU, when accessed. (For more information on the menu structure, See CHAPTER 8 of the OMM.)

ADVISOR ™ application, or the PRO-LINK ® Diagnostic Data Reader.

Active codes are cleared when power to the TCU is removed. Some codes are self-clearing when the condition which causes the code is no longer detected by the TCU. Other codes must be manually removed.

NOTE: 1. The Pro-Link diagnostic tool requires a special adapter harness, Part No. 207662, to connect to the diagnostic connector (X15).
2. The transmission status is digitally displayed in the menu structure of the MDU, when accessed. For more information on the menu structure, see CHAPTER 8 of the OMM.

Should an electrical failure to the TCU occur and as long as key switch is not turned to the **OFF** position, the machine may be operated for a limited amount of time in what is called the "Limp Home" mode.

the malfunction is repaired.

In the event of a loss of electrical power, the transmission defaults to the following ranges:

Attained Range	Default Range
Reverse	Neutral
Neutral	Neutral
Low	3rd
1st	3rd
2nd, 3rd, 4th	4th
5th	4th
6th	5th

For most transmission related service codes, the TCU will send a signal through the CAN data line to the MDU, causing the Transmission Service light to come **ON**.

To diagnose service codes, **See "Service Code Diagnostics Transmission Control Unit (TCU)" on page 105.**

LEFT BLANK INTENTIONALLY

CHASSIS CONTROL UNIT CIRCUIT THEORY OF OPERATION

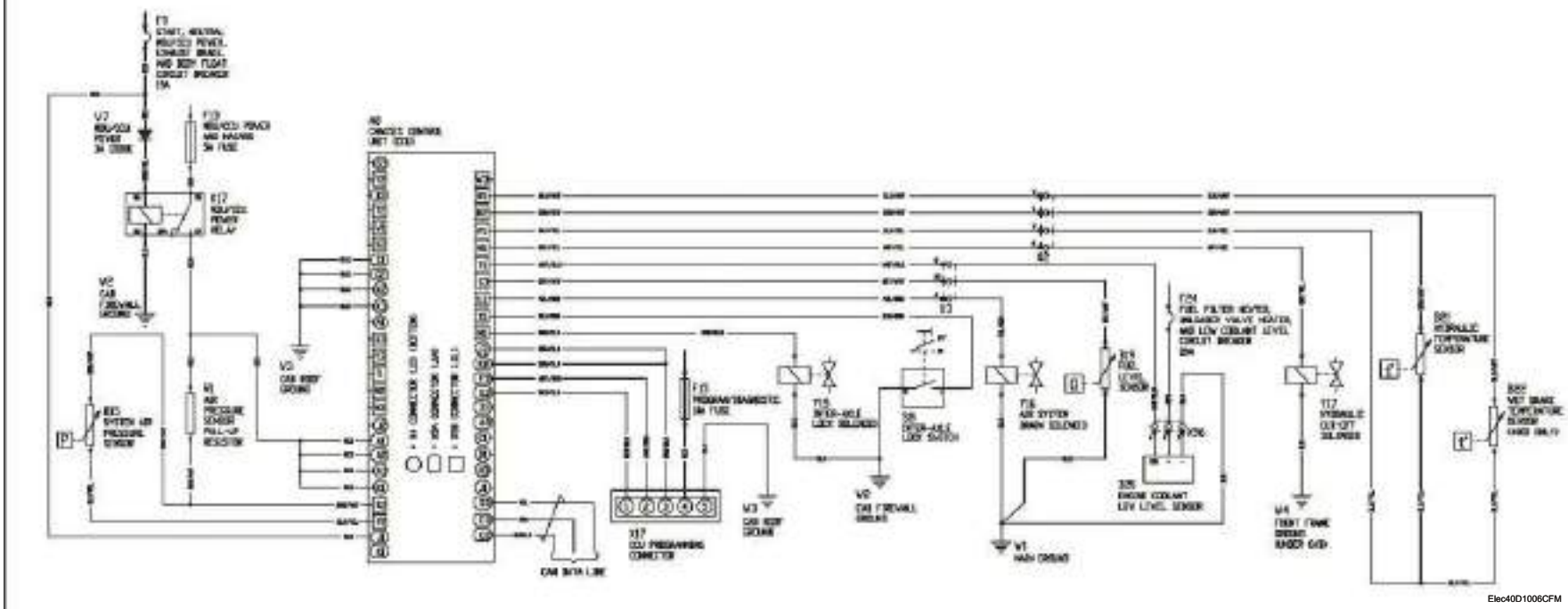

Figure 3-6

Unswitched power is available at terminal 30 of MDU/CCU power relay (K17), turning the key switch to the **ON** position, sends current from circuit breaker (F9) to the coil of MDU/CCU power relay (K17), energizing the relay. The current also flows to chassis control unit (CCU) (A6) at terminal J1 of connector X5A.

With MDU/CCU power relay (K17) energized, current from MDU/CCU power and hazard fuse (F13) is sent to the CCU at the following terminals:

- Terminals A3 and K1 of connector X4.
- Terminals A1 and A2 of connector X5A.

CCU programming connector (X17) is provided so software can be down loaded to the CCU using a RS232 interface and laptop computer. The connector receives switched power from program / diagnostic fuse (F15) at terminal 4.

The following functions are controlled or monitored by the CCU:

- Park Brake and Exhaust Brake - See "PARK BRAKE AND EXHAUST BRAKE CIRCUIT THEORY OF OPERATION" on page 76.
- Bin Control and Range Hold - See "BIN CONTROL, FAN DRIVE AND RANGE HOLD CIRCUIT THEORY OF OPERATION" on page 74.
- Turn Signal and Four-Way Flashers - See "Turn Signal And 4-Way Flasher Circuit Theory of Operation" on page 82.
- Intermittent Wipers - See "Wiper/Washer Circuit Theory of Operation" on page 88.
- Hydraulic Cut-Off - See "STARTING AND CHARGING CIRCUIT AND THEORY OF OPERATION" on page 58.
- Battery Charge and Battery Balance - See "Battery Balancer And 12-Volt Accessory Circuit Theory of Operation" on page 90.
- Inter-Axle Lock.
- System Air.
- Engine Coolant Level.
- Fuel Level.
- Hydraulic Temperature.
- Wet Disc Brake Temperature (B40D only).

Inter-Axle Lock Circuit

NOTE:1. For information on the mechanical operation of the inter-axle lock, See "Inter-Axle Lock Operation" on page 275.
2. For information on the pneumatic operation of the inter-axle lock, See "Inter-Axle Lock circuit" on page 322.

Putting the inter-axle lock switch (S) in the **ON** position connects terminal X1 of CCU connector X5B to ground. When this happens and if the engine speed is 900 r.p.m. or less, the CCU sends current out terminal N1 of connector X5B to inter-axle lock solenoid (Y15), energizing the solenoid.

With solenoid (Y15) energized, the planetary gear set (inside the transfer case) locks up, causing the front and rear drive shafts to turn in unison.

When the inter-axle lock is engaged, the inter-axle lock pressure switch (B25) (Not shown in the circuit schematic) sends a signal to the MDU, causing the Inter-Axle Lock Light to come **ON**.

Once engaged, the inter-axle lock will stay engaged as long as the inter-axle lock switch (S8) is in the ON position, even if the engine speed increases above 900 r.p.m.

NOTE:1. For more information on the inter-axle lock pressure switch (B25), Inter-Axle Lock Light and the MDU, See "MENU DISPLAY UNIT CIRCUIT THEORY OF OPERATION" on page 78.
2. The inter-axle lock status is digitally displayed in the menu structure of the MDU, when accessed. For more information on the menu structure, See CHAPTER 8 of the OMM.

Sensors

System Air Pressure Sensor

The system air pressure sensor (B15) detects system air pressure and sends an analog signal representing the amount of air pressure back to the CCU. The sensor is connected in series with air pressure sensor pull-up resistor (R1) so when the key switch is in the ON position, current flows through the 830 ohm resistor (R1) and sensor (B15), then to terminal P2 (ground reference) of CC connector X5B.

The pull-up resistor is required because the CCU does not send out a reference voltage of its own to the sensor. Instead, an external voltage (system voltage) is used as the reference voltage.

The pull-up resistor absorbs most of the system voltage so the voltage drop across the pressure sensor will be with-in the 0-5 volts required by the CCU.

The signal representing the air pressure is measured across sensor (B15), then sent to terminal R3 of CCU connector X5B. The CCU sends the information through the CAN data line to the MDU where a gauge displays the amount of air pressure to the operator.

NOTE:1. For more information on the air pressure gauge and MDU. See "MENU DISPLAY UNIT CIRCUIT THEORY OF OPERATION" on page 78.
2. The system air pressure status is digitally displayed in the menu structure of the MDU, when accessed. For more information on the MDU - menu function, See CHAPTER 8 in OMM.

The air pressure sensor varies resistance with respect to air pressure as follows:

- 0kPa (0 bar (0 psi)) = 10 Ohms
- 200 kPa (2 bar (29 psi)) = 51 Ohms
- 400 kPa (4 bar (58 psi)) = 86 Ohms
- 600 kPa (6 bar (87 psi)) = 122 Ohms
- 800 kPa (8 bar (116 psi)) = 152 Ohms
- 1000 kPa (10 bar (145 psi)) = 180 Ohms

Fuel Level Sensor

The fuel level sensor (B19) is a variable resistor that sends an analog signal to the CCU at terminal 93 of connector X5B.

The CCU sends the signal through the CAN data line to the MDU where a gauge displays the amount of fuel to the operator.

When the fuel reaches a pre-determined low level, the MDU will activate the audible alarm.

NOTE:1. For more information on the fuel gauge and MDU. See "MENU DISPLAY UNIT CIRCUIT THEORY OF OPERATION" on page 78.
2. The fuel level status is digitally displayed in the menu structure of the MDU, when accessed. For more information on the MDU - menu function, See CHAPTER 8 in OMM.

When the fuel tank is empty, the fuel level sensor measures 75 ohms of resistance. When the fuel tank is full, the sensor measures 7.5 ohms of resistance.

Engine Coolant Level Sensor

The engine coolant level low sensor (B20) consists of two components: a capacitance probe and an interface module.

The probe detects water level using the 'principle of capacitance'. When two electrically conductive materials are separated by an electrical insulator, a capacitance will exist between the two conductors. The amount of capacitance is directly proportional to the area of the two plates.

The probe consists of a brass rod (1st plate) covered with polytetrafluoroethylene (PTFE) (the insulator). When the probe is covered in water, the water acts as the 2nd plate.

Maximum capacitance is obtained when the probe is fully submersed in water. Minimum capacitance exists when the probe is completely out of the water.

When little or no coolant contacts the probe, the interface module will send a signal (2.5 volts) to terminal Y1 of CCU connector X6B.

With an input at terminal Y1, the CCU will send a signal through the CAN data line to the MDU, causing the Coolant Level light to come **ON**.

NOTE:The engine coolant low level status is digitally displayed in the menu structure of the MDU, when accessed. For more information on the MDU - menu function, See CHAPTER 8 in OMM.

Hydraulic Temperature Sensor

The hydraulic temperature sensor (B21) sends an analog signal to terminal R2 of CCU connector X5B. The CCU will send the signal through the CAN data line to the MDU where the signal is digitally displayed in the menu structure. **For information on accessing the menu structure of the MDU, See CHAPTER 8 in OMM.**

When the hydraulic temperature reaches 90° C (194° F) the red Service Indicator on the MDU will flash, audible alarm (H1) will sound intermittently and the Hydraulic Temperature Light on the MDU will flash.

When the hydraulic temperature reaches 95° C (203° F) the red Service Indicator will flash, audible alarm (H1) will sound continuously, and the Hydraulic Temperature Light will flash.

NOTE:1. The hydraulic temperature status is digitally displayed in the menu structure of the MDU, when accessed. For more information on accessing the menu on the MDU - menu function, See CHAPTER 8 in OMM.

The temperature sensor varies resistance with respect to temperature as follows:

- 40° C (104° F) = 287.4 Ohms
- 50° C (122° F) = 199.6 Ohms
- 60° C (140° F) = 134.0 Ohms
- 70° C (158° F) = 95.2 Ohms
- 80° C (176° F) = 69.1 Ohms
- 90° C (194° F) = 51.3 Ohms
- 100° C (212° F) = 38.6 Ohms
- 110° C (230° F) = 29.4 Ohms
- 120° C (248° F) = 22.7 Ohms

Wet Disc Brake Temperature Sensor (B40D Only)

The wet disc brake temperature sensor(B22) sends an analog signal to terminal R1 of CCU connector X6B.

When the brake temperature reaches a predetermined temperature, the CCU will send a signal through the CAN data line to the MDU, causing the Brake Temperature Light to come **ON**.

1. The wet disc brake temperature status is digitally displayed in the menu structure of the MDU, when accessed. For information on accessing the menu structure, See CHAPTER 8 in the OMM.
2. The specifications (Resistance/temperature) for wet disc brake temperature sensor (B22) are the same as hydraulic temperature sensor (B21).

LEFT BLANK INTENTIONALLY

BIN CONTROL, FAN DRIVE AND RANGE HOLD CIRCUIT THEORY OF OPERATION

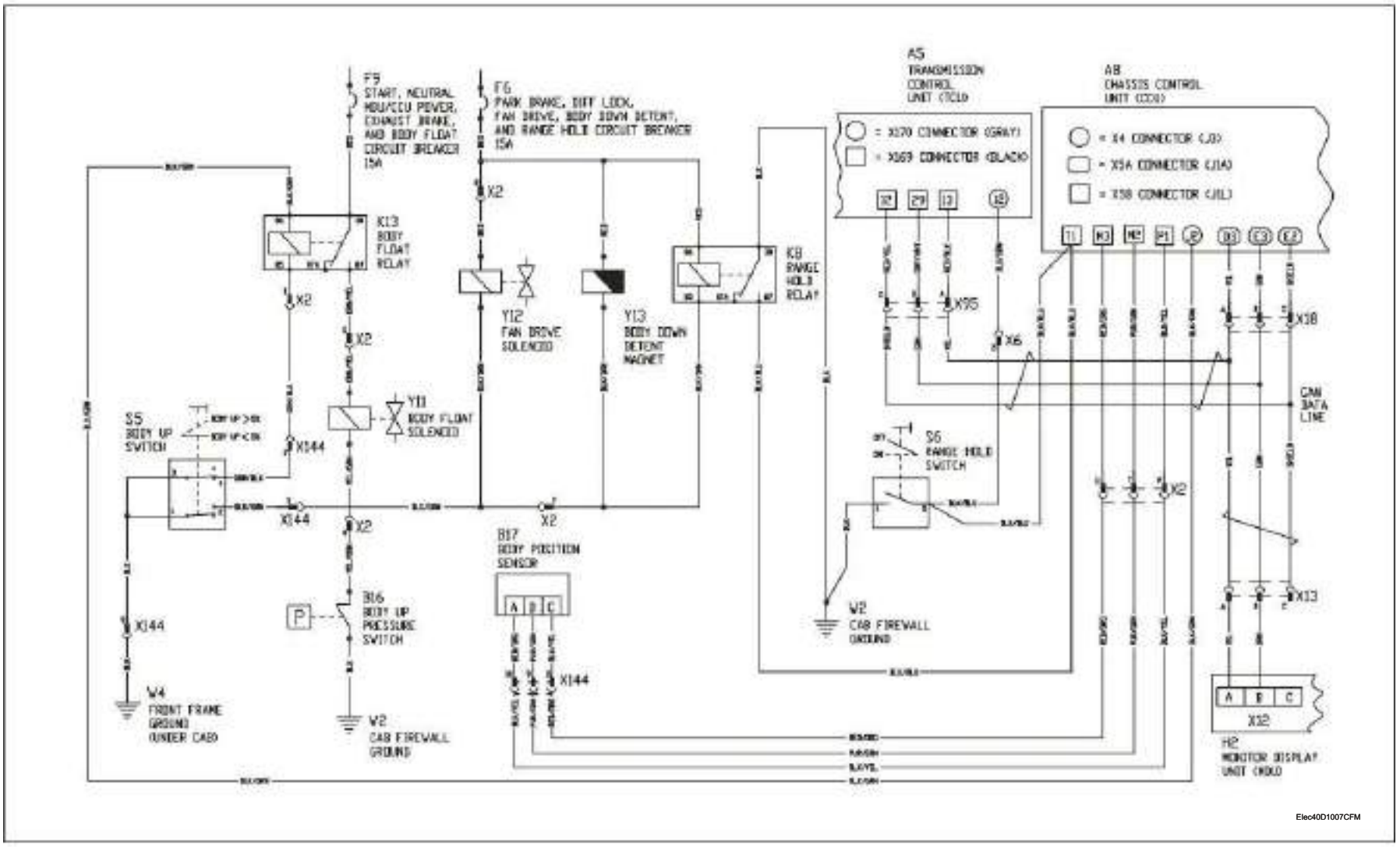

Figure 3-7

Bin and Fan Drive Control Circuit

When the key switch is in the **ON** position, power from circuit breaker (F9) is available to terminal 30 of body float relay (K13).

Power from circuit breaker (F6) is available to fan drive solenoid (Y12), body down detent magnet (Y13) and range hold relay (K8).

Bin Up Mode

Moving the bin control lever to the Bin Up position sends air pressure to the bin hydraulic control valve, which in turn, sends hydraulic oil to the body lift cylinders to raise the bin.

NOTE: For information on the hydraulic control of the bin, See "Bin Control Valve Operation" on page 366.

When air pressure in the Bin Up side of the bin pneumatic control circuit reaches 550 kPa (5.5 bar) (79.8 psi), the contacts of bin up pressure switch (B16) open. With the contacts of switch (B16) open, ground is no longer available to bin float solenoid (Y11).

When the angle of the bin increases to more than 5%, as sensed by bin position sensor (B17), the following occurs:

1. The actuator rod of bin up switch (S5) no longer makes contact with the bin causing the following to occur:

- Ground is provided to fan drive solenoid (Y12), energizing the solenoid.
- Ground is provided to bin down detent magnet (Y13), energizing the magnet.
- Ground is provided to range hold relay (K8), energizing the relay.
- Ground is removed from bin float relay (K13), de-energizing the relay.

2. The CCU removes power from terminal J2 of connector X4 to ensure bin float relay (K13) is de-energizing when body angle is more than 5%.

With fan drive solenoid (Y12) energized, the hydraulic oil flow through the fan motor is blocked, giving priority oil flow to the bin lift cylinders as the bin is being raised. For more information on the fan drive, **See "Fan Drive System Operation" on page 362.**

With range hold relay (K8) energized, the transmission is prevented from upshifting to a higher gear. For more information, **See "Range Hold Circuit" on page 75.**

With bin down detent magnet (Y13) energized, the bin tip control lever can be held in the Bin Down position by the detent magnet.

Bin Down Mode

When the bin tip control lever is moved to the Neutral or Bin Down position, air pressure exhausts from the Bin Up side of the Bin pneumatic control circuit, causing the contacts of bin up pressure switch (B16) to close.

With the bin tip control lever in the Bin Down position, the energized bin down detent magnet (Y13) will hold the bin tip control lever in the Bin Down position. The detent magnet holds the control lever in this position until the bin contacts the actuator rod of the bin up switch (S5) or if the operator moves the lever.

Float Mode

When the actuator rod of bin up switch (S5) makes contact with the bin the following occurs:

- Ground is removed from bin down detent magnet (Y13) causing the relay to de-energize. Bin tip control lever returns to Neutral position.
- Ground is removed from fan drive solenoid (Y12) causing the relay to de-energize. (Fan now operates normally).
- Ground is removed from range hold relay (K8) causing the relay to de-energize. (Transmission is allowed to upshift).
- Ground is provided to coil of bin float relay (K13).

When bin position sensor (B17) senses the angle of the bin to be 5% or less, the CCU sends power out terminal J2 of connector X4 to the coil of bin float relay (K13), energizing the relay.

With relay (K13) energized and the contacts of bin up pressure switch (B16) closed, current flows from circuit breaker (F9) to bin float solenoid (Y11), energizing the solenoid.

With solenoid (Y11) energized, oil at the head end of the bin tip cylinders will bypass the hydraulic control valve and flow directly to the oil reservoir. This allows the bin to gently lower (float) to the frame when the bin tip control lever is in the neutral position.

Range Hold Circuit

When in range hold mode, the TCU prevents the transmission from upshifting to a higher gear than the gear selected at the time of activation, thus preventing any further increase in machine speed. Normal down shifting is allowed when in range hold mode.

Putting range hold switch (S6) in the ON position or energizing range hold relay (K8) will connect terminal 12 of C connector X170 to ground, thus putting the TCU in range hold mode.

The range hold switch allows the operator to manually activate range hold mode. The range hold relay allows the bin up circuit to activate range hold mode.

Activation of the range hold circuit by the bin up circuit automatically prevents the transmission from upshifting when the bin is in the raised position.

PARK BRAKE AND EXHAUST BRAKE CIRCUIT THEORY OF OPERATION

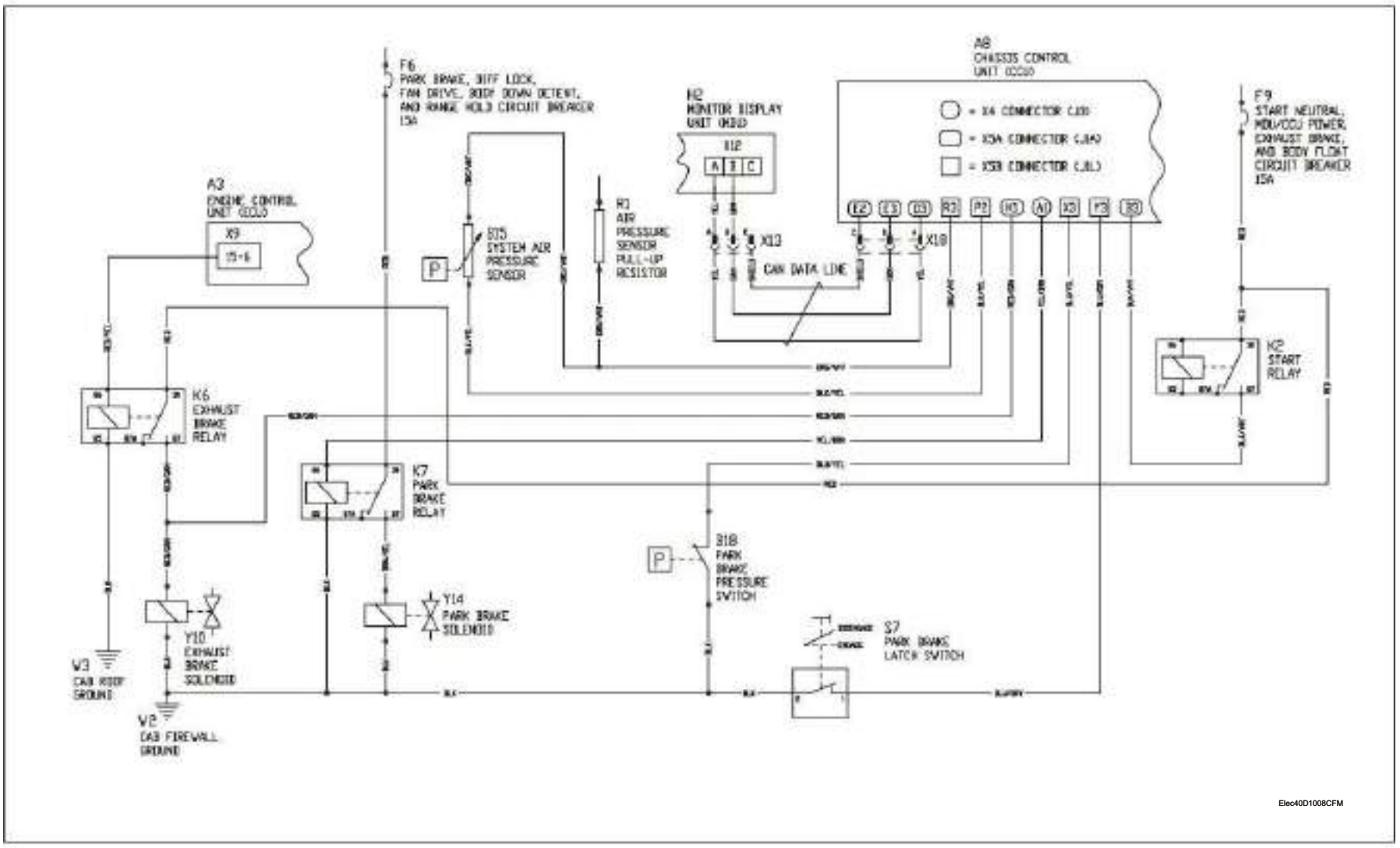

Figure 3-8

Park Brake Circuit

NOTE: The park brake is spring applied, pneumatically released.

The park brake will engage if any of the following events occur:

- Park brake lever moved to the PARK position.
- Key switch turned to the OFF position.
- Engine speed becomes less than 50 r.p.m. and ground speed less than 1 km/h (0.62 m.p.h.).
- System air pressure drops to less than 550 kPa (5.5 bar) (79.8 psi).
- Starting the engine (input exists at terminal B3 of connector X5A).

If any of these events occur, the chassis control unit (CCU) (A8) will not allow an output at terminal A1 of CCU connector X4. With no output at terminal A1, park brake relay (K7) will not energize and thus park brake solenoid (Y14) will not energize.

The de-energized solenoid blocks air pressure to the park brake actuator. It also allows the air in the actuator to vent to atmosphere, ensuring the spring inside the actuator applies the park brake.

The park brake pressure switch (B18) is located between park brake solenoid and park brake actuator. Because of this, switch (B18) senses only atmospheric pressure during the time solenoid (Y14) is de-energized.

This causes the contacts of switch (B18) to close, allowing terminal X3 of CCU connector X5B to connect to ground. When this happens and if the key switch is in the ON position, the CCU will send a signal though the CAN data line to the MDU, which in turn, causes the Park Brake Light to come **ON**.

To release the park brake, the CCU (A8) must detect the following:

- An "engine running" signal from the ECU (sent through the CAN data line).
- An analog signal at terminal R3 of CCU connector X5B indicating system air pressure is more than 550 kPa (5.5 bar) (79.8 psi).
- A signal at terminal Y3 of CCU connector X5B indicating the park brake lever is in the Park Release position. (This signal must be received only after the analog signal at terminal R3 indicates air pressure is more than 550 kPa (5.5 bar) (79.8 psi).

The analog signal at terminal R3 comes from system air pressure sensor (B15). When the analog input indicates system air pressure is more than 550 kPa (5.5 bar) (79.8 psi), the CCU starts monitoring the input at terminal Y3 connector X5B.

The park brake latch switch (S7) is mechanically connected to the park brake lever valve. Because of this, moving the park brake lever to the Park Release position causes switch (S7) to send a signal to terminal Y3.

If this signal is present before system air pressure reaches specification, the CCU will not allow an output at terminal A1 of connector X4. With no output at terminal A1, park brake relay (K7) will not energize, thus the park brake will not release.

When this happens, the park brake lever must first be returned to the Park position, then moved to the Park Release position to release the park brake.

When satisfied, the CCU will allow current to flow out terminal A1 of connector X4 to the coil of park brake relay (K7), energizing the relay. With relay (K7) energized, current flows from circuit breaker (F6) to park brake solenoid (Y14), energizing the solenoid.

With park brake lever valve in the Park Release

Exhaust Brake Circuit

During machine operation, the exhaust brake will apply whenever engine speed is above 900 r.p.m., the torque converter is locked up, and the accelerator pedal position is less than 10%. The exhaust brake will also apply if engine speed exceeds 2500 r.p.m. (engine overspeed condition) regardless of position of accelerator pedal or even if torque converter is not locked up.

When an engine overspeed condition is detected, the red Engine Overspeed Light on the MDU comes **ON**.

The ECU (A3) monitors engine speed and the accelerator pedal position. For more information on the accelerator pedal position sensor and the ECU, **See "ENGINE CONTROL UNIT CIRCUIT THEORY OF OPERATION" on page 44.**

When the accelerator pedal position is less than 10%, torque converter is locked up and engine speed is more than 900 r.p.m., the ECU energizes exhaust brake relay (K6). With relay (K6) energized, current is allowed to flow from circuit breaker (F9) to exhaust brake solenoid (Y10), thus energizing the solenoid.

With solenoid (Y10) energized, air pressure is directed to the exhaust flapper valve actuator and each of the exhaust valve brakes (EVB) located inside the cylinder heads. For more information of operation of the flapper valve and the EVB, **See "ENGINE" on page 41.**

With relay (K4) energized, current from circuit breaker (F9) also flows to terminal K1 of CCU connector X5A, causing the CCU to activate the stop lights. For information on operation of the stop lights, See "Stop Light Circuit Theory of Operation" on page 84.

position and solenoid (Y14), energized, air pressure is supplied to the park brake actuator. When air pressure in the park brake actuator reaches 550 kPa (5.5 bar) (79.8 psi), the contacts of park brake pressure switch (B18) open, interrupting the ground to terminal X3 of CCU connector X5B. This causes the CCU to send a signal through the CAN data line to the monitor display unit, which in turn, causes the Park Brake Light to go **OFF**.

MENU DISPLAY UNIT CIRCUIT THEORY OF OPERATION

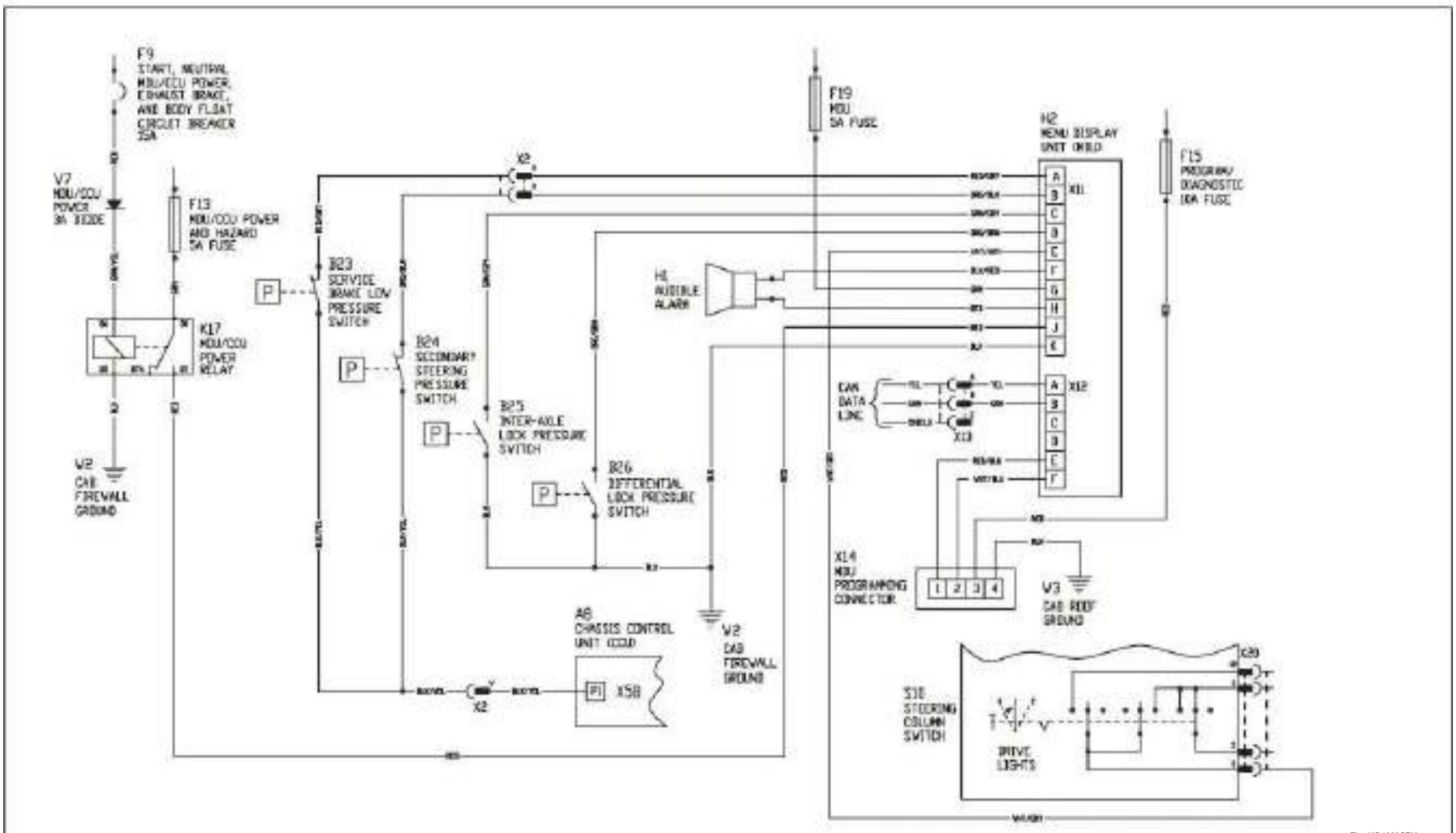

Figure 3-9

Menu Display Unit

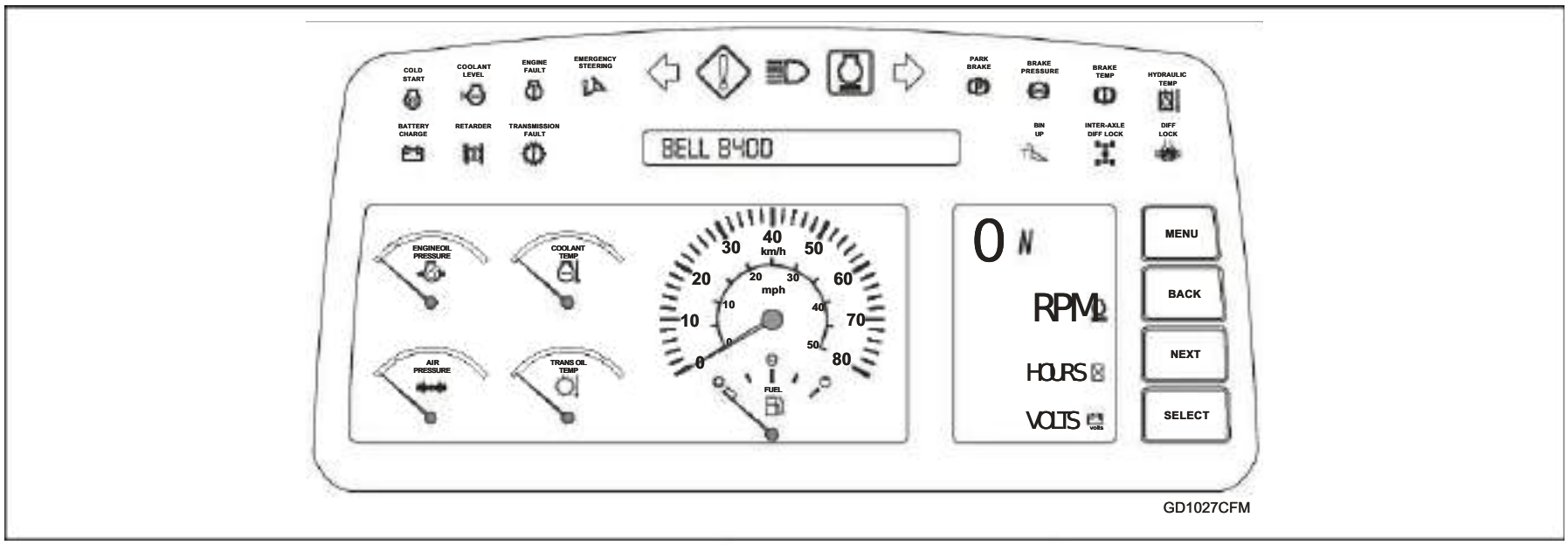

NOTE:For a description of all the MDU indicators and their function, See

If the MDU is writing data to memory, it sends a signal to energize an internal relay. This relay

▲ CAUTION

When a critical warning is detected, the red

Instrument Panel Functions in CHAPTER 8 of the OMM.

The MDU (H2) is used to display the status of machine functions. It is controlled by signals received from the TCU, CCU (A8) and ECU. The signals are transmitted across the CAN data line.

Unswitched power is available at terminal G of MDU connector X11 and terminal 30 of MDU/CCU Power Relay (K17). Turning the key switch to the **ON** position, sends current from circuit breaker (F9) to the coil of MDU/CCU power relay (K17), energizing the relay. With MDU/CCU power relay (K17) energized, current from MDU/CCU power and hazard fuse (F13) flows to terminal J of MDU connector X11.

If the MDU detects switched system voltage at terminal J of MDU connector X11 to be less than 17.5 ± 5 volts, the MDU will assume that a power down is in process.

uses unswitched power from terminal G of MDU connector X11 so that the write operation can be completed.

When two seconds have elapsed, and if the write operation is completed, the MDU signal is disabled causing the internal relay to de-energize and the MDU to shut down.

When the head light switch is in the **ON** position and the drive lights switch inside steering column switch (S10) is set to High Beam position, terminal E of MDU connector X11 is connected to ground. When this happens, the High Beam indicator on the MDU will come **ON**.

MDU programming connector (X14) is provided so software can be down loaded to the MDU using an RS232 interface and laptop computer.

When a critical warning is detected, the red Service light will come ON (or flash) and the audible alarm will sound. The machine and engine must be stopped immediately or serious damage may result. The flashing Service light and audible alarm alerts the operator to a critical service code condition indicated on the MDU display.

Gauges

The MDU contains a speedometer and the following gauges:

- Engine Oil Pressure.
- System Air Pressure.
- Engine Coolant Temperature.
- Transmission Oil Temperature.
- Fuel Level.

The sensors for these gauges provide analog inputs to CCU (A8). The CCU calculates the temperature, pressure and fuel level then sends the data across the CAN data line to the MDU. When the MDU receives the sensor data, it displays the value on the appropriate gauge as a needle position, then moves the associated needle to such position.

The needle of the fuel, pressure and temperature gauges will deflect to the far left of the scale when communications across the CAN data line are lost or if a sensor error is detected.

Engine Oil Pressure

The red Service indicator will flash and audible alarm (H1) will sound continuously when the engine oil pressure is less than a specified pressure at a given engine r.p.m.

- 50 r.p.m. = 20 kPa (0.2 bar (3.0 psi))
- 600 r.p.m. = 50 kPa (0.5 bar (7.3 psi))
- 1000 r.p.m. = 90 kPa (0.9 bar (13.0 psi))
- 1400 r.p.m. = 130 kPa (1.3 bar (18.9 psi))
- 1800 r.p.m. = 160 kPa (1.6 bar (23.2 psi))
- 2200 r.p.m. = 200 kPa (2.0 bar (29.0 psi))
- 2600 r.p.m. = 250 kPa (2.5 bar (36.3 psi))
- 3000 r.p.m. = 250 kPa (2.5 bar (36.3 psi))

Engine Coolant Temperature

When the engine coolant temperature reaches 103° C (217.4° F) (gauge needle at start of red), the red Service indicator will come **ON** and audible alarm (H1) will sound intermittently. "**ENG TEMP TOO HIGH**" will show on the message display.

When the engine temperature reaches 108° C (226.4° F) (gauge needle at middle of red), the red Service indicator will come **ON** and audible alarm (H1) will sound continuously. "**ENG TEMP TOO HIGH**" will show on the message display.

Transmission Oil Temperature

When the transmission temperature reaches 110° C (230° F) (gauge needle at start of red), the red Service indicator will come **ON** and audible alarm (H1) will sound intermittently. "**TRANS TEMP TOO HIGH**" will show on the message display.

When the transmission temperature reaches 115° C (239° F) (gauge needle at middle of red), the red Service indicator will come **ON** and audible alarm (H1) will sound intermittently. "**TRANS TEMP TOO HIGH**" will show on the message display.

Air System Pressure

When the system air pressure is at 550 kPa (5.5 bar (79.8 psi)) (gauge needle at start of red) or less, the red Service indicator will flash and audible alarm (H1) will sound intermittently. "**SYS AIR PRES TOO LOW**" will show on the message display.

Speedometer

The speedometer is calibrated to show the machine speed in Km/h and m.p.h. The transmission output shaft speed sensor sends a signal to the TCU representing the speed of the output shaft. The TCU transmits the speed sensor data to the MDU across the CAN data line. The MDU uses the data to move the speedometer needle in correlation to machine travel speed.

If speedometer seems to be miscalibrated, check machine model on the MDU at start-up and check the tire size in the menu structure of the MDU. For information on accessing the menu structure, See CHAPTER 8 in the OMM.

Pressure Switches

The following pressure switches send their signals directly to the MDU:

- Service Brake Low Pressure Switch (B23).
- Secondary Steering Pressure Switch (B24).
- Inter-Axle Lock Pressure Switch (B25).
- Differential Lock Pressure Switch(B26).

Service Brake Low Pressure Switch

The contacts of service brake low pressure switch (B23) are open during normal operation. When oil pressure in the service brake system decreases to 12 300 kPa (123 bar) (1784 psi), the contacts of pressure switch (B23) will close, sending a signal to terminal A of MDU connector X11.

When this happens, the Brake Pressure Light on the MDU will come ON, the Service light will flash, and audible alarm (H1) will sound.

Secondary Steering Switch

The contacts of secondary steering pressure switch (B24) are open during normal operation.

When oil pressure in the main hydraulic system

Inter-Axle Lock Pressure Switch

When the inter-axle lock is engaged, the air pressure to the inter-axle lock actuator is sensed by the inter-axle lock pressure switch (B25).

When the air pressure reaches 550 kPa {5.5 bar) 79.8 psi)} the pressure switch contacts close, connecting terminal "**C**" of MDU connector X11 to ground.

When this happens the "Inter-Axle DIFF LOCK) light on the MDU will come **ON**.

Differential Lock Pressure

When the differential lock is engaged, the air pressure to the differential Lock actuator is sensed by differential lock pressure switch (B26).

When the air pressure reaches 550 kPa {5.5 bar (79.8 psi)} the pressure switch contacts X11 to ground. When this happens, the Diff Lock light on the MDU will come **ON**.

decreases to 500 kPa {5 bar (72.5 psi)} the contacts of pressure switch (B24) close, sending a signal to terminal **B** of MDU connector X11.

When this happens, the secondary steering (marked EMERGENCY STEERING) light on the MDU will come **ON**, the service light on the MDU will come **ON**, the Service light will flash and audible alarm (H1) will sound.

Turn Signal And 4-Way Flasher Circuit Theory of Operation

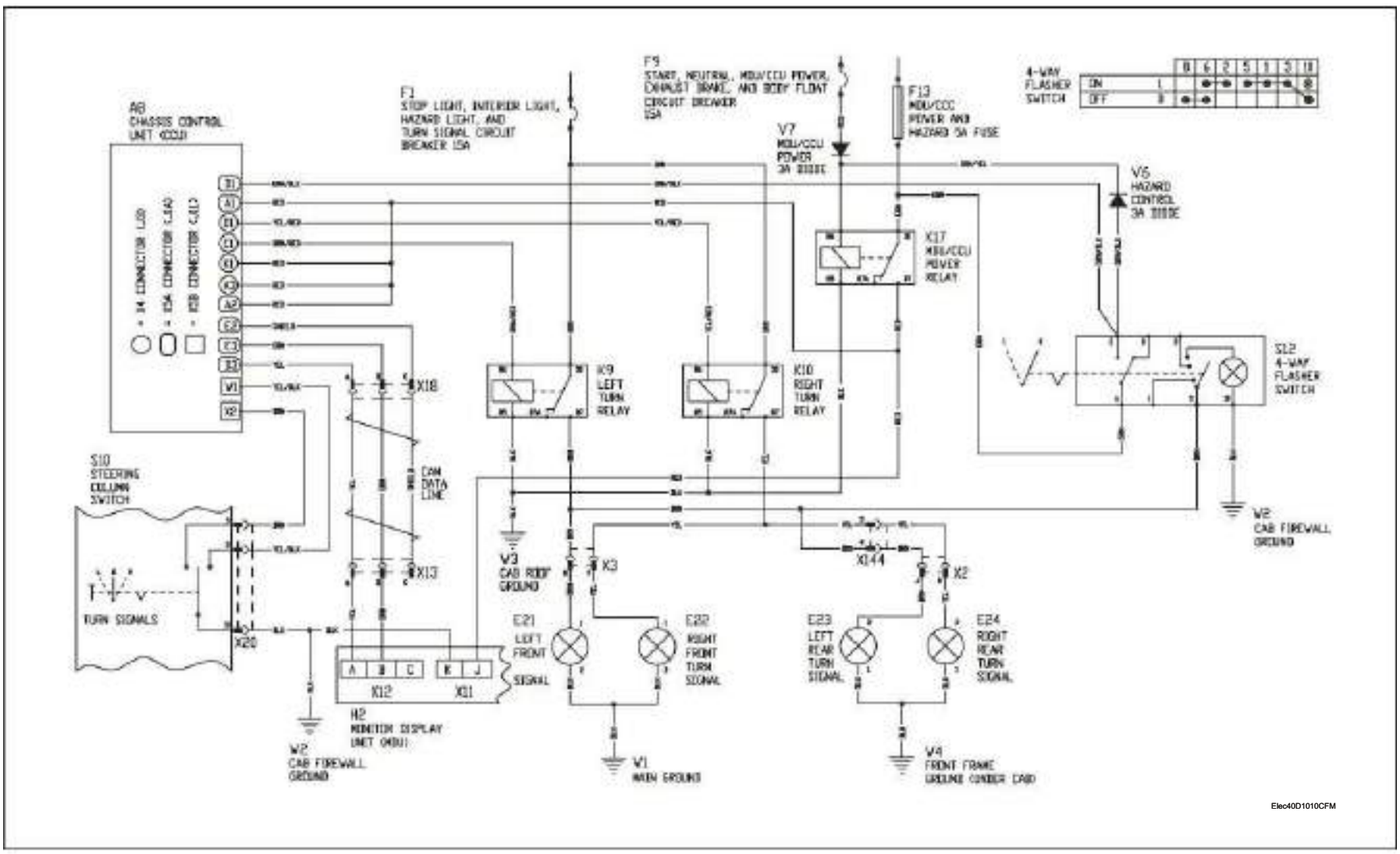

Figure 3-110

Unswitched power from circuit breaker (F1) is available at terminal 30 of left turn relay (K9) and right turn relay (K10). Unswitched power from MDU/CCU power and hazard fuse (F13) is available at terminal 6 of 4-way flasher switch (S12) and terminal 30 of MDU/CCU power relay (K17).

Turn Signal

Moving the lever of steering column switch (S10) to the left-turn position connects terminal X2 of CCU (A6) connector X5B to ground.

When this happens, the CCU sends pulsing DC current out terminal C1 of connector X4 to the coil of left turn relay (K9), causing the relay to continuously energize and de-energize.

The energizing and de-energizing relay causes

When the key switch is in the ON position, current from circuit breaker (F9) flows to the coil of the MDU/CCU power relay (K17), energizing the relay.

With relay (K17) energized, current from MDU/CCU power and hazard fuse (F13) flows to the CCU and MDU, powering the controllers.

If the key switch is in the OFF position, but 4-way flasher switch (S12) is moved to the ON position, unswitched current from fuse (F13) flows into terminal 6 of 4-way flasher switch (S12), then flows out terminal 2 to the coil of relay (K17), energizing the relay.

With relay (K17) energized current from fuse (F13) flows to the CCU and MDU.

During this time the 4-way flasher switch provides

current from circuit breaker (F1) to pulse as it flows to left front turn signal (E23), causing these lights to flash. The CCU also sends a signal across the CAN data line to the MDU, causing the Left Turn Arrow to flash.

Moving the lever of steering column switch (S10) to the right-turn position connects terminal W1 of CCU connector X5B to ground.

When this happens, the CCU sends pulsing DC current out terminal D1 of connector X4 to the coil of the right turn relay (K10), causing the relay to continuously energize and de-energize.

The energizing and de-energizing relay causes current from circuit breaker (F1) to pulse as it flows to right front turn signal (E22) and right rear turn signal (E24), causing these lights to flash.

The CCU also sends a signal across the CAN data line to the MDU, causing the Right Turn Arrow to flash.

Four-Way Flasher

Because the CCU and MDU are essential for the 4-way flashers to function, it is necessary that the CCU and MDU receive power during 4-way flashers activation whether key switch is in the **ON** or **OFF** position.

From terminal 2 of 4-way flasher switch (S12), current also flows to terminal D1 of CCU connector X5A.

When this happens, the CCU sends pulsing current out both terminals C1 and D1 of connector X4.

The pulsing current simultaneously energizes and de-energizes left turn relay (K9) and right turn relay (K10).

The relays, in turn, cause current from circuit breaker (F1) to pulse as it flows to turn signals (E21 - E24), causing all four lights to flash.

This pulsing current also flows back to 4-way flasher switch (S12) at terminal 5, causing the light in the 4-way flasher switch to flash.

The CCU also sends a signal across the CAN data line to the MDU, causing both the Left Turn Arrow and the Right Turn Arrow to flash.

If the lever of the steering column switch (S10) is moved to left-turn position with the 4-way flasher switch in the **ON** position, the CCU causes the left turn signals to flash while the right turn signals stay continuously lit.

The opposite is true when the steering column switch lever is moved to the right-turn position with 4-way flasher switch in the **ON** position.

Stop Light Circuit Theory of Operation

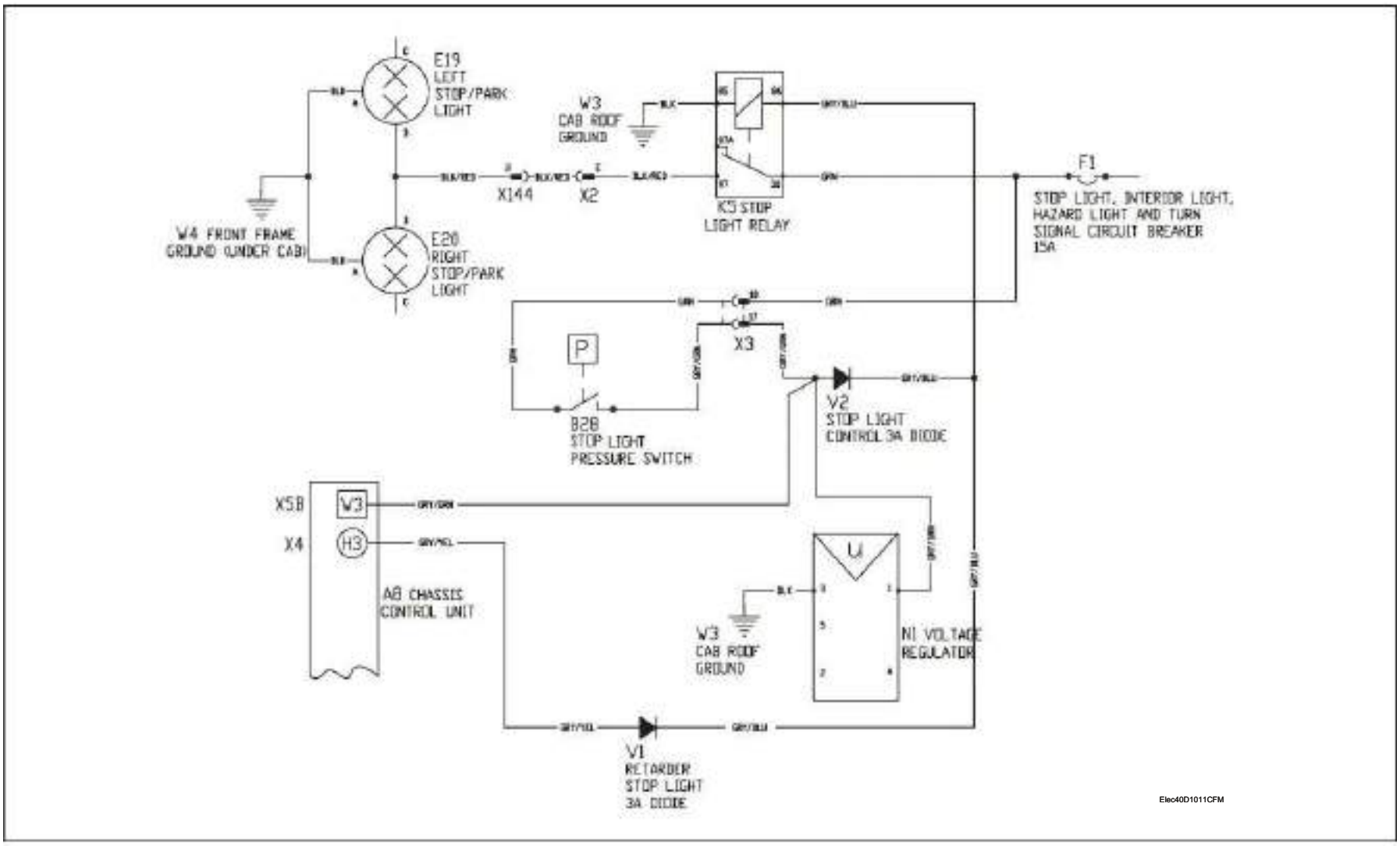

Figure 3-111

Unswitched power from circuit breaker (F1) is available at stop light pressure switch (B28) and terminal 30 of stop light relay (K5).

When the service brakes are applied, hydraulic pressure closes the contacts of stop light pressure switch (B28), allowing current from circuit breaker (F1) to flow to the coil of stop light relay (K5), thus energizing the relay.

With relay (K5) energized, current flows from

The signal to voltage regulator (N1) puts the retarder system at 100% retardation.

For more information on the retarder system, **See "TRANSMISSION CONTROL UNIT AND RETARDER CIRCUIT THEORY OF OPERATION" on page 66**.

The retarder and/or exhaust brake will activate the stop lights if the service brakes are not applied. During the time the retarder and/or exhaust brake

circuit breaker (F1) to left stop/park light (E20), causing the stop lights to come **ON**.

NOTE: Contacts of stop light pressure switch (B28) open and close at 500 kPa {5 bar (72.5 psi)}.

With the contacts of stop light pressure switch (B28) closed, current also flows to terminal W3 of CCU (A8) connector X5B and terminal 1 of retarder voltage regulator (N1).

The signal to the CCU lets the control system know the service brakes are applied.

is active, the CCU sends current out terminal H3 of connector X4 to the coil of the stop relay (K5), energizing the relay, which causes the stop lights to come **ON**.

The retarder stop light control diode (V1) prevents current from stop light pressure switch (B28) from reaching terminal H3 of CCU connector X4 whenever the service brakes are applied.

Stop light control diode (V2) prevents current flowing from terminal H3 of CCU connector X4 from reaching terminal 1 of voltage regulator (N1) and terminal W3 of CCU connector X5B whenever the retarder and/or exhaust brake is active, but service brakes are not applied.

Backup Alarm and Backup Light Circuit Theory of Operation

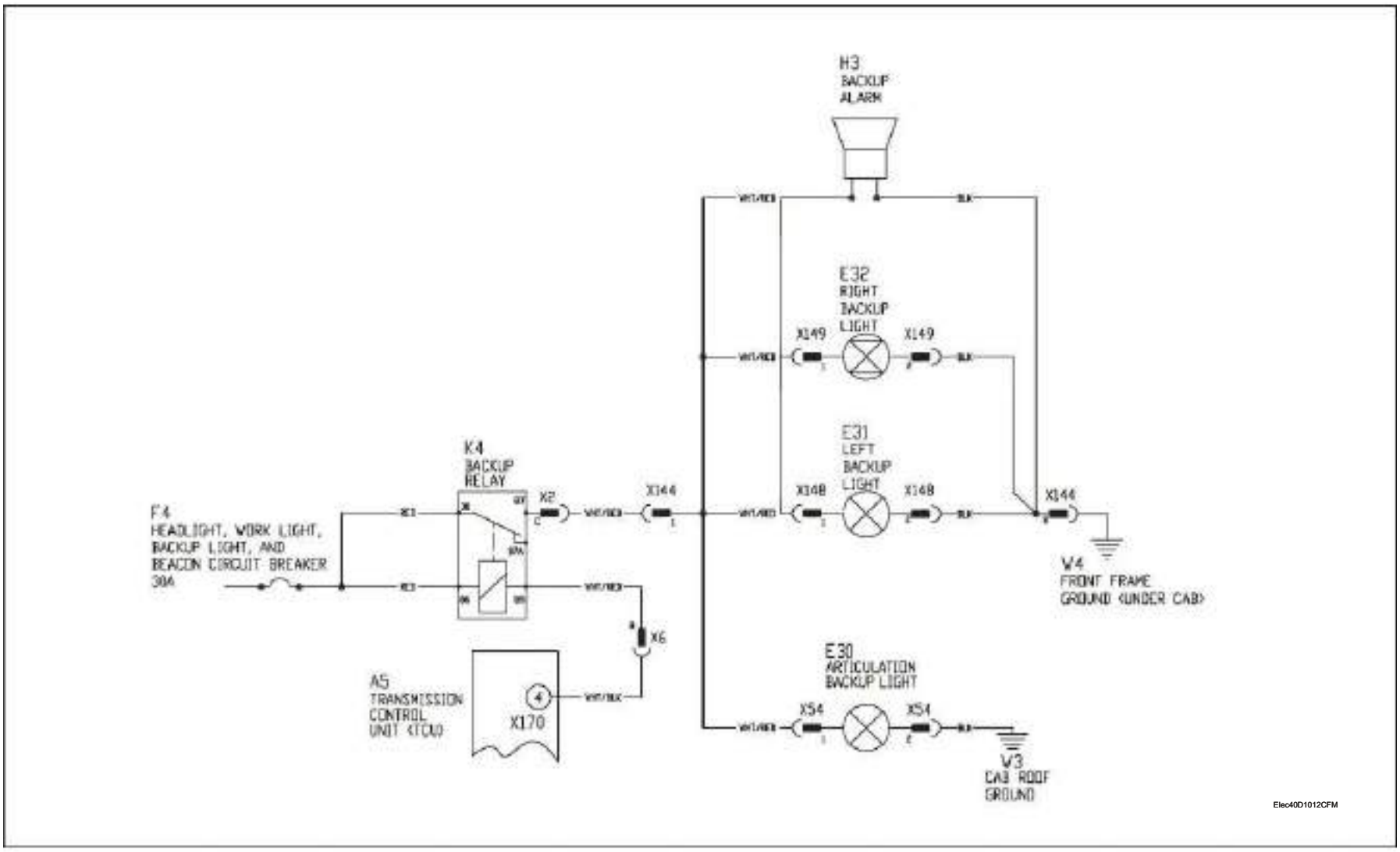

Figure 3-112

When the key switch is in the **ON** position, power from circuit breaker (F4) is available to terminal 30 and 86 of backup relay (K4).

With relay (K4) energized, current flows to left and right backup lights (E31 and E32) and, if equipped, to articulation backup light (E30), causing the

When the operator selects revers gear, the TCU (A5) supplies a ground to relay(K4), energizing the relay.

Current also flows to backup alarm (H3), activating the backup alarm.

Wiper/Washer Circuit Theory of Operation

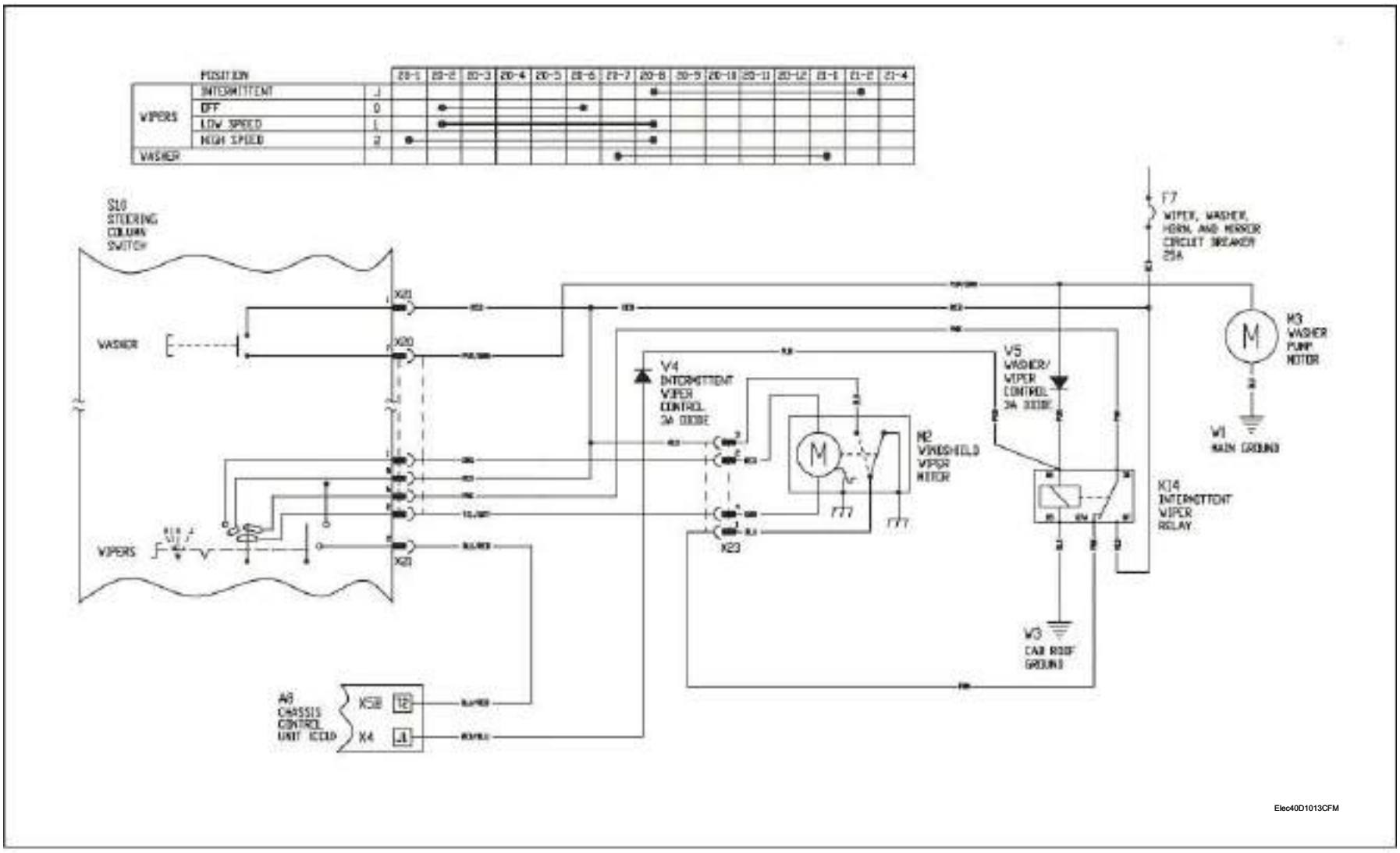

Figure 3-113

When the key switch is in the ON position, power from circuit breaker (F7) is available at the following locations:

- Intermittent Wiper Relay (K14) - Terminal 87
- Steering Column Switch (S10) - Terminal 8 of connector (X20)
- Steering Column Switch (S10) - Terminal 1 of connector (X21)
- Windshield Wiper Motor (M2) - Terminal 3 of connector (X23)

Intermittent Wiper Control

When the wiper control sleeve on the steering column switch lever is turned to position "I", current from circuit breaker (F7) flows in terminal 8 of connector X20, then out terminal 2 of connector X21, to terminal T2 of CCU (A6) connector X5B.

The CCU will then send an intermittent current out terminal J1 of connector X4 to the coil of intermittent wiper relay (K14), energizing the relay intermittently.

During the time intermittent wiper relay (K14) is energized, current from circuit breaker (F7) will flow across the relay contacts, to terminal 6 of connector X20.

The current then flows out terminal 2 of wind shield wiper motor (M2), activating the motor intermittently.

The purpose of intermittent wiper control diode (V4) is to block current flow to terminal J1 of CCU connector X4 when only the washer circuit is activated.

The timing intervals of the intermittent wipers can be adjusted so the wiper will activate anywhere between 3 and 20 seconds.

NOTE: The intermittent wipers status and timing is digitally displayed in the menu structure of the MDU, when accessed. For information on accessing the menu structure, See MDU - Menu Function CHAPTER 8 in the OMM.

Low and High Speed Wiper Control

When the wiper control sleeve on the steering column switch lever is turned to position "1", current from circuit breaker (F7) flows in terminal 8 of connector X20, then out terminal 2 of connector X20 to terminal 4 of connector X23 on wind shield wiper motor (M2), activating the motor in low speed.

When the wiper control sleeve on the steering column switch lever is turned to position "II", current from circuit breaker (F7) flows in terminal 8 of connector X20, then out terminal 1 of connector X20 to terminal 2 of connector X23 on wind shield wiper motor (M2), activating the motor in high speed.

Washer Control

Pushing the momentary wind shield washer button allows current from circuit breaker (F7) to flow in terminal 1 of connector X21, then out terminal 7 of connector X20 to washer pump motor (M3), activating the washer pump motor.

At the same time, current flows through washer/wiper control diode (V5) to the coil of intermittent wiper relay (K14), energizing the relay.

With relay (K14) energized, current from circuit breaker (7) will flow across the relay contacts, to terminal 6 of connector X20.

The current then flows out terminal 2 of connector X20 to terminal 4 of connector X23 on wind shield wiper motor (M2), temporarily activating the wiper motor.

The purpose of washer/wiper control diode (V5) is to block current flow to the washer pump when only the intermittent wiper circuit is activated.

Wiper Park Control

When the wiper control sleeve on the steering column switch lever is turned to position "0" and the wiper is not at Park position, the contacts in wind shield wiper motor (M2) are closed.

With the wiper motor contacts closed, current from circuit breaker (F7) is allowed to flow to terminal 5 of wiper motor connector X23, across the wiper motor contacts, then out terminal 1 of connector X23 to terminal 87A of intermittent wiper relay (K14).

The current flows across the normally closed relay contacts to terminal 6 of connector X20.

Because the wiper switch is in the OFF position, current will flow out terminal 2 of connector X20 to terminal 4 of connector X23, activating the wiper motor.

When the wiper reaches the Park position, the wiper motor contacts open, thus deactivating the wiper motor.

Battery Balancer And 12-Volt Accessory Circuit Theory of Operation

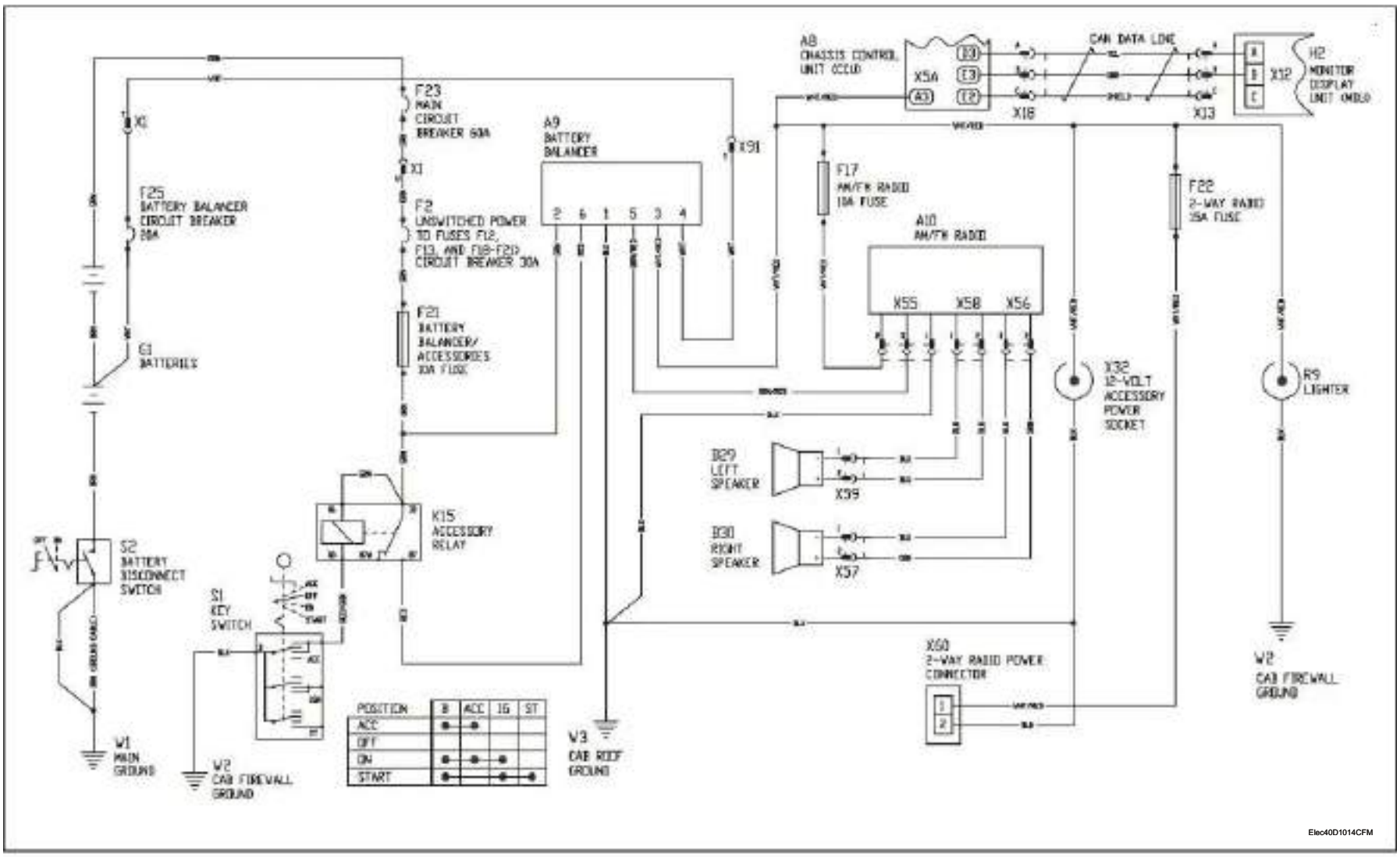

Figure 3-114

The main function of battery balancer (A9) is to equalize the charge between the two batteries. It does this by directing more charging current to the bottom battery voltage equals 1/2 system voltage.

The battery balancer accomplishes this by sensing unswitched single battery voltage (12+ volts) at terminal 4. It divides the system voltage by two, then compares the results with the single battery voltage.

If a difference exists, the battery balancer will take current available at terminal 2 and send the extra current out terminal 4 to the bottom battery until the batteries are "balanced" within 0.5 volts.

Turning the key switch to the ON position, sends system voltage to terminal 6 of the battery balancer. The voltage at terminal 6 energizes an internal relay that connects terminals 3 and 4 of the battery voltage balancer.

When this happens, the single battery voltage (12+ volts) is sent to the AM/FM radio (A10) 12-Volt accessory power socket (X32), lighter (R9), 2-way radio power connector (X60) and to terminal A3 of connector X5A on CCU (A8).

The CCU senses the single battery voltage (12+ volts) from terminal 3 and also the system voltage (24+ volts).

It then divides the system voltage by two, then compares the results with the single battery voltage.

If the difference is more than 1.5 volts, the CCU sends a signal through the CAN data line to the MDU (H2), causing the Battery Charge Light to come **ON**.

NOTE:1. The battery charge voltage is digitally displayed in the MDU, when accessed. For more information on accessing the menu structure, see MDU function, CHAPTER 8 in the OMM.

2. When the battery disconnect switch is turned to OFF position, there is no 12-volt power available for the AM/FM radio station memory presets and clock. As a result, any station preset and clock setting are lost. The station presets will need to be reprogrammed and the clock reset when the battery disconnect switch is turned to the ON position.

Air Conditioning Circuit Theory of Operation

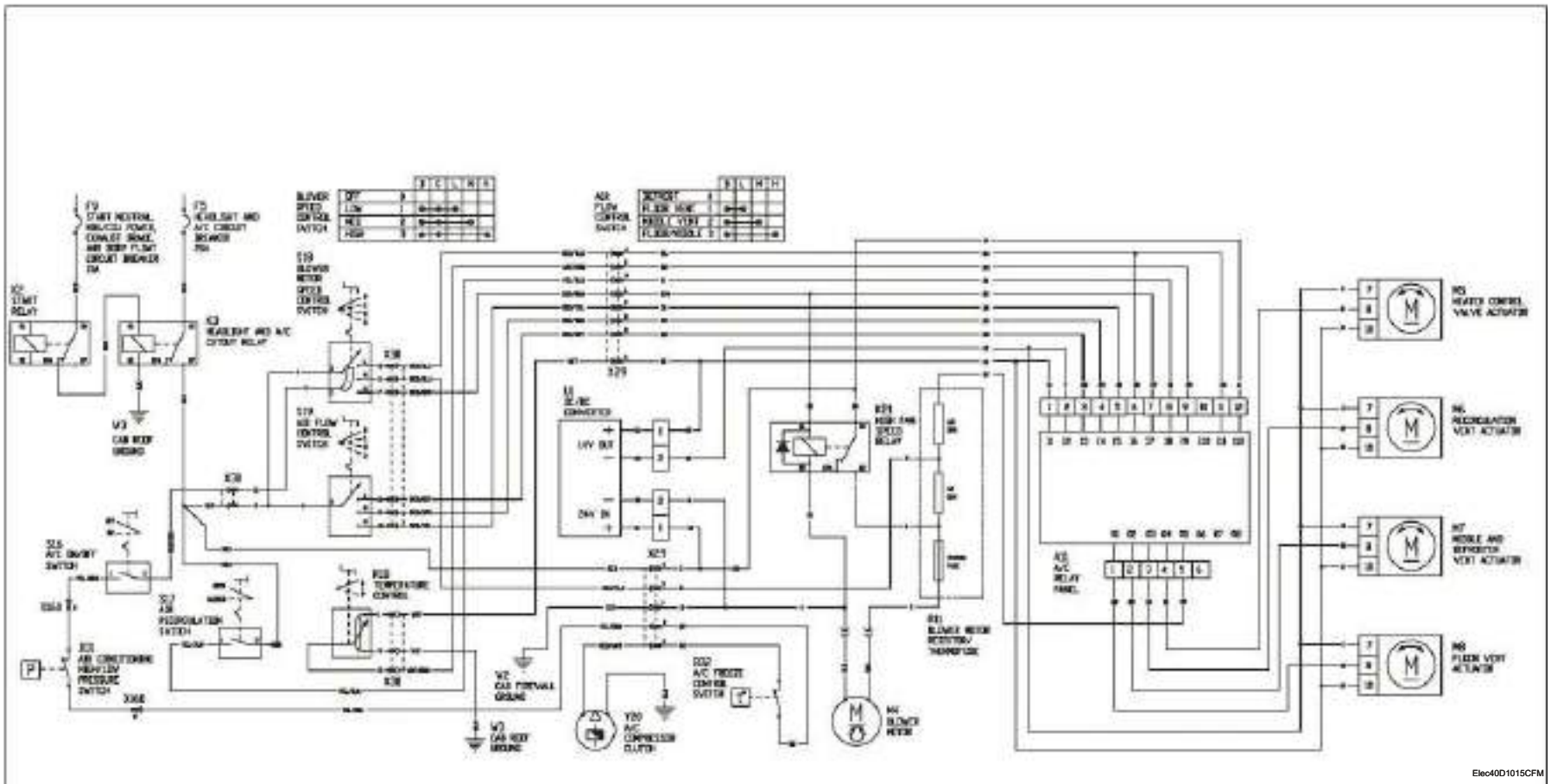

Elec40D1015CFM

Figure 3-115

When the key switch is in the **OII** position, current flows from circuit breaker (F9), across the normally closed contacts of start relay (K2), to the coil of head light and A/C cut-out relay (K3), energizing the relay. With relay (K3) energized, current from circuit breaker (F5) is available at the following components:

- Air re-circulation switch (S17).
- Blower motor speed control switch (S18).
- Air flow control switch (S19).
- DC/DC convertor (U1).
- High fan sped relay (K21).
- A/C relay panel (A11).

Whenever the engine is cranked, current flowing from circuit breaker (F9) to the coil of head light and A/C cut-out relay (K3) is interrupted, causing the relay to de-energize.

With relay (K3) de-energized, the air conditioning system de-activates so the starting load on the engine is reduced. For more information on the starting circuit, **See "STARTING AND CHARGING CIRCUIT AND THEORY OF OPERATION" on page 58**.

Air Conditioning System

For the air conditioning system to operate, A/C on/off switch (S16) must be in the **On** position and blower motor speed control switch (S18) must be in any position but the **OFF** position.

As long as the contacts of air conditioning high/low pressure switch (B31) and A/C freeze control switch (B32) are closed, current from circuit breaker (F5) will flow to blower motor speed control switch (S18) at terminal B.

The current flows out terminal C of the blower switch, through A/C on/off switch (S16) and A/C freeze control switch (B32), to A/C compressor clutch (Y20), energizing the clutch.

Air Conditioning High/Low Pressure Switch

The air conditioning high/low pressure switch (B31) protects the A/C system if the refrigerant pressure becomes too high. It also protects the A/C system if the pressure becomes too low caused by loss of refrigerant. If either of these conditions occur, the switch contacts will pen and cause A/C clutch compressor (Y20) to de-energize.

A/C Freeze Control Switch

The A/C freeze control switch (B32) senses the temperature in the evaporator core through a gas-filled capillary tube. The switch closes when the evaporator temperature is above the switch setting and opens when the evaporator is cooled to the switch setting.

DC/DC Converter

The heater valve actuator and the free vent actuators require approximately 14 volts to operate.

Because of this, DC/DC convertor (U1) is needed to convert the system voltage (27.5 ± 1.5 volts) to the required voltage.

The 14 volts is supplied to terminal I-1 of A/C relay panel (A11), terminal 1 of temperature control(R10) and to terminal 10 on all the actuators.

Blower Motor Speed Control Switch

When the blower motor speed control switch (S8) is in the **LOW** position, current flows from terminal 5 of the blower switch to terminals I-6 and I-11 of A/C relay panel (A11).

The current at terminal I-11 energizes a relay on the A/C relay panel.

With this "onboard" relay energized, current is allowed to flow in terminal I-12 of the A/C relay panel, then out terminal O-5 to Blower Motor Resistor/Thermofuse (R11).

The current flows through the 3.5 ohm resistor, the 1.2 ohm resistor and the thermofuse, then to blower motor (M4), activating the motor in low speed.

At the same time, current at terminal I-5 energizes another onboard relay that directs current from the 14 volt system out terminal O-3, to terminal 8 of re-circulation vent actuator (M6).

If air re-circulation switch (S17) is in the ON position, the vent actuator will cause the re-circulation flapper door to move to the fully open position, thus allowing outside air to enter the cab.

When the blower motor speed control switch (S18) is in the **MEDIUM** position, current flows from terminal 4 of the blower switch directly to blower motor resistor/thermofuse (R11). The current flows through the 1.2 ohm resistor and the thermofuse, then to blower motor (M4), activating the motor in medium speed.

If air re-circulation switch (S17) is in the **ON** position and blower speed switch in the **MEDIUM** position, the re-circulation flapper door will move to the half-way position.

When the blower motor speed control switch (S18) is in the HIGH position, current flows from terminal 7 of the blower switch to the coil of high fan speed relay (K21), energizing the relay.

With relay (K21) energized, current flows to blower motor resistor/thermofuse (R11).

The current only flows through the thermofuse, then to blower motor (M4), activating the motor in high speed.

At the same time, current flows to terminal I-7 of A/C relay panel (A11), energizing an onboard relay that connects system ground to terminal O-3.

If air re-circulation switch (S17) is in the **ON** position, the ground is supplied to terminal 8 of Re-circulation vent actuator (M6), causing actuator (M6) to move the re-circulation flapper door to the fully closed position. Air is re-circulated through the cab.

Air Re-circulation Switch

When air re-circulation switch (S17) is in the OFF position, no current flows from the switch.

The re-circulation flapper door stays in the fully open position regardless of blower speed setting.

When the air re-circulation switch is in the **ON** position, current flows to terminal I-5 of A/C relay panel (A11).

The current energizes an onboard relay that directs current from the 14 volt system out terminal O-3 to terminal 8 of re-circulation vent actuator (M6), activating the vent actuator.

The vent actuator moves the re-circulation flapper door to the fully closed position, causing the air to re-circulate through the cab.

Air Flow Control Switch

When air flow control switch (S19) is in the **DEFROST** position, no vent actuators are activated. Air flow is directed to the wind shield.

When the air flow control switch is in the **FLOOR VENT** position, current flows out terminal I-3 of A/C relay panel (A11).

The current energizes an onboard relay that directs current from the 14 volt system out terminal O-1 to terminal 8 of floor vent actuator (M8), activating the vent actuator and causing air flow to be directed to the floor vents.

When the air flow control switch is in the **MIDDLE VENT** position, current flows out terminal 9 of air flow switch to terminal I-4 of the A/C relay panel.

The current energizes an onboard relay that directs current from the 14 volt system out terminal O-2 to terminal 8 of the middle and de-froster vent actuator (M7), activating the vent actuator and causing air flow to be directed to the middle vents.

When the air flow control switch is in the **FLOOR/ MIDDLE VENT** position, current flows out terminal 10 of air flow switch to terminal I-5 of the A/C relay panel.

The current energizes an onboard relay that directs current from the 14 volt system out terminal O-1 and O-2 to terminal 8 of middle and defroster vent actuator (M7) and floor vent actuator (M8), activating both vent actuators and causing air flow to be directed to both the middle vents and the floor vents.

Temperature Control

The temperature control (R10) is a variable resistor that sends an analog current from the 14 volt system to terminal I-9 of A/C relay panel (A11).

The current flows through an onboard fixed resistor, out terminal O-4 of the relay panel, to terminal 8 of heater control valve actuator (M5), activating the valve actuator.

The actuator opens and closes a valve in the heater core line. The movement of the valve corresponds directly with the position of temperature control (R10).

Electric Mirror Circuit Theory of Operation

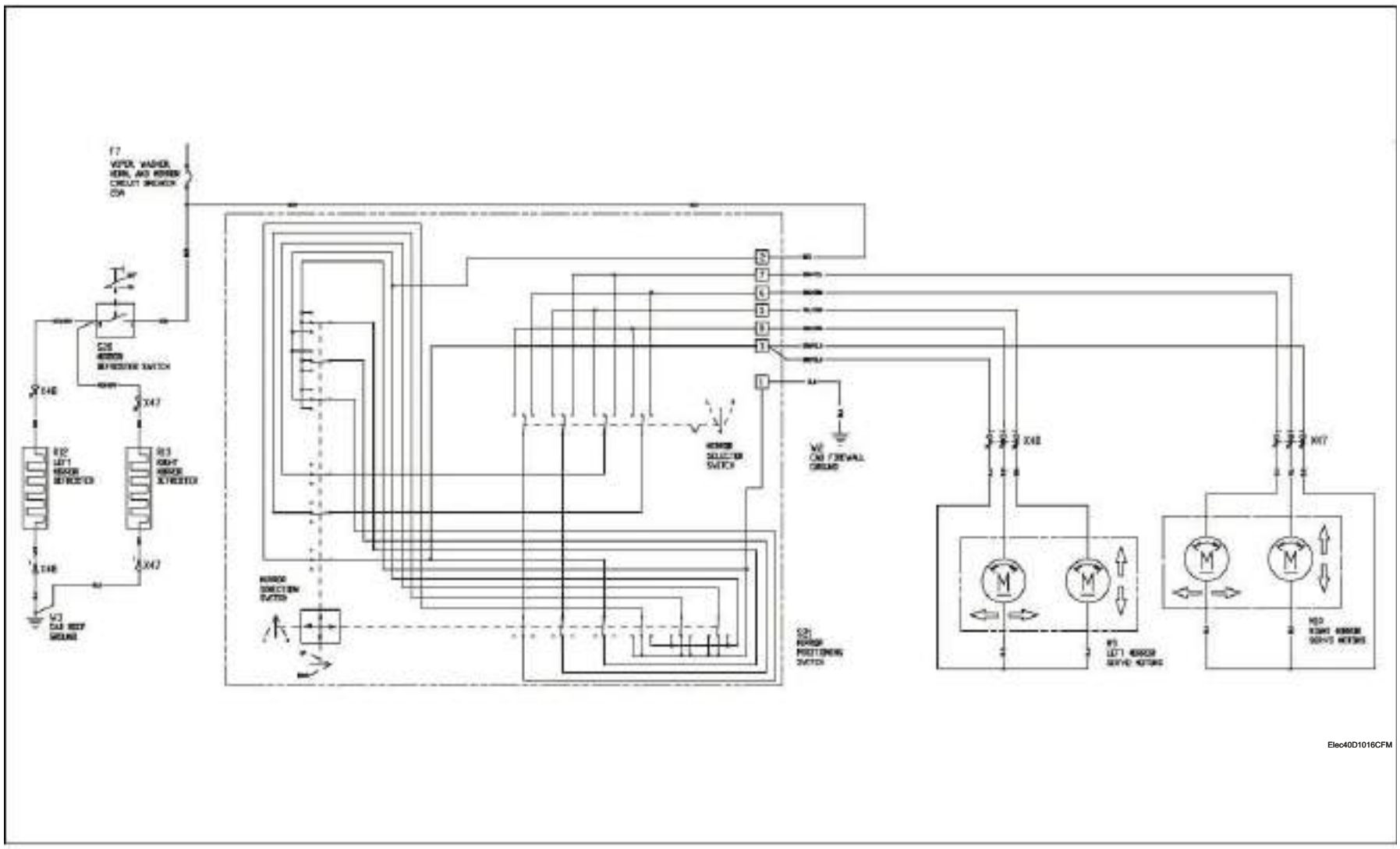

Figure 3-116

Mirror Positioning Circuit

Movement of the optional electric mirrors is controlled by mirror positioning switch (S21). The mirror positioning switch is a multi-functional switch consisting of a mirror selector switch and a mirror direction switch.

The mirror selector switch enables the circuitry of the mirror to be adjusted. Moving the switch to the left detent allows the left mirror to be adjusted. Moving the switch to the right detent allows the right mirror to be adjusted. Moving the switch to the centre detent disables both the mirrors.

The mirror switch is a four-way switch that operates two servo motors in each mirror. One servo motor controls the mirror up and down movement. The other servo motor controls mirror side-to-side movement.

NOTE: The following discusses the operation of the left mirror. Operation of the right mirror is similar.

Up/Down Positioning

When the mirror selector switch is at position "L" and the mirror direction switch is moved to the **UP** position, ground is supplied to left servo motors (M9) at terminals 4 and 5 of connector X48.

At the same time, power is available at terminal 3 of connector X48. Because of this, current flows through the side-to-side motor of left mirror servo motors (M9), but in the opposite direction. This causes the motor to activate in reverse which rotates the mirror lens to the right.

The side-to-side motor of left mirror servo motors (M9) does not activate because power is supplied to both sides of the motor during this time.

Left/Right Positioning

When the mirror selector switch is at position "L" and the mirror direction switch is moved to the **LEFT**, ground is supplied to left servo motors (M9) at terminals 3 and 5 of connector X48.

At the same time, power is available at terminal 4 of connector X48. Current flows through the side-to-side motor of left mirror servo motors (M9), activating the motor which causes the mirror lens to rotate to the **left**.

The up/down motor of left mirror servo motor (M9) does not activate because ground is supplied to both sides of the motor during this time.

When the mirror selector switch is at position "L" and the mirror direction switch is moved to the **RIGHT**, ground is supplied to left servo motors (M9) at terminals 4 of connector X48.

At the same time, power is available at terminal 3 and 5 of connector X48. Because of this, current flows through the side-to-side motor of left mirror servo motors (M9), but in the opposite direction. This causes the motor to activate in reverse which rotates the mirror lens to the right.

Unloader Valve Heater Circuit Theory of Operation

the unloader valve, located inside the air dryer, contains unloader valve heater (R5). The purpose of this heating element is to prevent the unloader valve from freezing so the purge cycle can continue to remove moisture from the pneumatic system.

The heating element is controlled by an internal temperature switch. The temperature switch contacts are closed when the temperature is below 4.4° C (40° F). The contacts are open when the temperature is above 29.5° C (85° F).

When the temperature is below 4.4° C (40° F) and the key switch is in the **ON** position, current flows through circuit breaker (F24) to unloader valve heater (R5).

The current flowing through the heating element warms the unloader valve to prevent moisture from freezing inside the valve.

of connector X48. Because of this, current flows through the up/down motor of left mirror servo motors (M9), activating the motor which causes the mirror lens to rotate upward.

The side-to-side motor of left mirror servo motor (M9) does not activate because ground is supplied to both sides of the motor during this time.

When the mirror selector switch is at position "L" and the mirror direction switch is moved to the **DOWN** position, ground is supplied to left mirror servo motors (M9) at terminal 3 of connector X48. At the same time, power is available at terminals 4 and 5 of connector X48.

Because of this, current flows through the up/down motor of left mirror servo motors (M9), but in the opposite direction. This causes the motor to activate in reverse which rotates the mirror lens downward.

does not activate because ground is supplied to both sides of the motor during this time.

Mirror Defroster Circuit

The optional electrical mirrors contain a heating element that is attached to the mirror's reflective lens for defrosting and defogging purposes.

With both the key switch and mirror defroster switch (S20) in the ON position, current flows through left mirror defroster (R12) and right mirror defroster (R13). Heat is produced because of resistance in the heater elements.

CHAPTER 3. ELECTRICAL SYSTEM

SECTION 3. REFERENCES

SERVICE CODE DIAGNOSTICS - AFTER MACHINE REPAIR

After repairing a malfunction involving a service code, deletion of the service code is necessary to verify if malfunction was indeed repaired.

- To delete a service code that displays on the MDU, See Delete MDU Displayed Service Codes.
- To delete a service code that displays on the transmission shift control, See Delete Transmission Shift Control Displayed Service Codes.

Delete MDU Displayed Service Codes

NOTE: The MDU displayed codes can be read and deleted by one of the following methods:
1. Menu Display Unit
2. Service ADVISOR ™ application. (See instructions that came with the Service ADVISOR ™).

To delete all service codes from memory using the MDU, perform the following:

1. Go to the Diagnostics Menu "C01" in the menu structure of the MDU. For information on accessing the Diagnostic Menu, **See MDU - Menu Function, CHAPTER 8 in the OMM.**

2. Display the service code, then press and hold the **SELECT** key. The monitor will beep and the service code will be cleared.

3. Repeat step 2 for each service code until **END** is displayed.

Operate the machine, then access the Diagnostic Menu on the MDU to make sure the problem has been corrected and that the previously repaired service code or a new service code is not displayed. If a new service code exists, diagnose and repair the malfunction that is displayed, then repeat steps 1 - 3.

Delete Transmission Shift Control Displayed Service Codes

NOTE: The transmission service codes can be read and deleted by one of the following methods:
1. Transmission shift control.
2. Service ADVISOR application (See instructions that come with Service ADVISOR).
3. PRO-LINK ® 9000 Diagnostic Tool. (See instructions that come with PRO-LINK 9000).
The PRO-LINK diagnostic tool requires a special adapter harness 207663 to connect to the diagnostic connector (X15).

To delete service codes using the transmission shift control, perform the following:

Simultaneously push both the up and down buttons (1) and (2) on the push-button selector to enter the diagnostic display mode.

To delete all active indicators, push and hold the mode button (3) until the **MODE** indicator **LED** (4) flashes three times.

Release mode button.

To remove all inactive codes, push and hold the **MODE** button until the **LED** indicator flashes six times.

NOTE:All active indicators will be cleared at TCU power down.

Exit the diagnostic display mode by simultaneously pushing both the **UP** and **DOWN** buttons, or push one of the **D**, **N** or **Range** buttons.

Service Code Diagnostics - How Codes Are Displayed On Menu Display Unit

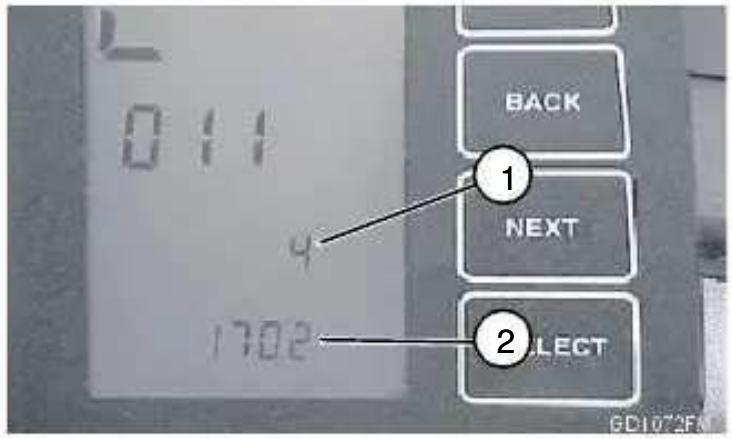

the service codes that display on the MDU follow the J1939 standard. The code consists of a SPN number (2) and a FMI number (1). These codes are written with the SPN number first, then the FMI number (e.g.:1702.4).

Service Code Diagnostics - How To Use Listing For Transmission Codes

The transmission control unit (TCU) provides the following responses to service codes to allow for safe transmission operation:

- Do Not Shift (DNS)
  - Release lockup clutch and inhibit lockup operation.
  - Inhibit all shifts.
  - Turns on the DNS caution indicator.
  - Display the range permitted.
  - Ignore any gear selection inputs from the gear shift control.
- Do Not Adapt (DNA)
  - The TCU stops adaptive shift control while code is active.
- Solenoid Off (SOL OFF)
  - All solenoids are commanded **OFF**.

NOTE:When solenoids A and B are electrically de-energized (OFF), the solenoids are hydraulically ON.

- Return TO Previous Range (RPR)
  - When the speed sensor ratio or C3 pressure switch tests associated with a shift are not successful, the TCU commands the same gear as commanded before the shift.
- Neutral - No Clutches (NNC)
  - When certain speed sensor ratio or C3 pressure switch tests are not successful, the TCU commands a neutral condition with no clutches engaged.
- Computer Operation Properly (COP)
  - Hardware protection that causes the TCU to reset if software gets lost.
- General Purpose Output (GPO)
  - Output signal from the TCU to control vehicle components or allow a special operating mode or condition.

Service Code Diagnostics - Engine Control Unit

NOTE: For information on how the service code is displayed on the menu display unit, See "Service Code Diagnostics - How Codes Are Displayed On Menu Display Unit" on page 98.

Code - Symptom	Problem	Solution
45.3 - Constant Throttle (EVB) Open Circuit.	Exhaust Brake Relay (K6). Broken or poor wire connection between ECU and exhaust brake relay (K6).	Check relay. **(See "Relay Test" on page 190)**. Check cab main harness (W10).
45.5 - Constant Throttle (EVB) Closed Circuit.	Exhaust Brake Relay (K6). Shorted wire between ECU and exhaust brake relay (K6).	Check relay. **(See "Relay Test" on page 190)**. Check cab main harness (W10).
98.0 - Oil Level Too High.	Excessive oil in crankcase.	Drain oil from crankcase until proper oil level is obtained.
98.1 - Oil Level Too Low.	Too little oil in crankcase.	Add oil to proper level. For type of oil, **(See CHAPTER 1 in the OMM)**.
98.14 - Oil Level Dangerously Low.	Oil leak. Worn engine.	Drain oil. Repair oil leak. Fill with correct viscosity oil. **(See CHAPTER 1 in the OMM)**. Repair or replace engine. **(See Engine, CHAPTER 4, SECTION 1 in the Repair Manual)**.

100.1 - Oil Pressure Low.	Oil pressure sensor (B5).	Replace oil pressure sensor.
100.14 - Oil Pressure Very low.	Oil pressure sensor (B5). Broken wire or poor connection. EUI controller or ECU.	Replace oil pressure sensor. Check front frame/engine harness (W7), engine main harness (W8) and cab main harness(W10). Replace control unit.

Code - Symptom	Problem	Solution
158.0 - Switched Voltage To Engine EUI Controller and ECU Too High.	Alternator.	Check alternator. Replace if necessary.
158.1 - Switched Voltage To Engine EUI Controller and ECU Too Low.	Alternator. Batteries.	Check alternator. Replace if necessary. Check batteries. Recharge or re[place as necessary.
625.2 - CAN Data Line Error Between EUI Controller And ECU.	Broken or shorted wire; poor connection.	Check front frame/engine harness (W7) and cab harness (W10).
625.14 - CAN Data Line Error With One Wire Capability Between EUI COntroller And ECU.	Broken wire or poor connection.	Check front frame/engine harness (W7) and cab harness (W10).
629.12 - ECU Internal Failure.	Faulty ECU.	Replace ECU. **(See “Remove and Install Engine Control Unit” on page 200)**.
1005.3 - Pulse Width Modulation Accelerator Pedal Position Sensor PWM Output Malfunction Open Circuit.	Accelerator pedal position sensor (B10). Broken wire or poor connection.	Check accelerator pedal position sensor. Replace sensor. Check cab main harness (W10).
1005.4 - Pulse Width Modulation Accelerator Pedal Position Sensor PWM Output Malfunction Closed Circuit.	Accelerator pedal position sensor (B10). Shorted wire.	Check accelerator pedal position sensor. Replace sensor. Check cab main harness (W10).
1006.3 - Exhaust Brake Open Circuit.	Exhaust brake relay (K6). Broken or poor wire connection between ECU and exhaust brake relay (K6).	Check relay. **(See “Relay Test” on page 190)**. Check cab main harness (W10).
1006.4 - Exhaust Brake Short To	Exhaust brake relay (K6).	Check relay. **(See “Relay Test” on page 190)**.

Ground.	Shorted wire between ECU and exhaust brake relay (K6).	Check cab main harness (W10).
1015.1 - Pulse Width Modulation Accelerator Pedal Position Sensor No Input Voltage.	Broken wire or poor connection.	Check connections of cab power harness (W9) and main cab harness (W10).

Code - Symptom	Problem	Solution
1015.3 - Pulse Width Modulation Accelerator Pedal Position Sensor Both PWM Signal #2 Missing.	Accelerator pedal position sensor (B10). Broken wire or poor connection.	Check accelerator pedal position sensor. Replace sensor. Check cab main harness (W10).
1015.4 - Pulse Width Modulation Accelerator Pedal Position Sensor Both PWM Signal #1 Missing.	Accelerator pedal position sensor (B10). Broken wire or poor connection.	Check accelerator pedal position sensor. Replace sensor. Check cab main harness (W10).
1015.5 - Pulse Width Modulation Accelerator Pedal Position Sensor Both PWM Signal Not Set or Programmed.	ECU not properly programmed for accelerator pedal position sensor.	Program ECU.
1015.6 - Pulse Width Modulation Accelerator Pedal Position Sensor Slow Idle Not Set or Programmed.	ECU not properly programmed for accelerator pedal position sensor.	Program ECU.
1015.7 - Pulse Width Modulation Accelerator Pedal Position Sensor Fast Idle Not Set or Programmed.	ECU not properly programmed for accelerator pedal position sensor.	Program ECU.

Service Code Diagnostics - Electronic Unit Injector (EUI) Controller

NOTE:For information on how the service code is displayed on the menu display unit, (See “Service Code Diagnostics - How Codes Are Displayed On Menu Display Unit” on page 98).

Code - Symptom	Problem	Solution
98.2 - Engine Oil Level Sensor Value Not	Broken wire or poor	Check front frame/engine harness(W7) and

Sensor Value Not Recognized.	connection.	cab main harness(W10).
98.3 - Oil Level Sensor Out Of Range High.	Engine oil level sensor (B3). Wire shorted to positive.	Check oil level sensor. Replace sensor. Check engine main harness (W8).
98.4 - Oil Level Sensor Out Of Range Low.	Engine oil level sensor (B3). Wire shorted to ground.	Check oil level sensor. Replace sensor. Check engine main harness (W8).

Code - Symptom	Problem	Solution
98.5 - Oil Level Sensor Open Circuit.	Engine oil level sensor (B3). Broken wire or poor connection.	Check oil level sensor. Replace sensor. Check engine main harness (W8).
100.2 - Engine Oil Pressure Sensor Value Not Recognized.	Broken wire or poor connection.	Check front frame/engine harness (W7) and Cab Main harness (W10).
100.3 - Engine Oil Pressure Sensor Out of Range High.	Engine oil pressure sensor (B5). Wire shorted to positive.	Check oil pressure sensor. Replace sensor. Check engine main harness (W8).
100.4 - Engine Oil Pressure Sensor Out of Range Low.	Engine oil pressure sensor (B5). Wire shorted to ground.	Check oil pressure sensor. Replace sensor. Check engine main harness (W8).
102.2 - Manifold Air Pressure (MAP) Sensor Value Not Recognized.	Broken wire or poor connection.	Check front frame/engine harness (W7) and Cab Main harness (W10).
102.3 - Manifold Air Pressure (MAP) Sensor out Of Range High.	Intake manifold air pressure/ temperature sensor (B6). Wire shorted to positive.	Check intake manifold air pressure/ temperature sensor. Replace sensor. Check engine main harness (W8).
102.4 - Manifold Air Pressure (MAP) Sensor out Of Range Low.	Intake manifold air pressure/ temperature sensor (B6). Wire shorted to ground.	Check intake manifold air pressure/ temperature sensor. Replace sensor. Check engine main harness (W8).

Service Code Diagnostics - Chassis Control Unit (CCU)

NOTE: For information on how the service code is displayed on the menu display unit, (See "Service Code Diagnostics - How Codes Are Displayed On Menu Display Unit" on page 98).

Code - Symptom	Problem	Solution
1702.3 - Bin Position Above Normal.	Bin position sensor (B17) not calibrated.	Calibrate bin position sensor. **(See menu function D04 in the MDU menu structure in CHAPTER 8 in the OMM)**.

	Wiring or connections.	Check rear frame harness (W15), hydraulic harness (W14) and cab main harness (W10).
	Bin position sensor (B17).	Check bin position sensor. **(See "Bin Position Sensor Test" on page 196)**.
	CCU (A8).	Replace CCU.

Code - Symptom	Problem	Solution
1702.3 - Bin Position Below Normal.	Bin position sensor (B17) not calibrated.	Calibrate bin position sensor. **(See menu function D04 in the MDU menu structure in CHAPTER 8 in the OMM)**.
	Wiring or connections.	Check rear frame harness (W15), hydraulic harness (W14) and cab main harness (W10).
	Bin position sensor (B17).	Check bin position sensor. **(See "Bin Position Sensor Test" on page 196)**.
	CCU (A8).	Replace CCU.
1703.3 - System Air Pressure Above Normal.	Wiring or connections.	Check cab main harness (W10).
	System air pressure sensor (B15).	Check system air pressure sensor. **(See "Pneumatic System Solenoids, Pressure Switches, and Sensor Tests" on page 192)**.
	CCU (A8).	Replace CCU.
1703.4 - System Air Pressure Below Normal.	Wiring or connections.	Check cab main harness (W10).
	System air pressure sensor (B15).	Check system air pressure sensor. **(See "Pneumatic System Solenoids, Pressure Switches, and Sensor Tests" on page 192)**.
	CCU (A8).	Replace CCU.
1704.3 - Hydraulic Temperature Above Normal.	Wiring or connections.	Check cab main harness (W10) and hydraulic harness (W14).
	Hydraulic temperature sensor (B21).	Check hydraulic temperature sensor. **(See "Hydraulic Temperature Sensors Test" on page 195).**
	CCU (A8).	Replace CCU.
1704.4 - Hydraulic Temperature Below Normal.	Wiring or connections.	Check cab main harness (W10) and hydraulic harness (W14).
	Hydraulic temperature sensor (B21).	Check hydraulic temperature sensor. **(See "Hydraulic Temperature Sensors Test" on page 195).**
	CCU (A8).	Replace CCU.
1705.3 - Wet Disk Brake Temperature	Wiring or connections.	Check cab main harness (W10) and hydraulic

Brake Temperature Above Normal. (B40D Only).	Wet disk brake temperature sensor (B22).	harness (W14). Check wet disk brake temperature sensor. **(See "Hydraulic Temperature Sensors Test" on page 195)**.
	CCU (A8).	Replace CCU.

Code - Symptom	Problem	Solution
1705.4 - Wet Disk Brake Temperature Below Normal. (B40D Only).	Wiring or connections.	Check cab main harness (W10) and hydraulic harness (W14).
	Wet disk brake temperature sensor (B22).	Check wet disk brake temperature sensor. **(See "Hydraulic Temperature Sensors Test" on page 195)**.
	CCU (A8).	Replace CCU.
96.3 - Engine Oil Pressure Sensor Out of Range High.	Wiring or connections.	Check front frame/engine harness (W7) and cab main harness (W10).
	Fuel level sensor (B19).	Check level sensor.
	CCU (A8).	Replace CCU.
96.4 - Engine Oil Pressure Sensor Out of Range Low.	Wiring or connections.	Check front frame/engine harness (W7) and cab main harness (W10).
	Fuel level sensor (B19).	Check level sensor.
	CCU (A8).	Replace CCU.
2000.2 - VIN Number Mismatch.	CCU (A8) has incorrect program.	Install correct program in CCU.

Service Code Diagnostics -Transmission Control Unit (TCU)

NOTE:For explanation of acronyms DNS, DNA NNC etc., (See "Service Code Diagnostics - How To Use Listing For Transmission Codes" on page 98).

Code - Symptom	Problem	Solution
1312 - TCU Input Voltage Low. DNS, DNA and SOL OFF conditions exists. Transmission Service Light **ON**.	Alternator. Batteries. Loose or corroded connections.	Check alternator. Replace if necessary. Check batteries. Recharge or replace as necessary. Check connections of wire harness (W6 and W9).
1313 - TCU Input Voltage Medium Low. DNA condition exists. Transmission Service Light **OFF**.	Alternator. Batteries. Loose or corroded connections.	Check alternator. Replace if necessary. Check batteries. Recharge or replace as necessary. Check connections of wire harness (W6 and W9).
1312 - TCU Input Voltage High. DNS and SOL OFF conditions exists. Transmission Service Light **ON**.	Alternator.	Check alternator. Replace if necessary.
1412 - Transmission Oil Level Sensor Circuit Malfunction Low. Transmission Fault Light **OFF**.	Oil level sensor. Wiring or connections. TCU (A5).	Replace oil level sensor. **(See Disassemble and Assemble Control Valve in CHAPTER 3, SECTION 3 in the Repair Manual)**. Check transmission control harness (W12) and transmission harness (W13). Replace TCU. **(See "Remove and Install Transmission Control Unit" on page 202)**.
2112 - Accelerator Pedal Position Sensor (B10) Circuit Malfunction - Low. TCU senses	Accelerator pedal position sensor (B10). Wiring or connections.	Check accelerator pedal position sensor. Replace. **(See "Remove, Install, and Calibrate Accelerator Pedal Position Sensor" on page 206)**. Check cab main harness (W10) and CAN

accelerator pedal position counts of 14 or less. Throttle default values are used, DNA. Transmission service light **OFF**.	TCU (A5).	data line harness (W11). Replace TCU. **(See "Remove and Install Transmission Control Unit" on page 202)**.

Code - Symptom	Problem	Solution
2123 - Accelerator Pedal Position Sensor (B10) Circuit Malfunction - High. TCU senses accelerator pedal position counts 233 - 255. Throttle default values are used, DNA. Transmission service light **OFF**.	Accelerator pedal position sensor (B10). Wiring or connections. TCU (A5).	Check accelerator pedal position sensor. Replace. **(See "Remove, Install, and Calibrate Accelerator Pedal Position Sensor" on page 206)**. Check cab main harness (W10) and CAN data line harness (W11). Replace TCU. **(See "Remove and Install Transmission Control Unit" on page 202)**.
2214 - Engine Speed Sensor Reasonableness Test. Default engine speeds are used, DNA. Transmission service light **OFF**.	Input speed sensor (B14). Wiring or connections. TCU (A5).	Check resistance of speed sensor. **(See "Transmission Speed Sensors Test" on page 199)**. Check transmission control harness (W12) and transmission harness (W13). Replace TCU. **(See "Remove and Install Transmission Control Unit" on page 202)**.

Code - Symptom	Problem	Solution
2215 - Turbine Speed Sensor Reasonableness Test. DNA, DNS Locked in Current Range. Transmission service light **ON**.	Input sensor (B12). **NOTE: A malfunctioning turbine speed sensor or a dragging C1 or C3 clutch is indicated, if turbine speed is less than 150 r.p.m.; when output speed is less than 100 r.p.m. and engine speed is more than 400 r.p.m.; when neutral (N) is selected. When this happens, the TCU will put the transmission in Neutral Very Low (NVL) mode. When in NVL mode, the D solenoid is energized in addition to the E solenoid to apply C4 and C5 clutches, which causes the transmission output to lock up.**	Check resistance of speed sensor. **(See "Transmission Speed Sensors Test" on page 199)**.
	Wiring or connections.	Check transmission control harness (W12) and transmission harness (W13).
	TCU (A5).	Replace TCU. **(See "Remove and Install Transmission Control Unit" on page 202)**.
2216 - Output Speed Sensor reasonableness Test. DNA, DNS Locked in	Output speed sensor (B13). Wiring or connections.	Replace speed sensor. Check transmission control harness (W12) and transmission harness (W13).

DNA, DNS Locked in Current Range. Transmission service light **ON**.	TCU (A5).	Replace TCU. **(See "Remove and Install Transmission Control Unit" on page 202)**.

Code - Symptom	Problem	Solution
2312 - Primary Shift Selector or RSI Link Open or Short Circuit. Holds in last valid displayed. Transmission Service light **OFF**.	Transmission shift control (A4). Wiring or connections. TCU (A5).	Replace shift control. Check transmission control harness (W12). Replace TCU **(See "Remove and Install Transmission Control Unit" on page 202)**.
2313 - Primary Shift Selector Mode Function Malfunction. Mode change not permitted. Transmission Service light **OFF**.	Transmission shift control (A4). Wiring or connections. TCU (A5).	Replace shift control. Check transmission control harness (W12). Replace TCU **(See "Remove and Install Transmission Control Unit" on page 202)**.
2316 - Shift Selector Display Line Open or Short Circuit. No inhibited operation. Cateye (-/-) may be displayed. Transmission Service light **OFF**.	Transmission shift control (A4). Wiring or connections. TCU (A5).	Replace shift control. Check transmission control harness (W12). Replace TCU **(See "Remove and Install Transmission Control Unit" on page 202)**.
2412 - Sump Fluid Temperature Cold. DNS locked in neutral. Transmission Service light **ON**.	Transmission oil too cold. Air temperature is below -32° C (-25° F). Transmission oil sump temperature sensor. Wiring or connections.	Warm transmission oil to normal operating temperature. **(See "TRANSMISSION WARM-UP PROCEDURE" on page 297)**. Replace temperature sensor. **(See Disassemble and Assemble Control Valve in CHAPTER 3, SECTION 3 in the Repair Manual)**. Check transmission control harness (W12) and transmission harness (W13).

Code - Symptom	Problem	Solution
2423 - Sump Fluid Temperature Hot. No upshifts above a calibration range. Transmission Service light **OFF**.	Transmission oil low.	Add oil as necessary. **(See CHAPTER 1 in the OMM for quantities and specifications)**.
	Transmission oil too hot because engine is overheating.	Check cause of engine overheating. **(See "SECTION 2. DIAGNOSE ENGINE MALFUNCTIONS" on page 45)**.
	Transmission thermal valve.	
	Transmission oil cooler is restricted.	Check oil cooler **(See "Transmission Oil Cooler Restriction Test" on page 305)**.
	Transmission oil sump temperature sensor.	Replace temperature sensor. **(See Disassemble and Assemble Control Valve in CHAPTER 3, SECTION 3 in the Repair Manual)**.
	Wiring or connections.	Check transmission control harness (W12) and transmission harness (W13).
2511 - Output Speed Sensor Detected Zero Speed (1at Range). DNA, DNS, Locked in current range (1st). Transmission service light **ON**. This code is locked to real time to protect the transmission in case a loss of power to the TCU (power interrupted code 3500) occurs.	Output speed sensor (B13). **NOTE: May also cause service code 2216 to occur.**	Check resistance of sped sensor **(See "Transmission Speed Sensors Test" on page 199)**.
	Turbine speed sensor (B12). **NOTE: May also cause service code 2215 to occur.**	Check resistance of sped sensor. **(See "Transmission Speed Sensors Test" on page 199)**.
	Wiring or connections.	Check transmission control harness (W12) and transmission harness (W13).
	Transmission internal clutch malfunction.	Repair or replace transmission. **(See Remove and Install Transmission In CHAPTER 3, SECTION 1 and Disassemble Transmission In CHAPTER 3, SECTION 3 in the Repair Manual)**.
2522 - Output Speed Sensor Detected Zero Speed (2nd Range). DNA, DNS, Locked in current range (2nd).	Output speed sensor (B13). **NOTE: May also cause service code 2216 to occur.**	Check resistance of sped sensor. **(See "Transmission Speed Sensors Test" on page 199)**.

Transmission service light **ON**. This code is locked to real time to protect the transmission in case a loss of power to the TCU (power interrupted code 3500) occurs.	Wiring or connections. Transmission internal clutch malfunction.	Check transmission control harness (W12) and transmission harness (W13). Repair or replace transmission. **(See Remove and Install Transmission In CHAPTER 3, SECTION 1 and Disassemble Transmission In CHAPTER 3, SECTION 3 in the Repair Manual)**.

Code - Symptom	Problem	Solution
2533 - Output Speed Sensor Detected Zero Speed (3rd Range). DNA, DNS, Locked in current range (3rd). Transmission service light **ON**. This code is locked to real time to protect the transmission in case a loss of power to the TCU (power interrupted code 3500) occurs.	Output speed sensor (B13). **NOTE: May also cause service code 2216 to occur.** Wiring or connections. Transmission internal clutch malfunction.	Check resistance of sped sensor. **(See "Transmission Speed Sensors Test" on page 199)**. Check transmission control harness (W12) and transmission harness (W13). Repair or replace transmission. **(See Remove and Install Transmission In CHAPTER 3, SECTION 1 and Disassemble Transmission In CHAPTER 3, SECTION 3 in the Repair Manual)**.
2544 - Output Speed Sensor Detected Zero Speed (4th Range). DNA, DNS, Locked in current range (4th). Transmission service light **ON**. This code is locked to real time to protect the transmission in case a loss of power to the TCU (power interrupted code 3500) occurs.	Output speed sensor (B13). **NOTE: May also cause service code 2216 to occur.** Wiring or connections. Transmission internal clutch malfunction.	Check resistance of sped sensor. **(See "Transmission Speed Sensors Test" on page 199)**. Check transmission control harness (W12) and transmission harness (W13). Repair or replace transmission. **(See Remove and Install Transmission In CHAPTER 3, SECTION 1 and Disassemble Transmission In CHAPTER 3, SECTION 3 in the Repair Manual)**.
2555 - Output Speed Sensor Detected Zero Speed (5th Range). DNA, DNS, Locked in current range (5th). Transmission service light **ON**. This code is locked to real time to protect the	Output speed sensor (B13). **NOTE: May also cause service code 2216 to occur.** Wiring or connections. Transmission internal clutch malfunction.	Check resistance of sped sensor. **(See "Transmission Speed Sensors Test" on page 199)**. Check transmission control harness (W12) and transmission harness (W13). Repair or replace transmission. **(See Remove and Install Transmission In**

transmission in case a loss of power to the TCU (power interrupted code 3500) occurs.		**CHAPTER 3, SECTION 1 and Disassemble Transmission In CHAPTER 3, SECTION 3 in the Repair Manual)**.

Code - Symptom	Problem	Solution
2566 - Output Speed Sensor Detected Zero Speed (6th Range). DNA, DNS, Locked in current range (6th). Transmission service light **ON**. This code is locked to real time to protect the transmission in case a loss of power to the TCU (power interrupted code 3500) occurs.	Output speed sensor (B13). **NOTE: May also cause service code 2216 to occur.** Wiring or connections. Transmission internal clutch malfunction.	Check resistance of sped sensor. **(See "Transmission Speed Sensors Test" on page 199)**. Check transmission control harness (W12) and transmission harness (W13). Repair or replace transmission. **(See Remove and Install Transmission In CHAPTER 3, SECTION 1 and Disassemble Transmission In CHAPTER 3, SECTION 3 in the Repair Manual)**.
2577 - Output Speed Sensor Detected Zero Speed (Reverse). DNA, DNS, Locked in current range (Reverse). Transmission service light **ON**. This code is locked to real time to protect the transmission in case a loss of power to the TCU (power interrupted code 3500) occurs.	Output speed sensor (B13). **NOTE: May also cause service code 2216 to occur.** Wiring or connections. Transmission internal clutch malfunction.	Check resistance of sped sensor. **(See "Transmission Speed Sensors Test" on page 199)**. Check transmission control harness (W12) and transmission harness (W13). Repair or replace transmission. **(See Remove and Install Transmission In CHAPTER 3, SECTION 1 and Disassemble Transmission In CHAPTER 3, SECTION 3 in the Repair Manual)**.
2600 - Throttle Source Not Detected. Throttle default values are used, DNA. Transmission service light **OFF**.	Wiring or connections. Accelerator pedal position sensor (B10). ECU (A3).	Check CAN harness (W11) and cab main harness (W10). Replace accelerator pedal position sensor. Calibrate accelerator pedal position sensor to ECU, if necessary. **(See "Remove and Install Engine Control Unit" on page 200)**. Replace ECU. Calibrate accelerator pedal position sensor to ECU, if necessary. **(See "Remove and Install Engine Control Unit"**

		"Remove and Install Engine Control Unit on page 200).
2611 - Engine Coolant Source Not Detected. Default temperature value of -18° C (0° F) used. Transmission service light **OFF**.	Engine coolant temperature sensor (B2). Wiring or connections.	Replace sensor. Check engine main harness (W8), front frame/engine harness (W7) and cab main harness (W10).

Code - Symptom	Problem	Solution
3233 - C3 Pressure Switch Open (3rd Range). DNA, DNS, locked in current range (3rd). Transmission service light **ON**.	Wiring or connections. Transmission (C3) pressure switch or internal wire harness. TCU (A5).	Check transmission control harness (W12) and transmission harness (W13). Replace (C3) pressure switch or internal wire harness. **(See Disassemble and Assemble Control Valve in CHAPTER 3, SECTION 3 in the Repair Manual)**. Replace TCU. **(See "Remove and Install Transmission Control Unit" on page 202)**.
3255 - C3 Pressure Switch Open (5th Range). DNA, DNS, locked in current range (5th). Transmission service light **ON**.	Wiring or connections. Transmission (C3) pressure switch or internal wire harness. TCU (A5).	Check transmission control harness (W12) and transmission harness (W13). Replace (C3) pressure switch or internal wire harness. **(See Disassemble and Assemble Control Valve in CHAPTER 3, SECTION 3 in the Repair Manual)**. Replace TCU. **(See "Remove and Install Transmission Control Unit" on page 202)**.
2577 - C3 Pressure Switch Open (Reverse). DNA, DNS, Locked in current range (Reverse). Transmission service light **ON**.	Wiring or connections. Transmission (C3) pressure switch or internal wire harness. TCU (A5).	Check transmission control harness (W12) and transmission harness (W13). Replace (C3) pressure switch or internal wire harness. **(See Disassemble and Assemble Control Valve in CHAPTER 3, SECTION 3 in the Repair Manual)**. Replace TCU. **(See "Remove and Install Transmission Control Unit" on page 202)**.
3312 - Sump Oil Temperature Sensor Circuit Malfunction Low. Default value 93° C (200° F) used. Transmission service light **OFF**.	Wiring or connections. Transmission oil temperature sensor or internal wire harness. TCU (A5).	Check transmission control harness (W12) and transmission harness (W13). Replace sensor or internal harness.(**See Disassembly and Assemble Control Valve in CHAPTER 3, SECTION 3 in the Repair Manual).** Replace TCU. **(See "Remove and Install Transmission Control Unit" on page 202)**.
3323 - Sump Oil Temperature Sensor Circuit Malfunction High.	Wiring or connections. Transmission oil temperature	Check transmission control harness (W12) and transmission harness (W13). Replace sensor or internal harness.(**See**

Default value 93° C (200° F) used. Transmission service light **OFF**.	sensor or internal wire harness. TCU (A5).	**Disassembly and Assemble Control Valve in CHAPTER 3, SECTION 3 in the Repair Manual).** Replace TCU. **(See "Remove and Install Transmission Control Unit" on page 202).**

Code - Symptom	Problem	Solution
3412 - Factory Calibration Compatibility Number Wrong. DNS, DNA and SOL OFF (hydraulic default) condition exists. Transmission Service light **ON**.	TCU (A5) re-quires re-calibration. TCU (A5).	Download the factory calibration data to the TCU. **NOTE: Copying the current calibration data from the TCU and then reloading it will not correct the malfunction. The calibration data must be downloaded directly from the software installation program.** Replace TCU. **(See "Remove and Install Transmission Control Unit" on page 202).**
3413 - Factory Calibration Block Check Sum. DNS, DNA and SOL OFF (hydraulic default) condition exists. Transmission Service light **ON**.	TCU (A5) re-quires re-calibration. TCU (A5).	Download the factory calibration data to the TCU. **NOTE: Copying the current calibration data from the TCU and then reloading it will not correct the malfunction. The calibration data must be downloaded directly from the software installation program. Make sure calibration and software versions are compatible.** Replace TCU. **(See "Remove and Install Transmission Control Unit" on page 202).**
3414 - Power Off Block Check Sum. DNS condition exists. Transmission Service light **OFF**.	No power to TCU. Power interrupt service code 3500 occurs. TCU (A5).	Check fuses and wire harness. Replace TCU. **(See "Remove and Install Transmission Control Unit" on page 202).**
3415 - Diagnostic Queue Block Check Sum. DNS condition exists. Transmission Service light **OFF**.	TCU diagnostic queue. TCU (A5).	Clear diagnostic queue. Replace TCU. **(See "Remove and Install Transmission Control Unit" on page 202).**

Code - Symptom	Problem	Solution
3416 - Real Time Block Check Sum. DNS, DNA and SOL OFF (hydraulic default) condition exists. Transmission Service light **ON**.	Re-calibrate TCU. TCU (A5).	Download the factory calibration data to the TCU. **NOTE: Copying the current calibration data from the TCU and then reloading it will not correct the malfunction. The calibration data must be downloaded directly from the software installation program. Make sure calibration and software versions are compatible.** Replace TCU. **(See "Remove and Install Transmission Control Unit" on page 202)**.
3417 - Customer Modifiable Constants Check Sum. DNS, DNA and SOL OFF (hydraulic default) condition exists. Transmission Service light **ON**.	Re-calibrate TCU. TCU (A5).	Download the factory calibration data to the TCU. Reprogram the GPI/GPO package after re-calibrating the TCU. **NOTE: Copying the current calibration data from the TCU and then reloading it will not correct the malfunction. The calibration data must be downloaded directly from the software installation program. Make sure calibration and software versions are compatible.** Replace TCU. **(See "Remove and Install Transmission Control Unit" on page 202)**.
3500 - Power Interruption (Code Set After Power Restored). SOL OFF (Hydraulic default) condition exists during interruption. Transmission Service light **OFF**.	Battery disconnect switch turned to the **OFF** position before turning the key switch **OFF.** Wiring or connections. TCU (A5).	Always turn key switch **OFF** first before turning battery disconnect switch **OFF**. Check cab main harness (W10) and transmission harness (W12). Replace TCU. **(See "Remove and Install Transmission Control Unit" on page 202)**.

3516 - Real Time Write Interruption. DNS, DNA and SOL OFF (hydraulic default) conditions exists. Transmission service light **ON**.	Battery disconnect switch turned to OFF position before TCU shutdown is complete. Wiring or connections. TCU (A5).	Allow a few seconds for TCU shutdown to complete before turning battery disconnect switch to OFF position. Check cab main harness (W10) and transmission control harness (W12). Replace TCU. **(See "Remove and Install Transmission Control Unit" on page 202)**.

Code - Symptom	Problem	Solution
3600 - Hardware/ Software Not Compatible. DNS, DNA and SOL OFF (hydraulic default) conditions exists. Transmission service light **ON**.	Mismatch between TCU hardware and TCU software.	Install correct software for hardware used. **NOTE: Re-calibration of TCU may be necessary. Make sure calibration and software versions are comPatible.**
4212 - Short to Battery (A Solenoid Circuit). DNS, DNA and SOL OFF (hydraulic default) conditions exists. Transmission service light **ON**. Neutral Start Is Disabled. A malfunction TCU is usually indicated if multiple service codes (e.g., 4212, 4213, 4214, etc.) occur when wiring and solenoids are okay.	Wiring or connections. Transmission internal wiring or malfunctioning solenoid. TCU (A5).	Check transmission control harness (W12) and transmission harness (W13). Check the solenoid. **(See "Transmission Solenoids Test" on page 199)**. Replace transmission harness or solenoid. **(See Disassemble and Assemble Control Valve in CHAPTER 3, SECTION 3 in the Rapier Manual)**. Replace TCU. **(See "Remove and Install Transmission Control Unit" on page 202)**.
4213 - Short to Battery (B Solenoid Circuit). DNS, DNA and SOL OFF (hydraulic default) conditions exists. Transmission service light **ON**. Neutral Start Is Disabled.	Wiring or connections. Transmission internal wiring or malfunctioning solenoid. TCU (A5).	Check transmission control harness (W12) and transmission harness (W13). Check the solenoid. **(See "Transmission Solenoids Test" on page 199)**. Replace transmission harness or solenoid. **(See Disassemble and Assemble Control Valve in CHAPTER 3, SECTION 3 in the Rapier Manual)**. Replace TCU. **(See "Remove and Install Transmission Control Unit" on page 202)**.

A malfunction TCU is usually indicated if multiple service codes (e.g., 4212, 4213, 4214, etc.) occur when wiring and solenoids are okay.		

Code - Symptom	Problem	Solution
4214 - Short To Battery (C Solenoid Circuit). DNS, DNA and SOL OFF (hydraulic default) conditions exists. Transmission service light **ON**. Neutral Start Is Disabled. A malfunction TCU is usually indicated if multiple service codes (e.g., 4212, 4213, 4214, etc.) occur when wiring and solenoids are okay.	Wiring or connections. Transmission internal wiring or malfunctioning solenoid. TCU (A5).	Check transmission control harness (W12) and transmission harness (W13). Check the solenoid. **(See "Transmission Solenoids Test" on page 199)**. Replace transmission harness or solenoid. **(See Disassemble and Assemble Control Valve in CHAPTER 3, SECTION 3 in the Rapier Manual)**. Replace TCU. **(See "Remove and Install Transmission Control Unit" on page 202)**.
4215 - Short To Battery (D Solenoid Circuit). DNS, DNA and SOL OFF (hydraulic default) conditions exists. Transmission service light **ON**. Neutral Start Is Disabled. A malfunction TCU is usually indicated if multiple service codes (e.g., 4212, 4213, 4214, etc.) occur when wiring and solenoids are okay.	Wiring or connections. Transmission internal wiring or malfunctioning solenoid. TCU (A5).	Check transmission control harness (W12) and transmission harness (W13). Check the solenoid. **(See "Transmission Solenoids Test" on page 199)**. Replace transmission harness or solenoid. **(See Disassemble and Assemble Control Valve in CHAPTER 3, SECTION 3 in the Rapier Manual)**. Replace TCU. **(See "Remove and Install Transmission Control Unit" on page 202)**.

Code - Symptom	Problem	Solution
4216 - Short To Battery (E Solenoid Circuit). DNS, DNA and SOL OFF (hydraulic default) conditions exists. Transmission service light **ON**. Neutral Start Is Disabled. A malfunction TCU is usually indicated if multiple service codes (e.g., 4212, 4213, 4214, etc.) occur when wiring and solenoids are okay.	Wiring or connections. Transmission internal wiring or malfunctioning solenoid. TCU (A5).	Check transmission control harness (W12) and transmission harness (W13). Check the solenoid. **(See "Transmission Solenoids Test" on page 199)**. Replace transmission harness or solenoid. **(See Disassemble and Assemble Control Valve in CHAPTER 3, SECTION 3 in the Rapier Manual)**. Replace TCU. **(See "Remove and Install Transmission Control Unit" on page 202)**.
4221 - Short To Battery (F Solenoid Circuit). DNA and Lockup inhibited conditions exists. Transmission service light **OFF**. A malfunction TCU is usually indicated if multiple service codes (e.g., 4212, 4213, 4214, etc.) occur when wiring and solenoids are okay.	Wiring or connections. Transmission internal wiring or malfunctioning solenoid. TCU (A5).	Check transmission control harness (W12) and transmission harness (W13). Check the solenoid. **(See "Transmission Solenoids Test" on page 199)**. Replace transmission harness or solenoid. **(See Disassemble and Assemble Control Valve in CHAPTER 3, SECTION 3 in the Rapier Manual)**. Replace TCU. **(See "Remove and Install Transmission Control Unit" on page 202)**.

Code - Symptom	Problem	Solution
4222 - Short To Battery (G Solenoid Circuit). DNS, DNA and SOL OFF (hydraulic default) conditions exists. Transmission service light **ON**. Neutral Start Is Disabled. A malfunction TCU is usually indicated if multiple service codes (e.g., 4212, 4213, 4214, etc.) occur when wiring and solenoids are okay.	Wiring or connections. Transmission internal wiring or malfunctioning solenoid. TCU (A5).	Check transmission control harness (W12) and transmission harness (W13). Check the solenoid. **(See "Transmission Solenoids Test" on page 199)**. Replace transmission harness or solenoid. **(See Disassemble and Assemble Control Valve in CHAPTER 3, SECTION 3 in the Rapier Manual)**. Replace TCU. **(See "Remove and Install Transmission Control Unit" on page 202)**.
4223 - Short To Battery (H Solenoid Circuit). Retarder inhibited. Transmission service light **OFF**. A malfunction TCU is usually indicated if multiple service codes (e.g., 4212, 4213, 4214, etc.) occur when wiring and solenoids are okay.	Wiring or connections. Transmission internal wiring or malfunctioning solenoid. TCU (A5).	Check transmission control harness (W12) and transmission harness (W13). Check the solenoid. **(See "Transmission Solenoids Test" on page 199)**. Replace transmission harness or solenoid. **(See Disassemble and Assemble Control Valve in CHAPTER 3, SECTION 3 in the Rapier Manual)**. Replace TCU. **(See "Remove and Install Transmission Control Unit" on page 202)**.

Code - Symptom	Problem	Solution
4412 - Short To Ground (A Solenoid Circuit). DNS, DNA and SOL OFF (hydraulic default) conditions exists. Transmission service light **ON**. Neutral Start Is Disabled. A malfunction TCU is usually indicated if multiple service codes (e.g., 4412, 4413, 4414, etc.) occur when wiring and solenoids are okay.	Wiring or connections. Transmission internal wiring or malfunctioning solenoid. TCU (A5).	Check transmission control harness (W12) and transmission harness (W13). Check the solenoid. **(See "Transmission Solenoids Test" on page 199)**. Replace transmission harness or solenoid. **(See Disassemble and Assemble Control Valve in CHAPTER 3, SECTION 3 in the Rapier Manual)**. Replace TCU. **(See "Remove and Install Transmission Control Unit" on page 202)**.
4413 - Short To Ground (B Solenoid Circuit). DNS, DNA and SOL OFF (hydraulic default) conditions exists. Transmission service light **ON**. Neutral Start Is Disabled. A malfunction TCU is usually indicated if multiple service codes (e.g., 4412, 4413, 4414, etc.) occur when wiring and solenoids are okay.	Wiring or connections. Transmission internal wiring or malfunctioning solenoid. TCU (A5).	Check transmission control harness (W12) and transmission harness (W13). Check the solenoid. **(See "Transmission Solenoids Test" on page 199)**. Replace transmission harness or solenoid. **(See Disassemble and Assemble Control Valve in CHAPTER 3, SECTION 3 in the Rapier Manual)**. Replace TCU. **(See "Remove and Install Transmission Control Unit" on page 202)**.

Code - Symptom	Problem	Solution
4414 - Short To Ground (C Solenoid Circuit). DNS, DNA and SOL OFF (hydraulic default) conditions exists. Transmission service light **ON**. Neutral Start Is Disabled. A malfunction TCU is usually indicated if multiple service codes (e.g., 4412, 4413, 4414, etc.) occur when wiring and solenoids are okay.	Wiring or connections. Transmission internal wiring or malfunctioning solenoid. TCU (A5).	Check transmission control harness (W12) and transmission harness (W13). Check the solenoid. **(See "Transmission Solenoids Test" on page 199)**. Replace transmission harness or solenoid. **(See Disassemble and Assemble Control Valve in CHAPTER 3, SECTION 3 in the Rapier Manual)**. Replace TCU. **(See "Remove and Install Transmission Control Unit" on page 202)**.
4415 - Short To Ground (D Solenoid Circuit). DNS, DNA and SOL OFF (hydraulic default) conditions exists. Transmission service light **ON**. Neutral Start Is Disabled. A malfunction TCU is usually indicated if multiple service codes (e.g., 4412, 4413, 4414, etc.) occur when wiring and solenoids are okay.	Wiring or connections. Transmission internal wiring or malfunctioning solenoid. TCU (A5).	Check transmission control harness (W12) and transmission harness (W13). Check the solenoid. **(See "Transmission Solenoids Test" on page 199)**. Replace transmission harness or solenoid. **(See Disassemble and Assemble Control Valve in CHAPTER 3, SECTION 3 in the Rapier Manual)**. Replace TCU. **(See "Remove and Install Transmission Control Unit" on page 202)**.
4416 - Short To Ground (E Solenoid	Wiring or connections.	Check transmission control harness (W12)

Ground (F Solenoid Circuit). DNS, DNA and SOL OFF (hydraulic default) conditions exists. Transmission service light **ON**. Neutral Start Is Disabled.	Transmission internal wiring or malfunctioning solenoid. TCU (A5).	and transmission harness (W13). Check the solenoid. **(See "Transmission Solenoids Test" on page 199)**. Replace transmission harness or solenoid. **(See Disassemble and Assemble Control Valve in CHAPTER 3, SECTION 3 in the Rapier Manual)**. Replace TCU. **(See "Remove and Install Transmission Control Unit" on page 202)**.

Code - Symptom	Problem	Solution
4421 - Short To Ground (F Solenoid Circuit). DNA and lockup inhibited conditions exists. Transmission service light **OFF**.	Wiring or connections. Transmission internal wiring or malfunctioning solenoid. TCU (A5).	Check transmission control harness (W12) and transmission harness (W13). Check the solenoid. **(See "Transmission Solenoids Test" on page 199)**. Replace transmission harness or solenoid. **(See Disassemble and Assemble Control Valve in CHAPTER 3, SECTION 3 in the Rapier Manual)**. Replace TCU. **(See "Remove and Install Transmission Control Unit" on page 202)**.
4422 - Short To Ground (G Solenoid Circuit). DNS, DNA and SOL OFF (hydraulic default) conditions exists. Transmission service light **ON**. Neutral Start Is Disabled.	Wiring or connections. Transmission internal wiring or malfunctioning solenoid. TCU (A5).	Check transmission control harness (W12) and transmission harness (W13). Check the solenoid. **(See "Transmission Solenoids Test" on page 199)**. Replace transmission harness or solenoid. **(See Disassemble and Assemble Control Valve in CHAPTER 3, SECTION 3 in the Rapier Manual)**. Replace TCU. **(See "Remove and Install Transmission Control Unit" on page 202)**.
4423 - Short To Ground (H Solenoid Circuit). Retarder operation inhibited. Transmission service light **OFF**.	Wiring or connections. Transmission internal wiring or malfunctioning solenoid. TCU (A5).	Check transmission control harness (W12) and transmission harness (W13). Check the solenoid. **(See "Transmission Solenoids Test" on page 199)**. Replace transmission harness or solenoid. **(See Disassemble and Assemble Control Valve in CHAPTER 3, SECTION 3 in the Rapier Manual)**. Replace TCU. **(See "Remove and Install Transmission Control Unit" on page 202)**.

Code - Symptom	Problem	Solution
4512 - Open Circuit (A Solenoid Circuit). DNS, DNA and SOL OFF (hydraulic default) conditions exists. Transmission service light **ON**.	Wiring or connections. Transmission internal wiring or malfunctioning solenoid.	Check transmission control harness (W12) and transmission harness (W13). Check the solenoid. **(See "Transmission Solenoids Test" on page 199)**. Replace transmission harness or solenoid. **(See Disassemble and Assemble Control Valve in CHAPTER 3, SECTION 3 in the Rapier Manual)**.
A malfunction TCU is usually indicated if multiple service codes (e.g., 4512, 4513, 4514, etc.) occur when wiring and solenoids are okay.	TCU (A5).	Replace TCU. **(See "Remove and Install Transmission Control Unit" on page 202)**.
4513 - Open Circuit (B Solenoid Circuit). DNS, DNA and SOL OFF (hydraulic default) conditions exists. Transmission service light **ON**.	Wiring or connections. Transmission internal wiring or malfunctioning solenoid.	Check transmission control harness (W12) and transmission harness (W13). Check the solenoid. **(See "Transmission Solenoids Test" on page 199)**. Replace transmission harness or solenoid. **(See Disassemble and Assemble Control Valve in CHAPTER 3, SECTION 3 in the Rapier Manual)**.
A malfunction TCU is usually indicated if multiple service codes (e.g., 4512, 4513, 4514, etc.) occur when wiring and solenoids are okay.	TCU (A5).	Replace TCU. **(See "Remove and Install Transmission Control Unit" on page 202)**.
4514 - Open Circuit (C Solenoid Circuit). DNS, DNA and SOL OFF (hydraulic default) conditions exists. Transmission service light **ON**.	Wiring or connections. Transmission internal wiring or malfunctioning solenoid.	Check transmission control harness (W12) and transmission harness (W13). Check the solenoid. **(See "Transmission Solenoids Test" on page 199)**. Replace transmission harness or solenoid. **(See Disassemble and Assemble Control Valve in CHAPTER 3, SECTION 3 in the Rapier Manual)**.

light **ON**.		**Rapier Manual)**.
A malfunction TCU is usually indicated if multiple service codes (e.g., 4512, 4513, 4514, etc.) occur when wiring and solenoids are okay.	TCU (A5).	Replace TCU. **(See "Remove and Install Transmission Control Unit" on page 202)**.

Code - Symptom	Problem	Solution
4515 - Open Circuit (D Solenoid Circuit).	Wiring or connections.	Check transmission control harness (W12) and transmission harness (W13).
DNS, DNA and SOL OFF (hydraulic default) conditions exists. Transmission service light **ON**.	Transmission internal wiring or malfunctioning solenoid.	Check the solenoid. **(See "Transmission Solenoids Test" on page 199)**. Replace transmission harness or solenoid. **(See Disassemble and Assemble Control Valve in CHAPTER 3, SECTION 3 in the Rapier Manual)**.
A malfunction TCU is usually indicated if multiple service codes (e.g., 4512, 4513, 4514, etc.) occur when wiring and solenoids are okay.	TCU (A5).	Replace TCU. **(See "Remove and Install Transmission Control Unit" on page 202)**.
4516 - Open Circuit (E Solenoid Circuit).	Wiring or connections.	Check transmission control harness (W12) and transmission harness (W13).
DNS, DNA and SOL OFF (hydraulic default) conditions exists. Transmission service light **ON**.	Transmission internal wiring or malfunctioning solenoid.	Check the solenoid. **(See "Transmission Solenoids Test" on page 199)**. Replace transmission harness or solenoid. **(See Disassemble and Assemble Control Valve in CHAPTER 3, SECTION 3 in the Rapier Manual)**.
A malfunction TCU is usually indicated if multiple service codes (e.g., 4512, 4513, 4514, etc.) occur when wiring and solenoids are okay.	TCU (A5).	Replace TCU. **(See "Remove and Install Transmission Control Unit" on page 202)**.
4521 - Open Circuit (F Solenoid Circuit).	Wiring or connections.	Check transmission control harness (W12) and transmission harness (W13).
DNA and lockup inhibited conditions exists. Transmission service light **OFF**.	Transmission internal wiring or malfunctioning solenoid.	Check the solenoid. **(See "Transmission Solenoids Test" on page 199)**. Replace transmission harness or solenoid. **(See Disassemble and Assemble Control Valve in CHAPTER 3, SECTION 3 in the Rapier Manual)**.

A malfunction TCU is usually indicated if multiple service codes (e.g., 4512, 4513, 4514, etc.) occur when wiring and solenoids are okay.	TCU (A5).	Replace TCU. **(See "Remove and Install Transmission Control Unit" on page 202)**.

Code - Symptom	Problem	Solution
4522 - Open Circuit (G Solenoid Circuit). DNS, DNA and SOL OFF (hydraulic default) conditions exists. Transmission service light **ON**.	Wiring or connections. Transmission internal wiring or malfunctioning solenoid.	Check transmission control harness (W12) and transmission harness (W13). Check the solenoid. **(See "Transmission Solenoids Test" on page 199)**. Replace transmission harness or solenoid. **(See Disassemble and Assemble Control Valve in CHAPTER 3, SECTION 3 in the Rapier Manual)**.
A malfunction TCU is usually indicated if multiple service codes (e.g., 4512, 4513, 4514, etc.) occur when wiring and solenoids are okay.	TCU (A5).	Replace TCU. **(See "Remove and Install Transmission Control Unit" on page 202)**.
4523 - Open Circuit (H Solenoid Circuit). Retarder inhibited. Transmission service light **OFF**. A malfunction TCU is usually indicated if multiple service codes (e.g., 4512, 4513, 4514, etc.) occur when wiring and solenoids are okay.	Wiring or connections. Transmission internal wiring or malfunctioning solenoid. TCU (A5).	Check transmission control harness (W12) and transmission harness (W13). Check the solenoid. **(See "Transmission Solenoids Test" on page 199)**. Replace transmission harness or solenoid. **(See Disassemble and Assemble Control Valve in CHAPTER 3, SECTION 3 in the Rapier Manual)**. Replace TCU. **(See "Remove and Install Transmission Control Unit" on page 202)**.
4621 - Over Current (F Solenoid High Circuit). DNA and Lockup inhibited conditions exists. Transmission service light **OFF**.	Wiring or connections. Transmission internal wiring or malfunctioning solenoid. TCU (A5).	Check transmission control harness (W12) and transmission harness (W13). Check the solenoid. **(See "Transmission Solenoids Test" on page 199)**. Replace transmission harness or solenoid. **(See Disassemble and Assemble Control Valve in CHAPTER 3, SECTION 3 in the Rapier Manual)**. Replace TCU. **(See "Remove and Install Transmission Control Unit" on page 202)**.

Code - Symptom	Problem	Solution
4626 - Over Current (H Solenoid High Circuit). DNA, low and 1st or retarder inhibited conditions exists. Transmission service light **OFF**.	Wiring or connections. Transmission internal wiring or malfunctioning solenoid. TCU (A5).	Check transmission control harness (W12) and transmission harness (W13). Check the solenoid. **(See "Transmission Solenoids Test" on page 199)**. Replace transmission harness or solenoid. **(See Disassemble and Assemble Control Valve in CHAPTER 3, SECTION 3 in the Rapier Manual)**. Replace TCU. **(See "Remove and Install Transmission Control Unit" on page 202)**.
4627 - Over Current (A Solenoid High Circuit). DNS,DNA and SOL OFF (hydraulic fault) conditions exists. Transmission service light **ON**.	Wiring or connections. Transmission internal wiring or malfunctioning solenoid. TCU (A5).	Check transmission control harness (W12) and transmission harness (W13). Check the solenoid. **(See "Transmission Solenoids Test" on page 199)**. Replace transmission harness or solenoid. **(See Disassemble and Assemble Control Valve in CHAPTER 3, SECTION 3 in the Rapier Manual)**. Replace TCU. **(See "Remove and Install Transmission Control Unit" on page 202)**.
5112 - Ofgoing Ratio Test During 1 to 2 Upshift. DNS, DNA and RPR conditions exists. Transmission service light **ON**.	Incorrect transmission oil level. Wiring or connections. Turbine speed sensor (B12). Output speed sensor (B13). Transmission internal wiring or malfunctioning solenoid.	Add or drain oil to obtain correct level. Check transmission control harness (W12) and transmission harness (W13). Check resistance of speed sensor. **(See "Transmission Speed Sensors Test" on page 199)**. Check resistance of speed sensor. **(See "Transmission Speed Sensors Test" on page 199)**. Check the solenoid. **(See "Transmission Solenoids Test" on page 199)**. Replace transmission harness or solenoid. **(See Disassemble and Assemble Control Valve in CHAPTER 3, SECTION 3 in the Rapier Manual)**.

		Rapier Manual).
	TCU (A5).	Replace TCU. **(See "Remove and Install Transmission Control Unit" on page 202)**.

Code - Symptom	Problem	Solution
5121 - Ofgoing Ratio Test During 2 to 1 Downshift. DNS, DNA and RPR conditions exists. Transmission service light **ON**.	Incorrect transmission oil level.	Add or drain oil to obtain correct level.
	Wiring or connections.	Check transmission control harness (W12) and transmission harness (W13).
	Turbine speed sensor (B12).	Check resistance of speed sensor. **(See "Transmission Speed Sensors Test" on page 199)**.
	Output speed sensor (B13).	Check resistance of speed sensor. **(See "Transmission Speed Sensors Test" on page 199)**.
	Transmission internal wiring or malfunctioning solenoid.	Check the solenoid. **(See "Transmission Solenoids Test" on page 199)**. Replace transmission harness or solenoid. **(See Disassemble and Assemble Control Valve in CHAPTER 3, SECTION 3 in the Rapier Manual)**.
	TCU (A5).	Replace TCU. **(See "Remove and Install Transmission Control Unit" on page 202)**.
5123 - Ofgoing Ratio Test During 2 to 3 Upshift. DNS, DNA and RPR conditions exists. Transmission service light **ON**.	Incorrect transmission oil level.	Add or drain oil to obtain correct level.
	Wiring or connections.	Check transmission control harness (W12) and transmission harness (W13).
	Turbine speed sensor (B12).	Check resistance of speed sensor. **(See "Transmission Speed Sensors Test" on page 199)**.
	Output speed sensor (B13).	Check resistance of speed sensor. **(See "Transmission Speed Sensors Test" on page 199)**.
	Transmission internal wiring or malfunctioning solenoid.	Check the solenoid. **(See "Transmission Solenoids Test" on page 199)**. Replace transmission harness or solenoid. **(See Disassemble and Assemble Control Valve in CHAPTER 3, SECTION 3 in the Rapier Manual)**.
	TCU (A5).	Replace TCU. **(See "Remove and Install Transmission Control Unit" on page 202)**.

		Transmission Control Unit" on page 202).

Code - Symptom	Problem	Solution
5124 - Ofgoing Ratio Test During 2 to 4 Upshift. DNS, DNA and RPR conditions exists. Transmission service light **ON**.	Incorrect transmission oil level.	Add or drain oil to obtain correct level.
	Wiring or connections.	Check transmission control harness (W12) and transmission harness (W13).
	Turbine speed sensor (B12).	Check resistance of speed sensor. **(See "Transmission Speed Sensors Test" on page 199)**.
	Output speed sensor (B13).	Check resistance of speed sensor. **(See "Transmission Speed Sensors Test" on page 199)**.
	Transmission internal wiring or malfunctioning solenoid.	Check the solenoid. **(See "Transmission Solenoids Test" on page 199)**. Replace transmission harness or solenoid. **(See Disassemble and Assemble Control Valve in CHAPTER 3, SECTION 3 in the Rapier Manual)**.
	TCU (A5).	Replace TCU. **(See "Remove and Install Transmission Control Unit" on page 202)**.
5135 - Ofgoing Ratio Test During 3 to 5 Upshift. DNS, DNA and RPR conditions exists. Transmission service light **ON**.	Incorrect transmission oil level.	Add or drain oil to obtain correct level.
	Wiring or connections.	Check transmission control harness (W12) and transmission harness (W13).
	Turbine speed sensor (B12).	Check resistance of speed sensor. **(See "Transmission Speed Sensors Test" on page 199)**.
	Output speed sensor (B13).	Check resistance of speed sensor. **(See "Transmission Speed Sensors Test" on page 199)**.
	Transmission internal wiring or malfunctioning solenoid.	Check the solenoid. **(See "Transmission Solenoids Test" on page 199)**. Replace transmission harness or solenoid. **(See Disassemble and Assemble Control Valve in CHAPTER 3, SECTION 3 in the Rapier Manual)**.
	TCU (A5).	Replace TCU. **(See "Remove and Install Transmission Control Unit" on page 202)**.

		Transmission Control Unit" on page 202).

Code - Symptom	Problem	Solution
5142 - Ofgoing Ratio Test During 4 to 2 Downshift. DNS, DNA and RPR conditions exists. Transmission service light **ON**.	Incorrect transmission oil level.	Add or drain oil to obtain correct level.
	Wiring or connections.	Check transmission control harness (W12) and transmission harness (W13).
	Turbine speed sensor (B12).	Check resistance of speed sensor. **(See "Transmission Speed Sensors Test" on page 199)**.
	Output speed sensor (B13).	Check resistance of speed sensor. **(See "Transmission Speed Sensors Test" on page 199)**.
	Transmission internal wiring or malfunctioning solenoid.	Check the solenoid. **(See "Transmission Solenoids Test" on page 199)**. Replace transmission harness or solenoid. **(See Disassemble and Assemble Control Valve in CHAPTER 3, SECTION 3 in the Rapier Manual)**.
	TCU (A5).	Replace TCU. **(See "Remove and Install Transmission Control Unit" on page 202)**.
5143 - Ofgoing Ratio Test During 4 to 3 Downshift. DNS, DNA and RPR conditions exists. Transmission service light **ON**. This code is logged to real time to protect the transmission in case a loss of power to the TCU (power interruption code 3500) occurs.	Incorrect transmission oil level.	Add or drain oil to obtain correct level.
	Wiring or connections.	Check transmission control harness (W12) and transmission harness (W13).
	Turbine speed sensor (B12).	Check resistance of speed sensor. **(See "Transmission Speed Sensors Test" on page 199)**.
	Output speed sensor (B13).	Check resistance of speed sensor. **(See "Transmission Speed Sensors Test" on page 199)**.
	Transmission internal wiring or malfunctioning solenoid.	Check the solenoid. **(See "Transmission Solenoids Test" on page 199)**. Replace transmission harness or solenoid. **(See Disassemble and Assemble Control Valve in CHAPTER 3, SECTION 3 in the Rapier Manual)**.
	TCU (A5).	Replace TCU. **(See "Remove and Install Transmission Control Unit" on page 202)**.

		Transmission Control Unit" on page 202).

Code - Symptom	Problem	Solution
5145 - Ofgoing Ratio Test During 4 to 5 Upshift. DNS, DNA and RPR conditions exists. Transmission service light **ON**. This code is logged to real time to protect the transmission in case a loss of power to the TCU (power interruption code 3500) occurs.	Incorrect transmission oil level.	Add or drain oil to obtain correct level.
	Wiring or connections.	Check transmission control harness (W12) and transmission harness (W13).
	Turbine speed sensor (B12).	Check resistance of speed sensor. **(See "Transmission Speed Sensors Test" on page 199)**.
	Output speed sensor (B13).	Check resistance of speed sensor. **(See "Transmission Speed Sensors Test" on page 199)**.
	Transmission internal wiring or malfunctioning solenoid.	Check the solenoid. **(See "Transmission Solenoids Test" on page 199)**. Replace transmission harness or solenoid. **(See Disassemble and Assemble Control Valve in CHAPTER 3, SECTION 3 in the Rapier Manual)**.
	TCU (A5).	Replace TCU. **(See "Remove and Install Transmission Control Unit" on page 202)**.
5146 - Ofgoing Ratio Test During 4 to 6 Upshift. DNS, DNA and RPR conditions exists. Transmission service light **ON**.	Incorrect transmission oil level.	Add or drain oil to obtain correct level.
	Wiring or connections.	Check transmission control harness (W12) and transmission harness (W13).
	Turbine speed sensor (B12).	Check resistance of speed sensor. **(See "Transmission Speed Sensors Test" on page 199)**.
	Output speed sensor (B13).	Check resistance of speed sensor. **(See "Transmission Speed Sensors Test" on page 199)**.
	Transmission internal wiring or malfunctioning solenoid.	Check the solenoid. **(See "Transmission Solenoids Test" on page 199)**. Replace transmission harness or solenoid. **(See Disassemble and Assemble Control Valve in CHAPTER 3, SECTION 3 in the Rapier Manual)**.
	TCU (A5).	Replace TCU. **(See "Remove and Install Transmission Control Unit" on page 202)**.

		Transmission Control Unit" on page 202).

Code - Symptom	Problem	Solution
5153 - Ofgoing Ratio Test During 5 to 3 Downshift. DNS, DNA and RPR conditions exists. Transmission service light **ON**.	Incorrect transmission oil level.	Add or drain oil to obtain correct level.
	Wiring or connections.	Check transmission control harness (W12) and transmission harness (W13).
	Turbine speed sensor (B12).	Check resistance of speed sensor. **(See "Transmission Speed Sensors Test" on page 199)**.
	Output speed sensor (B13).	Check resistance of speed sensor. **(See "Transmission Speed Sensors Test" on page 199)**.
	Transmission internal wiring or malfunctioning solenoid.	Check the solenoid. **(See "Transmission Solenoids Test" on page 199)**. Replace transmission harness or solenoid. **(See Disassemble and Assemble Control Valve in CHAPTER 3, SECTION 3 in the Rapier Manual)**.
	TCU (A5).	Replace TCU. **(See "Remove and Install Transmission Control Unit" on page 202)**.
5164 - Ofgoing Ratio Test During 6 to 4 Downshift. DNS, DNA and RPR conditions exists. Transmission service light **ON**.	Incorrect transmission oil level.	Add or drain oil to obtain correct level.
	Wiring or connections.	Check transmission control harness (W12) and transmission harness (W13).
	Turbine speed sensor (B12).	Check resistance of speed sensor. **(See "Transmission Speed Sensors Test" on page 199)**.
	Output speed sensor (B13).	Check resistance of speed sensor. **(See "Transmission Speed Sensors Test" on page 199)**.
	Transmission internal wiring or malfunctioning solenoid.	Check the solenoid. **(See "Transmission Solenoids Test" on page 199)**. Replace transmission harness or solenoid. **(See Disassemble and Assemble Control Valve in CHAPTER 3, SECTION 3 in the Rapier Manual)**.
	TCU (A5).	Replace TCU. **(See "Remove and Install Transmission Control Unit" on page 202)**.

		Transmission Control Unit" on page 202).

Code - Symptom	Problem	Solution
5165 - Ofgoing Ratio Test During 6 to 5 Downshift. DNS, DNA and RPR conditions exists. Transmission service light **ON**.	Incorrect transmission oil level.	Add or drain oil to obtain correct level.
	Wiring or connections.	Check transmission control harness (W12) and transmission harness (W13).
	Turbine speed sensor (B12).	Check resistance of speed sensor. **(See "Transmission Speed Sensors Test" on page 199)**.
	Output speed sensor (B13).	Check resistance of speed sensor. **(See "Transmission Speed Sensors Test" on page 199)**.
	Transmission internal wiring or malfunctioning solenoid.	Check the solenoid. **(See "Transmission Solenoids Test" on page 199)**. Replace transmission harness or solenoid. **(See Disassemble and Assemble Control Valve in CHAPTER 3, SECTION 3 in the Rapier Manual)**.
	TCU (A5).	Replace TCU. **(See "Remove and Install Transmission Control Unit" on page 202)**.
51XY - Ofgoing Ratio Test During **X** to **Y** Shift. Additional codes could be logged for other shifts where **X** indicates range shifted from and **Y** indicates range shifted to.	Incorrect transmission oil level.	Add or drain oil to obtain correct level.
	Wiring or connections.	Check transmission control harness (W12) and transmission harness (W13).
	Turbine speed sensor (B12).	Check resistance of speed sensor. **(See "Transmission Speed Sensors Test" on page 199)**.
	Output speed sensor (B13).	Check resistance of speed sensor. **(See "Transmission Speed Sensors Test" on page 199)**.
	Transmission internal wiring or malfunctioning solenoid.	Check the solenoid. **(See "Transmission Solenoids Test" on page 199)**. Replace transmission harness or solenoid. **(See Disassemble and Assemble Control Valve in CHAPTER 3, SECTION 3 in the Rapier Manual)**.
	TCU (A5).	Replace TCU. **(See "Remove and Install Transmission Control Unit" on page 202)**.

		Transmission Control Unit" on page 202).

Code - Symptom	Problem	Solution
5232 - Ofgoing C3PS Test During 3 to 2 Downshift. DNS, DNA and RPR conditions exists. Transmission service light **ON**.	Incorrect transmission oil level.	Add or drain oil to obtain correct level.
	Wiring or connections.	Check transmission control harness (W12) and transmission harness (W13).
	Turbine speed sensor (B12).	Check resistance of speed sensor. **(See "Transmission Speed Sensors Test" on page 199)**.
	Output speed sensor (B13).	Check resistance of speed sensor. **(See "Transmission Speed Sensors Test" on page 199)**.
	Transmission internal wiring or malfunctioning solenoid.	Check the solenoid. **(See "Transmission Solenoids Test" on page 199)**. Replace transmission harness or solenoid. **(See Disassemble and Assemble Control Valve in CHAPTER 3, SECTION 3 in the Rapier Manual)**.
	TCU (A5).	Replace TCU. **(See "Remove and Install Transmission Control Unit" on page 202)**.
5234 - Ofgoing C3PS Test During 3 to 4 Upshift. DNS, DNA and RPR conditions exists. Transmission service light **ON**.	Wiring or connections.	Check transmission control harness (W12) and transmission harness (W13).
	Transmission internal wiring or malfunctioning C3 pressure switch.	Replace transmission harness or C3 pressure switch. **(See Disassemble and Assemble Control Valve in CHAPTER 3, SECTION 3 in the Rapier Manual)**.
	Damaged valve body gaskets or stuck (or sticky) valves.	Replace gaskets. Clean or replace valves as necessary **(See Disassemble and Assemble Control Valve in CHAPTER 3, SECTION 3 in the Rapier Manual)**.
	TCU (A5).	Replace TCU. **(See "Remove and Install Transmission Control Unit" on page 202)**.

Code - Symptom	Problem	Solution
5254 - Ofgoing C3PS Test During 5 to 4 Upshift. DNS, DNA and RPR conditions exists. Transmission service light **ON**.	Wiring or connections. Transmission internal wiring or malfunctioning C3 pressure switch. Damaged valve body gaskets or stuck (or sticky) valves. TCU (A5).	Check transmission control harness (W12) and transmission harness (W13). Check the solenoid. **(See "Transmission Solenoids Test" on page 199)**. Replace transmission harness or C3 pressure switch. **(See Disassemble and Assemble Control Valve in CHAPTER 3, SECTION 3 in the Rapier Manual)**. Replace gaskets. Clean or replace valves as necessary. **(See Disassemble and Assemble Control Valve in CHAPTER 3, SECTION 3 in the Rapier Manual)**. Replace TCU. **(See "Remove and Install Transmission Control Unit" on page 202)**.
5256 - Ofgoing C3PS Test During 5 to 6 Upshift. DNS, DNA and RPR conditions exists. Transmission service light **ON**.	Wiring or connections. Transmission internal wiring or malfunctioning C3 pressure switch. Damaged valve body gaskets or stuck (or sticky) valves. TCU (A5).	Check transmission control harness (W12) and transmission harness (W13). Replace transmission harness or C3 pressure switch. **(See Disassemble and Assemble Control Valve in CHAPTER 3, SECTION 3 in the Rapier Manual)**. Replace gaskets. Clean or replace valves as necessary **(See Disassemble and Assemble Control Valve in CHAPTER 3, SECTION 3 in the Rapier Manual)**. Replace TCU. **(See "Remove and Install Transmission Control Unit" on page 202)**.
5271 - Ofgoing C3PS Test During R to 1 Shift. DNS, DNA and NNC conditions exists. Transmission service light **ON**.	Wiring or connections. Transmission internal wiring or malfunctioning C3 pressure switch. Damaged valve body	Check transmission control harness (W12) and transmission harness (W13). Replace transmission harness or C3 pressure switch. **(See Disassemble and Assemble Control Valve in CHAPTER 3, SECTION 3 in the Rapier Manual)**. Replace gaskets. Clean or replace valves as necessary **(See Disassemble and**

	gaskets or stuck (or sticky) valves. TCU (A5).	**Assemble Control Valve in CHAPTER 3, SECTION 3 in the Rapier Manual)**. Replace TCU. **(See "Remove and Install Transmission Control Unit" on page 202)**.

Code - Symptom	Problem	Solution
5272 - Ofgoing C3PS Test During R to 2 Shift. DNS, DNA and NNC conditions exists. Transmission service light **ON**.	Wiring or connections. Transmission internal wiring or malfunctioning C3 pressure switch. Damaged valve body gaskets or stuck (or sticky) valves. TCU (A5).	Check transmission control harness (W12) and transmission harness (W13). Replace transmission harness or C3 pressure switch. **(See Disassemble and Assemble Control Valve in CHAPTER 3, SECTION 3 in the Rapier Manual)**. Replace gaskets. Clean or replace valves as necessary **(See Disassemble and Assemble Control Valve in CHAPTER 3, SECTION 3 in the Rapier Manual)**. Replace TCU. **(See "Remove and Install Transmission Control Unit" on page 202)**.
5278 - Ofgoing C3PS Test During R to N1 Shift. DNS, DNA and NNC conditions exists. Transmission service light **ON**.	Wiring or connections. Transmission internal wiring or malfunctioning C3 pressure switch. Damaged valve body gaskets or stuck (or sticky) valves. TCU (A5).	Check transmission control harness (W12) and transmission harness (W13). Replace transmission harness or C3 pressure switch. **(See Disassemble and Assemble Control Valve in CHAPTER 3, SECTION 3 in the Rapier Manual)**. Replace gaskets. Clean or replace valves as necessary **(See Disassemble and Assemble Control Valve in CHAPTER 3, SECTION 3 in the Rapier Manual)**. Replace TCU. **(See "Remove and Install Transmission Control Unit" on page 202)**.
5299 - Ofgoing C3PS Test During N3 to N2 Shift. DNS, DNA and RPR conditions exists. Transmission service light **ON**.	Wiring or connections. Transmission internal wiring or malfunctioning C3 pressure switch. Damaged valve body gaskets or stuck (or sticky) valves.	Check transmission control harness (W12) and transmission harness (W13). Replace transmission harness or C3 pressure switch. **(See Disassemble and Assemble Control Valve in CHAPTER 3, SECTION 3 in the Rapier Manual)**. Replace gaskets. Clean or replace valves as necessary **(See Disassemble and Assemble Control Valve in CHAPTER 3, SECTION 3 in the Rapier Manual)**. Replace TCU. **(See "Remove and Install**

	TCU (A5).	**Transmission Control Unit" on page 202)**.

Code - Symptom	Problem	Solution
52XY - Ofgoing C3PS Test During X to Y Shift. Additional codes could be logged for other shifts where X indicates range shifted from and Y indicates range shifted to.	Wiring or connections. Transmission internal wiring or malfunctioning C3 pressure switch. Damaged valve body gaskets or stuck (or sticky) valves. TCU (A5).	Check transmission control harness (W12) and transmission harness (W13). Replace transmission harness or C3 pressure switch. **(See Disassemble and Assemble Control Valve in CHAPTER 3, SECTION 3 in the Rapier Manual)**. Replace gaskets. Clean or replace valves as necessary **(See Disassemble and Assemble Control Valve in CHAPTER 3, SECTION 3 in the Rapier Manual)**. Replace TCU. **(See "Remove and Install Transmission Control Unit" on page 202)**.
5318 - Ofgoing C3PS Test During N3 to N2 Shift. DNS, DNA and NNC conditions exists. Transmission service light **ON**. This code is logged to real time to protect the transmission in case a loss of power to the TCU (power interruption code 3500) occurs.	Turbine speed sensor (B12). Input speed sensor (B14). Wiring or connections. Damaged valve body gaskets or stuck (or sticky) valves. TCU (A5).	Check resistance of speed sensor. **(See "Transmission Speed Sensors Test" on page 199)**. Check resistance of speed sensor. (See "Transmission Speed Sensors Test" on page 199). Check transmission control harness (W12) and transmission harness (W13). Check internal transmission harness. **(See Disassemble and Assemble Control Valve in CHAPTER 3, SECTION 3 in the Rapier Manual)**. Replace gaskets. Clean or replace valves as necessary **(See Disassemble and Assemble Control Valve in CHAPTER 3, SECTION 3 in the Rapier Manual)**. Replace TCU. **(See "Remove and Install Transmission Control Unit" on page 202)**.

Code - Symptom	Problem	Solution
5328 - Ofgoing C3PS Test During N3 to N2 Shift. DNS, DNA and NNC conditions exists. Transmission service light **ON**. The ofgoing speed test is not performed if neutral output is less than 200r.p.m. or when temperature is below a calibrated 0° C (32° F). This code is logged to real time to protect the transmission in case a loss of power to the TCU (power interruption code 3500) occurs.	Turbine speed sensor (B12). Input speed sensor (B14). Wiring or connections. Damaged valve body gaskets or stuck (or sticky) valves. TCU (A5).	Check resistance of speed sensor. **(See "Transmission Speed Sensors Test" on page 199)**. Check resistance of speed sensor. **(See "Transmission Speed Sensors Test" on page 199)**. Check transmission control harness (W12) and transmission harness (W13). Check internal transmission harness. **(See Disassemble and Assemble Control Valve in CHAPTER 3, SECTION 3 in the Rapier Manual)**. Replace gaskets. Clean or replace valves as necessary **(See Disassemble and Assemble Control Valve in CHAPTER 3, SECTION 3 in the Rapier Manual)**. Replace TCU. **(See "Remove and Install Transmission Control Unit" on page 202)**.
5329 - Ofgoing C3PS Test During N3 to N2 Shift. DNS, DNA and RPR conditions exists. Transmission service light **ON**. The ofgoing speed test is not performed if neutral output is less than 200r.p.m. or when temperature is below a calibrated 0° C (32° F). This code is logged to real time to protect the transmission in case a	Turbine speed sensor (B12). Input speed sensor (B14). Wiring or connections. Damaged valve body gaskets or stuck (or sticky) valves.	Check resistance of speed sensor. **(See "Transmission Speed Sensors Test" on page 199)**. Check resistance of speed sensor. **(See "Transmission Speed Sensors Test" on page 199)**. Check transmission control harness (W12) and transmission harness (W13). Check internal transmission harness. **(See Disassemble and Assemble Control Valve in CHAPTER 3, SECTION 3 in the Rapier Manual)**. Replace gaskets. Clean or replace valves as necessary **(See Disassemble and Assemble Control Valve in CHAPTER 3, SECTION 3 in the Rapier Manual)**. Replace TCU. **(See "Remove and Install**

loss of power to the TCU (power interruption code 3500) occurs.	TCU (A5).	Replace TCU. **(See "Remove and Install Transmission Control Unit" on page 202)**.

Code - Symptom	Problem	Solution
5338 - Ofgoing C3PS Test During 3 to N1 Shift. DNS, DNA and NNC conditions exists. Transmission service light **ON**. The ofgoing speed test is not performed if neutral output is less than 200r.p.m. or when temperature is below a calibrated 0° C (32° F). This code is logged to real time to protect the transmission in case a loss of power to the TCU (power interruption code 3500) occurs.	Turbine speed sensor (B12). Input speed sensor (B14). Wiring or connections. Damaged valve body gaskets or stuck (or sticky) valves. TCU (A5).	Check resistance of speed sensor. **(See "Transmission Speed Sensors Test" on page 199)**. Check resistance of speed sensor. **(See "Transmission Speed Sensors Test" on page 199)**. Check transmission control harness (W12) and transmission harness (W13). Check internal transmission harness. **(See Disassemble and Assemble Control Valve in CHAPTER 3, SECTION 3 in the Rapier Manual)**. Replace gaskets. Clean or replace valves as necessary **(See Disassemble and Assemble Control Valve in CHAPTER 3, SECTION 3 in the Rapier Manual)**. Replace TCU. **(See "Remove and Install Transmission Control Unit" on page 202)**.
5339 - Ofgoing C3PS Test During 3 to N3 Shift. DNS, DNA and RPR conditions exists. Transmission service light **ON**. The ofgoing speed test is not performed if neutral output is less than 200r.p.m. or when temperature is below a calibrated 0° C (32° F). This code is logged to real time to protect the transmission in case a	Turbine speed sensor (B12). Input speed sensor (B14). Wiring or connections. Damaged valve body gaskets or stuck (or sticky) valves.	Check resistance of speed sensor. **(See "Transmission Speed Sensors Test" on page 199)**. Check resistance of speed sensor. **(See "Transmission Speed Sensors Test" on page 199)**. Check transmission control harness (W12) and transmission harness (W13). Check internal transmission harness. **(See Disassemble and Assemble Control Valve in CHAPTER 3, SECTION 3 in the Rapier Manual)**. Replace gaskets. Clean or replace valves as necessary **(See Disassemble and Assemble Control Valve in CHAPTER 3, SECTION 3 in the Rapier Manual)**.

loss of power to the TCU (power interruption code 3500) occurs.	TCU (A5).	Replace TCU. **(See "Remove and Install Transmission Control Unit" on page 202)**.

Code - Symptom	Problem	Solution
5348 - Ofgoing C3PS Test During 4 to N1 Shift. DNS, DNA and NNC conditions exists. Transmission service light **ON**. The ofgoing speed test is not performed if neutral output is less than 200r.p.m. or when temperature is below a calibrated 0° C (32° F). This code is logged to real time to protect the transmission in case a loss of power to the TCU (power interruption code 3500) occurs.	Turbine speed sensor (B12). Input speed sensor (B14). Wiring or connections. Damaged valve body gaskets or stuck (or sticky) valves. TCU (A5).	Check resistance of speed sensor. **(See "Transmission Speed Sensors Test" on page 199)**. Check resistance of speed sensor. **(See "Transmission Speed Sensors Test" on page 199)**. Check transmission control harness (W12) and transmission harness (W13). Check internal transmission harness. **(See Disassemble and Assemble Control Valve in CHAPTER 3, SECTION 3 in the Rapier Manual)**. Replace gaskets. Clean or replace valves as necessary **(See Disassemble and Assemble Control Valve in CHAPTER 3, SECTION 3 in the Rapier Manual)**. Replace TCU. **(See "Remove and Install Transmission Control Unit" on page 202)**.
5348 - Ofgoing C3PS Test During 4 to N3 Shift. DNS, DNA and RPR conditions exists. Transmission service light **ON**. The ofgoing speed test is not performed if neutral output is less than 200r.p.m. or when temperature is below a calibrated 0° C (32° F). This code is logged to real time to protect the transmission in case a	Turbine speed sensor (B12). Input speed sensor (B14). Wiring or connections. Damaged valve body gaskets or stuck (or sticky) valves.	Check resistance of speed sensor. **(See "Transmission Speed Sensors Test" on page 199)**. Check resistance of speed sensor. **(See "Transmission Speed Sensors Test" on page 199)**. Check transmission control harness (W12) and transmission harness (W13). Check internal transmission harness. **(See Disassemble and Assemble Control Valve in CHAPTER 3, SECTION 3 in the Rapier Manual)**. Replace gaskets. Clean or replace valves as necessary **(See Disassemble and Assemble Control Valve in CHAPTER 3, SECTION 3 in the Rapier Manual)**. Replace TCU. **(See "Remove and Install**

loss of power to the TCU (power interruption code 3500) occurs.	TCU (A5).	Replace TCU. **(See "Remove and Install Transmission Control Unit" on page 202)**.

Code - Symptom	Problem	Solution
5358 - Ofgoing C3PS Test During 5 to N1 Shift.	Turbine speed sensor (B12).	Check resistance of speed sensor. **(See "Transmission Speed Sensors Test" on page 199)**.
DNS, DNA and NNC conditions exists. Transmission service light **ON**. The ofgoing speed test is not performed if neutral output is less than 200r.p.m. or when temperature is below a calibrated 0° C (32° F). This code is logged to real time to protect the transmission in case a loss of power to the TCU (power interruption code 3500) occurs.	Input speed sensor (B14).	Check resistance of speed sensor. **(See "Transmission Speed Sensors Test" on page 199)**.
	Wiring or connections.	Check transmission control harness (W12) and transmission harness (W13). Check internal transmission harness. **(See Disassemble and Assemble Control Valve in CHAPTER 3, SECTION 3 in the Rapier Manual)**.
	Damaged valve body gaskets or stuck (or sticky) valves.	Replace gaskets. Clean or replace valves as necessary **(See Disassemble and Assemble Control Valve in CHAPTER 3, SECTION 3 in the Rapier Manual)**.
	TCU (A5).	Replace TCU. **(See "Remove and Install Transmission Control Unit" on page 202)**.
5359 - Ofgoing C3PS Test During 5 to N3 Shift. DNS, DNA and RPR conditions exists. Transmission service light **ON**. The ofgoing speed test is not performed if neutral output is less than 200r.p.m. or when temperature is below a calibrated 0° C (32° F). This code is logged to real time to protect the transmission in case a	Turbine speed sensor (B12).	Check resistance of speed sensor. **(See "Transmission Speed Sensors Test" on page 199)**.
	Input speed sensor (B14).	Check resistance of speed sensor. **(See "Transmission Speed Sensors Test" on page 199)**.
	Wiring or connections.	Check transmission control harness (W12) and transmission harness (W13). Check internal transmission harness. **(See Disassemble and Assemble Control Valve in CHAPTER 3, SECTION 3 in the Rapier Manual)**.
	Damaged valve body gaskets or stuck (or sticky) valves.	Replace gaskets. Clean or replace valves as necessary **(See Disassemble and Assemble Control Valve in CHAPTER 3, SECTION 3 in the Rapier Manual)**.
		Replace TCU. **(See "Remove and Install**

loss of power to the TCU (power interruption code 3500) occurs.	TCU (A5).	Replace TCU. **(See "Remove and Install Transmission Control Unit" on page 202)**.

Code - Symptom	Problem	Solution
5368 - Ofgoing C3PS Test During 6 to N1 Shift. DNS, DNA and NNC conditions exists. Transmission service light **ON**. The ofgoing speed test is not performed if neutral output is less than 200r.p.m. or when temperature is below a calibrated 0° C (32° F). This code is logged to real time to protect the transmission in case a loss of power to the TCU (power interruption code 3500) occurs.	Turbine speed sensor (B12). Input speed sensor (B14). Wiring or connections. Damaged valve body gaskets or stuck (or sticky) valves. TCU (A5).	Check resistance of speed sensor. **(See "Transmission Speed Sensors Test" on page 199)**. Check resistance of speed sensor. **(See "Transmission Speed Sensors Test" on page 199)**. Check transmission control harness (W12) and transmission harness (W13). Check internal transmission harness. **(See Disassemble and Assemble Control Valve in CHAPTER 3, SECTION 3 in the Rapier Manual)**. Replace gaskets. Clean or replace valves as necessary **(See Disassemble and Assemble Control Valve in CHAPTER 3, SECTION 3 in the Rapier Manual)**. Replace TCU. **(See "Remove and Install Transmission Control Unit" on page 202)**.
5369 - Ofgoing C3PS Test During 4 to N1 Shift. DNS, DNA and RPR conditions exists. Transmission service light **ON**. The ofgoing speed test is not performed if neutral output is less than 200r.p.m. or when temperature is below a calibrated 0° C (32° F). This code is logged to real time to protect the transmission in case a	Turbine speed sensor (B12). Input speed sensor (B14). Wiring or connections. Damaged valve body gaskets or stuck (or sticky) valves.	Check resistance of speed sensor. **(See "Transmission Speed Sensors Test" on page 199)**. Check resistance of speed sensor. **(See "Transmission Speed Sensors Test" on page 199)**. Check transmission control harness (W12) and transmission harness (W13). Check internal transmission harness. **(See Disassemble and Assemble Control Valve in CHAPTER 3, SECTION 3 in the Rapier Manual)**. Replace gaskets. Clean or replace valves as necessary **(See Disassemble and Assemble Control Valve in CHAPTER 3, SECTION 3 in the Rapier Manual)**. Replace TCU. **(See "Remove and Install**

loss of power to the TCU (power interruption code 3500) occurs.	TCU (A5).	Replace TCU. **(See "Remove and Install Transmission Control Unit" on page 202)**.

Code - Symptom	Problem	Solution
5378 - Ofgoing C3PS Test During 4 to N1 Shift.	Turbine speed sensor (B12).	Check resistance of speed sensor. **(See "Transmission Speed Sensors Test" on page 199)**.
DNS, DNA and NNC conditions exists. Transmission service light **ON**. The ofgoing speed test is not performed if neutral output is less than 200r.p.m. or when temperature is below a calibrated 0° C (32° F).	Input speed sensor (B14).	Check resistance of speed sensor. **(See "Transmission Speed Sensors Test" on page 199)**.
	Wiring or connections.	Check transmission control harness (W12) and transmission harness (W13). Check internal transmission harness. **(See Disassemble and Assemble Control Valve in CHAPTER 3, SECTION 3 in the Rapier Manual)**.
	Damaged valve body gaskets or stuck (or sticky) valves.	Replace gaskets. Clean or replace valves as necessary **(See Disassemble and Assemble Control Valve in CHAPTER 3, SECTION 3 in the Rapier Manual)**.
	TCU (A5).	Replace TCU. **(See "Remove and Install Transmission Control Unit" on page 202)**.
5399 - Ofgoing C3PS Test During 4 to N1 Shift.	Turbine speed sensor (B12).	Check resistance of speed sensor. **(See "Transmission Speed Sensors Test" on page 199)**.
DNS, DNA and RPR conditions exists. Transmission service light **ON**. The ofgoing speed test is not performed if neutral output is less than 200r.p.m. or when temperature is below a calibrated 0° C (32° F).	Input speed sensor (B14).	Check resistance of speed sensor. **(See "Transmission Speed Sensors Test" on page 199)**.
	Wiring or connections.	Check transmission control harness (W12) and transmission harness (W13). Check internal transmission harness. **(See Disassemble and Assemble Control Valve in CHAPTER 3, SECTION 3 in the Rapier Manual)**.
	Damaged valve body gaskets or stuck (or sticky) valves.	Replace gaskets. Clean or replace valves as necessary **(See Disassemble and Assemble Control Valve in CHAPTER 3, SECTION 3 in the Rapier Manual)**.
	TCU (A5).	Replace TCU. **(See "Remove and Install Transmission Control Unit" on page 202)**.

Code - Symptom	Problem	Solution
53XY - Ofgoing Speed Test During X to Y Shift.	Turbine speed sensor (B12).	Check resistance of speed sensor. **(See "Transmission Speed Sensors Test" on page 199)**.
Additional codes could be logged for other shifts where X indicates range shifted from and Y indicates range shifted to.	Input speed sensor (B14).	Check resistance of speed sensor. **(See "Transmission Speed Sensors Test" on page 199)**.
	Wiring or connections.	Check transmission control harness (W12) and transmission harness (W13).
The ofgoing speed test is not performed if neutral output is less than 200r.p.m. or when temperature is below a calibrated 0° C (32° F).		Check internal transmission harness. **(See Disassemble and Assemble Control Valve in CHAPTER 3, SECTION 3 in the Rapier Manual)**.
	Damaged valve body gaskets or stuck (or sticky) valves.	Replace gaskets. Clean or replace valves as necessary **(See Disassemble and Assemble Control Valve in CHAPTER 3, SECTION 3 in the Rapier Manual)**.
	TCU (A5).	Replace TCU. **(See "Remove and Install Transmission Control Unit" on page 202)**.
5412 - Oncoming Ratio Test After 1 to 2 Upshift.	Oil level too low or too high.	Add or remove oil to obtain correct level. **(See CHAPTER 1 in the OMM for correct oil specifications).**
DNS, DNA and RPR conditions exists.	TCU calibrated for wrong transmission.	Calibrate TCU so it's compatible to transmission.
Transmission service light **ON**.	Turbine speed sensor (B12).	Check resistance of speed sensor. **(See "Transmission Speed Sensors Test" on page 199)**.
	Output speed sensor (B13).	Check resistance of speed sensor. **(See "Transmission Speed Sensors Test" on page 199)**.
	Wiring or connections.	Check transmission control harness (W12) and transmission harness (W13).
		Check internal transmission harness. **(See Disassemble and Assemble Control Valve in CHAPTER 3, SECTION 3 in the Rapier Manual)**.
	Damaged valve body	Replace gaskets. Clean or replace valves as

	gaskets or stuck (or sticky) valves.	necessary **(See Disassemble and Assemble Control Valve in CHAPTER 3, SECTION 3 in the Rapier Manual)**.
	Worn or damaged clutches.	Repair or replace transmission. **(See Remove and Install Transmission CHAPTER 3, SECTION 1 and CHAPTER 3, SECTION 3 in the Repair Manual)**.
	TCU (A5).	Replace TCU. **(See "Remove and Install Transmission Control Unit" on page 202)**.

Code - Symptom	Problem	Solution
5417 - Oncoming Ratio Test After 1 to R Upshift.	Oil level too low or too high.	Add or remove oil to obtain correct level. **(See CHAPTER 1 in the OMM for correct oil specifications).**
DNS, DNA and NNC conditions exists.	Turbine speed sensor (B12).	Check resistance of speed sensor. **(See "Transmission Speed Sensors Test" on page 199)**.
Transmission service light **ON**.	Output speed sensor (B13).	Check resistance of speed sensor. **(See "Transmission Speed Sensors Test" on page 199)**.
	Wiring or connections.	Check transmission control harness (W12) and transmission harness (W13). Check internal transmission harness. **(See Disassemble and Assemble Control Valve in CHAPTER 3, SECTION 3 in the Rapier Manual)**.
	Damaged valve body gaskets or stuck (or sticky) valves.	Replace gaskets. Clean or replace valves as necessary **(See Disassemble and Assemble Control Valve in CHAPTER 3, SECTION 3 in the Rapier Manual)**.
	Worn or damaged clutches.	Repair or replace transmission. **(See Remove and Install Transmission CHAPTER 3, SECTION 1 and CHAPTER 3, SECTION 3 in the Repair Manual)**.
	TCU (A5).	Replace TCU. **(See "Remove and Install Transmission Control Unit" on page 202)**.

Code - Symptom	Problem	Solution
5421 - Oncoming Ratio Test After 2 to 1 Downshift.	Oil level too low or too high.	Add or remove oil to obtain correct level. **(See CHAPTER 1 in the OMM for correct oil specifications).**
DNS, DNA and RPR conditions exists. Transmission service light **ON**.	Turbine speed sensor (B12).	Check resistance of speed sensor. **(See "Transmission Speed Sensors Test" on page 199)**.
	Output speed sensor (B13).	Check resistance of speed sensor. **(See "Transmission Speed Sensors Test" on page 199)**.
	Wiring or connections.	Check transmission control harness (W12) and transmission harness (W13).
		Check internal transmission harness. **(See Disassemble and Assemble Control Valve in CHAPTER 3, SECTION 3 in the Rapier Manual)**.
	Damaged valve body gaskets or stuck (or sticky) valves.	Replace gaskets. Clean or replace valves as necessary **(See Disassemble and Assemble Control Valve in CHAPTER 3, SECTION 3 in the Rapier Manual)**.
	Worn or damaged clutches.	Repair or replace transmission. **(See Remove and Install Transmission CHAPTER 3, SECTION 1 and CHAPTER 3, SECTION 3 in the Repair Manual)**.
	TCU (A5).	Replace TCU. **(See "Remove and Install Transmission Control Unit" on page 202)**.

Code - Symptom	Problem	Solution
5423 - Oncoming Ratio Test After 2 to 3 Upshift. DNS, DNA and RPR conditions exists. Transmission service light **ON**.	Oil level too low or too high.	Add or remove oil to obtain correct level. **(See CHAPTER 1 in the OMM for correct oil specifications).**
	Turbine speed sensor (B12).	Check resistance of speed sensor. **(See "Transmission Speed Sensors Test" on page 199)**.
	Output speed sensor (B13).	Check resistance of speed sensor. **(See "Transmission Speed Sensors Test" on page 199)**.
	Wiring or connections.	Check transmission control harness (W12) and transmission harness (W13). Check internal transmission harness. **(See Disassemble and Assemble Control Valve in CHAPTER 3, SECTION 3 in the Rapier Manual)**.
	Damaged valve body gaskets or stuck (or sticky) valves.	Replace gaskets. Clean or replace valves as necessary **(See Disassemble and Assemble Control Valve in CHAPTER 3, SECTION 3 in the Rapier Manual)**.
	Worn or damaged clutches.	Repair or replace transmission. **(See Remove and Install Transmission CHAPTER 3, SECTION 1 and CHAPTER 3, SECTION 3 in the Repair Manual)**.
	TCU (A5).	Replace TCU. **(See "Remove and Install Transmission Control Unit" on page 202)**.

Code - Symptom	Problem	Solution
5424 - Oncoming Ratio Test After 2 to 4 Upshift. DNS, DNA and RPR conditions exists. Transmission service light **ON**.	Oil level too low or too high.	Add or remove oil to obtain correct level. **(See CHAPTER 1 in the OMM for correct oil specifications).**
	Turbine speed sensor (B12).	Check resistance of speed sensor. **(See "Transmission Speed Sensors Test" on page 199)**.
	Output speed sensor (B13).	Check resistance of speed sensor. **(See "Transmission Speed Sensors Test" on page 199)**.
	Wiring or connections.	Check transmission control harness (W12) and transmission harness (W13). Check internal transmission harness. **(See Disassemble and Assemble Control Valve in CHAPTER 3, SECTION 3 in the Rapier Manual)**.
	Damaged valve body gaskets or stuck (or sticky) valves.	Replace gaskets. Clean or replace valves as necessary **(See Disassemble and Assemble Control Valve in CHAPTER 3, SECTION 3 in the Rapier Manual)**.
	Worn or damaged clutches.	Repair or replace transmission. **(See Remove and Install Transmission CHAPTER 3, SECTION 1 and CHAPTER 3, SECTION 3 in the Repair Manual)**.
	TCU (A5).	Replace TCU. **(See "Remove and Install Transmission Control Unit" on page 202)**.

Code - Symptom	Problem	Solution
5427 - Oncoming Ratio Test After 2 to R Shift.	Oil level too low or too high.	Add or remove oil to obtain correct level. **(See CHAPTER 1 in the OMM for correct oil specifications).**
DNS, DNA and RPR conditions exists. Transmission service light **ON**.	Turbine speed sensor (B12).	Check resistance of speed sensor. **(See "Transmission Speed Sensors Test" on page 199)**.
	Output speed sensor (B13).	Check resistance of speed sensor. **(See "Transmission Speed Sensors Test" on page 199)**.
	Wiring or connections.	Check transmission control harness (W12) and transmission harness (W13). Check internal transmission harness. **(See Disassemble and Assemble Control Valve in CHAPTER 3, SECTION 3 in the Rapier Manual)**.
	Damaged valve body gaskets or stuck (or sticky) valves.	Replace gaskets. Clean or replace valves as necessary **(See Disassemble and Assemble Control Valve in CHAPTER 3, SECTION 3 in the Rapier Manual)**.
	Worn or damaged clutches.	Repair or replace transmission. **(See Remove and Install Transmission CHAPTER 3, SECTION 1 and CHAPTER 3, SECTION 3 in the Repair Manual)**.
	TCU (A5).	Replace TCU. **(See "Remove and Install Transmission Control Unit" on page 202)**.

Code - Symptom	Problem	Solution
5412 - Oncoming Ratio Test After 3 to 2 Downshift.	Oil level too low or too high.	Add or remove oil to obtain correct level. **(See CHAPTER 1 in the OMM for correct oil specifications).**
DNS, DNA and RPR conditions exists. Transmission service light **ON**.	Turbine speed sensor (B12).	Check resistance of speed sensor. **(See "Transmission Speed Sensors Test" on page 199)**.
	Output speed sensor (B13).	Check resistance of speed sensor. **(See "Transmission Speed Sensors Test" on page 199)**.
	Wiring or connections.	Check transmission control harness (W12) and transmission harness (W13). Check internal transmission harness. **(See Disassemble and Assemble Control Valve in CHAPTER 3, SECTION 3 in the Rapier Manual)**.
	Damaged valve body gaskets or stuck (or sticky) valves.	Replace gaskets. Clean or replace valves as necessary **(See Disassemble and Assemble Control Valve in CHAPTER 3, SECTION 3 in the Rapier Manual)**.
	Worn or damaged clutches.	Repair or replace transmission. **(See Remove and Install Transmission CHAPTER 3, SECTION 1 and CHAPTER 3, SECTION 3 in the Repair Manual)**.
	TCU (A5).	Replace TCU. **(See "Remove and Install Transmission Control Unit" on page 202)**.

Code - Symptom	Problem	Solution
5434 - Oncoming Ratio Test After 3 to 4 Upshift.	Oil level too low or too high.	Add or remove oil to obtain correct level. **(See CHAPTER 1 in the OMM for correct oil specifications).**
DNS, DNA and RPR conditions exists.	Turbine speed sensor (B12).	Check resistance of speed sensor. **(See "Transmission Speed Sensors Test" on page 199)**.
Transmission service light **ON**.	Output speed sensor (B13).	Check resistance of speed sensor. **(See "Transmission Speed Sensors Test" on page 199)**.
	Wiring or connections.	Check transmission control harness (W12) and transmission harness (W13). Check internal transmission harness. **(See Disassemble and Assemble Control Valve in CHAPTER 3, SECTION 3 in the Rapier Manual)**.
	Damaged valve body gaskets or stuck (or sticky) valves.	Replace gaskets. Clean or replace valves as necessary **(See Disassemble and Assemble Control Valve in CHAPTER 3, SECTION 3 in the Rapier Manual)**.
	Worn or damaged clutches.	Repair or replace transmission. **(See Remove and Install Transmission CHAPTER 3, SECTION 1 and CHAPTER 3, SECTION 3 in the Repair Manual)**.
	TCU (A5).	Replace TCU. **(See "Remove and Install Transmission Control Unit" on page 202)**.

Code - Symptom	Problem	Solution
5435 - Oncoming Ratio Test After 3 to 5 Upshift. DNS, DNA and RPR conditions exists. Transmission service light **ON**.	Oil level too low or too high.	Add or remove oil to obtain correct level. **(See CHAPTER 1 in the OMM for correct oil specifications).**
	Turbine speed sensor (B12).	Check resistance of speed sensor. **(See "Transmission Speed Sensors Test" on page 199)**.
	Output speed sensor (B13).	Check resistance of speed sensor. **(See "Transmission Speed Sensors Test" on page 199)**.
	Wiring or connections.	Check transmission control harness (W12) and transmission harness (W13). Check internal transmission harness. **(See Disassemble and Assemble Control Valve in CHAPTER 3, SECTION 3 in the Rapier Manual)**.
	Damaged valve body gaskets or stuck (or sticky) valves.	Replace gaskets. Clean or replace valves as necessary **(See Disassemble and Assemble Control Valve in CHAPTER 3, SECTION 3 in the Rapier Manual)**.
	Worn or damaged clutches.	Repair or replace transmission. **(See Remove and Install Transmission CHAPTER 3, SECTION 1 and CHAPTER 3, SECTION 3 in the Repair Manual)**.
	TCU (A5).	Replace TCU. **(See "Remove and Install Transmission Control Unit" on page 202)**.

Code - Symptom	Problem	Solution
5442 - Oncoming Ratio Test After 4 to 2 Downshift.	Oil level too low or too high.	Add or remove oil to obtain correct level. **(See CHAPTER 1 in the OMM for correct oil specifications).**
DNS, DNA and RPR conditions exists. Transmission service light **ON**.	Turbine speed sensor (B12).	Check resistance of speed sensor. **(See "Transmission Speed Sensors Test" on page 199)**.
	Output speed sensor (B13).	Check resistance of speed sensor. **(See "Transmission Speed Sensors Test" on page 199)**.
	Wiring or connections.	Check transmission control harness (W12) and transmission harness (W13). Check internal transmission harness. **(See Disassemble and Assemble Control Valve in CHAPTER 3, SECTION 3 in the Rapier Manual)**.
	Damaged valve body gaskets or stuck (or sticky) valves.	Replace gaskets. Clean or replace valves as necessary **(See Disassemble and Assemble Control Valve in CHAPTER 3, SECTION 3 in the Rapier Manual)**.
	Worn or damaged clutches.	Repair or replace transmission. **(See Remove and Install Transmission CHAPTER 3, SECTION 1 and CHAPTER 3, SECTION 3 in the Repair Manual)**.
	TCU (A5).	Replace TCU. **(See "Remove and Install Transmission Control Unit" on page 202)**.

Code - Symptom	Problem	Solution
5443 - Oncoming Ratio Test After 4 to 3 Downshift. DNS, DNA and RPR conditions exists. Transmission service light **ON**.	Oil level too low or too high.	Add or remove oil to obtain correct level. **(See CHAPTER 1 in the OMM for correct oil specifications).**
	Turbine speed sensor (B12).	Check resistance of speed sensor. **(See "Transmission Speed Sensors Test" on page 199)**.
	Output speed sensor (B13).	Check resistance of speed sensor. **(See "Transmission Speed Sensors Test" on page 199)**.
	Wiring or connections.	Check transmission control harness (W12) and transmission harness (W13). Check internal transmission harness. **(See Disassemble and Assemble Control Valve in CHAPTER 3, SECTION 3 in the Rapier Manual)**.
	Damaged valve body gaskets or stuck (or sticky) valves.	Replace gaskets. Clean or replace valves as necessary **(See Disassemble and Assemble Control Valve in CHAPTER 3, SECTION 3 in the Rapier Manual)**.
	Worn or damaged clutches.	Repair or replace transmission. **(See Remove and Install Transmission CHAPTER 3, SECTION 1 and CHAPTER 3, SECTION 3 in the Repair Manual)**.
	TCU (A5).	Replace TCU. **(See "Remove and Install Transmission Control Unit" on page 202)**.

Code - Symptom	Problem	Solution
5445 - Oncoming Ratio Test After 4 to 5 Upshift. DNS, DNA and RPR {or SOL OFF (hydraulic default)} conditions exists. Transmission service light **ON**.	Oil level too low or too high.	Add or remove oil to obtain correct level. **(See CHAPTER 1 in the OMM for correct oil specifications).**
	Turbine speed sensor (B12).	Check resistance of speed sensor. **(See "Transmission Speed Sensors Test" on page 199)**.
	Output speed sensor (B13).	Check resistance of speed sensor. **(See "Transmission Speed Sensors Test" on page 199)**.
	Wiring or connections.	Check transmission control harness (W12) and transmission harness (W13). Check internal transmission harness. **(See Disassemble and Assemble Control Valve in CHAPTER 3, SECTION 3 in the Rapier Manual)**.
	Damaged valve body gaskets or stuck (or sticky) valves.	Replace gaskets. Clean or replace valves as necessary **(See Disassemble and Assemble Control Valve in CHAPTER 3, SECTION 3 in the Rapier Manual)**.
	Worn or damaged clutches.	Repair or replace transmission. **(See Remove and Install Transmission CHAPTER 3, SECTION 1 and CHAPTER 3, SECTION 3 in the Repair Manual)**.
	TCU (A5).	Replace TCU. **(See "Remove and Install Transmission Control Unit" on page 202)**.

Code - Symptom	Problem	Solution
5446 - Oncoming Ratio Test After 4 to 6 Upshift. DNS, DNA and RPR conditions exists. Transmission service light **ON**.	Oil level too low or too high.	Add or remove oil to obtain correct level. **(See CHAPTER 1 in the OMM for correct oil specifications).**
	Turbine speed sensor (B12).	Check resistance of speed sensor. **(See "Transmission Speed Sensors Test" on page 199)**.
	Output speed sensor (B13).	Check resistance of speed sensor. **(See "Transmission Speed Sensors Test" on page 199)**.
	Wiring or connections.	Check transmission control harness (W12) and transmission harness (W13). Check internal transmission harness. **(See Disassemble and Assemble Control Valve in CHAPTER 3, SECTION 3 in the Rapier Manual)**.
	Damaged valve body gaskets or stuck (or sticky) valves.	Replace gaskets. Clean or replace valves as necessary **(See Disassemble and Assemble Control Valve in CHAPTER 3, SECTION 3 in the Rapier Manual)**.
	Worn or damaged clutches.	Repair or replace transmission. **(See Remove and Install Transmission CHAPTER 3, SECTION 1 and CHAPTER 3, SECTION 3 in the Repair Manual)**.
	TCU (A5).	Replace TCU. **(See "Remove and Install Transmission Control Unit" on page 202)**.

Code - Symptom	Problem	Solution
5453 - Oncoming Ratio Test After 5 to 3 Downshift.	Oil level too low or too high.	Add or remove oil to obtain correct level. **(See CHAPTER 1 in the OMM for correct oil specifications).**
DNS, DNA and RPR conditions exists. Transmission service light **ON**.	Turbine speed sensor (B12).	Check resistance of speed sensor. **(See "Transmission Speed Sensors Test" on page 199)**.
	Output speed sensor (B13).	Check resistance of speed sensor. **(See "Transmission Speed Sensors Test" on page 199)**.
	Wiring or connections.	Check transmission control harness (W12) and transmission harness (W13). Check internal transmission harness. **(See Disassemble and Assemble Control Valve in CHAPTER 3, SECTION 3 in the Rapier Manual)**.
	Damaged valve body gaskets or stuck (or sticky) valves.	Replace gaskets. Clean or replace valves as necessary **(See Disassemble and Assemble Control Valve in CHAPTER 3, SECTION 3 in the Rapier Manual)**.
	Worn or damaged clutches.	Repair or replace transmission. **(See Remove and Install Transmission CHAPTER 3, SECTION 1 and CHAPTER 3, SECTION 3 in the Repair Manual)**.
	TCU (A5).	Replace TCU. **(See "Remove and Install Transmission Control Unit" on page 202)**.

Code - Symptom	Problem	Solution
5454 - Oncoming Ratio Test After 5 to 4 Downshift. DNS, DNA and RPR conditions exists. Transmission service light **ON**.	Oil level too low or too high.	Add or remove oil to obtain correct level. **(See CHAPTER 1 in the OMM for correct oil specifications).**
	Turbine speed sensor (B12).	Check resistance of speed sensor. **(See "Transmission Speed Sensors Test" on page 199)**.
	Output speed sensor (B13).	Check resistance of speed sensor. **(See "Transmission Speed Sensors Test" on page 199)**.
	Wiring or connections.	Check transmission control harness (W12) and transmission harness (W13). Check internal transmission harness. **(See Disassemble and Assemble Control Valve in CHAPTER 3, SECTION 3 in the Rapier Manual)**.
	Damaged valve body gaskets or stuck (or sticky) valves.	Replace gaskets. Clean or replace valves as necessary **(See Disassemble and Assemble Control Valve in CHAPTER 3, SECTION 3 in the Rapier Manual)**.
	Worn or damaged clutches.	Repair or replace transmission. **(See Remove and Install Transmission CHAPTER 3, SECTION 1 and CHAPTER 3, SECTION 3 in the Repair Manual)**.
	TCU (A5).	Replace TCU. **(See "Remove and Install Transmission Control Unit" on page 202)**.

Code - Symptom	Problem	Solution
5456 - Oncoming Ratio Test After 5 to 6 Upshift.	Oil level too low or too high.	Add or remove oil to obtain correct level. **(See CHAPTER 1 in the OMM for correct oil specifications).**
DNS, DNA and RPR conditions exists. Transmission service light **ON**.	Turbine speed sensor (B12).	Check resistance of speed sensor. **(See "Transmission Speed Sensors Test" on page 199)**.
	Output speed sensor (B13).	Check resistance of speed sensor. **(See "Transmission Speed Sensors Test" on page 199)**.
	Wiring or connections.	Check transmission control harness (W12) and transmission harness (W13). Check internal transmission harness. **(See Disassemble and Assemble Control Valve in CHAPTER 3, SECTION 3 in the Rapier Manual)**.
	Damaged valve body gaskets or stuck (or sticky) valves.	Replace gaskets. Clean or replace valves as necessary **(See Disassemble and Assemble Control Valve in CHAPTER 3, SECTION 3 in the Rapier Manual)**.
	Worn or damaged clutches.	Repair or replace transmission. **(See Remove and Install Transmission CHAPTER 3, SECTION 1 and CHAPTER 3, SECTION 3 in the Repair Manual)**.
	TCU (A5).	Replace TCU. **(See "Remove and Install Transmission Control Unit" on page 202)**.

Code - Symptom	Problem	Solution
5464 - Oncoming Ratio Test After 6 to 4 Downshift. DNS, DNA and RPR conditions exists. Transmission service light **ON**.	Oil level too low or too high.	Add or remove oil to obtain correct level. **(See CHAPTER 1 in the OMM for correct oil specifications).**
	Turbine speed sensor (B12).	Check resistance of speed sensor. **(See "Transmission Speed Sensors Test" on page 199)**.
	Output speed sensor (B13).	Check resistance of speed sensor. **(See "Transmission Speed Sensors Test" on page 199)**.
	Wiring or connections.	Check transmission control harness (W12) and transmission harness (W13). Check internal transmission harness. **(See Disassemble and Assemble Control Valve in CHAPTER 3, SECTION 3 in the Rapier Manual)**.
	Damaged valve body gaskets or stuck (or sticky) valves.	Replace gaskets. Clean or replace valves as necessary **(See Disassemble and Assemble Control Valve in CHAPTER 3, SECTION 3 in the Rapier Manual)**.
	Worn or damaged clutches.	Repair or replace transmission. **(See Remove and Install Transmission CHAPTER 3, SECTION 1 and CHAPTER 3, SECTION 3 in the Repair Manual)**.
	TCU (A5).	Replace TCU. **(See "Remove and Install Transmission Control Unit" on page 202)**.

Code - Symptom	Problem	Solution
5465 - Oncoming Ratio Test After 6 to 5 Downshift.	Oil level too low or too high.	Add or remove oil to obtain correct level. **(See CHAPTER 1 in the OMM for correct oil specifications).**
DNS, DNA and RPR conditions exists. Transmission service light **ON**.	Turbine speed sensor (B12).	Check resistance of speed sensor. **(See "Transmission Speed Sensors Test" on page 199)**.
	Output speed sensor (B13).	Check resistance of speed sensor. **(See "Transmission Speed Sensors Test" on page 199)**.
	Wiring or connections.	Check transmission control harness (W12) and transmission harness (W13). Check internal transmission harness. **(See Disassemble and Assemble Control Valve in CHAPTER 3, SECTION 3 in the Rapier Manual)**.
	Damaged valve body gaskets or stuck (or sticky) valves.	Replace gaskets. Clean or replace valves as necessary **(See Disassemble and Assemble Control Valve in CHAPTER 3, SECTION 3 in the Rapier Manual)**.
	Worn or damaged clutches.	Repair or replace transmission. **(See Remove and Install Transmission CHAPTER 3, SECTION 1 and CHAPTER 3, SECTION 3 in the Repair Manual)**.
	TCU (A5).	Replace TCU. **(See "Remove and Install Transmission Control Unit" on page 202)**.

Code - Symptom	Problem	Solution
5471 - Oncoming Ratio Test After R to 1 Shift.	Oil level too low or too high.	Add or remove oil to obtain correct level. **(See CHAPTER 1 in the OMM for correct oil specifications).**
DNS, DNA and NNC conditions exists. Transmission service light **ON**.	Turbine speed sensor (B12).	Check resistance of speed sensor. **(See "Transmission Speed Sensors Test" on page 199)**.
	Output speed sensor (B13).	Check resistance of speed sensor. **(See "Transmission Speed Sensors Test" on page 199)**.
	Wiring or connections.	Check transmission control harness (W12) and transmission harness (W13). Check internal transmission harness. **(See Disassemble and Assemble Control Valve in CHAPTER 3, SECTION 3 in the Rapier Manual)**.
	Damaged valve body gaskets or stuck (or sticky) valves.	Replace gaskets. Clean or replace valves as necessary **(See Disassemble and Assemble Control Valve in CHAPTER 3, SECTION 3 in the Rapier Manual)**.
	Worn or damaged clutches.	Repair or replace transmission. **(See Remove and Install Transmission CHAPTER 3, SECTION 1 and CHAPTER 3, SECTION 3 in the Repair Manual)**.
	TCU (A5).	Replace TCU. **(See "Remove and Install Transmission Control Unit" on page 202)**.

Code - Symptom	Problem	Solution
5471 - Oncoming Ratio Test After R to 2 Shift.	Oil level too low or too high.	Add or remove oil to obtain correct level. **(See CHAPTER 1 in the OMM for correct oil specifications).**
DNS, DNA and NNC conditions exists. Transmission service light **ON**.	Turbine speed sensor (B12).	Check resistance of speed sensor. **(See "Transmission Speed Sensors Test" on page 199)**.
	Output speed sensor (B13).	Check resistance of speed sensor. **(See "Transmission Speed Sensors Test" on page 199)**.
	Wiring or connections.	Check transmission control harness (W12) and transmission harness (W13). Check internal transmission harness. **(See Disassemble and Assemble Control Valve in CHAPTER 3, SECTION 3 in the Rapier Manual)**.
	Damaged valve body gaskets or stuck (or sticky) valves.	Replace gaskets. Clean or replace valves as necessary **(See Disassemble and Assemble Control Valve in CHAPTER 3, SECTION 3 in the Rapier Manual)**.
	Worn or damaged clutches.	Repair or replace transmission. **(See Remove and Install Transmission CHAPTER 3, SECTION 1 and CHAPTER 3, SECTION 3 in the Repair Manual)**.
	TCU (A5).	Replace TCU. **(See "Remove and Install Transmission Control Unit" on page 202)**.

Code - Symptom	Problem	Solution
5481 - Oncoming Ratio Test After N1 to 1 Shift.	Oil level too low or too high.	Add or remove oil to obtain correct level. **(See CHAPTER 1 in the OMM for correct oil specifications).**
DNS, DNA and RPR conditions exists. Transmission service light **ON**.	Turbine speed sensor (B12).	Check resistance of speed sensor. **(See "Transmission Speed Sensors Test" on page 199)**.
	Output speed sensor (B13).	Check resistance of speed sensor. **(See "Transmission Speed Sensors Test" on page 199)**.
	Wiring or connections.	Check transmission control harness (W12) and transmission harness (W13). Check internal transmission harness. **(See Disassemble and Assemble Control Valve in CHAPTER 3, SECTION 3 in the Rapier Manual)**.
	Damaged valve body gaskets or stuck (or sticky) valves.	Replace gaskets. Clean or replace valves as necessary **(See Disassemble and Assemble Control Valve in CHAPTER 3, SECTION 3 in the Rapier Manual)**.
	Worn or damaged clutches.	Repair or replace transmission. **(See Remove and Install Transmission CHAPTER 3, SECTION 1 and CHAPTER 3, SECTION 3 in the Repair Manual)**.
	TCU (A5).	Replace TCU. **(See "Remove and Install Transmission Control Unit" on page 202)**.

Code - Symptom	Problem	Solution
5482 - Oncoming Ratio Test After N1 to 2 Shift.	Oil level too low or too high.	Add or remove oil to obtain correct level. **(See CHAPTER 1 in the OMM for correct oil specifications).**
DNS, DNA and RPR conditions exists. Transmission service light **ON**.	Turbine speed sensor (B12).	Check resistance of speed sensor. **(See "Transmission Speed Sensors Test" on page 199)**.
	Output speed sensor (B13).	Check resistance of speed sensor. **(See "Transmission Speed Sensors Test" on page 199)**.
	Wiring or connections.	Check transmission control harness (W12) and transmission harness (W13). Check internal transmission harness. **(See Disassemble and Assemble Control Valve in CHAPTER 3, SECTION 3 in the Rapier Manual)**.
	Damaged valve body gaskets or stuck (or sticky) valves.	Replace gaskets. Clean or replace valves as necessary **(See Disassemble and Assemble Control Valve in CHAPTER 3, SECTION 3 in the Rapier Manual)**.
	Worn or damaged clutches.	Repair or replace transmission. **(See Remove and Install Transmission CHAPTER 3, SECTION 1 and CHAPTER 3, SECTION 3 in the Repair Manual)**.
	TCU (A5).	Replace TCU. **(See "Remove and Install Transmission Control Unit" on page 202)**.

Code - Symptom	Problem	Solution
5483 - Oncoming Ratio Test After N1 to 3 Shift.	Oil level too low or too high.	Add or remove oil to obtain correct level. **(See CHAPTER 1 in the OMM for correct oil specifications).**
DNS, DNA and RPR conditions exists. Transmission service light **ON**.	Turbine speed sensor (B12).	Check resistance of speed sensor. **(See "Transmission Speed Sensors Test" on page 199)**.
	Output speed sensor (B13).	Check resistance of speed sensor. **(See "Transmission Speed Sensors Test" on page 199)**.
	Wiring or connections.	Check transmission control harness (W12) and transmission harness (W13). Check internal transmission harness. **(See Disassemble and Assemble Control Valve in CHAPTER 3, SECTION 3 in the Rapier Manual)**.
	Damaged valve body gaskets or stuck (or sticky) valves.	Replace gaskets. Clean or replace valves as necessary **(See Disassemble and Assemble Control Valve in CHAPTER 3, SECTION 3 in the Rapier Manual)**.
	Worn or damaged clutches.	Repair or replace transmission. **(See Remove and Install Transmission CHAPTER 3, SECTION 1 and CHAPTER 3, SECTION 3 in the Repair Manual)**.
	TCU (A5).	Replace TCU. **(See "Remove and Install Transmission Control Unit" on page 202)**.

Code - Symptom	Problem	Solution
5485 - Oncoming Ratio Test After N1 to 5 Shift.	Oil level too low or too high.	Add or remove oil to obtain correct level. **(See CHAPTER 1 in the OMM for correct oil specifications).**
DNS, DNA and RPR conditions exists. Transmission service light **ON**.	Turbine speed sensor (B12).	Check resistance of speed sensor. **(See "Transmission Speed Sensors Test" on page 199)**.
	Output speed sensor (B13).	Check resistance of speed sensor. **(See "Transmission Speed Sensors Test" on page 199)**.
	Wiring or connections.	Check transmission control harness (W12) and transmission harness (W13). Check internal transmission harness. **(See Disassemble and Assemble Control Valve in CHAPTER 3, SECTION 3 in the Rapier Manual)**.
	Damaged valve body gaskets or stuck (or sticky) valves.	Replace gaskets. Clean or replace valves as necessary **(See Disassemble and Assemble Control Valve in CHAPTER 3, SECTION 3 in the Rapier Manual)**.
	Worn or damaged clutches.	Repair or replace transmission. **(See Remove and Install Transmission CHAPTER 3, SECTION 1 and CHAPTER 3, SECTION 3 in the Repair Manual)**.
	TCU (A5).	Replace TCU. **(See "Remove and Install Transmission Control Unit" on page 202)**.

Code - Symptom	Problem	Solution
5486 - Oncoming Ratio Test After N1 to 6 Shift.	Oil level too low or too high.	Add or remove oil to obtain correct level. **(See CHAPTER 1 in the OMM for correct oil specifications).**
DNS, DNA and RPR conditions exists. Transmission service light **ON**.	Turbine speed sensor (B12).	Check resistance of speed sensor. **(See "Transmission Speed Sensors Test" on page 199)**.
	Output speed sensor (B13).	Check resistance of speed sensor. **(See "Transmission Speed Sensors Test" on page 199)**.
	Wiring or connections.	Check transmission control harness (W12) and transmission harness (W13). Check internal transmission harness. **(See Disassemble and Assemble Control Valve in CHAPTER 3, SECTION 3 in the Rapier Manual)**.
	Damaged valve body gaskets or stuck (or sticky) valves.	Replace gaskets. Clean or replace valves as necessary **(See Disassemble and Assemble Control Valve in CHAPTER 3, SECTION 3 in the Rapier Manual)**.
	Worn or damaged clutches.	Repair or replace transmission. **(See Remove and Install Transmission CHAPTER 3, SECTION 1 and CHAPTER 3, SECTION 3 in the Repair Manual)**.
	TCU (A5).	Replace TCU. **(See "Remove and Install Transmission Control Unit" on page 202)**.

Code - Symptom	Problem	Solution
5492 - Oncoming Ratio Test After N2 to 2 Shift.	Oil level too low or too high.	Add or remove oil to obtain correct level. **(See CHAPTER 1 in the OMM for correct oil specifications).**
DNS, DNA and RPR conditions exists. Transmission service light **ON**.	Turbine speed sensor (B12).	Check resistance of speed sensor. **(See "Transmission Speed Sensors Test" on page 199)**.
	Output speed sensor (B13).	Check resistance of speed sensor. **(See "Transmission Speed Sensors Test" on page 199)**.
	Wiring or connections.	Check transmission control harness (W12) and transmission harness (W13). Check internal transmission harness. **(See Disassemble and Assemble Control Valve in CHAPTER 3, SECTION 3 in the Rapier Manual)**.
	Damaged valve body gaskets or stuck (or sticky) valves.	Replace gaskets. Clean or replace valves as necessary **(See Disassemble and Assemble Control Valve in CHAPTER 3, SECTION 3 in the Rapier Manual)**.
	Worn or damaged clutches.	Repair or replace transmission. **(See Remove and Install Transmission CHAPTER 3, SECTION 1 and CHAPTER 3, SECTION 3 in the Repair Manual)**.
	TCU (A5).	Replace TCU. **(See "Remove and Install Transmission Control Unit" on page 202)**.

Code - Symptom	Problem	Solution
5493 - Oncoming Ratio Test After N3 to 3 Shift.	Oil level too low or too high.	Add or remove oil to obtain correct level. **(See CHAPTER 1 in the OMM for correct oil specifications).**
DNS, DNA and RPR conditions exists. Transmission service light **ON**.	Turbine speed sensor (B12).	Check resistance of speed sensor. **(See "Transmission Speed Sensors Test" on page 199)**.
	Output speed sensor (B13).	Check resistance of speed sensor. **(See "Transmission Speed Sensors Test" on page 199)**.
	Wiring or connections.	Check transmission control harness (W12) and transmission harness (W13). Check internal transmission harness. **(See Disassemble and Assemble Control Valve in CHAPTER 3, SECTION 3 in the Rapier Manual)**.
	Damaged valve body gaskets or stuck (or sticky) valves.	Replace gaskets. Clean or replace valves as necessary **(See Disassemble and Assemble Control Valve in CHAPTER 3, SECTION 3 in the Rapier Manual)**.
	Worn or damaged clutches.	Repair or replace transmission. **(See Remove and Install Transmission CHAPTER 3, SECTION 1 and CHAPTER 3, SECTION 3 in the Repair Manual)**.
	TCU (A5).	Replace TCU. **(See "Remove and Install Transmission Control Unit" on page 202)**.

Code - Symptom	Problem	Solution
5495 - Oncoming Ratio Test After N3 to 5 Shift.	Oil level too low or too high.	Add or remove oil to obtain correct level. **(See CHAPTER 1 in the OMM for correct oil specifications).**
DNS, DNA and RPR conditions exists. Transmission service light **ON**.	Turbine speed sensor (B12).	Check resistance of speed sensor. **(See "Transmission Speed Sensors Test" on page 199)**.
	Output speed sensor (B13).	Check resistance of speed sensor. **(See "Transmission Speed Sensors Test" on page 199)**.
	Wiring or connections.	Check transmission control harness (W12) and transmission harness (W13). Check internal transmission harness. **(See Disassemble and Assemble Control Valve in CHAPTER 3, SECTION 3 in the Rapier Manual)**.
	Damaged valve body gaskets or stuck (or sticky) valves.	Replace gaskets. Clean or replace valves as necessary **(See Disassemble and Assemble Control Valve in CHAPTER 3, SECTION 3 in the Rapier Manual)**.
	Worn or damaged clutches.	Repair or replace transmission. **(See Remove and Install Transmission CHAPTER 3, SECTION 1 and CHAPTER 3, SECTION 3 in the Repair Manual)**.
	TCU (A5).	Replace TCU. **(See "Remove and Install Transmission Control Unit" on page 202)**.

Code - Symptom	Problem	Solution
5496 - Oncoming Ratio Test After N4 to 6 Shift. DNS, DNA and RPR conditions exists. Transmission service light **ON**.	Oil level too low or too high.	Add or remove oil to obtain correct level. **(See CHAPTER 1 in the OMM for correct oil specifications).**
	Turbine speed sensor (B12).	Check resistance of speed sensor. **(See "Transmission Speed Sensors Test" on page 199)**.
	Output speed sensor (B13).	Check resistance of speed sensor. **(See "Transmission Speed Sensors Test" on page 199)**.
	Wiring or connections.	Check transmission control harness (W12) and transmission harness (W13). Check internal transmission harness. **(See Disassemble and Assemble Control Valve in CHAPTER 3, SECTION 3 in the Rapier Manual)**.
	Damaged valve body gaskets or stuck (or sticky) valves.	Replace gaskets. Clean or replace valves as necessary **(See Disassemble and Assemble Control Valve in CHAPTER 3, SECTION 3 in the Rapier Manual)**.
	Worn or damaged clutches.	Repair or replace transmission. **(See Remove and Install Transmission CHAPTER 3, SECTION 1 and CHAPTER 3, SECTION 3 in the Repair Manual)**.
	TCU (A5).	Replace TCU. **(See "Remove and Install Transmission Control Unit" on page 202)**.

Code - Symptom	Problem	Solution
54XY - Oncoming Ratio Test After X to Y Shift.	Oil level too low or too high.	Add or remove oil to obtain correct level. **(See CHAPTER 1 in the OMM for correct oil specifications).**
Additional codes could be logged for other shifts where X indicates range shifted from and Y indicates range shifted to.	Turbine speed sensor (B12).	Check resistance of speed sensor. **(See "Transmission Speed Sensors Test" on page 199)**.
	Output speed sensor (B13).	Check resistance of speed sensor. **(See "Transmission Speed Sensors Test" on page 199)**.
	Wiring or connections.	Check transmission control harness (W12) and transmission harness (W13). Check internal transmission harness. **(See Disassemble and Assemble Control Valve in CHAPTER 3, SECTION 3 in the Rapier Manual)**.
	Damaged valve body gaskets or stuck (or sticky) valves.	Replace gaskets. Clean or replace valves as necessary **(See Disassemble and Assemble Control Valve in CHAPTER 3, SECTION 3 in the Rapier Manual)**.
	Worn or damaged clutches.	Repair or replace transmission. **(See Remove and Install Transmission CHAPTER 3, SECTION 1 and CHAPTER 3, SECTION 3 in the Repair Manual)**.
	TCU (A5).	Replace TCU. **(See "Remove and Install Transmission Control Unit" on page 202)**.

Code - Symptom	Problem	Solution
5517 - Oncoming C3PS Test After 1 to R Shift. DNS, DNA and NNC conditions exists. Transmission service light **ON**. This code is logged to real time to protect the transmission in case a loss of power to the TCU (power interruption code 3500) occurs.	Oil level too low or too high.	Add or remove oil to obtain correct level. **(See CHAPTER 1 in the OMM for correct oil specifications).**
	Worn oil pump.	Repair pump. **(See Disassemble and Assemble Front Support and Charging Oil Pump in CHAPTER 3, SECTION 3 in the Repair Manual)**.
	Wiring or connections.	Check transmission control harness (W12) and transmission harness (W13).
	Transmission internal wiring harness or C3 pressure switch.	Repair or replace wiring harness or C3 pressure switch. **(See Disassemble and Assemble Control Valve in CHAPTER 3, SECTION 3 in the Rapier Manual)**.
	Damaged valve body gaskets or stuck (or sticky) valves.	Replace gaskets. Clean or replace valves as necessary **(See Disassemble and Assemble Control Valve in CHAPTER 3, SECTION 3 in the Rapier Manual)**.
	Worn or damaged clutches.	Repair or replace transmission. **(See Remove and Install Transmission CHAPTER 3, SECTION 1 and CHAPTER 3, SECTION 3 in the Repair Manual)**.
	TCU (A5).	Replace TCU. **(See “Remove and Install Transmission Control Unit” on page 202)**.

Code - Symptom	Problem	Solution
5527 - Oncoming C3PS Test After 2 to R Shift. DNS, DNA and NNC conditions exists. Transmission service light **ON**. This code is logged to real time to protect the transmission in case a loss of power to the TCU (power interruption code 3500) occurs.	Oil level too low or too high. Worn oil pump. Wiring or connections. Transmission internal wiring harness or C3 pressure switch. Damaged valve body gaskets or stuck (or sticky) valves. Worn or damaged clutches. TCU (A5).	Add or remove oil to obtain correct level. **(See CHAPTER 1 in the OMM for correct oil specifications).** Repair pump. **(See Disassemble and Assemble Front Support and Charging Oil Pump in CHAPTER 3, SECTION 3 in the Repair Manual)**. Check transmission control harness (W12) and transmission harness (W13). Repair or replace wiring harness or C3 pressure switch. **(See Disassemble and Assemble Control Valve in CHAPTER 3, SECTION 3 in the Rapier Manual)**. Replace gaskets. Clean or replace valves as necessary **(See Disassemble and Assemble Control Valve in CHAPTER 3, SECTION 3 in the Rapier Manual)**. Repair or replace transmission. **(See Remove and Install Transmission CHAPTER 3, SECTION 1 and CHAPTER 3, SECTION 3 in the Repair Manual)**. Replace TCU. **(See “Remove and Install Transmission Control Unit” on page 202)**.

Code - Symptom	Problem	Solution
5587 - Oncoming C3PS Test After N1 to R Shift. DNS, DNA and RPR conditions exists. Transmission service light **ON**.	Oil level too low or too high.	Add or remove oil to obtain correct level. **(See CHAPTER 1 in the OMM for correct oil specifications).**
	Worn oil pump.	Repair pump. **(See Disassemble and Assemble Front Support and Charging Oil Pump in CHAPTER 3, SECTION 3 in the Repair Manual)**.
	Wiring or connections.	Check transmission control harness (W12) and transmission harness (W13).
	Transmission internal wiring harness or C3 pressure switch.	Repair or replace wiring harness or C3 pressure switch. **(See Disassemble and Assemble Control Valve in CHAPTER 3, SECTION 3 in the Rapier Manual)**.
	Damaged valve body gaskets or stuck (or sticky) valves.	Replace gaskets. Clean or replace valves as necessary **(See Disassemble and Assemble Control Valve in CHAPTER 3, SECTION 3 in the Rapier Manual)**.
	Worn or damaged clutches.	Repair or replace transmission. **(See Remove and Install Transmission CHAPTER 3, SECTION 1 and CHAPTER 3, SECTION 3 in the Repair Manual)**.
	TCU (A5).	Replace TCU. **(See “Remove and Install Transmission Control Unit” on page 202)**.

Code - Symptom	Problem	Solution
55XY - Oncoming C3PS Test After X to Y Shift.	Oil level too low or too high.	Add or remove oil to obtain correct level. **(See CHAPTER 1 in the OMM for correct oil specifications).**
Additional codes could be logged for other shifts where X indicates range shifted from and Y indicates range shifted to.	Worn oil pump.	Repair pump. **(See Disassemble and Assemble Front Support and Charging Oil Pump in CHAPTER 3, SECTION 3 in the Repair Manual)**.
	Wiring or connections.	Check transmission control harness (W12) and transmission harness (W13).
	Transmission internal wiring harness or C3 pressure switch.	Repair or replace wiring harness or C3 pressure switch. **(See Disassemble and Assemble Control Valve in CHAPTER 3, SECTION 3 in the Rapier Manual)**.
	Damaged valve body gaskets or stuck (or sticky) valves.	Replace gaskets. Clean or replace valves as necessary **(See Disassemble and Assemble Control Valve in CHAPTER 3, SECTION 3 in the Rapier Manual)**.
	Worn or damaged clutches.	Repair or replace transmission. **(See Remove and Install Transmission CHAPTER 3, SECTION 1 and CHAPTER 3, SECTION 3 in the Repair Manual)**.
	TCU (A5).	Replace TCU. **(See “Remove and Install Transmission Control Unit” on page 202)**.

Code - Symptom	Problem	Solution
5611 - Range Verification Test (Between Shift) (1st Range). DNS, DNA, 6th range conditions exists. Transmission light **ON**.	Oil level too low or too high.	Add or remove oil to obtain correct level. **(See CHAPTER 1 in the OMM for correct oil specifications).**
	Worn oil pump.	Repair pump. **(See Disassemble and Assemble Front Support and Charging Oil Pump in CHAPTER 3, SECTION 3 in the Repair Manual)**.
	Turbine speed sensor (B12).	Check resistance of speed sensor. **(See "Transmission Speed Sensors Test" on page 199)**.
	Output speed sensor (B13).	Check resistance of speed sensor. **(See "Transmission Speed Sensors Test" on page 199)**.
	Wiring or connections.	Check transmission control harness (W12) and transmission harness (W13). Check transmission internal wiring harness. **(See Disassemble and Assemble Control Valve in CHAPTER 3, SECTION 3 in the Rapier Manual)**.
	Damaged valve body gaskets or stuck (or sticky) valves.	Replace gaskets. Clean or replace valves as necessary **(See Disassemble and Assemble Control Valve in CHAPTER 3, SECTION 3 in the Rapier Manual)**.
	Worn or damaged clutches.	Repair or replace transmission. **(See Remove and Install Transmission CHAPTER 3, SECTION 1 and CHAPTER 3, SECTION 3 in the Repair Manual)**.
	TCU (A5).	Replace TCU. **(See "Remove and Install Transmission Control Unit" on page 202)**.

Code - Symptom	Problem	Solution
5622 - Range Verification Test (Between Shift) (2nd Range). DNS, DNA, 5th or 6th range conditions exists. Transmission light **ON**. This code is logged to real time to protect the transmission in case a loss of power to the TCU (power interruption code 3500) occurs.	Oil level too low or too high.	Add or remove oil to obtain correct level. **(See CHAPTER 1 in the OMM for correct oil specifications).**
	Worn oil pump.	Repair pump. **(See Disassemble and Assemble Front Support and Charging Oil Pump in CHAPTER 3, SECTION 3 in the Repair Manual)**.
	Turbine speed sensor (B12).	Check resistance of speed sensor. **(See "Transmission Speed Sensors Test" on page 199)**.
	Output speed sensor (B13).	Check resistance of speed sensor. **(See "Transmission Speed Sensors Test" on page 199)**.
	Wiring or connections.	Check transmission control harness (W12) and transmission harness (W13). Check transmission internal wiring harness. **(See Disassemble and Assemble Control Valve in CHAPTER 3, SECTION 3 in the Rapier Manual)**.
	Damaged valve body gaskets or stuck (or sticky) valves.	Replace gaskets. Clean or replace valves as necessary **(See Disassemble and Assemble Control Valve in CHAPTER 3, SECTION 3 in the Rapier Manual)**.
	Worn or damaged clutches.	Repair or replace transmission. **(See Remove and Install Transmission CHAPTER 3, SECTION 1 and CHAPTER 3, SECTION 3 in the Repair Manual)**.
	TCU (A5).	Replace TCU. **(See "Remove and Install Transmission Control Unit" on page 202)**.

Code - Symptom	Problem	Solution
5633 - Range Verification Test (Between Shift) (3rd Range). DNS, DNA, 5th range or SOL OFF (4th range) conditions exists. Transmission light **ON**. This code is logged to real time to protect the transmission in case a loss of power to the TCU (power interruption code 3500) occurs.	Oil level too low or too high.	Add or remove oil to obtain correct level. **(See CHAPTER 1 in the OMM for correct oil specifications).**
	Worn oil pump.	Repair pump. **(See Disassemble and Assemble Front Support and Charging Oil Pump in CHAPTER 3, SECTION 3 in the Repair Manual)**.
	Turbine speed sensor (B12).	Check resistance of speed sensor. **(See "Transmission Speed Sensors Test" on page 199)**.
	Output speed sensor (B13).	Check resistance of speed sensor. **(See "Transmission Speed Sensors Test" on page 199)**.
	Wiring or connections.	Check transmission control harness (W12) and transmission harness (W13). Check transmission internal wiring harness. **(See Disassemble and Assemble Control Valve in CHAPTER 3, SECTION 3 in the Rapier Manual)**.
	Damaged valve body gaskets or stuck (or sticky) valves.	Replace gaskets. Clean or replace valves as necessary **(See Disassemble and Assemble Control Valve in CHAPTER 3, SECTION 3 in the Rapier Manual)**.
	Worn or damaged clutches.	Repair or replace transmission. **(See Remove and Install Transmission CHAPTER 3, SECTION 1 and CHAPTER 3, SECTION 3 in the Repair Manual)**.
	TCU (A5).	Replace TCU. **(See "Remove and Install Transmission Control Unit" on page 202)**.

Code - Symptom	Problem	Solution
5644 - Range Verification Test (Between Shift) (4th Range). DNS, DNA, 3rd or 5th range conditions exists. Transmission light **ON**.	Oil level too low or too high.	Add or remove oil to obtain correct level. **(See CHAPTER 1 in the OMM for correct oil specifications).**
	Worn oil pump.	Repair pump. **(See Disassemble and Assemble Front Support and Charging Oil Pump in CHAPTER 3, SECTION 3 in the Repair Manual)**.
	Turbine speed sensor (B12).	Check resistance of speed sensor. **(See "Transmission Speed Sensors Test" on page 199)**.
	Output speed sensor (B13).	Check resistance of speed sensor. **(See "Transmission Speed Sensors Test" on page 199)**.
	Wiring or connections.	Check transmission control harness (W12) and transmission harness (W13). Check transmission internal wiring harness. **(See Disassemble and Assemble Control Valve in CHAPTER 3, SECTION 3 in the Rapier Manual)**.
	Damaged valve body gaskets or stuck (or sticky) valves.	Replace gaskets. Clean or replace valves as necessary **(See Disassemble and Assemble Control Valve in CHAPTER 3, SECTION 3 in the Rapier Manual)**.
	Worn or damaged clutches.	Repair or replace transmission. **(See Remove and Install Transmission CHAPTER 3, SECTION 1 and CHAPTER 3, SECTION 3 in the Repair Manual)**.
	TCU (A5).	Replace TCU. **(See "Remove and Install Transmission Control Unit" on page 202)**.

Code - Symptom	Problem	Solution
5655 - Range Verification Test (Between Shift) (5th Range). DNS, DNA, 3rd range or SOL OFF (5th range) conditions exists. Transmission light **ON**. This code is logged to real time to protect the transmission in case a loss of power to the TCU (power interruption code 3500) occurs.	Oil level too low or too high.	Add or remove oil to obtain correct level. **(See CHAPTER 1 in the OMM for correct oil specifications).**
	Worn oil pump.	Repair pump. **(See Disassemble and Assemble Front Support and Charging Oil Pump in CHAPTER 3, SECTION 3 in the Repair Manual)**.
	Turbine speed sensor (B12).	Check resistance of speed sensor. **(See "Transmission Speed Sensors Test" on page 199)**.
	Output speed sensor (B13).	Check resistance of speed sensor. **(See "Transmission Speed Sensors Test" on page 199)**.
	Wiring or connections.	Check transmission control harness (W12) and transmission harness (W13). Check transmission internal wiring harness. **(See Disassemble and Assemble Control Valve in CHAPTER 3, SECTION 3 in the Rapier Manual)**.
	Damaged valve body gaskets or stuck (or sticky) valves.	Replace gaskets. Clean or replace valves as necessary **(See Disassemble and Assemble Control Valve in CHAPTER 3, SECTION 3 in the Rapier Manual)**.
	Worn or damaged clutches.	Repair or replace transmission. **(See Remove and Install Transmission CHAPTER 3, SECTION 1 and CHAPTER 3, SECTION 3 in the Repair Manual)**.
	TCU (A5).	Replace TCU. **(See "Remove and Install Transmission Control Unit" on page 202)**.

Code - Symptom	Problem	Solution
5666 - Range Verification Test (Between Shift) (6th Range). DNS, DNA, 3rd, 5th range or SOL OFF (3rd range) conditions exists. Transmission light **ON**.	Oil level too low or too high.	Add or remove oil to obtain correct level. **(See CHAPTER 1 in the OMM for correct oil specifications).**
	Worn oil pump.	Repair pump. **(See Disassemble and Assemble Front Support and Charging Oil Pump in CHAPTER 3, SECTION 3 in the Repair Manual)**.
	Turbine speed sensor (B12).	Check resistance of speed sensor. **(See "Transmission Speed Sensors Test" on page 199)**.
	Output speed sensor (B13).	Check resistance of speed sensor. **(See "Transmission Speed Sensors Test" on page 199)**.
	Wiring or connections.	Check transmission control harness (W12) and transmission harness (W13). Check transmission internal wiring harness. **(See Disassemble and Assemble Control Valve in CHAPTER 3, SECTION 3 in the Rapier Manual)**.
	Damaged valve body gaskets or stuck (or sticky) valves.	Replace gaskets. Clean or replace valves as necessary **(See Disassemble and Assemble Control Valve in CHAPTER 3, SECTION 3 in the Rapier Manual)**.
	Worn or damaged clutches.	Repair or replace transmission. **(See Remove and Install Transmission CHAPTER 3, SECTION 1 and CHAPTER 3, SECTION 3 in the Repair Manual)**.
	TCU (A5).	Replace TCU. **(See "Remove and Install Transmission Control Unit" on page 202)**.

Code - Symptom	Problem	Solution
5677 - Range Verification Test (Between Shift) (Reverse). DNS, DNA, N2 or N3 conditions exists. Transmission light **ON**.	Oil level too low or too high.	Add or remove oil to obtain correct level. **(See CHAPTER 1 in the OMM for correct oil specifications).**
	Worn oil pump.	Repair pump. **(See Disassemble and Assemble Front Support and Charging Oil Pump in CHAPTER 3, SECTION 3 in the Repair Manual)**.
	Turbine speed sensor (B12).	Check resistance of speed sensor. **(See "Transmission Speed Sensors Test" on page 199)**.
	Output speed sensor (B13).	Check resistance of speed sensor. **(See "Transmission Speed Sensors Test" on page 199)**.
	Wiring or connections.	Check transmission control harness (W12) and transmission harness (W13). Check transmission internal wiring harness. **(See Disassemble and Assemble Control Valve in CHAPTER 3, SECTION 3 in the Rapier Manual)**.
	Damaged valve body gaskets or stuck (or sticky) valves.	Replace gaskets. Clean or replace valves as necessary **(See Disassemble and Assemble Control Valve in CHAPTER 3, SECTION 3 in the Rapier Manual)**.
	Worn or damaged clutches.	Repair or replace transmission. **(See Remove and Install Transmission CHAPTER 3, SECTION 1 and CHAPTER 3, SECTION 3 in the Repair Manual)**.
	TCU (A5).	Replace TCU. **(See "Remove and Install Transmission Control Unit" on page 202)**.

Code - Symptom	Problem	Solution
5711 - Range Verification C3PS Test (3rd Range). DNS, DNA, SOL OFF (3rd range) conditions exists. Transmission light **ON**.	Wiring or connections. Transmission internal wiring harness or C3 pressure switch. Damaged valve body gaskets or stuck (or sticky) valves. Worn or damaged clutches. TCU (A5).	Check transmission control harness (W12) and transmission harness (W13). Repair or replace wiring harness or C3 pressure switch. **(See Disassemble and Assemble Control Valve in CHAPTER 3, SECTION 3 in the Rapier Manual)**. Replace gaskets. Clean or replace valves as necessary **(See Disassemble and Assemble Control Valve in CHAPTER 3, SECTION 3 in the Rapier Manual)**. Repair or replace transmission. **(See Remove and Install Transmission CHAPTER 3, SECTION 1 and CHAPTER 3, SECTION 3 in the Repair Manual)**. Replace TCU. **(See "Remove and Install Transmission Control Unit" on page 202)**.
5722 - Range Verification C3PS Test (2nd Range). DNS, DNA, 3rd range conditions exists. Transmission light **ON**.	Wiring or connections. Transmission internal wiring harness or C3 pressure switch. Damaged valve body gaskets or stuck (or sticky) valves. Worn or damaged clutches. TCU (A5).	Check transmission control harness (W12) and transmission harness (W13). Repair or replace wiring harness or C3 pressure switch. **(See Disassemble and Assemble Control Valve in CHAPTER 3, SECTION 3 in the Rapier Manual)**. Replace gaskets. Clean or replace valves as necessary **(See Disassemble and Assemble Control Valve in CHAPTER 3, SECTION 3 in the Rapier Manual)**. Repair or replace transmission. **(See Remove and Install Transmission CHAPTER 3, SECTION 1 and CHAPTER 3, SECTION 3 in the Repair Manual)**. Replace TCU. **(See "Remove and Install Transmission Control Unit" on page 202)**.

Code - Symptom	Problem	Solution
5744 - Range Verification C3PS Test (4th Range). DNS, DNA, 5th range, or SOL OFF (3rd range) conditions exists. Transmission light **ON**.	Wiring or connections. Transmission internal wiring harness or C3 pressure switch. Damaged valve body gaskets or stuck (or sticky) valves. Worn or damaged clutches. TCU (A5).	Check transmission control harness (W12) and transmission harness (W13). Repair or replace wiring harness or C3 pressure switch. **(See Disassemble and Assemble Control Valve in CHAPTER 3, SECTION 3 in the Rapier Manual)**. Replace gaskets. Clean or replace valves as necessary **(See Disassemble and Assemble Control Valve in CHAPTER 3, SECTION 3 in the Rapier Manual)**. Repair or replace transmission. **(See Remove and Install Transmission CHAPTER 3, SECTION 1 and CHAPTER 3, SECTION 3 in the Repair Manual)**. Replace TCU. **(See "Remove and Install Transmission Control Unit" on page 202)**.
5766 - Range Verification C3PS Test (6th Range). DNS, DNA, SOL OFF (5th range) conditions exists. Transmission light **ON**.	Wiring or connections. Transmission internal wiring harness or C3 pressure switch. Damaged valve body gaskets or stuck (or sticky) valves. Worn or damaged clutches. TCU (A5).	Check transmission control harness (W12) and transmission harness (W13). Repair or replace wiring harness or C3 pressure switch. **(See Disassemble and Assemble Control Valve in CHAPTER 3, SECTION 3 in the Rapier Manual)**. Replace gaskets. Clean or replace valves as necessary **(See Disassemble and Assemble Control Valve in CHAPTER 3, SECTION 3 in the Rapier Manual)**. Repair or replace transmission. **(See Remove and Install Transmission CHAPTER 3, SECTION 1 and CHAPTER 3, SECTION 3 in the Repair Manual)**. Replace TCU. **(See "Remove and Install Transmission Control Unit" on page 202)**.

Code - Symptom	Problem	Solution
5788 - Range Verification C3PS Test (N1). DNS, DNA, N3 conditions exists. Transmission light **ON**.	Wiring or connections.	Check transmission control harness (W12) and transmission harness (W13).
	Transmission internal wiring harness or C3 pressure switch.	Repair or replace wiring harness or C3 pressure switch. **(See Disassemble and Assemble Control Valve in CHAPTER 3, SECTION 3 in the Rapier Manual)**.
	Damaged valve body gaskets or stuck (or sticky) valves.	Replace gaskets. Clean or replace valves as necessary **(See Disassemble and Assemble Control Valve in CHAPTER 3, SECTION 3 in the Rapier Manual)**.
	Worn or damaged clutches.	Repair or replace transmission. **(See Remove and Install Transmission CHAPTER 3, SECTION 1 and CHAPTER 3, SECTION 3 in the Repair Manual)**.
	TCU (A5).	Replace TCU. **(See "Remove and Install Transmission Control Unit" on page 202)**.
5799 - Range Verification C3PS Test (N2 or N4). DNS, DNA, N3 conditions exists. Transmission light **ON**.	Wiring or connections.	Check transmission control harness (W12) and transmission harness (W13).
	Transmission internal wiring harness or C3 pressure switch.	Repair or replace wiring harness or C3 pressure switch. **(See Disassemble and Assemble Control Valve in CHAPTER 3, SECTION 3 in the Rapier Manual)**.
	Damaged valve body gaskets or stuck (or sticky) valves.	Replace gaskets. Clean or replace valves as necessary **(See Disassemble and Assemble Control Valve in CHAPTER 3, SECTION 3 in the Rapier Manual)**.
	Worn or damaged clutches.	Repair or replace transmission. **(See Remove and Install Transmission CHAPTER 3, SECTION 1 and CHAPTER 3, SECTION 3 in the Repair Manual)**.
	TCU (A5).	Replace TCU. **(See "Remove and Install Transmission Control Unit" on page 202)**.
6100 - Retarder Oil Temperature is Hot	Prolonged retarder use.	Allow transmission oil to cool down.

Temperature is Hot. No conditions exists. Transmission service light **OFF.**	Oil level too low or too high.	Add or drain oil to obtain correct level. **(See CHAPTER 1 in OMM for correct oil specifications).**

Code - Symptom	Problem	Solution
6212 - Retarder Oil Temperature Sensor Circuit Malfunction Low. No conditions exists. Transmission service light **OFF.**	Wiring or connections. Retarder temperature sensor (B11). TCU (A5).	Check transmission control harness (W12) and transmission harness (W13). Replace sensor. Replace TCU. **(See "Remove and Install Transmission Control Unit" on page 202)**.
6223 - Retarder Oil Temperature Sensor Circuit Malfunction High. No conditions exists. Transmission service light **OFF.**	Wiring or connections. Retarder temperature sensor (B11). TCU (A5).	Check transmission control harness (W12) and transmission harness (W13). Replace sensor. Replace TCU. **(See "Remove and Install Transmission Control Unit" on page 202)**.
6412 - Retarder Modulation Request Sensor Circuit Malfunction Low (14 Counts or Less). Retarder operation inhibited. Transmission service light **OFF.**	Retarder controller (A7). Retarder voltage regulator (N1). Wiring or connections. TCU (A5).	Replace retarder controller. Check voltage regulator. **(See "Retarder Voltage Regulator Test" on page 198)**. Check transmission control harness (W12) and transmission harness (W13). Replace TCU. **(See "Remove and Install Transmission Control Unit" on page 202)**.
6423 - Retarder Modulation Request Sensor Circuit Malfunction Low (14 Counts or Less). Retarder operation inhibited. Transmission service light **OFF.**	Retarder controller (A7). Retarder voltage regulator (N1). Wiring or connections. TCU (A5).	Replace retarder controller. Check voltage regulator. **(See "Retarder Voltage Regulator Test" on page 198)**. Check transmission control harness (W12) and transmission harness (W13). Replace TCU. **(See "Remove and Install Transmission Control Unit" on page 202)**.
6500 - Engine Speed Rating Too High. DNS and locked-in-neutral conditions	Engine governed speed specification does not match transmission.	Calibrate engine speed to transmission.

neutral conditions exists. Transmission service light **ON**.		

Code - Symptom	Problem	Solution
6927 - TCU A-HI Switch Inoperative. DNS, DNA, NNC conditions exists. Transmission service light **ON**.	Wiring or connections. Transmission internal wiring or malfunctioning solenoid. TCU (A5).	Check transmission control harness (W12) and transmission harness (W13). Replace transmission harness or solenoid. **(See Disassemble and Assemble Control Valve in CHAPTER 3, SECTION 3 in the Rapier Manual)**. Replace TCU. **(See "Remove and Install Transmission Control Unit" on page 202)**.
6928 - TCU A-HI Switch Inoperative. DNA and lockup inhibited conditions exists. Transmission service light **ON**.	Wiring or connections. Transmission internal wiring or malfunctioning solenoid. TCU (A5).	Check transmission control harness (W12) and transmission harness (W13). Replace transmission harness or solenoid. **(See Disassemble and Assemble Control Valve in CHAPTER 3, SECTION 3 in the Rapier Manual)**. Replace TCU. **(See "Remove and Install Transmission Control Unit" on page 202)**.
6929 - TCU A-HI Switch Inoperative. DNA, 1st and retarder inhibited conditions exists. Transmission service light **ON**.	Wiring or connections. Transmission internal wiring or malfunctioning solenoid. TCU (A5).	Check transmission control harness (W12) and transmission harness (W13). Replace transmission harness or solenoid. **(See Disassemble and Assemble Control Valve in CHAPTER 3, SECTION 3 in the Rapier Manual)**. Replace TCU. **(See "Remove and Install Transmission Control Unit" on page 202)**.
6933 - TCU "Computer Operating Properly" Function Times Out. Reset TCU, shutdown TCU on 2nd occurrence (power loss; hydraulic defaults). DNA (COP reset will clear the active inhibit). May cause cateye (-/-) display or all segments	TCU (A5).	Replace TCU. **(See "Remove and Install Transmission Control Unit" on page 202)**.

blank display. Transmission service light **OFF.**		

Code - Symptom	Problem	Solution
6934 - TCU Write Function Times Out. DNS, DNA, SOL OFF (hydraulic default) conditions exists. Transmission service light **ON**.	TCU (A5).	Replace TCU. **(See "Remove and Install Transmission Control Unit" on page 202)**.
6935 - TCU Checksum Test Induce COP time out (reset TCU), DNA (COP reset will clear the active inhibit). Transmission service light **OFF**.	TCU (A5).	Replace TCU. **(See "Remove and Install Transmission Control Unit" on page 202)**.
6936 - TCU RAM Self-Test Malfunction. Induce COP time out (reset TCU), DNA (COP reset will clear the active inhibit). Transmission service light **OFF**.	TCU (A5).	Replace TCU. **(See "Remove and Install Transmission Control Unit" on page 202)**.
6939 - Communication Chip Addressing Error. Use defaults for J1939 data, DNA. Transmission service light **OFF**.	TCU (A5).	Replace TCU. **(See "Remove and Install Transmission Control Unit" on page 202)**.
6941 - TCU I/O ASCIC Addressing Test. Induce COP time out (reset TCU), DNA (COP reset will clear the active inhibit).	TCU (A5).	Replace TCU. **(See "Remove and Install Transmission Control Unit" on page 202)**.

Transmission service light **OFF**.		

Code - Symptom	Problem	Solution
6942 - Serial Peripheral Interface (SPI) Output Malfunction. GPO 1-8 and reverse warning inoperable. Transmission service light **ON**.	TCU (A5).	Replace TCU. **(See "Remove and Install Transmission Control Unit" on page 202)**.
6943 - Serial Peripheral Interface (SPI) Input Malfunction. DNS, DNA, locked-in-range conditions exists. Transmission service light **ON**.	TCU (A5).	Replace TCU. **(See "Remove and Install Transmission Control Unit" on page 202)**.

Key Switch Test

Key Switch Terminals

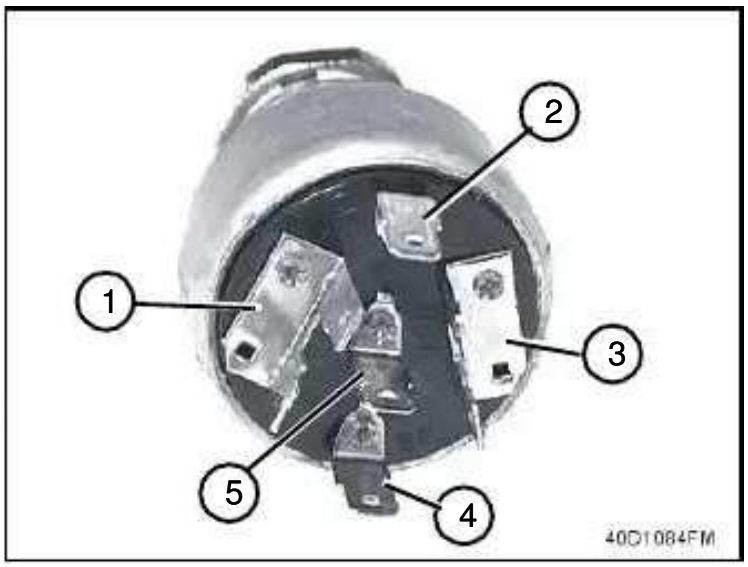

1. ACC
2. GRD
3. GN
4. BAT (B)
5. ST

Remove key switch.

With key switch in the **OFF** position, check for continuity across all terminals (1—5). If continuity is indicated, replace switch.

Position	B	ACC	IG	ST
ACC	●	●		
OFF				
ON	●	●	●	
START	●		●	●

Put key switch in each position (ACC, ON, START) and check for continuity across appropriate terminals (see legend). Replace key switch if continuity is not indicated between terminals as shown in legend.

Relay Test

Remove relay.

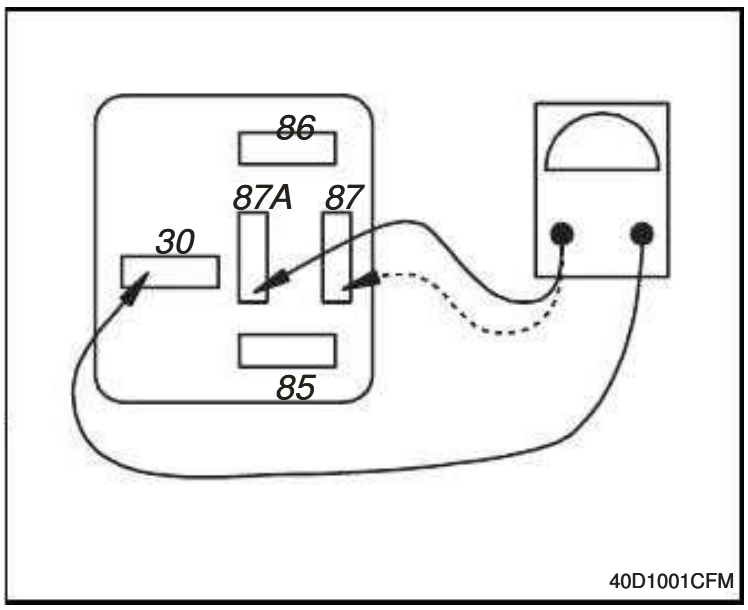

With relay de-energized, check for continuity across terminals 30, 87A and 87, as shown. Replace relay if checks indicated the following:

- • No continuity across terminals 30 and 87A.
- • Continuity exists across terminals 30 and 87.

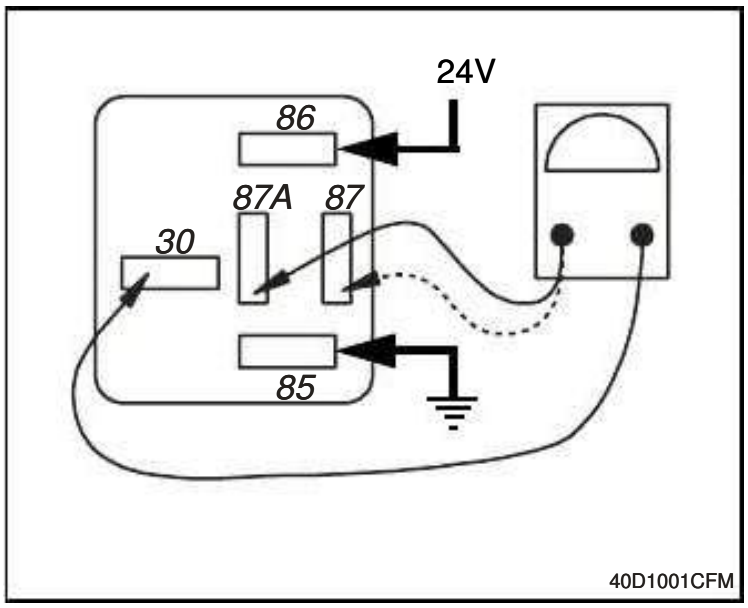

Energize relay by grounding terminal 85 and applying 24 volts to terminal 86.

With relay energized, check for continuity across terminals 30, 87A and 87 as shown. Replace

terminals 30, 87A and 87 as shown. Replace relay if checks indicated the following:

- • No continuity across terminals 30 and 87
- • Continuity exists across terminals 30 and 87A.

Diode Test

Remove diode.

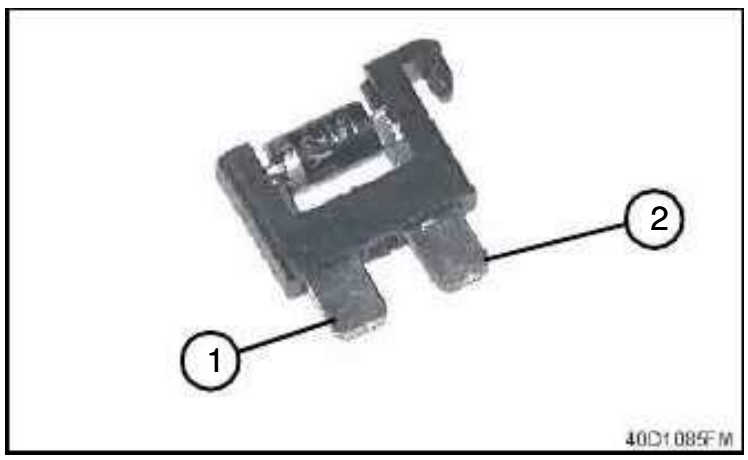

Check for continuity across terminals (1 and 2), then reverse test leads and repeat continuity check.

- If continuity is indicated in one check and not the other, diode is good.
- If continuity is indicated in both checks, diode is shorted, replace diode.
- If no continuity is indicated in either check, diode is open, replace diode.

Pneumatic System Solenoids, Pressure Switches, and Sensor Tests

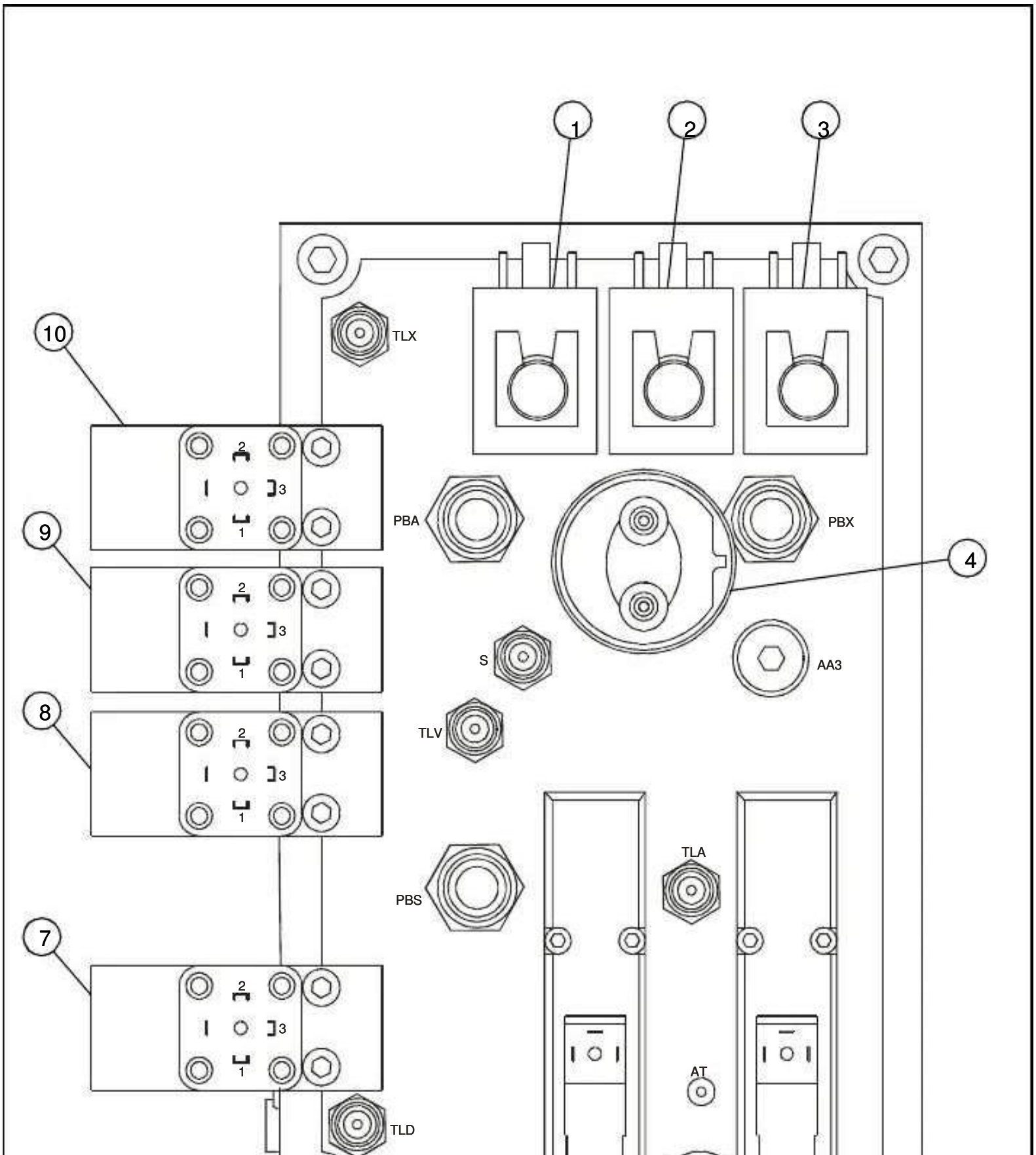

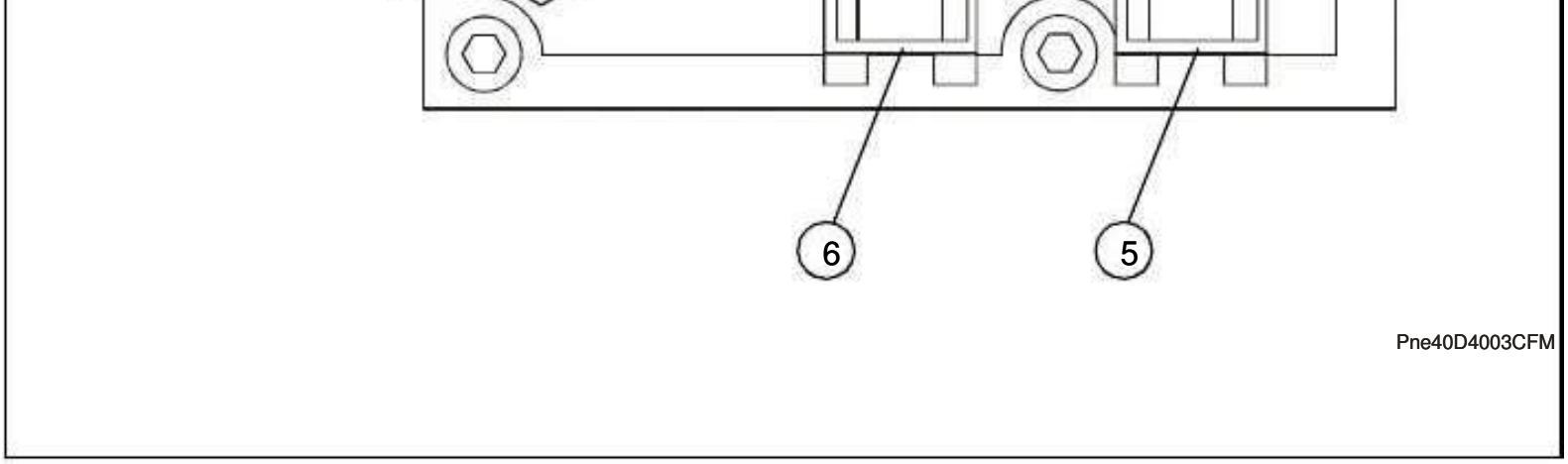

1. Differential Lock Solenoid.
2. Inter-Axle Lock Solenoid.
3. Horn Solenoid.
4. System Air Pressure Sensor.
5. Exhaust Brake Solenoid.
6. Park Brake Solenoid.
7. Park Brake Pressure Switch.
8. Bin Up Pressure Switch.
9. Inter-Axle Lock Pressure Switch.
10. Differential Lock Pressure Switch.

Specifications

Pneumatic Pressure Switches

Bin Up Pressure Switch (B16) Pressure - Contacts are closed at and below 550 kPa (5.5 bar) (79.8 psi)

Park Brake Pressure Switch (B18) Pressure- Contacts are closed at and above 550 kPa (5.5 bar) (79.8 psi)

Inter-Axle Lock Pressure Switch (B25) Pressure - Contacts are closed at and above 550 kPa (5.5 bar) (79.8 psi)

Differential Lock Pressure Switch (B26) Pressure - Contacts are closed at and above 550 kPa (5.5 bar) (79.8 psi)

System Air Pressure Sensor

Air Pressure at 0 kPa (0 bar) (0 psi) Resistance
- 10 Ohms

Air Pressure at 200 kPa (2 bar) (29 psi) Resistance
- 51 Ohms

Air Pressure at 400 kPa (4 bar) (58 psi) Resistance
- 86 Ohms

Air Pressure at 600 kPa (6 bar) (87 psi) Resistance
- 122 Ohms

Air Pressure at 800 kPa (8 bar) (116 psi) Resistance

- 152 Ohms

Air Pressure at 1000 kPa (10 bar) (145 psi) Resistance
180 Ohms

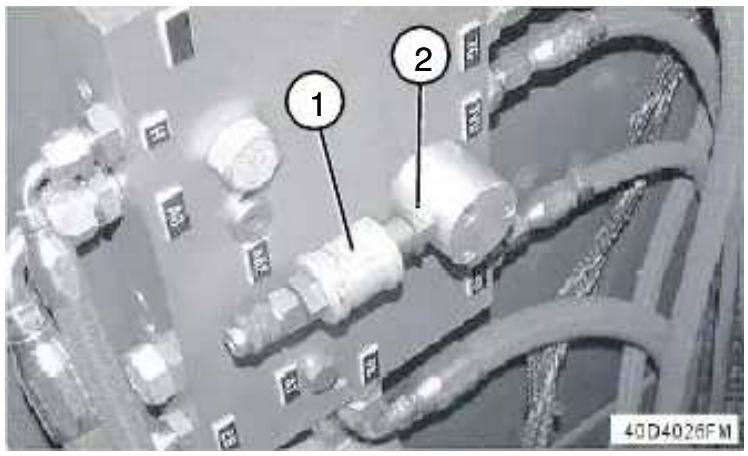

The following tests require a regulated air source applied to port (2). To do this, remove the existing

Pneumatic Pressure Switches (B16, B18, B25, B26) Test

Disconnect wire harness connector from pressure switch to be tested.

NOTE: 1. Body up pressure switch (B16) uses the normally closed contacts.
2. Park brake pressure switch (B18), inter-axle lock pressure switch (B25), and differential lock pressure switch (B26) use the normally open contacts.

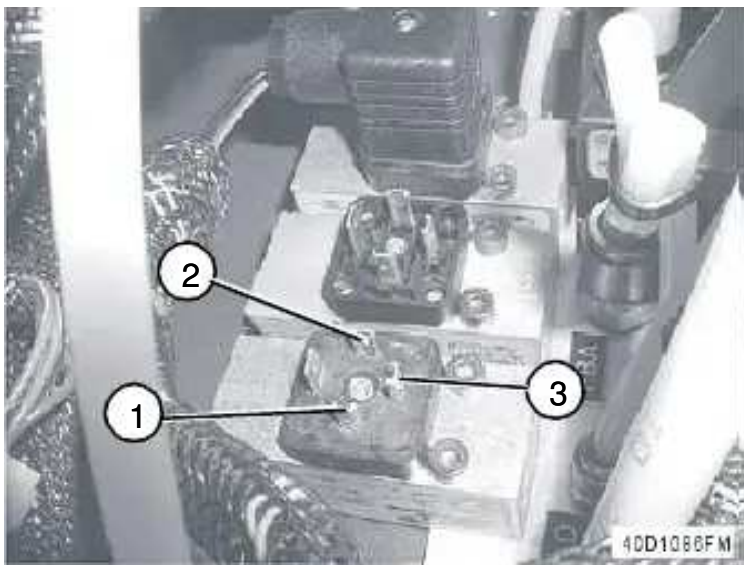

coupler assembly (1).

Install an appropriate coupler using a 1/4 NPT adapter and attach a regulated air supply to the newly installed coupler.

With no air pressure applied to pressure switch, continuity must exist across terminals (1 and 2), but continuity must **NOT** exist across terminals (1 and 3).

NOTE: Before performing this part of the continuity check, make sure the related pneumatic solenoid and the pneumatic system is functioning properly.

Apply 550 kPa (5.5 bar) (79.8 psi) air pressure to the external port of the pneumatic manifold, then perform the following:

- For body up pressure switch (B16), move and hold body up control lever in the RAISE position.

⚠ CAUTION

Chock wheels to prevent vehicle from moving. Park brake may disengage when performing this test.

- For park brake pressure switch (B18), turn key switch to **ON** position, then move park brake lever to the **DISENGAGE** position.
- For inter-axle lock pressure switch (B25), turn key switch to **ON** position, then push inter-axle lock switch to the **ENGAGE** position.

For differential lock pressure switch (B26), turn key switch to **ON** position, then push differential lock pressure switch to the **ENGAGE** position. The differential lock circuit will energize for 30 seconds then will automatically deactivate.

With air pressure applied to pressure switch, continuity must **NOT** exist across terminals (1 and 2), but continuity must exist across terminals (1 and 3).

System Air Pressure Sensor (B15) Test

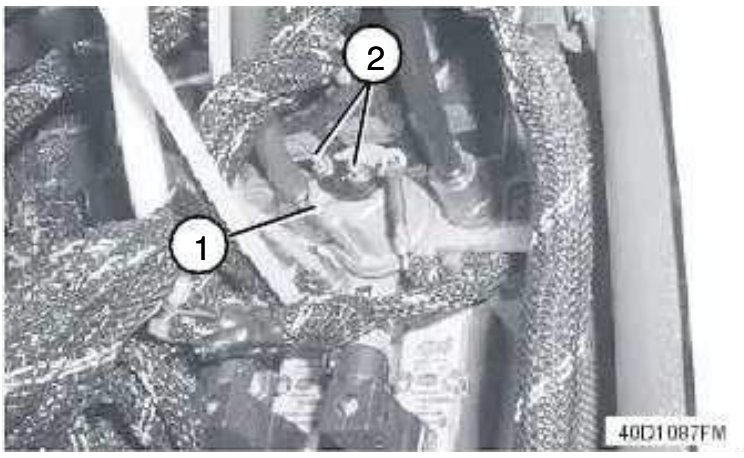

Apply specified air pressure to sensor (at external port of manifold) while checking resistance across

Pneumatic Solenoid Test

Disconnect wire harness from solenoid.

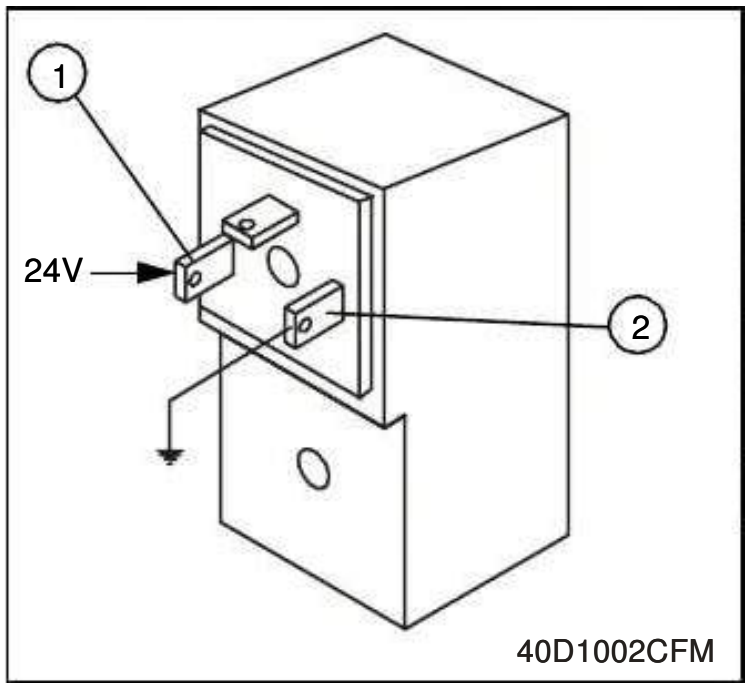

Apply 24 volts across solenoid terminals (1 and 2).

Replace solenoid if solenoid does not click when voltage is applied.

Hydraulic Pressure Switches Test

Specifications

Service Brake Low Pressure Switch (B23) Pressure
- - - - - - - - - - - - - - - Contacts are closed at and above
- - - - - - - - - - - - - - - 11 000 kPa (110 bar) (1595.4 psi)

Secondary Steering Pressure Switch (B24) Pressure
- - - - - - - - - - - - - - - Contacts are closed at and above
- 500 kPa (5 bar) (72.5 psi)

Stop Light Pressure Switch (B27) Pressure
- - - - - - - - - - - - - - - Contacts are closed at and above
- 600 kPa (6 bar) (87 psi)

Remove pressure switch.

NOTE: 1. The normally closed contacts are used on service brake low pressure (B23) and secondary steering pressure (B24).
2. The stop light pressure switch (B27) is a normally open switch.

sensor terminals. Replace sensor if not to specification.

With no pressure applied to pressure switch, check for continuity across the switch terminals.

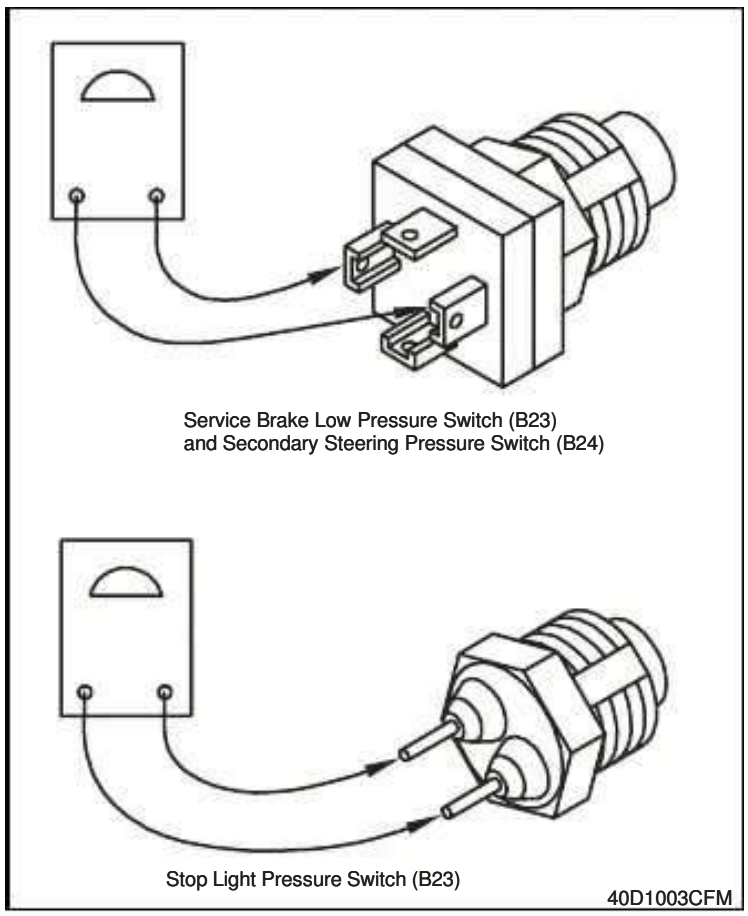

- For service brake low pressure switch (B23) and secondary steering pressure switch (B24), replace switch if no continuity is indicated.
- For stop light pressure switch (B27), replace switch if continuity is indicated.

Apply specified pressure to switch while checking for continuity across the switch terminals.

- For service brake low pressure switch (B23) and secondary steering pressure switch (B24), replace switch if continuity is indicated.
- For stop light pressure switch (B27), replace switch if no continuity is indicated.

Hydraulic Temperature Sensors Test

NOTE: This test applies to both the Hydraulic Temperature Sensor (B21) and Wet Brake Temperature Sensor (B22).

Specification

Temperature at 40°C (104°F) - Resistance
- 287.4 Ohms

Temperature at 50°C (122°F) - Resistance
- 193.6 Ohms

Temperature at 60°C (140°F) - Resistance
- 134 Ohms

Temperature at 70°C (158°F) - Resistance
- 92.5 Ohms

Temperature at 80°C (176°F) - Resistance
- 69.1 Ohms

Temperature at 90°C (194°F) - Resistance
- 51.3 Ohms

Temperature at 100°C (212°F) - Resistance
- 38.6 Ohms

Temperature at 110°C (230°F) - Resistance
- 29.4 Ohms

Temperature at 120°C (248°F) - Resistance
- 22.7 Ohms

Remove sensor.

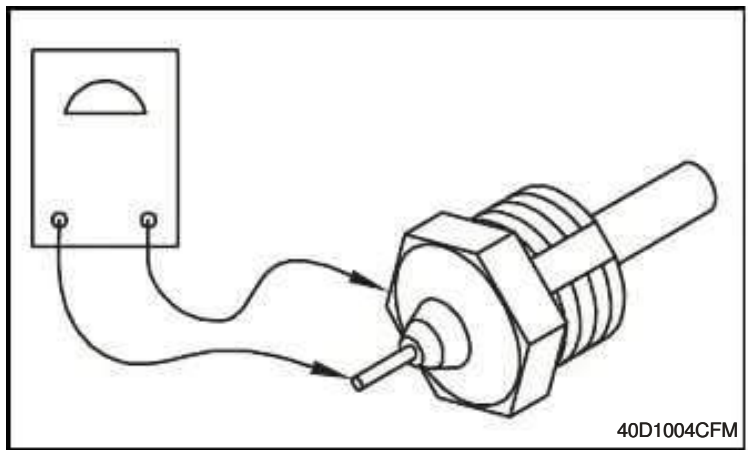

Apply specified heat to sensor while checking resistance between sensor terminal and body of sensor. Replace sensor if not to specification.

Bin Position Sensor Test

Specifications

Check Resistance Across Terminals A and C
Resistance - - - - - - - - - - - - - - - - 5000 ± 1000 Ohms

Check Terminals A and B (Sensor Lever Rotated Fully

Clockwise) Resistance - - - - - - - - - - - 350 ± 70 Ohms
Check Terminals B and C Ohms (Sensor Lever
Rotated Fully Clockwise) Resistance- - - - 5350 ± 1070

Check Terminals A and B (Sensor Lever Rotated Fully
Counter clockwise) Resistance - - 5350 ± 1070 Ohms

Check Terminals B and C (Sensor Lever Rotated Fully
Counter clockwise) Resistance - - - - - 350 ± 70 Ohms

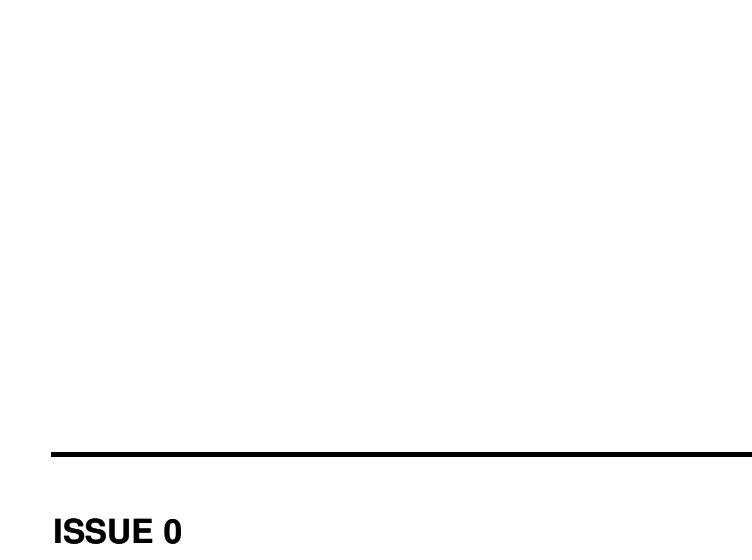

Disconnect wire connector (1) and linkage (2) from sensor lever.

NOTE: It is necessary to remove sensor from mounting bracket to give the sensor lever full travel.

Remove cap screws and nuts (3).

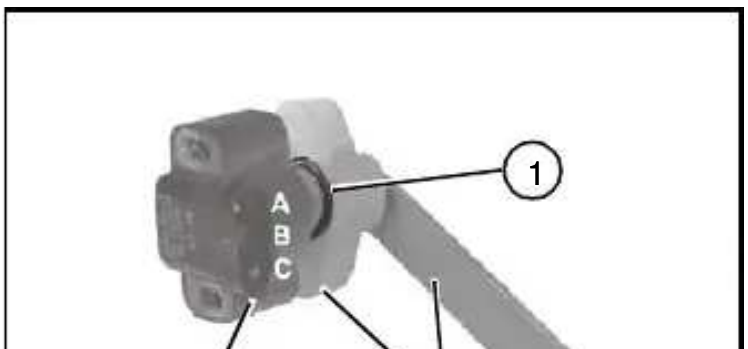

Insert shaft of support and lever (2) into body position sensor (3) and rotate lever fully clockwise (as viewed from lever side of sensor). Measure resistance across sensor terminals A and B, then across terminals B and C.

Replace sensor if resistance is not to specification.

With test leads of ohmmeter attached to terminals A and B or B and C, slowly rotate sensor lever fully counter clockwise (as viewed from lever side of sensor).

The change in resistance from stop-to-stop must be smooth and continuous in correlation to lever movement.

Replace sensor if resistance is not to specification when lever is fully rotated or if change in resistance is uneven or stops changing as sensor lever is rotated.

Install body position sensor (3), support and lever (2), and cap screws and nuts. Make sure O-rings (1) are in position.

Connect linkage (2) and wire connector (1).

NOTE: The body position sensor needs to be calibrated whenever the sensor, CCU, or MDU is replaced. The sensor may also need re-calibrating if the key switch is turned to the ON position while sensor is disconnected.

Calibrate sensor to the full body down and full body up positions.

To calibrate sensor:

- Start engine. Make sure bin is at the full down position.
- Access menu function D041 on menu display unit (MDU). For information on accessing the
- MDU menu structure, **(See CHAPTER 8 in the OMM)**.
- Push and hold the SELECT button on the

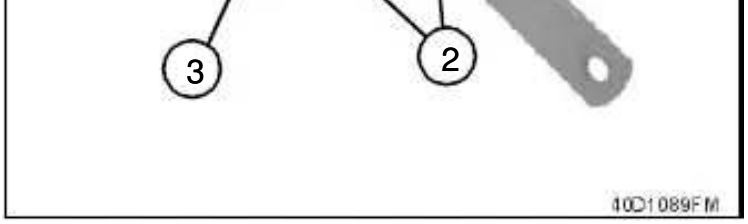

Remove sensor by separating support and lever (2) from body position sensor (3).

Measure resistance across terminals A and C of body position sensor. Replace sensor if not to specification.

- Push and hold the SELECT button on the MDU for a least 3 seconds to set the 0% position.
- Raise bin to the full raised position.
- Access menu function D042. Push and hold the SELECT button for at least 3 seconds to set the 100% position.
- Lower bin fully. Stop engine.

Steering Column Switch Test

	POSITION		CONNECTOR X20											CONNECTOR X21		
			1	2	3	4	5	6	7	8	9	10	11	12	1	2	4
Wipers	Intermittent	J								●						●	
	Off	0		●				●									
	Low Speed	1		●						●							
	High Speed	2	●							●							
Washer		L							●						●		
Turn Signals	Left										●	●					
		R															
	Right	2										●	●				
Drive Lights	High Beam	1			●	●											
	Low Beam					●	●										
	Momentary High Beam	0			●									●			
Horn															●		●

Remove the steering column switch assembly.

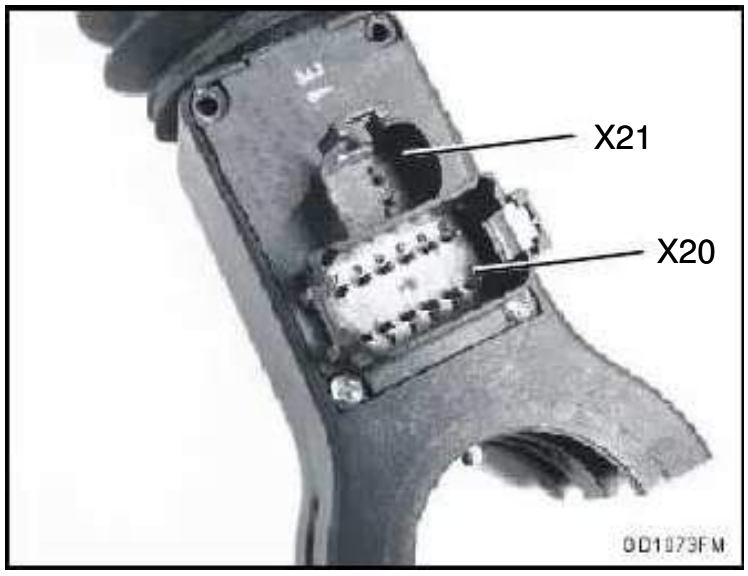

While operating the switch functions, check for continuity across terminals as indicated in the switch legend.

Replace the switch assembly if continuity is not according to the switch legend.

Retarder Voltage Regulator Test

Specifications At Terminal 2 and 4

Control Lever at Position **0** (12%) voltage
- - - - - - - - - 0.8 volts at terminal 2 of Voltage regulator
- - - - - - - - - 1.6 volts at terminal 4 of voltage regulator

Control Lever at Position **1** voltage
- - - - - - - - - 1.2 volts at terminal 2 of Voltage regulator
- - - - - - - - - 1.6 volts at terminal 4 of voltage regulator

Control Lever at Position **2** voltage
- - - - - - - - - 1.6 volts at terminal 2 of Voltage regulator
- - - - - - - - - 1.7 volts at terminal 4 of voltage regulator

Control Lever at Position **3** Voltage
- - - - - - - - - 2.1 volts at terminal 2 of voltage regulator
- - - - - - - - - 2.1 volts at terminal 4 of voltage regulator

Control Lever at Position **4** Voltage
- - - - - - - - - 2.7 volts at terminal 2 of voltage regulator
- - - - - - - - - 2.7 volts at terminal 4 of voltage regulator

Control Lever at Position **5** Voltage
- - - - - - - - - 3.4 volts at terminal 2 of voltage regulator
- - - - - - - - - 3.4 volts at terminal 4 of voltage regulator

Control Lever at Position **6** (100%) Voltage
- - - - - - - - - 4.2 volts at terminal 2 of voltage regulator
- - - - - - - - - 4.3 volts at terminal 4 of voltage regulator

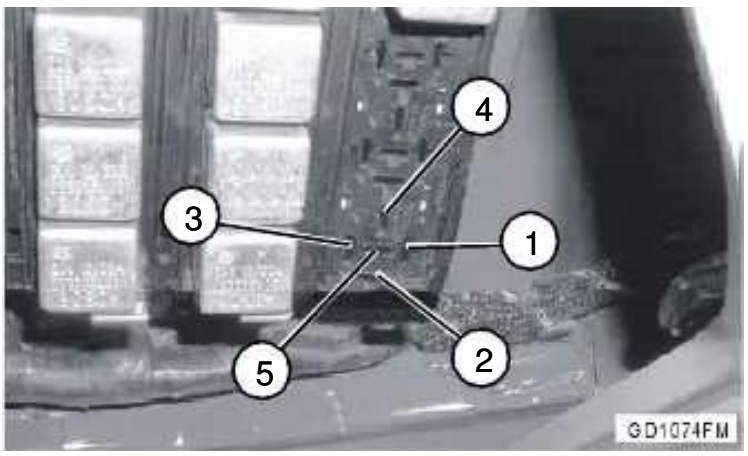

1. Terminal 1 (Voltage from Stop Light Pressure Switch).
2. Terminal 2 (Input Control Voltage).
3. Terminal 3 (Ground).
4. Terminal 4 (Output Control Voltage).
5. Terminal 5 (System Voltage).

Remove retarder voltage regulator.

Check for continuity between ground and terminal (3) of retarder voltage regulator socket. If

Check for voltage at terminal (2) while slowly moving retarder controller lever to each detent position.

Voltage should be approximately as specifications.

Start engine. Check terminal (1) for voltage while applying the service brakes, then check for voltage while brakes are released.

System voltage must be measured when service brakes are applied. Zero voltage must be measured when brakes are released.

If these conditions do not occur as described, check the stop light circuit.

Stop engine. Key switch at **OFF** position.

Install retarder voltage regulator.

Remove the four mounting screws to access the backside of the right relay socket array.

Turn key switch to **ON** position.

Check for voltage at terminal (4) while slowly moving retarder controller lever to each detent position.

Voltage should be approximately as specifications.

continuity is not indicated, check cab main harness (W10).

NOTE: The battery disconnect switch must be in the ON position when performing the following checks.

Turn key switch to **ON** position and check for system voltage at terminal (5). If system voltage is not measured, check fuse F11 and circuit breaker F3. If OK, check cab main harness (W10).

specifications.

Start engine and move the retarder controller lever to position 0 (12% retardation).

Apply the service brakes while checking for voltage at terminal (4). With the service brakes applied, voltage at terminal (4) must be at maximum output voltage (approximately 4.3 volts).

Stop engine. Install relay socket array.

If specified voltages exist at terminals (1,2, and 5) and ground exists at terminal 3, but voltage at terminal (4) is not to specification, replace retarder voltage regulator.

Transmission Speed Sensors Test

Specifications

Transmission Temperature at 40°C (–40°F) Resistance - 200 Ohms.

Transmission Temperature at 20°C (68°F) Resistance - 300 Ohms.

Transmission Temperature at 110°C (230°F Resistance - 400 Ohms.

Disconnect speed sensor connector.

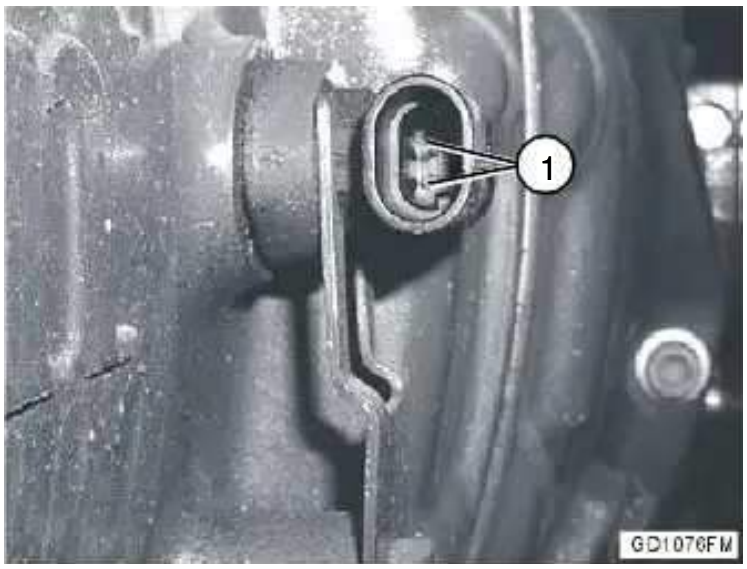

Measure resistance across sensor terminals (1).

Replace sensor if not within specification.

Transmission Solenoids Test

Disconnect transmission control module connector (X171).

Measure resistance of each solenoid across appropriate terminals.

Specification

Transmission Temperature at 20°C (4°F) - Resistance

Transmission Temperature at 100°C (212°F) Resistance - - - - - - - - - - - - - - - - - - - 3.90 - 4.50 Ohms.

Transmission Temperature at 120°C (248°F) - Resistance - 4.20 - 4.75 hms.

Transmission Temperature at 140°C (284°F) - Resistance - - - - - - - - - - - - - - - - - - - 4.45 - 5.05 Ohms,

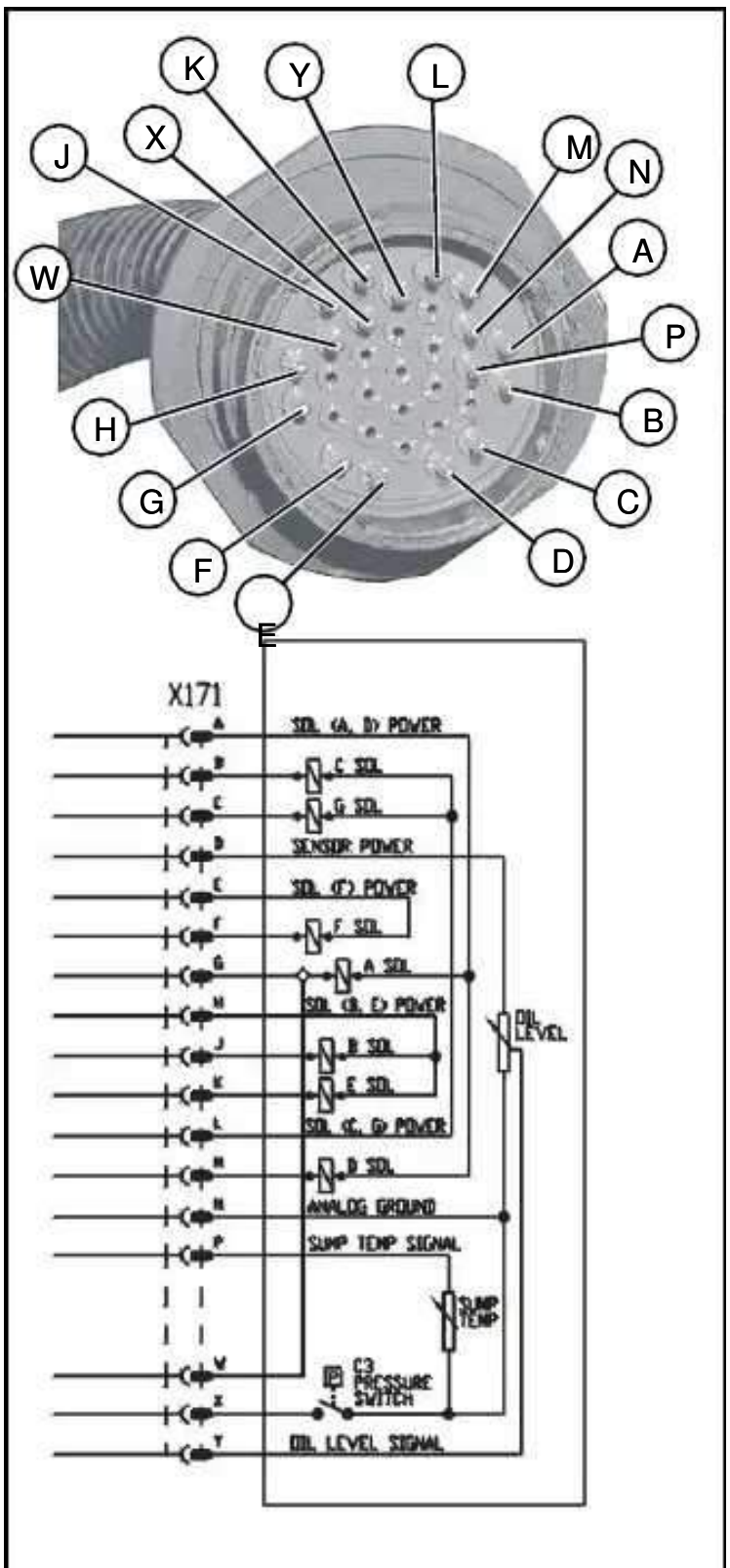

- 2.50 - 2.90 Ohms/

Transmission Temperature at 0°C (32°F) - Resistance
- 2.75 - 3.20 Ohms.

Transmission Temperature at 20°C (68°F) - Resistance

- 2.95 - 3.50 Ohms.

Transmission Temperature at 40°C (104°F) -
Resistance - - - - - - - - - - - - - - - - - - - 3.20 - 3.75 Ohms.

Transmission Temperature at 60°C (140°F) Resistance
- 3.45 - 4.00 Ohms.

Transmission Temperature at 80°C (176°F) -
Resistance- 3.70 - 4.25 Ohms.

GD098FM

- Solenoid A = Terminals A and G
- Solenoid B = Terminals H and J
- Solenoid C = Terminals B and L
- Solenoid D = Terminals A and M
- Solenoid E = Terminals H and K
- Solenoid F = Terminals E and F
- Solenoid G = Terminals C and L

Remove and Install Electronic Unit Injector (EUI) Controller

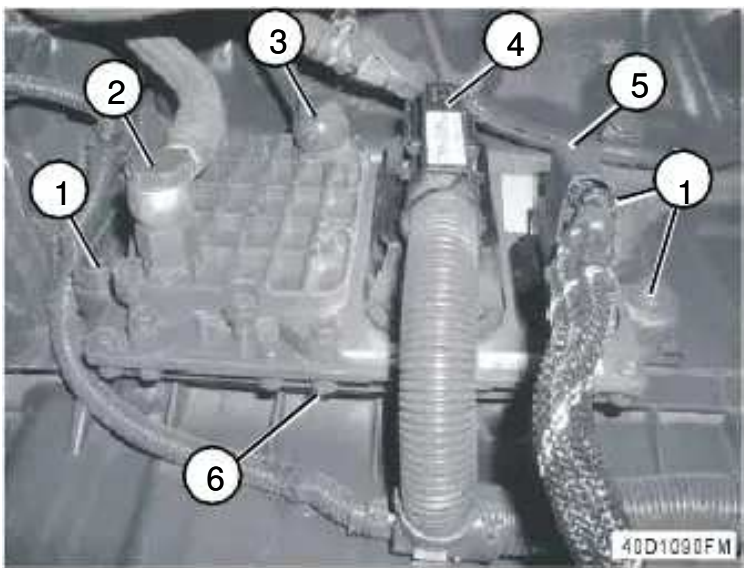

Turn key switch and battery disconnect switch to **OFF** position.

Disconnect harness connectors (4 and 5).

Disconnect fuel lines (2 and 3).

Remove cap screws and washers (1) to remove EUI controller (6).

Install EUI controller (6).

Connect fuel lines (2 and 3) and wire harnesses (4 and 5).

Remove and Install Engine Control Unit

Turn key switch and battery disconnect switch to **OFF** position.

Remove controller access panel located under left console.

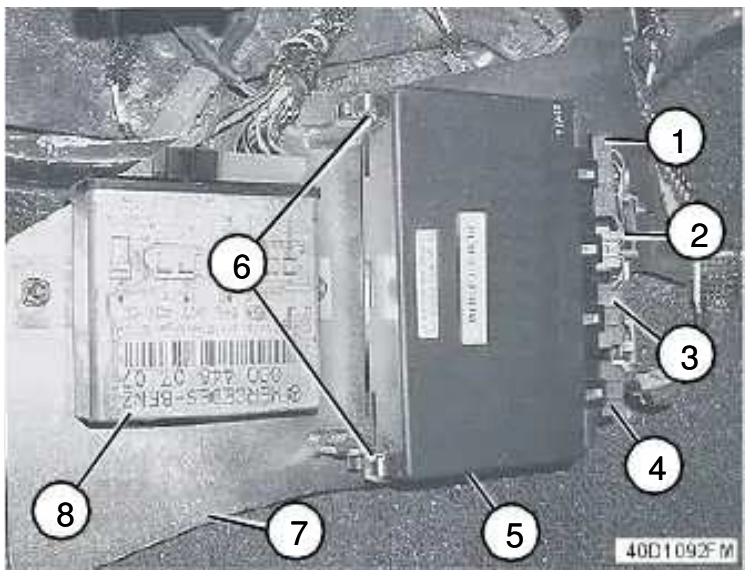

To separate ECU (5) from mounting plate (7), push ECU against spring clips (6) until opposite end of ECU is free of mounting.

Disconnect harness connectors (1 to 4).

To install, push ECU against spring clips (6) until opposite side of ECU snaps into position on mounting plate.

Connect harness connectors (1 to 4).

Install the ECU and mounting plate as an assembly in slot provided in controller compartment.

Install controller access panel.

Turn battery switch to ON position.

Turn key switch to ON position and access the MDU menu function B013. For information on accessing the MDU menu structure, **(See CHAPTER 8 in the OMM)**.

While observing the number that represents pedal position as a percentage on the MDU data display, depress accelerator pedal fully to fast idle position, then allow pedal to return fully to slow idle position.

Movement of the accelerator pedal (slow idle to the fast idle) should correspond from 0% to 100% on the data display.

Remove cap screw (1). Remove engine control unit (ECU) (2) and mounting plate (3) as an assembly.

NOTE:An acceptable margin of error between pedal movement relative to percentage read-out will differ from operator to operator. Because of this, the need for re-calibration will be determined by operator preference.

If the percentage read-out relative to pedal movement is not acceptable, calibration of accelerator pedal position sensor is required. To perform this procedure, a special diagnostic tool called the MiniDiag II (Version B) is needed. The MiniDiag II can be acquired from ***BELL EQUIPMENT*** Product Support.

NOTE:1. The MiniDiag II is capable of reading and deleting engine related service codes and calibrating accelerator pedal position. Follow the instructions that come with the diagnostic tool.

2. Call DTAC (*BELL EQUIPMENT* Product Support) for additional help.

Remove and Install Cold Start Module

Turn key switch and battery disconnect switch to **OFF** position.

Remove controller access panel located under left console.

Remove cap screw and washer (1). Remove cold start module (2) and mounting plate (3) as an assembly.

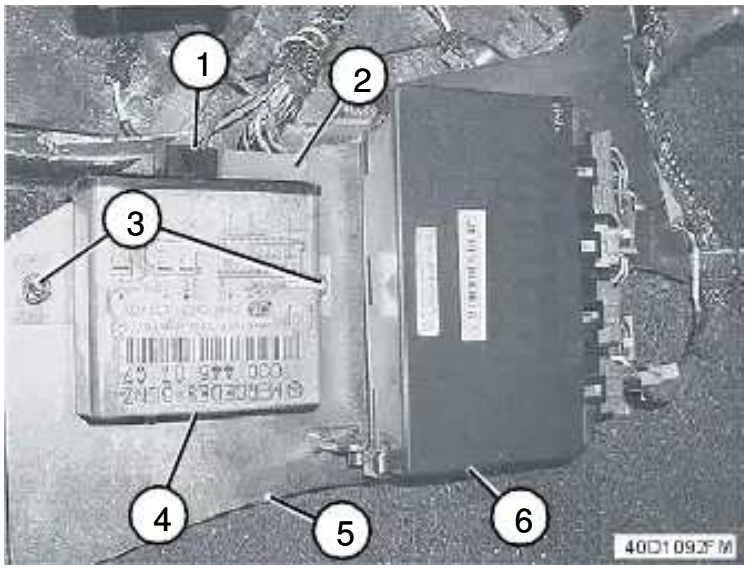

Disconnect harness connectors (1 and 2).

Remove cap screws, washers, and nuts (3) to separate cold start module (4) from mounting plate (5).

Fasten cold start module to mounting plate and connect harness connectors.

Install the cold start module and mounting plate as an assembly in slot provided in controller compartment.

Install controller access panel.

Remove and Install Chassis Control Unit

Turn key switch and battery disconnect switch to **OFF** position.

Remove controller access panel located under left console.

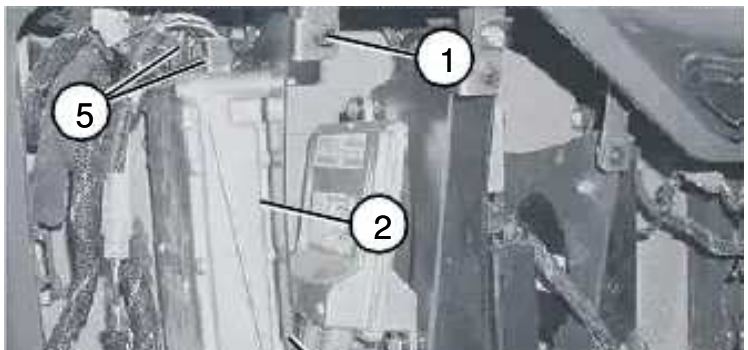

Remove cap screw and washer (1). Remove chassis control unit (CCU) (2) and mounting plate as an assembly.

Disconnect harness connectors (4 and 5).

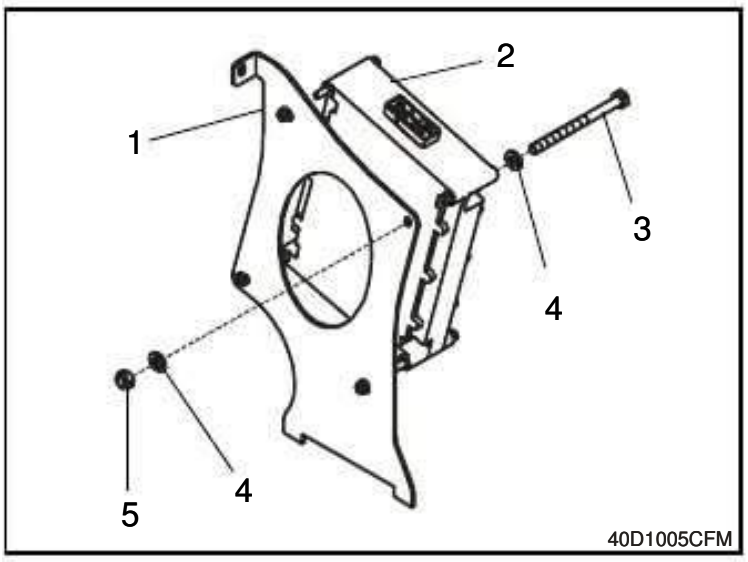

Remove lock nuts (5), washers (4), and cap screws (3) to separate CCU (2) from mounting plate (1).

Fasten CCU to mounting plate and connect harness connectors.

Install CCU and mounting plate as an assembly in slot provided in controller compartment.

Install controller access panel.

Remove and Install Transmission Control Unit

Turn key switch and battery disconnect switch to **OFF** position.

Remove controller access panel located under left console.

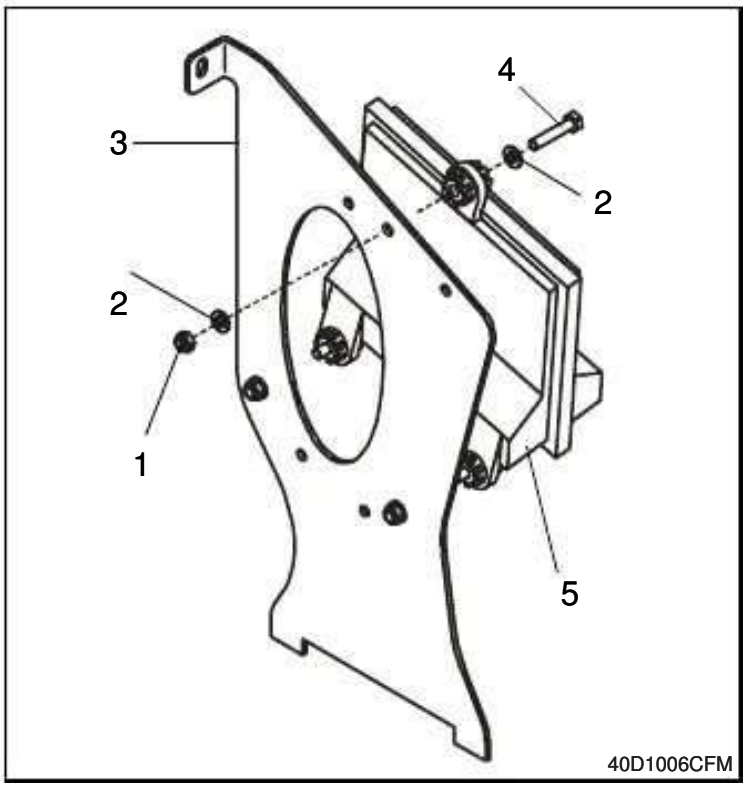

Remove lock nuts (1), washers (2), and cap screws (4) to separate TCU (5) from mounting plate (3).

Fasten TCU to mounting plate and connect harness connectors.

Install TCU and mounting plate as an assembly in slot provided in controller compartment.

Install controller access panel.

Remove and Install Battery Balancer

Turn key switch and battery disconnect switch to **OFF** position.

Remove controller access panel located under left console.

Remove cap screw and washer (1). Remove transmission control unit (TCU) (3) and mounting plate (2) as an assembly.

Disconnect harness connectors (4).

Remove cap screw and washer (2). Remove battery balancer (3) and mounting plate (1) as an assembly.

Disconnect harness connector.

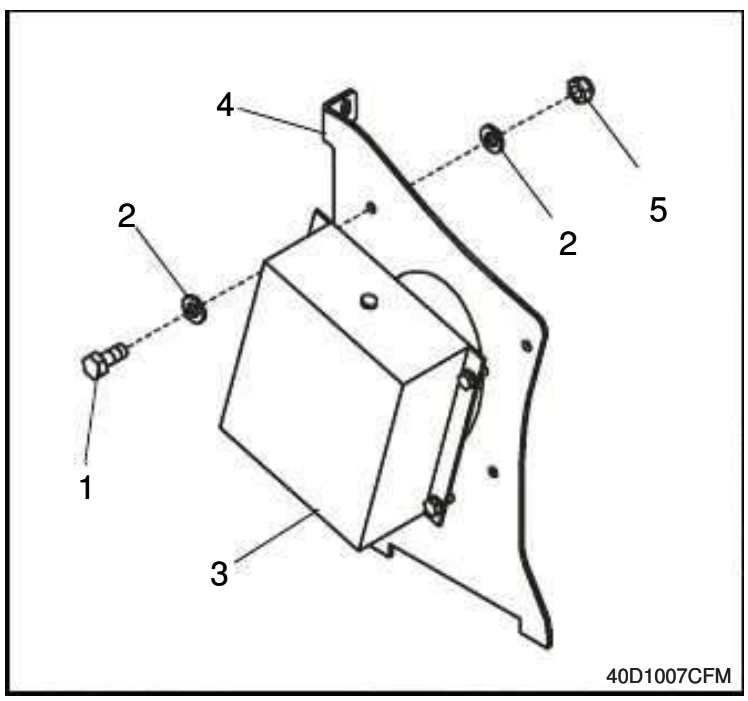

Remove nuts (5), washers (2), and cap screws (1) to separate battery balancer (3) from mounting plate (4).

Fasten battery balancer to mounting plate and connect harness connector.

Install battery balancer/mounting plate assembly in slot provided in controller compartment.

Install controller access panel.

Remove and Install Menu Display Unit

Turn key switch and battery disconnect switch to **OFF** position.

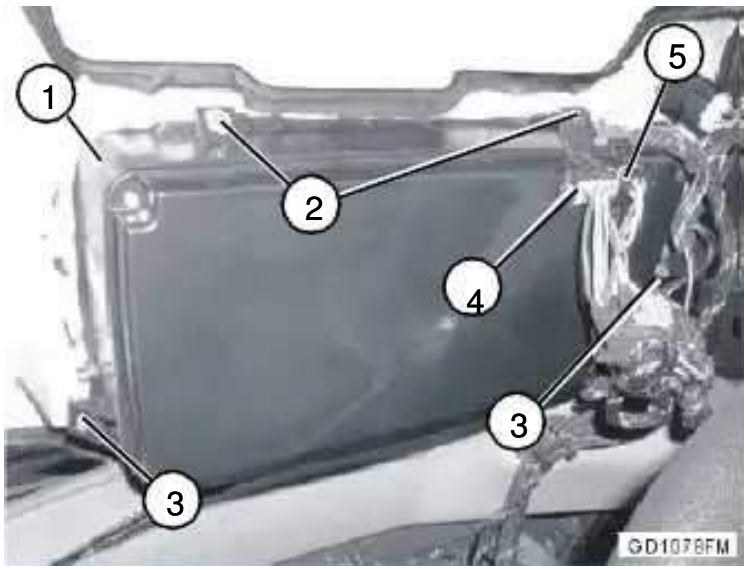

Disconnect harness connectors (4 and 5).

Remove screws (2 and 3) to remove MDU.

Install MDU and fasten with screws (2 and 3). Make sure screws with four washers (2) are at bottom (connector) side of MDU.

Connector harness connectors (4 and 5).

Close front console and fasten with three screws.

Replace Monitor Display Unit Bulbs

Turn key switch and battery disconnect switch to **OFF** position.

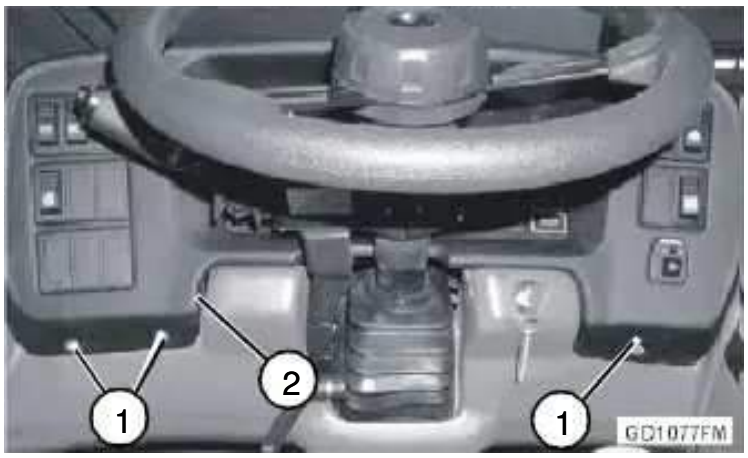

Remove screws (1) and pivot front console (2) upward to access backside of MDU.

Remove screws (1) and pivot front console (2) upward to access backside of MDU.

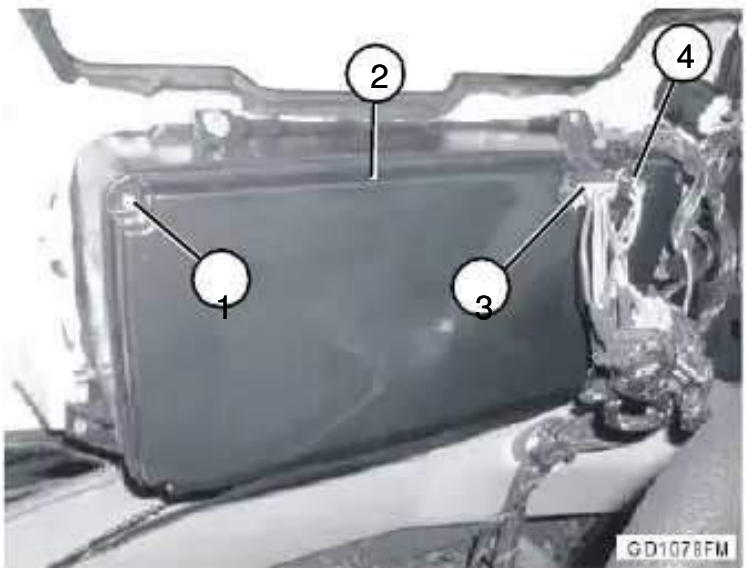

Disconnect harness connectors (3 and 4).

Remove four screws (1) to remove back panel (2).

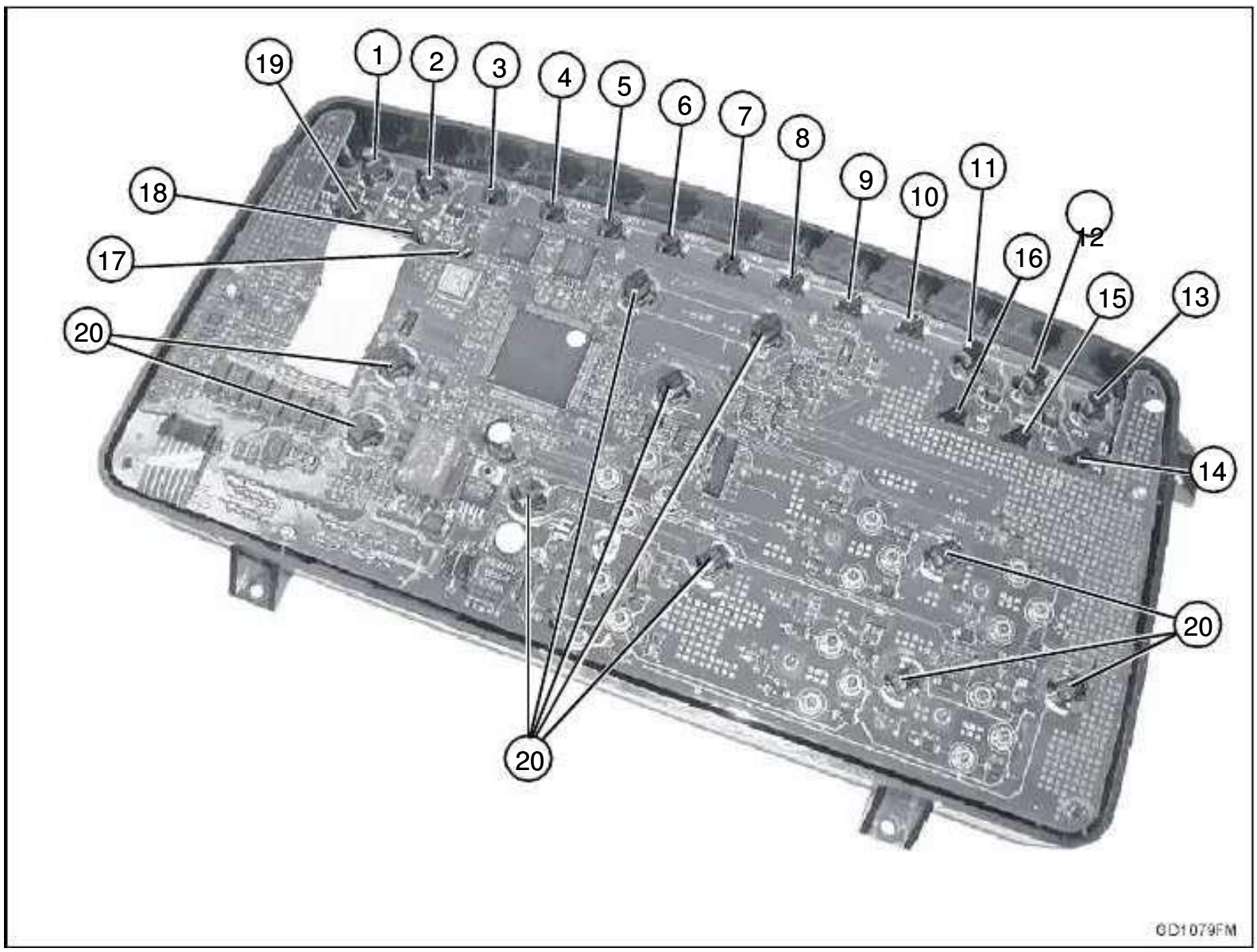

1. Hydraulic Temperature Light.
2. Brake Temperature Light.
3. Brake Pressure Light.
4. Park Brake Light.
5. Right Turn Indicator.
6. Engine Overspeed Light.
7. High Beam Indicator.
8. Service Required Light.
9. Left Turn Indicator.
10. Secondary Steering (Marked Emergency Steering) Light.
11. Engine Service (Marked Engine Fault) Light.
12. Coolant Level Light.
13. Cold Start Light.
14. Battery Charge Light.
15. Transmission Retarder Light.

NOTE:MDU shown removed for illustration purposes only.

Replace bulb(s) as necessary.

Install MDU back panel and connector harness connectors.

Close front console and fasten with three screws.

15. Transmission Retarder Light.
16. Transmission Service (Marked Transmission Fault) Light.
17. Bin Raised Light (Marked Bin Up) Light.
18. Inter-Axle Lock Light.
19. Differential Lock Light.
20. Back Lights.

Remove, Install, and Calibrate Accelerator Pedal Position Sensor

NOTE: The accelerator pedal position sensor connector is accessed through the A/C compartment door located on right side of cab.

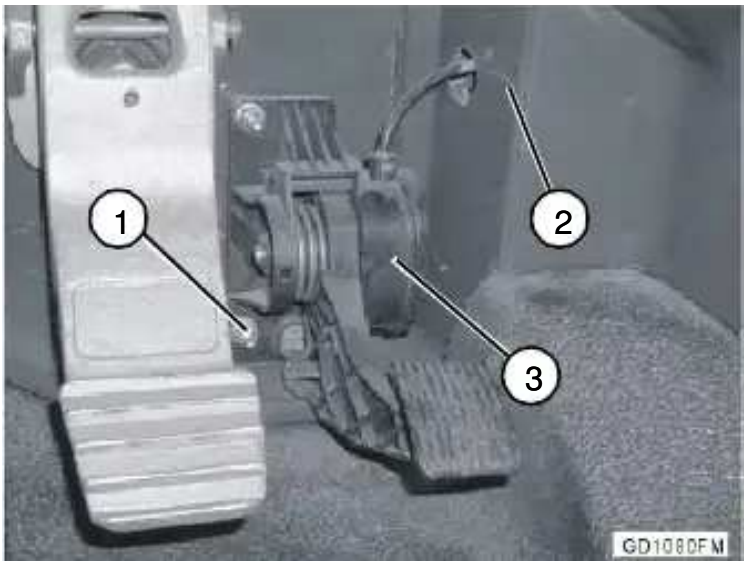

Disconnect harness connector (2) located in the air conditioning compartment.

Remove two cap screws and lock nuts (1) to remove accelerator pedal position sensor (3).

Install sensor and connect harness connector.

Turn key switch to ON position and access the MDU menu function B013. For information on accessing the MDU menu structure, **(See CHAPTER 8 in the OMM)**.

While observing the number that represents pedal position as a percentage on the MDU data display, depress accelerator pedal fully to fast idle position, then allow pedal to return fully to slow idle position.

Movement of the accelerator pedal (slow idle to the fast idle) should correspond from 0% to 100% on the data display.

NOTE: An acceptable margin of error between pedal movement relative to

If the percentage read-out relative to pedal movement is not acceptable, calibration of accelerator pedal position sensor is required. To perform this procedure, a special diagnostic tool called the MiniDiag II (Version B) is needed. The MiniDiag II can be acquired from ***BELL EQUIPMENT*** Product Support.

NOTE: The MiniDiag II is capable of reading and deleting engine related service codes and calibrating accelerator pedal position. Follow the instructions that come with the diagnostic tool. Call DTAC (*BELL EQUIPMENT* Product Support) for additional help.

Replace DEUTSCH™ Rectangular or Triangular Connectors

NOTE: Connector shown is the female half or a 4-pin square connector. Other similar styles of Deutsch connectors can be serviced using the same procedure.

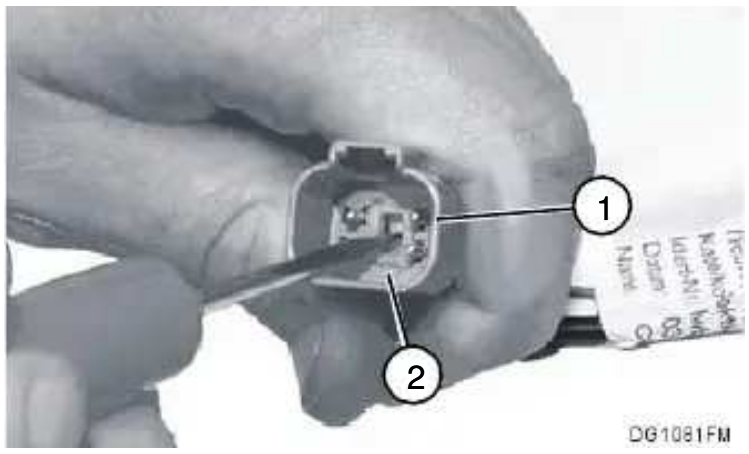

Pull connector (1) apart. Inspect and clean connector seal and contacts.

Remove locking wedge (2) from connector using hook on JDG1383 service tool.

percentage read-out will differ from operator to operator. Because of this, the need for re-calibration will be determined by operator preference.

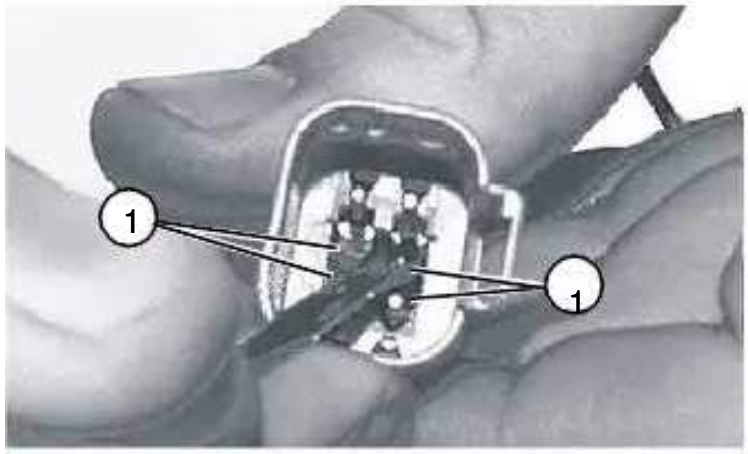

Release primary locking latch (1) next to the pin to be removed using screwdriver on JDG1383 service tool.

Gently pull wire out from back of connector. Replace connector contact as necessary. **See "Install DEUTSCH™ Contact" on page 208.**

Install wire terminal back into connector until it clicks into place.

NOTE: Locking wedge in 2-pin connector is not symmetrical. Position latch shoulder next to terminals.

Install locking wedge until it snaps into place.

Replace DEUTSCH™ Connectors

1. Select correct size extractor tool for size of wire to be removed:

- JDG361 Extractor Tool for 12 to 14 gauge wire.

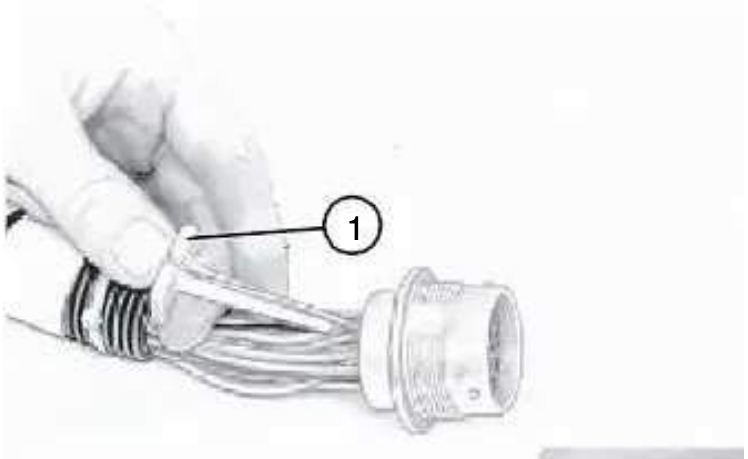

Start correct size extractor tool over wire at handle (1).

Slide extractor tool rearward along wire until tool tip snaps onto wire.

⚠ CAUTION

Do NOT twist tool when inserting in connector.

Slide extractor tool along wire into connector body until it is positioned over terminal contact.

Pull wire out of connector body, using extractor tool.

⚠ WARNING

Install contact in proper location using correct size grommet.

- JDG362 Extractor Tool for 16 to 18 gauge wire.
- JDG363 Extractor Tool for 20 gauge wire.

Push contact straight into connector body until positive stop is felt.

Pull on wire slightly to be certain contact is locked in place.

Transfer remaining wires to correct terminal in new connector.

Install DEUTSCH™ Contact

Strip 6 mm (1/4 in.) insulation from wire.

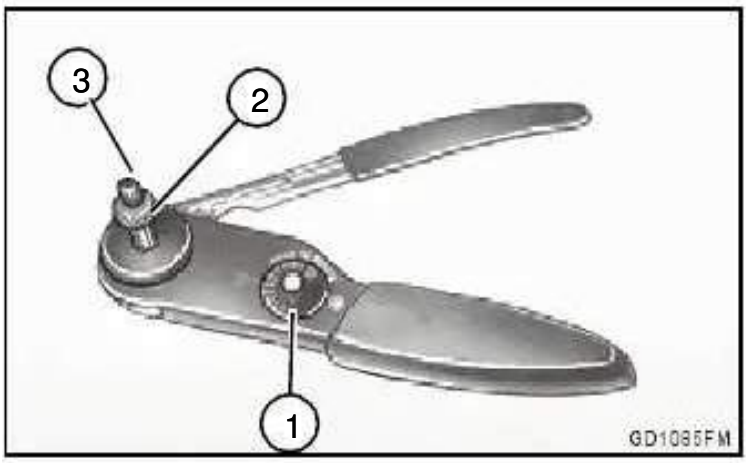

Adjust selector (1) on JDG360 Crimper for correct wire size.

Loosen lock nut (2) and turn adjusting screw (3) in until it stops.

⚠ WARNING

Select proper size contact "sleeve" or "pin" to fit connector body.

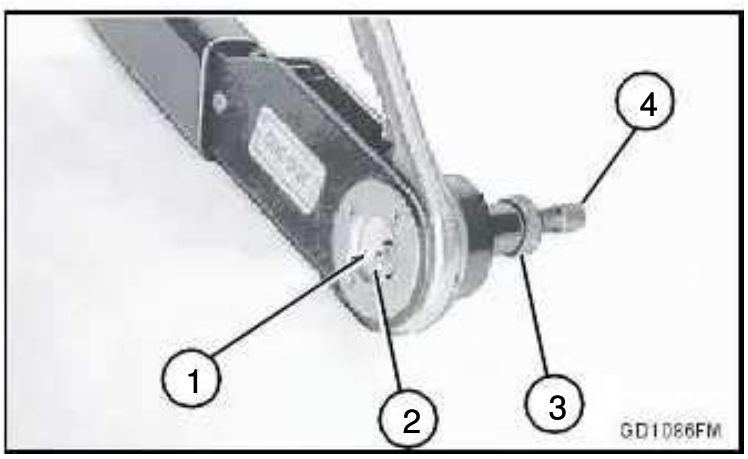

Insert contact (1) and turn adjusting screw (4) until contact is flush with cover (2).

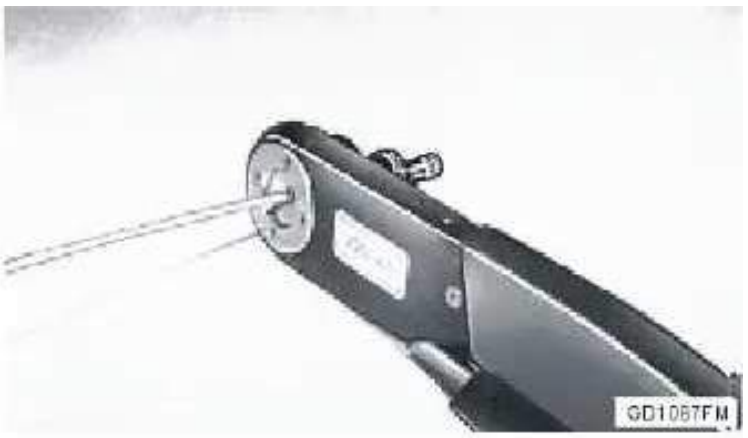

Insert wire in contact and crimp until handle touches stop.

Release handle and remove contact.

⚠ WARNING

If all wire strands are not crimped into contact, cut off wire at contact and repeat contact installation procedures.

NOTE: Readjust crimping tool for each crimping procedure.

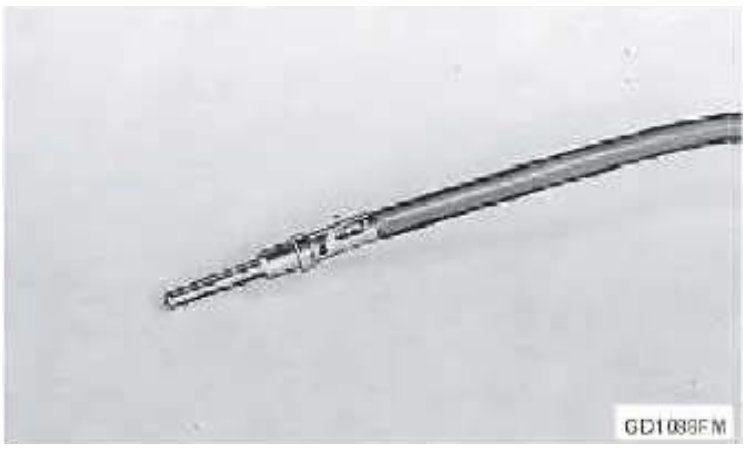

Inspect contact to be certain all wires are in crimped barrel.

Replace WEATHER PACK™ Connector

⚠ WARNING

Identify wire colour locations with connec-

Tighten lock nut (3).

⚠ WARNING

Contact must remain centred between indentures while crimping.

tor terminal letters.

Open connector body.

Insert JDG364 Extraction Tool over terminal contact in connector body.

Hold extractor tool fully seated and pull wire from connector body.

NOTE: If terminal cannot be removed, insert wire or nail through extractor tool handle and push terminal contact from connector.

⚠ WARNING

Carefully spread contact lances to assure good seating on connector body.

NOTE: Connector bodies are "keyed" for proper contact mating. Be sure contacts are in proper alignment.

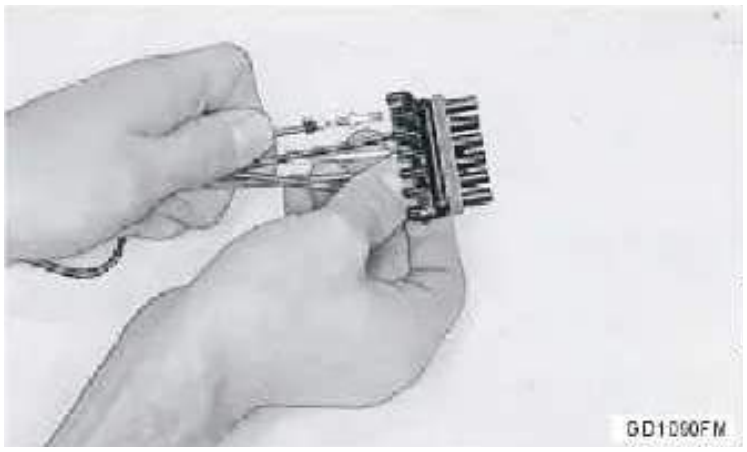

Push contact into new connector body until fully seated.

Install WEATHER PACK™ Contact

NOTE: Cable seals are colour coded for three sizes of wire:
Green - 18 to 20 gauge wire
Gray - 14 to 16 gauge wire

Blue - 10 to 12 gauge wire

Slip correct size cable seal on wire.

Strip insulation from wire to expose 6 mm (1/4 in.) and align cable seal with edge of insulation.

NOTE: Contacts have numbered identification for two sizes of wire:
a) #15 for 14 to 16 gauge wire
b) #19 for 18 to 20 gauge wire

Put proper size contact on wire and crimp in place with a "**W**" type crimp, using JDG783 Terminal Applicator.

Pull on wire slightly to be certain contact is locked in place.

Transfer remaining wires to correct terminal in new connector.

Close connector body.

⚠ WARNING

Proper contact installation for "sleeve" (1) and "pin" (2) is shown.

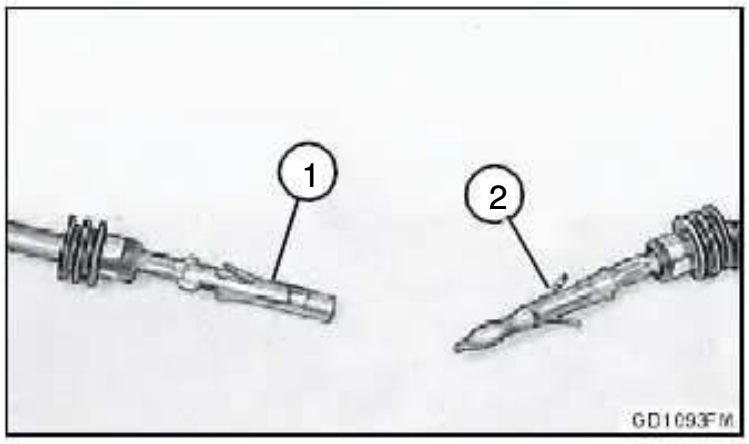

Secure cable seal to contact as shown, using JDG783 Terminal Applicator.

Replace (Pull Type) Metri-Pack™ Connectors

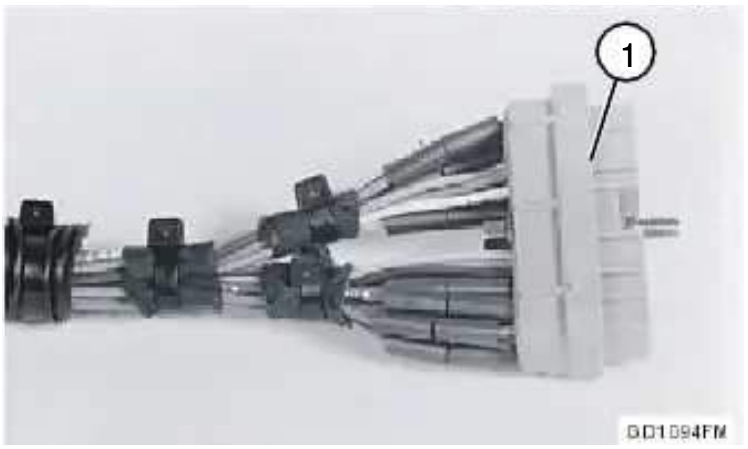

Disconnect the Metri-Pack connector (1). Remove tie bands and tape.

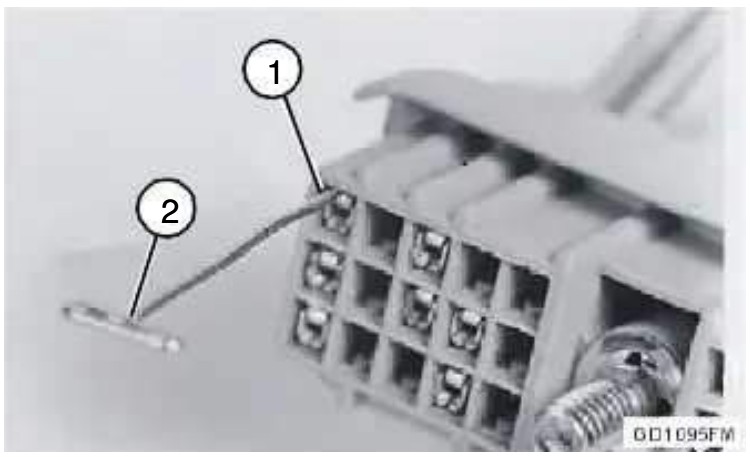

Insert a "**T**" pin (2) 6.4 mm (1/4 in.) into connector body socket (1).

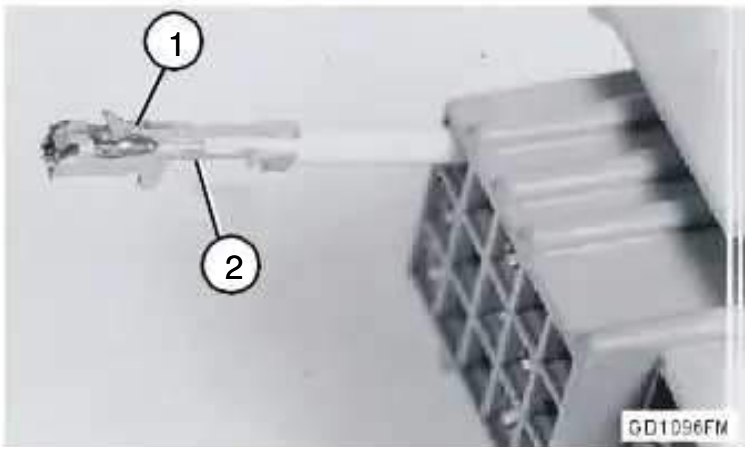

Angle "T" pin so pin tip slides close to the plastic socket edge pushing terminal locking tab (1) inward.

Remove "T" pin and push terminal (2) out of socket.

Remove terminal, cut strip and crimp wire through connector.

Check to make sure locking tab on new terminal is in outward position, then pull on wire until terminal locks in connector body socket.

NOTE: Terminal will seat only one way. If terminal does not pull into the connector body socket, check to make sure terminal is aligned correctly.

Replace (Push Type) Metri-Pack™ Connectors

Disconnect the Metri-Pack connector. Remove the tie bands and tape.

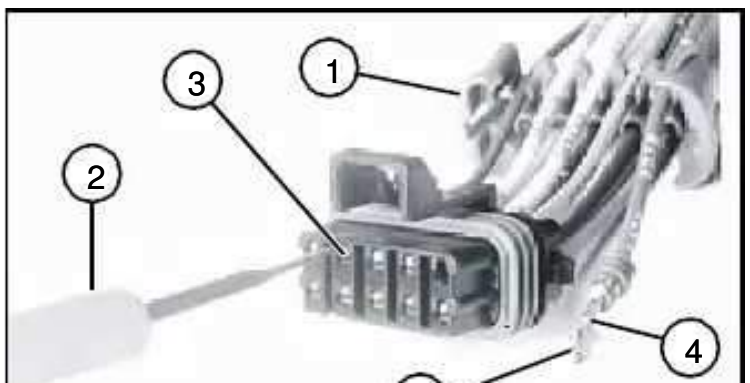

NOTE:Use JDG777 Terminal Extraction Tool or "T" pin to remove terminals.

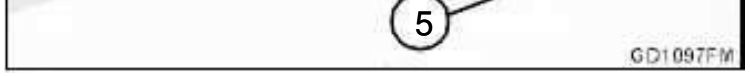

Remove the connector lock (1), and mark wire colours for identification.

Identify wire colour locations with connector terminal letters.

Insert JDG776 or JDG777 Terminal Extraction Tool (2) into connector body socket (3) pushing the terminal locking tab inward.

NOTE:Use JDG776 Extraction Tool with 56, 280 and 630 series METRI-PACK terminals. Use JDG777 Extraction Tool with 150 series METRI-PACK terminals.

Remove extraction tool and pull terminal (4) out of the socket.

Replace terminal. Make sure locking tab (5) on the new terminal is in the outward position.

Push terminal into connector body socket until terminal locks.

Remove Connector Body from Blade Terminals

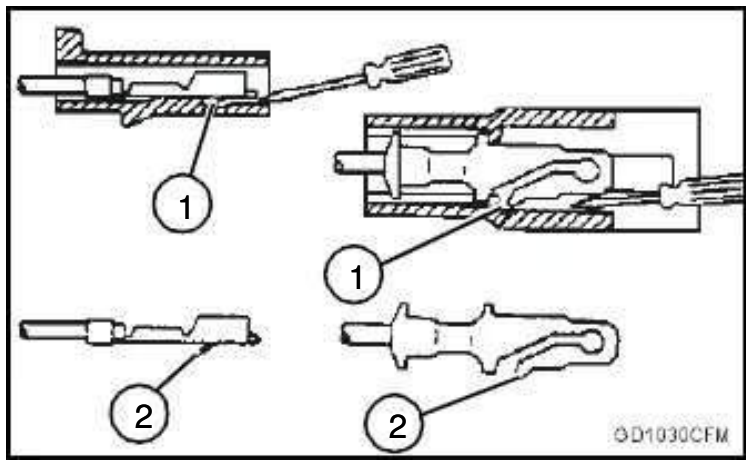

Depress locking tang (1) on terminal, using a small screw driver. Slide connector body off.

Be sure to bend locking tang back to its original position (2) before installing connector body.

LEFT BLANK INTENTIONALLY

CHAPTER 4.TRANSMISSION HD4560

SECTION 1. THEORY OF OPERATION

GENERAL DESCRIPTIONS

Allison HD 4560 PR

- **HD** Automatic Truck Transmission
- **4** Heavy Duty
- **5** Wide Ratio
- **6** Number Of Forward Ranges
- **O** Reserved For Major Model Changes
- **P** Power Takeoff (Pto) N/a To B40D
- **R** Output Retarder

HD 4560R Transmission

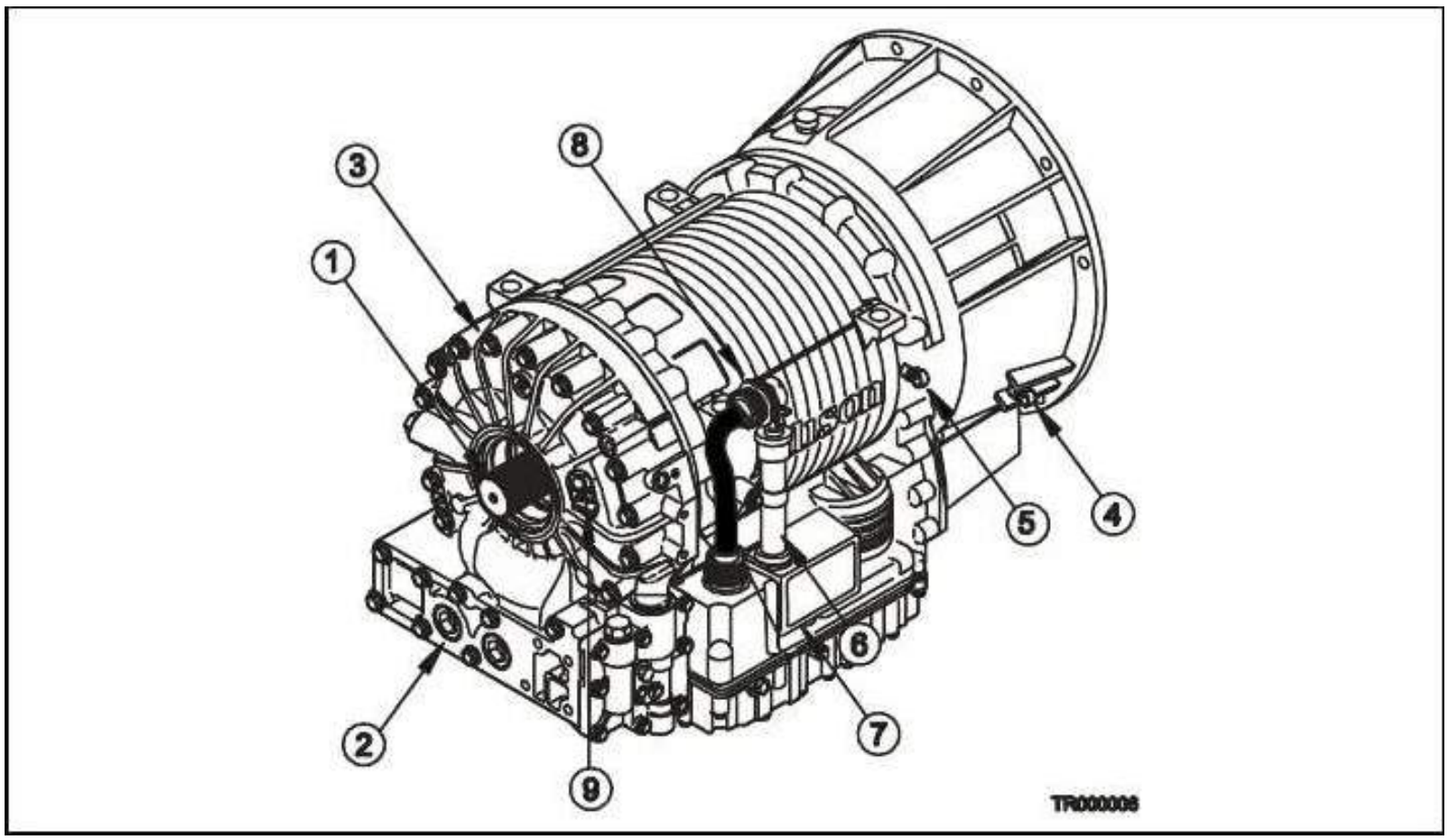

1. Output Shaft
2. Cooler Ports
3. Retarder
4. Engine speed Sensor
5. Turbine speed Sensor.
6. Filler Tube.
7. Identification Plate.
8. Wiring Harness.
9. Output Speed Sensor.

TRANSMISSION IDENTIFICATION

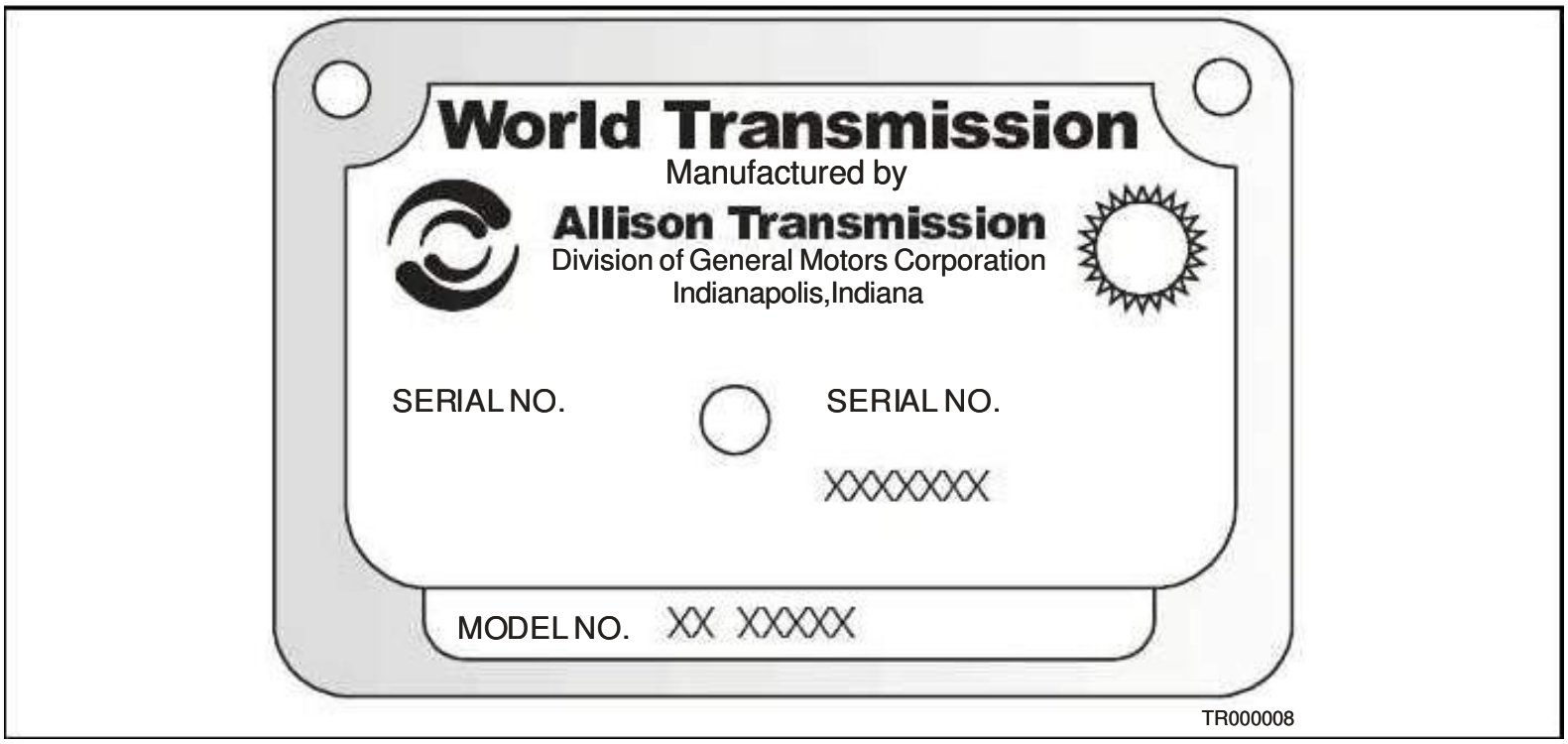

The transmission identification plate is located on the right-rear side of the transmission.

The identification plate shows the transmission serial number, part number (assembly number), and model number.

Use all three numbers when ordering parts.

TORQUE CONVERTER

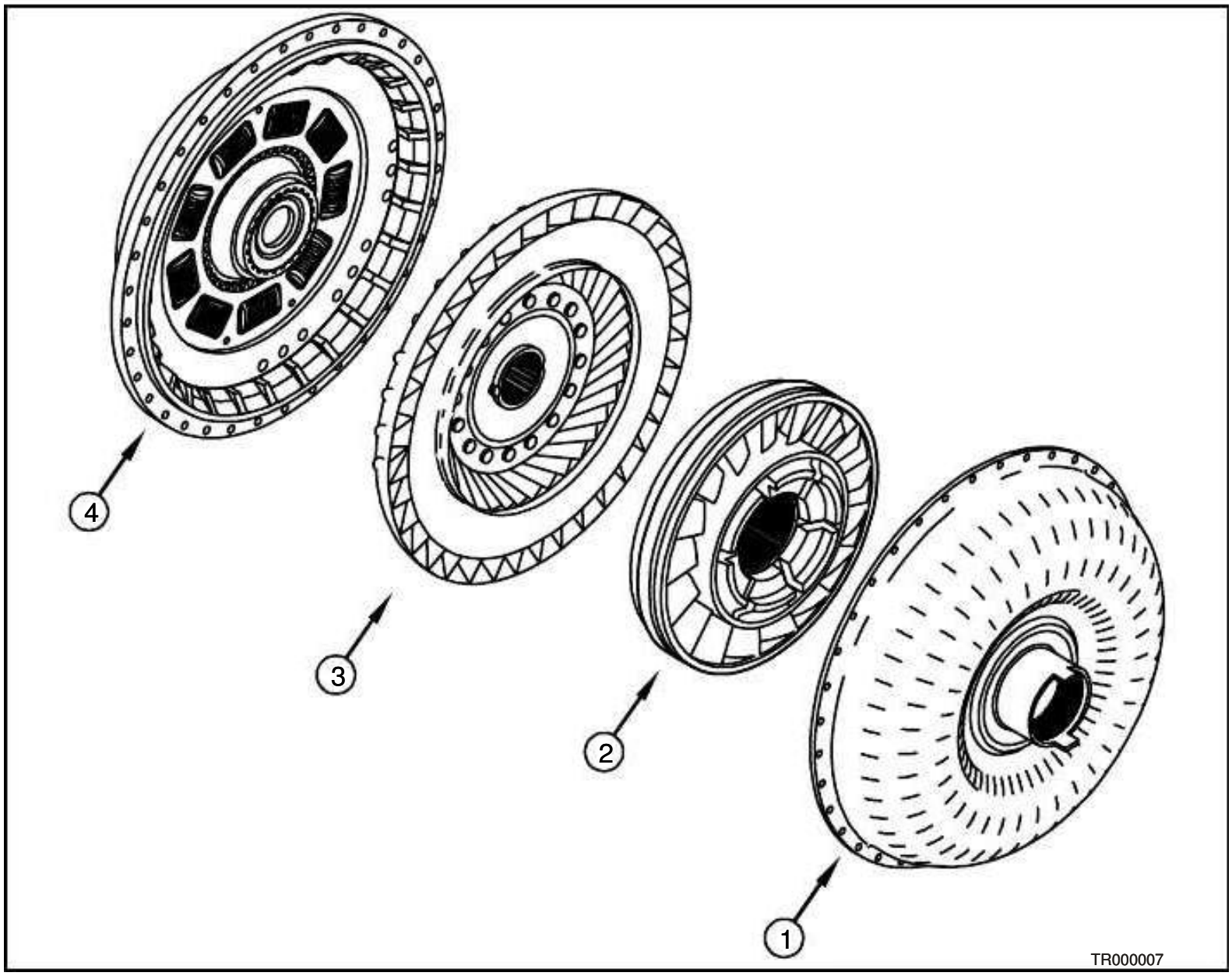

1. Pump.
2. Stator.
3. Turbine.
4. Lock-up Clutch.

Operational Overview

The torque converter provides a hydro-mechanical coupling that supplies rotational input from the engine to the transmission's gearing.

TORQUE CONVERTER OPERATION

The HD torque converter has four main components:

- Pump.
- Stator.
- Turbine.
- Lock-up clutch.

The converter's pump is bolted to the converter cover.

The pump rotates at engine speed

- As the pump rotates, fluid enters from around the pump hub.
- Centrifugal force causes fluid to be thrown around the outside of the pump and over to the converter turbine.
- Once the force reaches a certain point, the fluid begins to spin the turbine.

The converter's turbine is splined to the transmission turbine shaft.

- Fluid from the converter pump strikes the turbine's vanes and eventually forces the turbine to rotate.
- Since the turbine is splined to the turbine shaft, the turbine shaft rotates and supplies input to the transmission's gearing.
- Fluid exits the turbine near its hub and flows to the stator.

The stator redirects fluid back to the converter pump.

- When fluid from the turbine hits the front of the stator blades, the stator locks against its one-way clutch.
- Fluid leaving the locked stator is directed back to the pump at an accelerated rate, increasing torque.
- As the turbine gains speed, it directs oil to the back side of the stator blades, causing the stator to "freewheel".
- Fluid flowing through the freewheeling stator is no longer accelerated and does not increase torque.
- As turbine speed increases, flow through the stator becomes smoother and eventually stops.

Stator One-way Clutch Operation

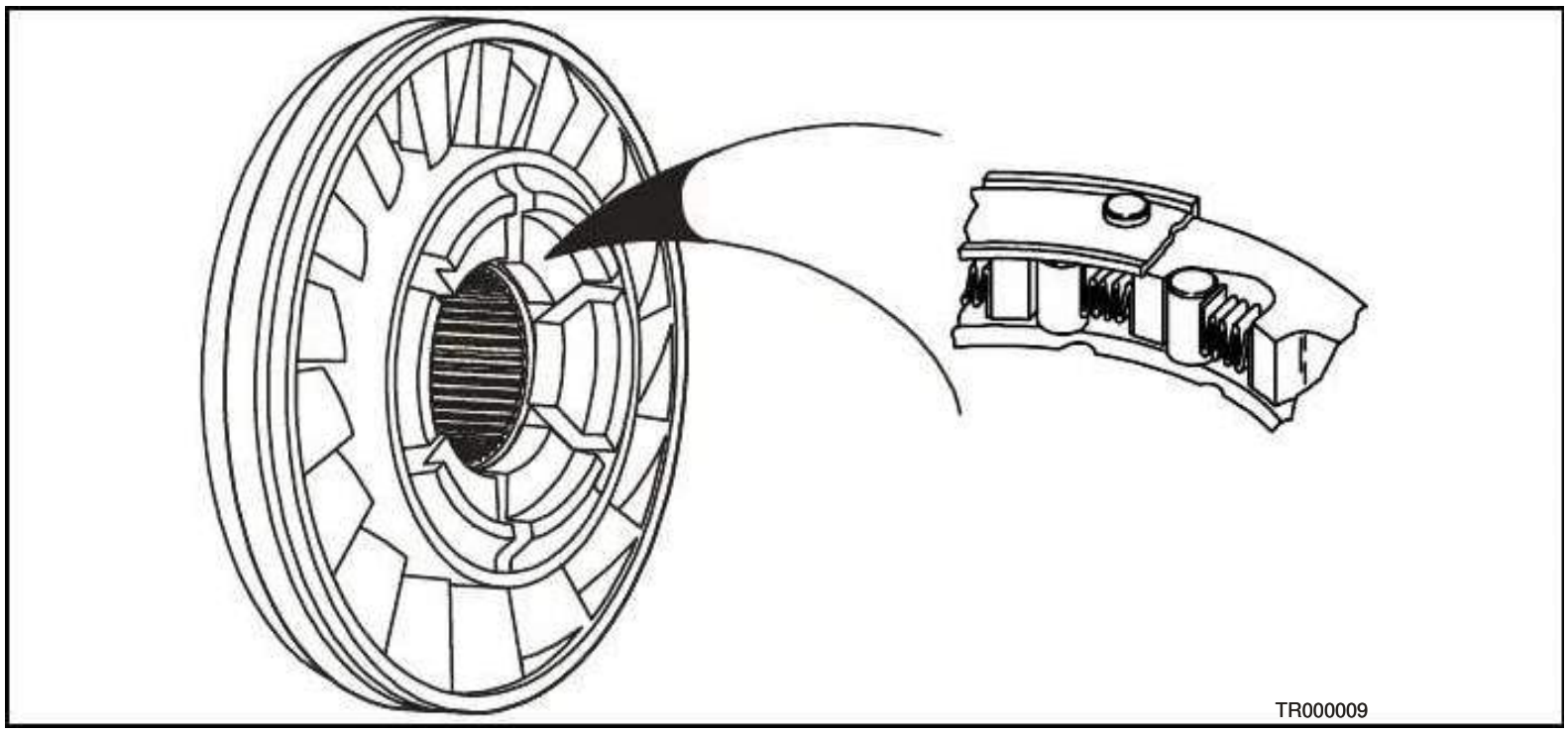

The stator's one-way clutch provides locking and freewheeling action.

- A series of rollers and springs are located inside the stator.
- When fluid strikes the front of the stator blades, the stator tries to rotate in a counter clockwise direction.
- This wedges the rollers into the small side of the tapered cavity, the stator is locked and can't rotate that direction.
- When fluid strikes the back side of the stator blades, the stator begins to rotate in a clockwise direction.
- The wedged rollers are released, and the one-way clutch's design allows the stator to rotate in a clockwise direction.

Vortex Flow

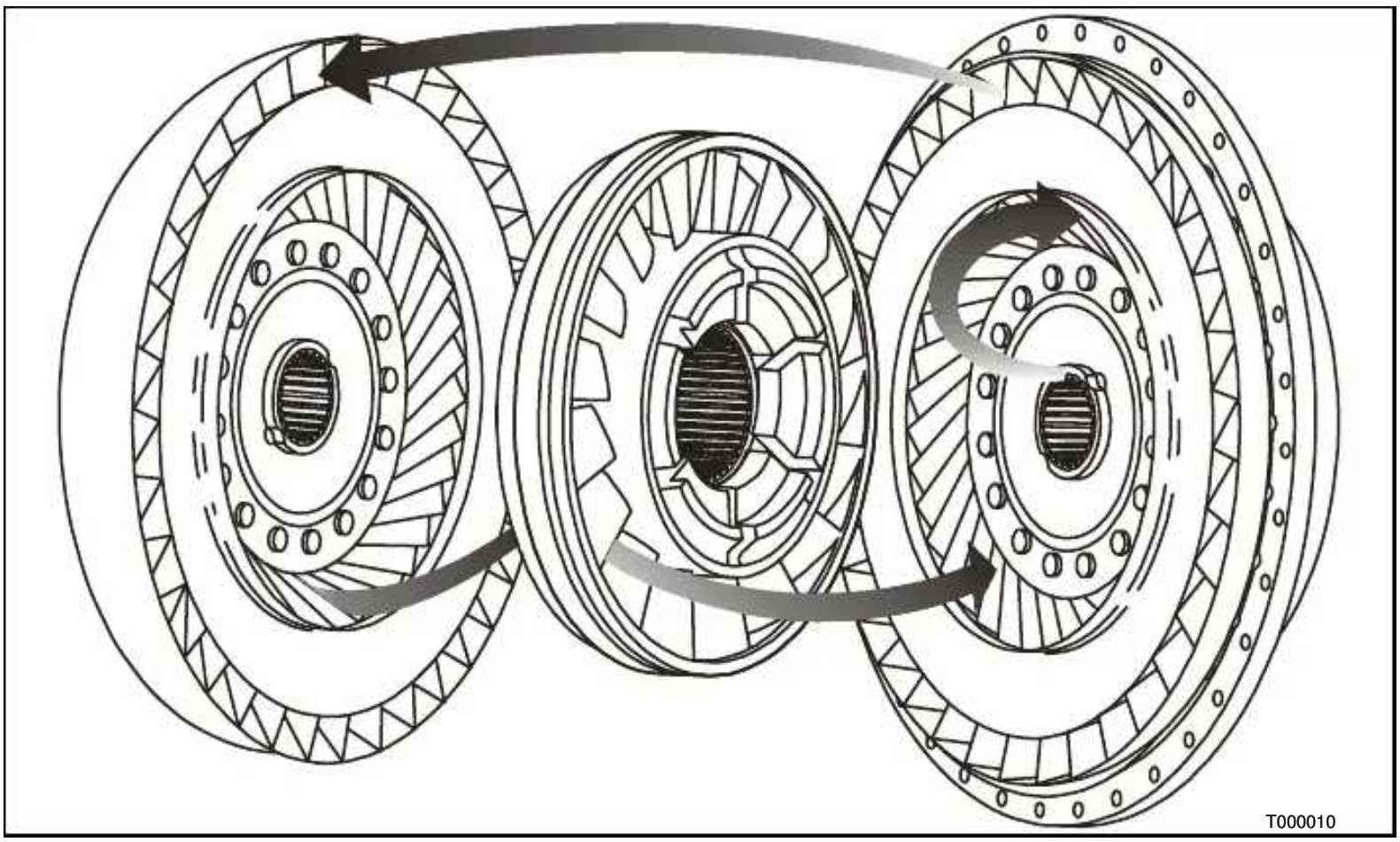

- Vortex flow occurs when the stator is in the locked position.
- The turbine is still stalled or moving slowly.
- Fluid exiting the turbine strikes the front face of the stator blades.
- This locks the stator
- The locked stator directs fluid back to the pump at an accelerated rate.
- This helps the pump increase torque by adding an extra “**push**.”

Rotary Flow

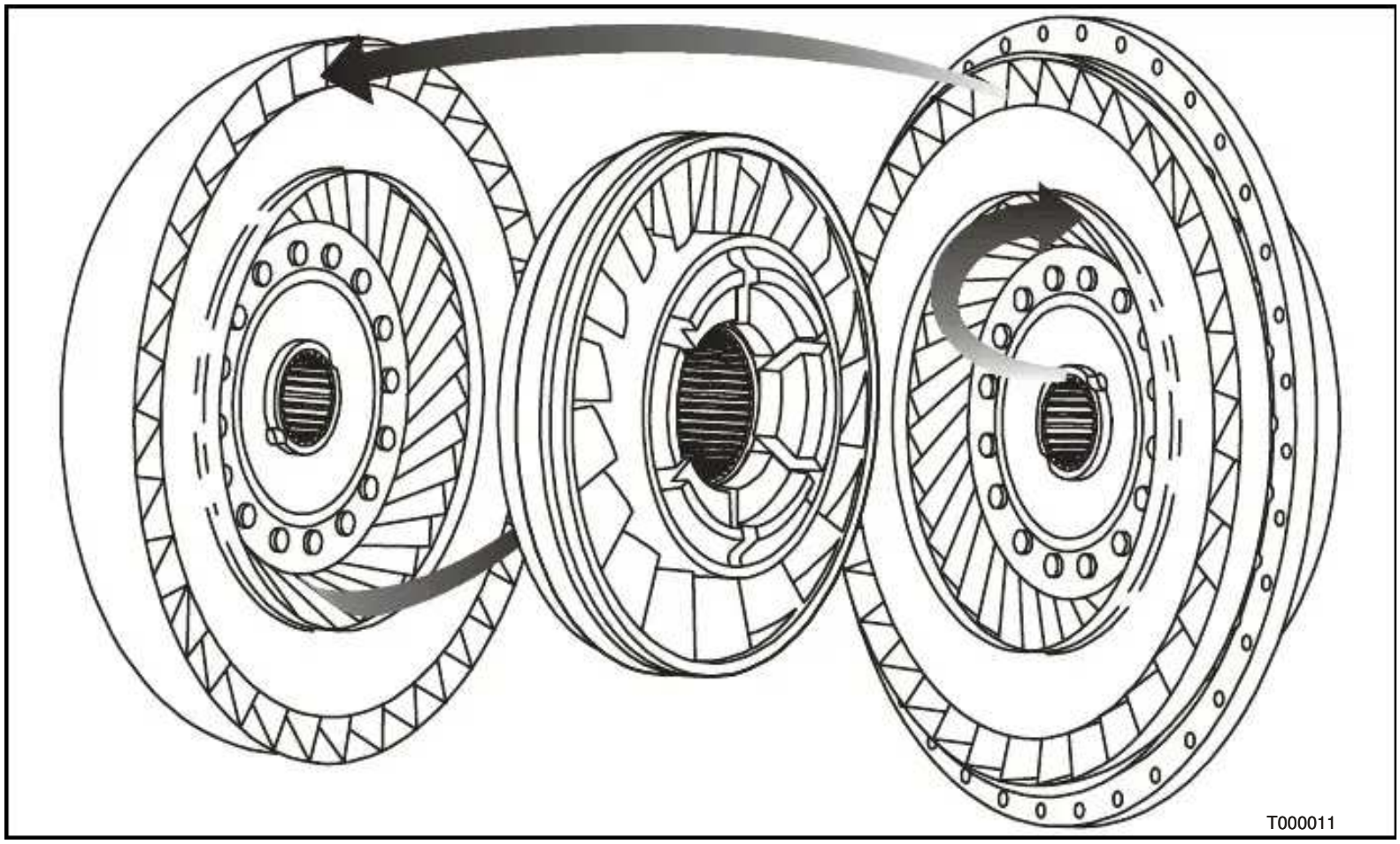

Rotary flow occurs when the stator is in the freewheeling position.

As the turbine begins to rotate and its speed increases, the fluid exiting the turbine strikes the back of the stator blades.

- This frees the one-way clutch and allows the stator to rotate.
- The fluid flow through the stator becomes much smoother and slowly ceases.
- This eliminates the torque increase.

LOCK-UP CLUTCH OPERATION

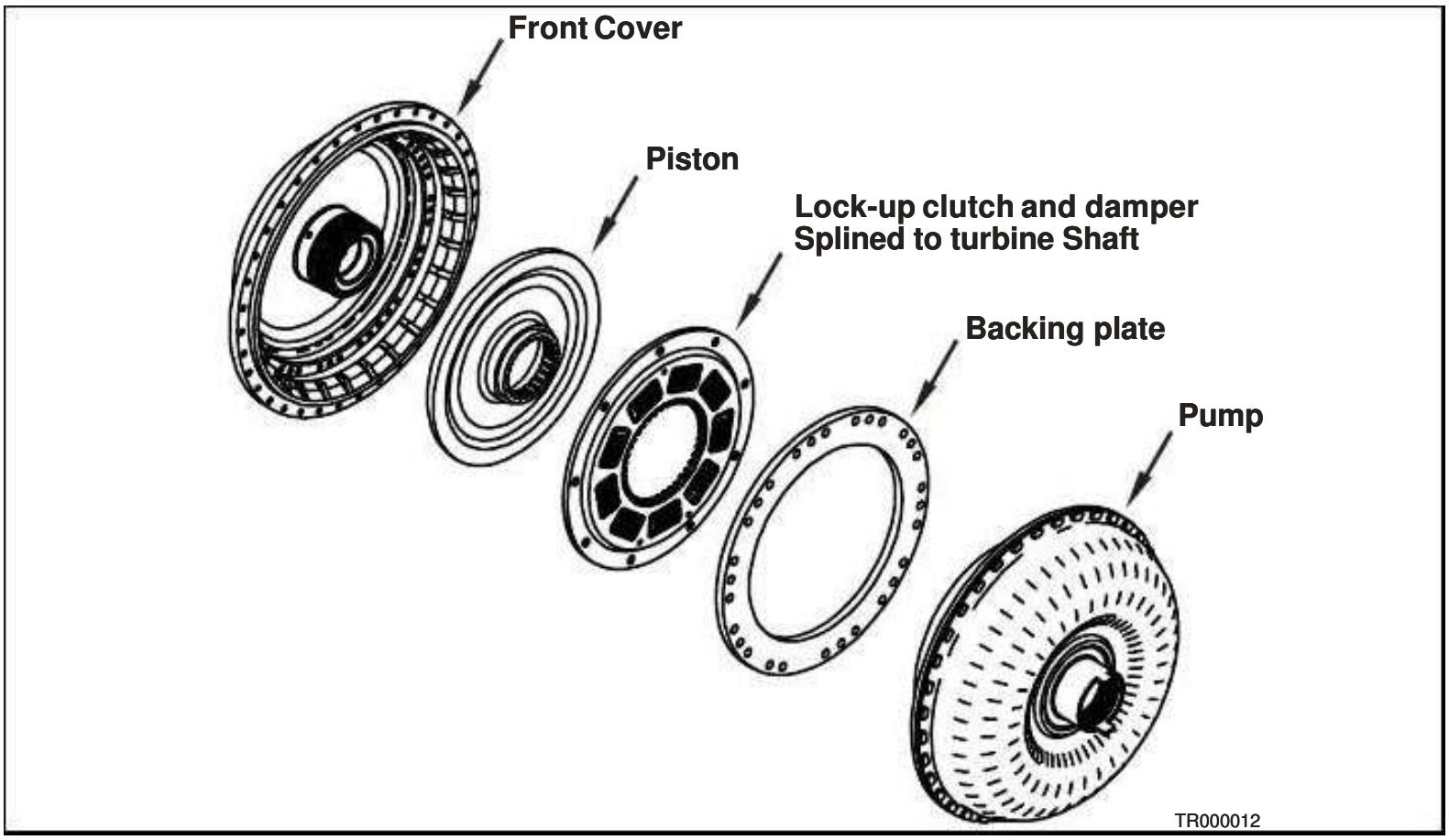

The torque converter's fluid coupling will never allow turbine speed to equal engine speed.

- Once rotary flow has been achieved and certain speed and range requirements are met, the torque converter attains "lock-up."
- This physical connection between the converter turbine and pump allows the turbine to rotate at engine speed.

Lock-up clutch components include:

- The backing plate always rotates at engine speed.
- A torsional damper and lock-up clutch plate assembly - located next to the backing plate. It's splined directly to the turbine.
- The lock-up clutch piston - located inside the converter front cover.
- It's splined to the converter front cover and always rotates at engine speed.
- Hydraulic fluid forced between the front cover

Stall Testing

Stall testing is performed to determine whether a power complaint is due to an engine problem or transmission malfunction.

Stall speed is the maximum engine RPM attainable when the engine is at full throttle and when the torque converter turbine is not moving, or "stalled."

During stall test, compare actual engine speed at full throttle stall with established engine manufacturer's specifications

Stall Test Procedure

To bring oil temperature up to stall testing temperature:

- Before starting check that the oil on the dipstick is within the safe operating band.

and lock-up clutch piston causes the piston to move. This “sandwiches” the clutch plate between the piston and backing plate, forcing the clutch plate to rotate at engine speed.

- Since the clutch plate is splined to the turbine, the transmission’s input equals engine RPM.

- Place chocks in front and behind wheels.
- Ensure that no person is working on or under the machine.
- Start the engine and let it idle.

- If Prolink is available connect it, select “**Diagnostic Data**” and scroll to “**sump temperature**”. If no Pro-Link is available the MDU can be used by selecting “**Actual Values** “and pressing “**Select**” and then “**Next**”, taking you to **“Transmission values”**. Press “**select**” and this will bring you to **“Transmission Temp”**. The transmission sump temperature must be monitored at all times during stall test.
- 6. Apply the park brake.
- 7. Let the air pressure build up until the low air pressure buzzer goes off.
- 8. Push the service brake pedal down and keep it down.
- 9. Select first gear.
- 10. Push accelerator pedal until engine is running at 1000RPM and keep at this RPM for no longer than 15 - 20 seconds.
- 11. Remove foot from accelerator pedal and select neutral.
- 12. Push accelerator until engine is running at 1500RPM and hold for approximately 30 seconds. (This will allow the oil to circulate, preventing a large temperature difference within the pump, thus preventing any damage to the pump).
- 13. Remove foot from accelerator pedal.
- 14. Repeat steps 9 to 13 until the sump temperature stabilizes around 70 ºC - 80 ºC (160 ºF- 175 ºF).

Checking of stall RPM:

- 1. Bring sump temperature as described above.
- 2. Select first gear and apply foot brake pedal and keep it down.
- 3. Push accelerator pedal all the way down.
- 4. After 10 - 15 seconds the RPM will stabilize.(Do not exceed 20 seconds).
- 5. This stabilised RPM will be the stall RPM. (Refer to table:1on the next page.)
- 6. Remove foot from accelerator pedal.
- 7. Select neutral. Accelerate to 1500RPM for 2 minutes to cool the transmission.
- 8. Let engine idle for at least 1 minute before switching off.

NOTE:1. Never stall for longer than 20 seconds.
2. If you have a prolink available the optimum range to stall in is fourth range.
3. Always refer to latest service bulletin for stall speed specifications.

B40D/B35D STALL SPEEDS

Model	Low idle	High idle	Stall speed
B40D	600 rpm	2240 rpm	1637 rpm
B35D	600 rpm	2240 rpm	1596 rpm

Analysing Stall Test Results

If stall test readings are 150 RPM higher or lower than specifications...

- The stall test readings are acceptable.
- Stall test readings may vary slightly above or below specifications, depending on ambient temperature, altitude, tachometer variations and other conditions.

If stall test readings are 200 RPM or more below specifications...

- The engine may be down on power.
- The engine may not be attaining full fuel.

If stall test readings are extremely low (about 30% lower than specifications...)

- The engine may be severely down on power.
- The engine may not be attaining full fuel.
- The converter stator may be freewheeling.

If stall test readings are 200 RPM or more above specifications...

- The transmission may have slipping clutches.
- Transmission oil level might be too low or high.
- Converter out pressure may be too low due to internal transmission problem.

If stall test readings are normal, but there are high converter out temperatures after cool down...

- The converter stator may be stuck.
- The transmission cooling system may not be operating properly.

Trouble Shooting A Freewheeling Stator

A freewheeling stator can cause extremely low stall speeds.

- To verify a freewheeling stator prior to tear down, road test the vehicle.
- If the vehicle has no power at low speed, but performs normally at high speeds, the stator may be freewheeling.
- Elevated oil temperatures or no full-throttle upshifts can also indicate a freewheeling stator.

Troubleshooting A Stuck Stator

A stuck stator can cause high converter out temperatures after cool down, despite normal stall test readings.

- A stuck stator can also prevent the vehicle from reaching its top speed and/or transmission overheating at highway speeds.
- To verify a stuck stator prior to tear down, stall test as follows:
- Stall until converter out temperature reaches 120-130°C (250- 270 ° F.)
- Place the transmission in neutral, then accelerate the engine to between 1200 and 1500-RPM for 2 to 3 minutes.
- If the converter out temperature doesn't drop, the stator may be stuck or the engine/ transmission cooling system may be malfunctioning.

If tests confirms that the converter stator is suspect, remove the transmission, disassemble the torque converter and inspect the stator, springs, rollers and race.

Stall Torque Ratio

Stall torque ratio reflects the amount of turbine shaft torque the converter develops compared to the amount of torque the engine develops.

- The engine cooling system may not be operating properly.

Example: If the converter configuration provides a 2:1 stall torque ratio, the torque converter is capable of delivering twice the engine's torque to the transmission gearing.

NOTE:The Stall Torque Ratio Of The B40D Is 1.9: 1

PLANETARY GEARS AND POWER FLOWS

Planetary Gear Sets

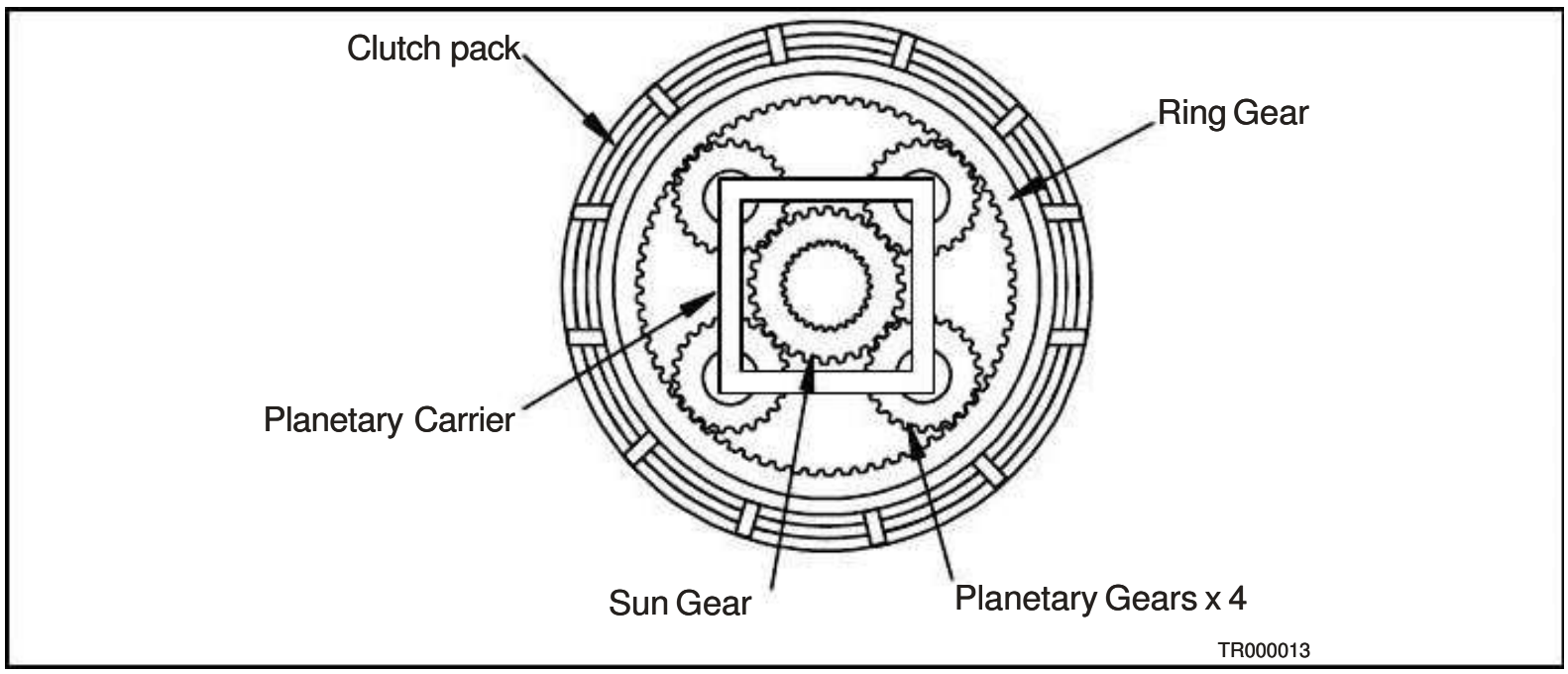

The HD transmission uses three sets of planetary gears.

- Understanding basic planetary gear operation is critical to understanding the HD's operating principles.
- Planetary gear sets consist of a sun gear, planetary pinion gears (held by a carrier) and a ring gear.

Gear relationships:

- When two gears with external teeth mesh, their rotation is opposite each other.
- Example - the sun gear and pinion gears.
- When a gear with external teeth meshes with a gear with internal teeth, they rotate in the same direction.
- Example - the pinion gears and the ring gear.
- These gear relationships provide the basis for planetary gear operation.

THE BASIC LAWS OF PLANETARY GEAR SETS

SUN	CARRIER	RING	SPEED	TORQUE	DIRECTION
INPUT	OUTPUT	HELD	MAXIMUM REDUCTION	INCREASE	SAME AS INPUT
HELD	OUTPUT	INPUT	MINIMUM REDUCTION	INCREASE	SAME AS INPUT
OUTPUT	INPUT	HELD	MAXIMUM INCREASE	REDUCTION	SAME AS INPUT
HELD	INPUT	OUTPUT	MINIMUM INCREASE	REDUCTION	SAME AS INPUT
INPUT	HELD	OUTPUT	REDUCTION	INCREASE	OPPOSITE OF INPUT
OUTPUT	HELD	INPUT	INCREASE	REDUCTION	OPPOSITE OF INPUT

NOTE: When any two members are held together speed and direction are same as input. The ratio will be 1:1

When one planetary component is held and another is rotated, or "**input**," the third member becomes an output mechanism.

Depending on which components are held and input, the planetary gear set can develop various output ratios:

- Decrease input speed
- Increase input speed
- Provide direct, 1:1 drive
- Create reverse

CLUTCHES

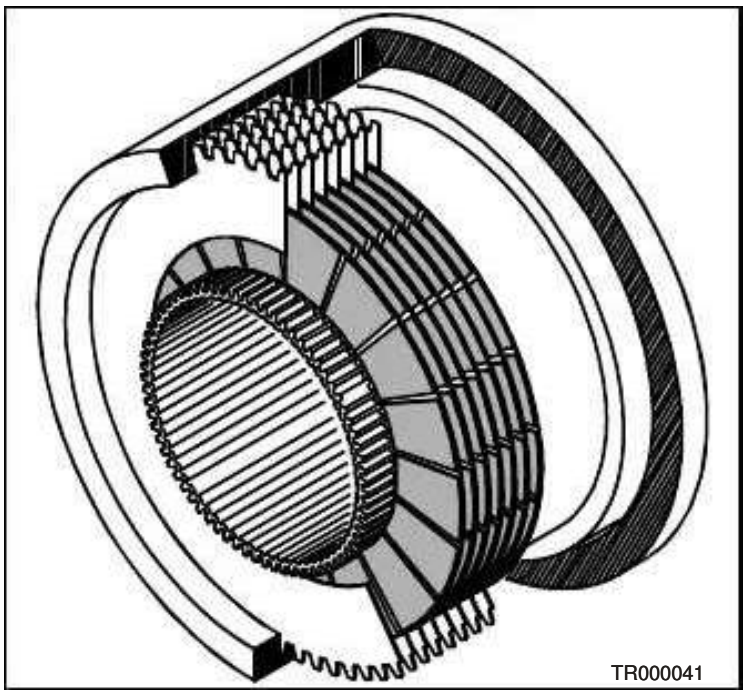

Clutches provide the input and holding power planetary gear sets required for operation.

- Clutches in the HD transmission can be either rotating or stationary

- Rotating clutches supply rotational input to other shafts or components.
- The HD transmission's rotating clutches are located in the rotating clutch module.

- Stationary clutches hold components in place, allowing other components to be input and output.
- The HD has three stationary clutches that hold planetary gear components.
- Clutches consist of two intertwined sets of clutch plates and a piston.
- Two kinds of plates are used - fibre, "**friction**," plated and steel, "**reaction**" plates.
- Plates are alternated in the clutch assembly so that they sandwich each other.
- One set of clutch plates is splined to an inner component, the other is splined to an outer component (The housing).
- Even though the plates are intertwined, they rotate independently, when not applied.
- The clutch assembly has a piston and spring assembly.
- When the clutch is applied, the piston forces The intertwined plates together as one unit.
- When the clutch is released, the spring assembly returns the piston.
- If one of the components splined to the clutch plates is stationary, the clutch is a "**stationary clutch**".
- If both components splined to the clutch plates are capable of rotating the clutch is a "**rotating clutch**."

HD TRANSMISSION PLANETARY CONFIGURATION

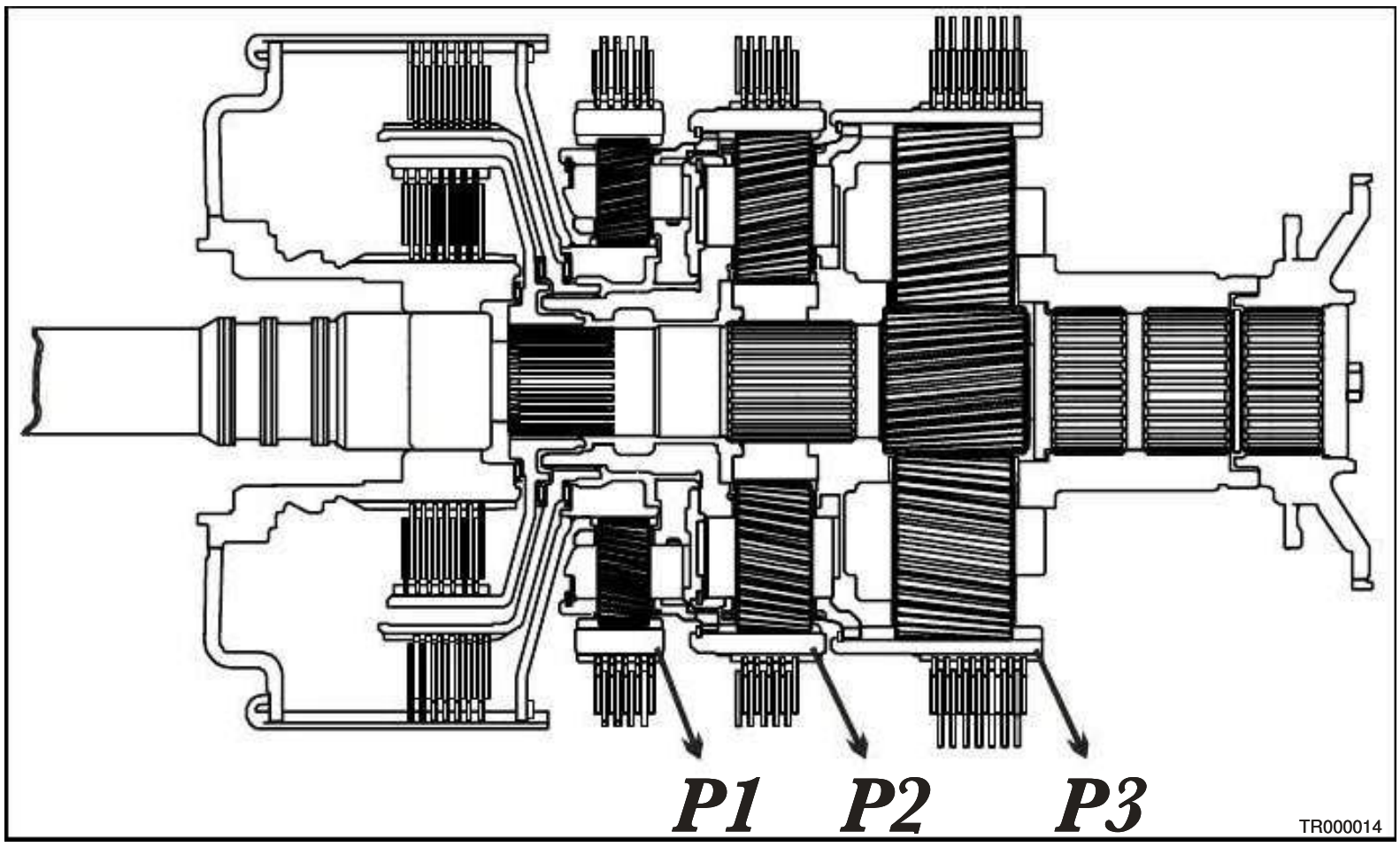

The HD's planetary gear sets are labelled P1, P2 and P3.

P3 Planetary configuration:

- The P3 carrier is connected directly to the

P2 Planetary configuration:

output shaft.
- The P3 sun gear is part of the main shaft module.
- The P3 ring gear is connected directly to the P2 carrier.
- The P2 carrier is connected directly to the P3 ring gear.
- The P2 sun gear is part of the main shaft module.
- The P2 ring gear is connected directly to the P1 carrier.

P1 Planetary configuration:

- The P1 carrier is connected directly to the P3 ring gear.
- The P1 sun gear is connected directly to the rotating clutch module (it always rotates at turbine speed).
- The P1 ring gear is not connected to any planetary components.

HD TRANSMISSION CLUTCH CONFIGURATION

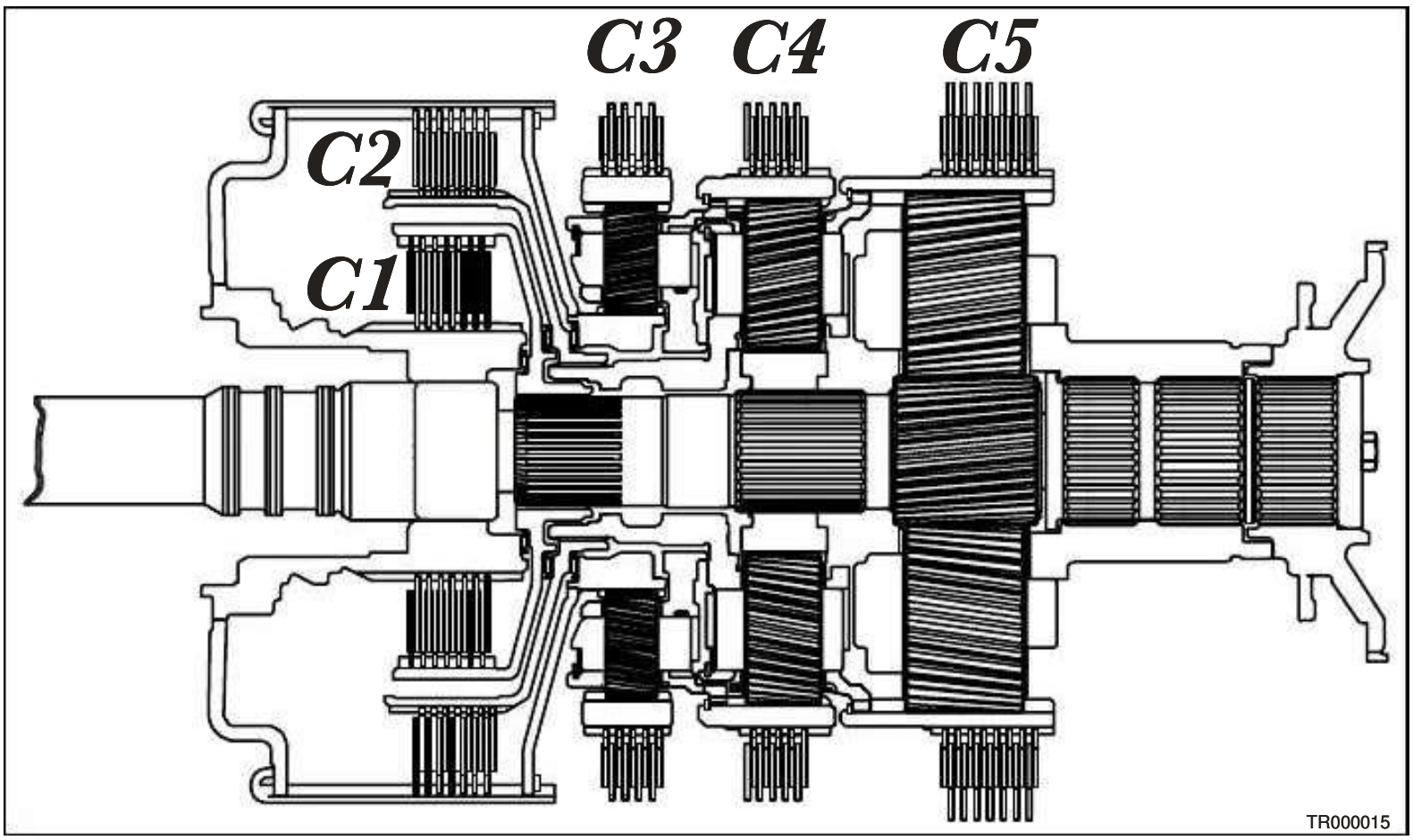

Each ring gear has a corresponding clutch.

- Clutches are labelled C5 (holds the P3 ring gear), C4 (holds the P2 ring gear) and C3 (holds the P1 ring gear).
- Two rotating clutches are located inside the rotating clutch module.
- C1 is the smaller inner clutch - when applied, it transmits rotational input to the main shaft.
- C2 is the larger outer clutch - when applied, it rotates the P2 carrier.

CLUTCHES	C1	C2	C3	C4	C5
NEUTRAL					X
FIRST	X				X
SECOND	X			X	
THIRD	X		X		

THIRD	X		X		
FOURTH	X	X			
FIFTH		X	X		
SIXTH		X		X	
REVERSE			X		X

LEFT BLANK INTENTIONALLY

Transmission Cross Sectional Diagram

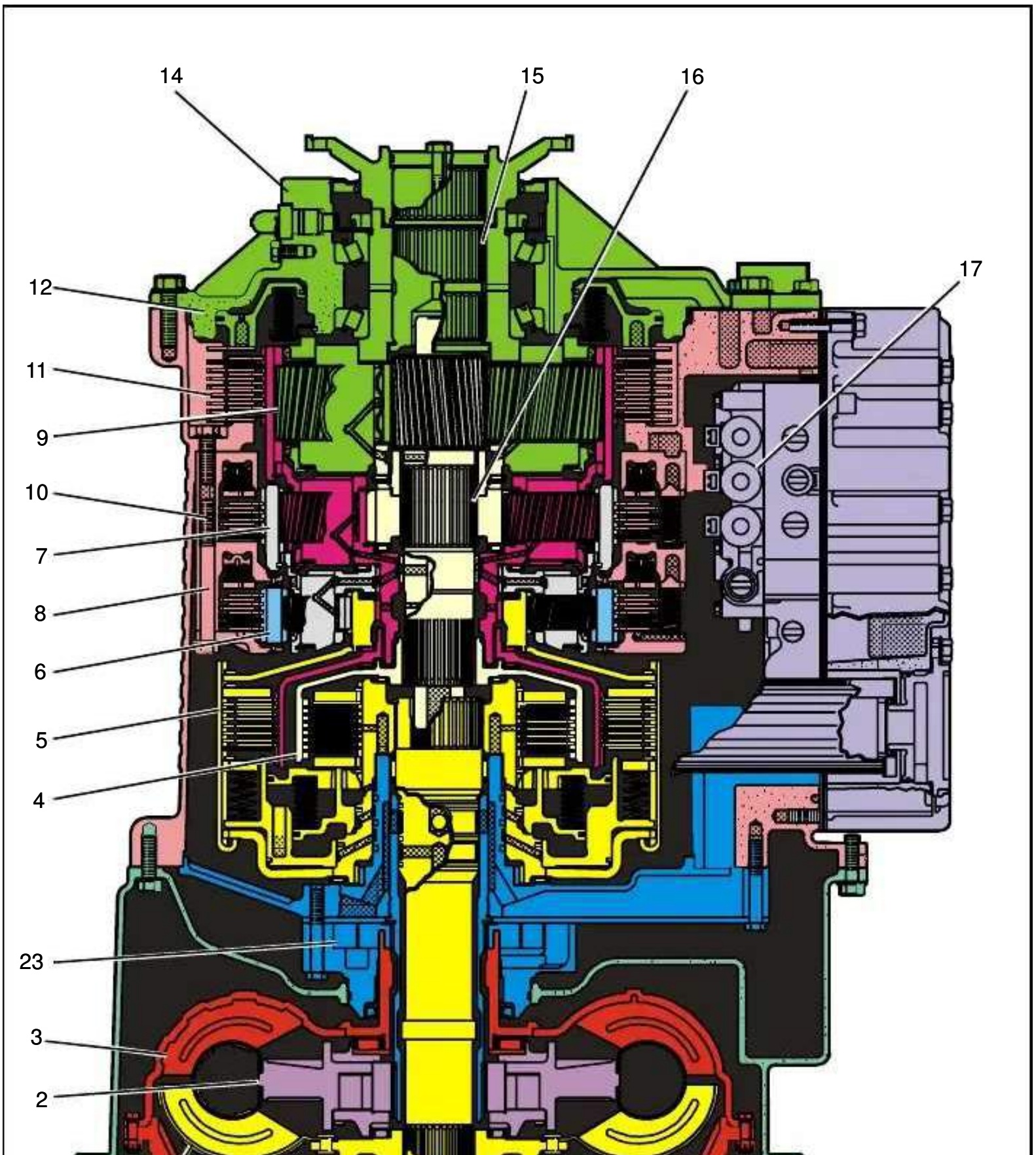

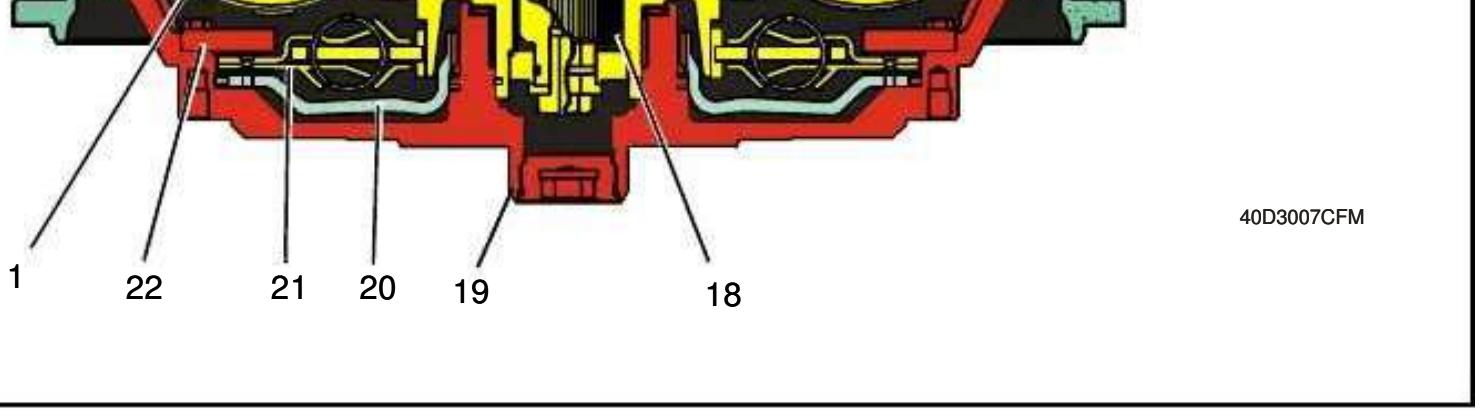

1. Torque Converter Turbine.
2. Torque Converter Stator.
3. Torque Converter Pump.
4. C1 Clutch.
5. C2 Clutch.
6. P1 Planetary.
7. P2 Planetary.
8. C3 Clutch.
9. P3 Planetary.
10. C4 Clutch.
11. C5 Clutch.
12. Retarder Stator.
13. Retarder Rotor (Not Shown).
14. Retarder Housing.
15. Output Shaft.
16. Main Shaft.
17. Clutch Solenoid.
18. Turbine Shaft.
19. Engine Input.
20. Lockup Clutch Piston.
21. Lockup Clutch Plate and Damper.
22. Lockup Clutch Backing Plate.

POWER FLOW

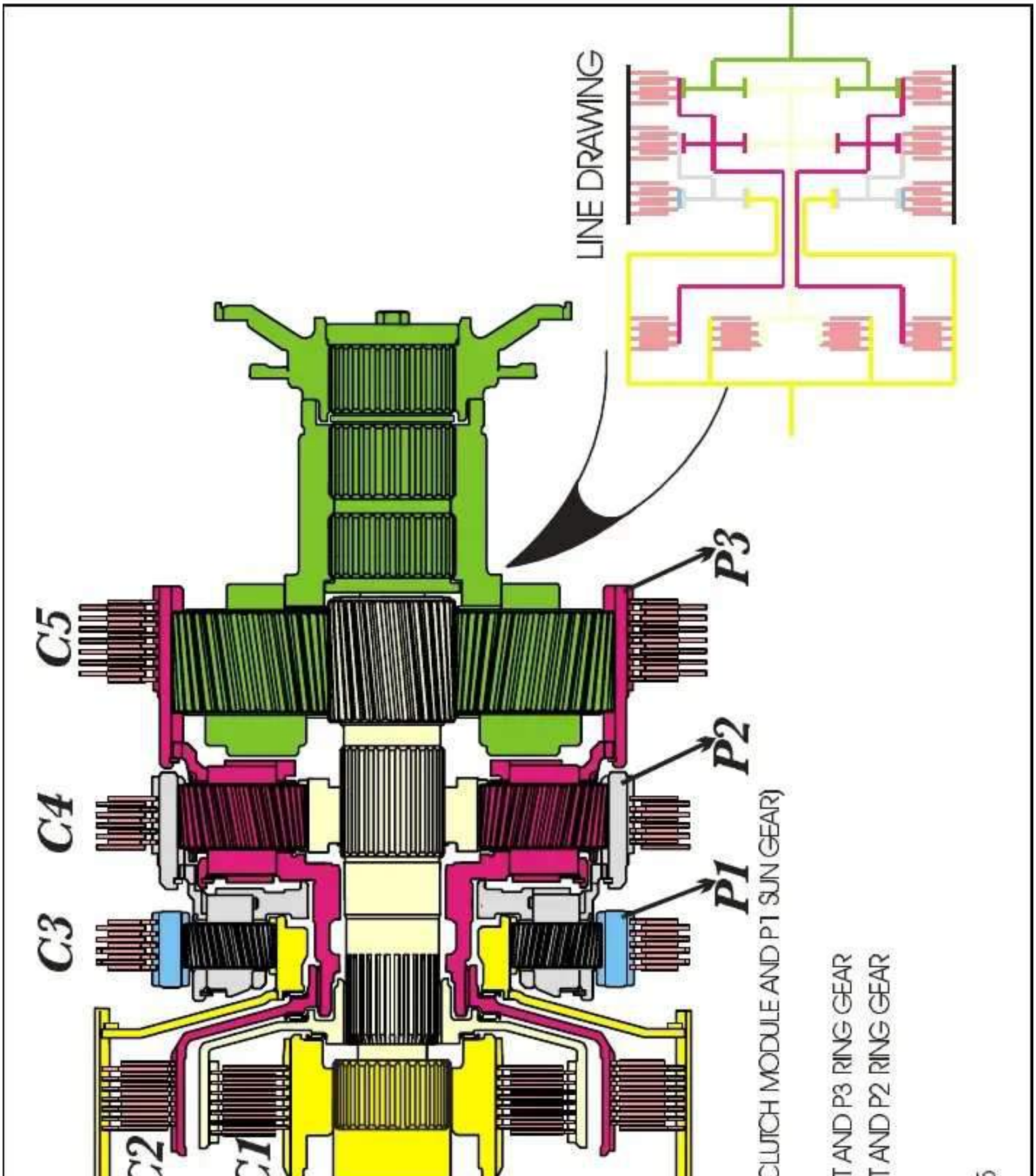
LINE DRAWING
C5
C4
C3
C2
C1
P3
P2
P1
CLUTCH MODULE AND P1 SUN GEAR)
T AND P3 RING GEAR
T AND P2 RING GEAR

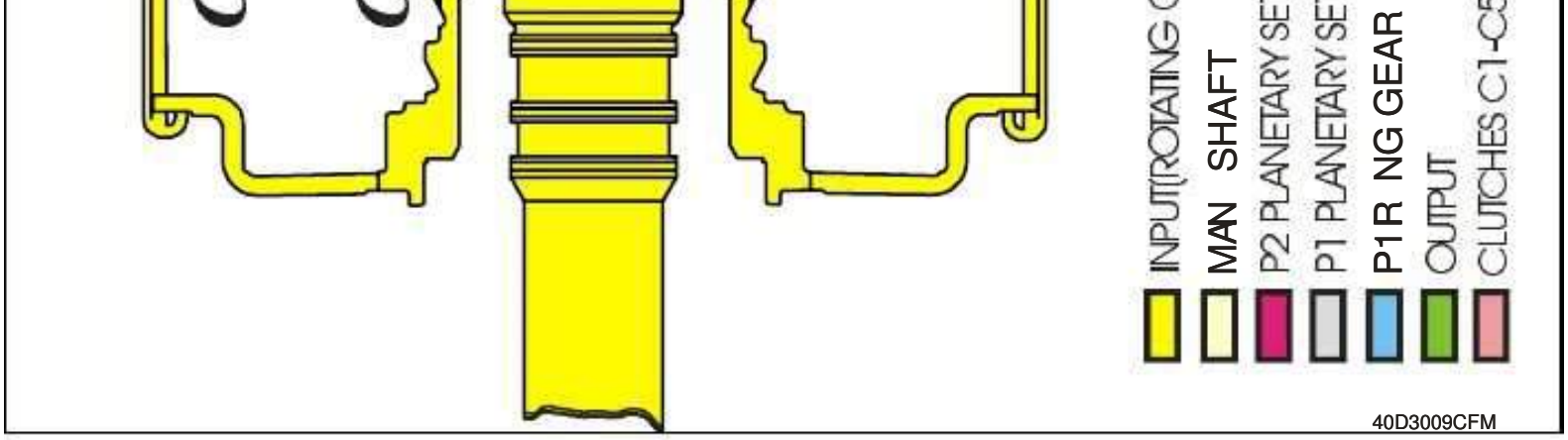

Neutral Power Flow

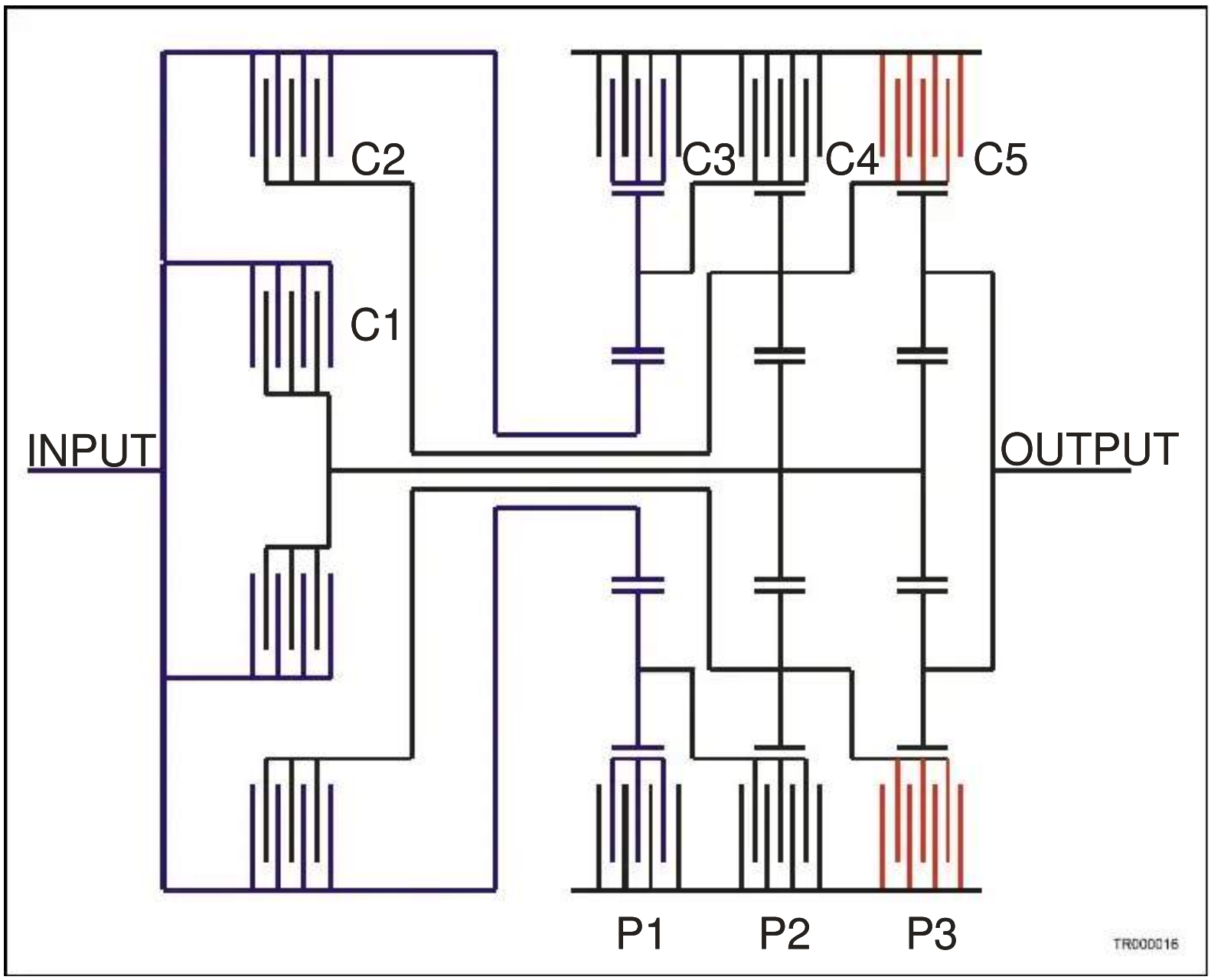

In neutral, only C5 clutch is applied

- Rotational power from the torque converter is not transmitted beyond the rotating clutch module and the P1 planetary sun gear.
- If the vehicle is rolling while in neutral, different clutches may be applied.
- This controls the speed of rotating components under varying conditions.
- Depending on output shaft speed, the transmission may attain N1, N2, N3 or N4 - this corresponds to clutches C5, C4, C3 and C4 respectively.

1st Range Power Flow

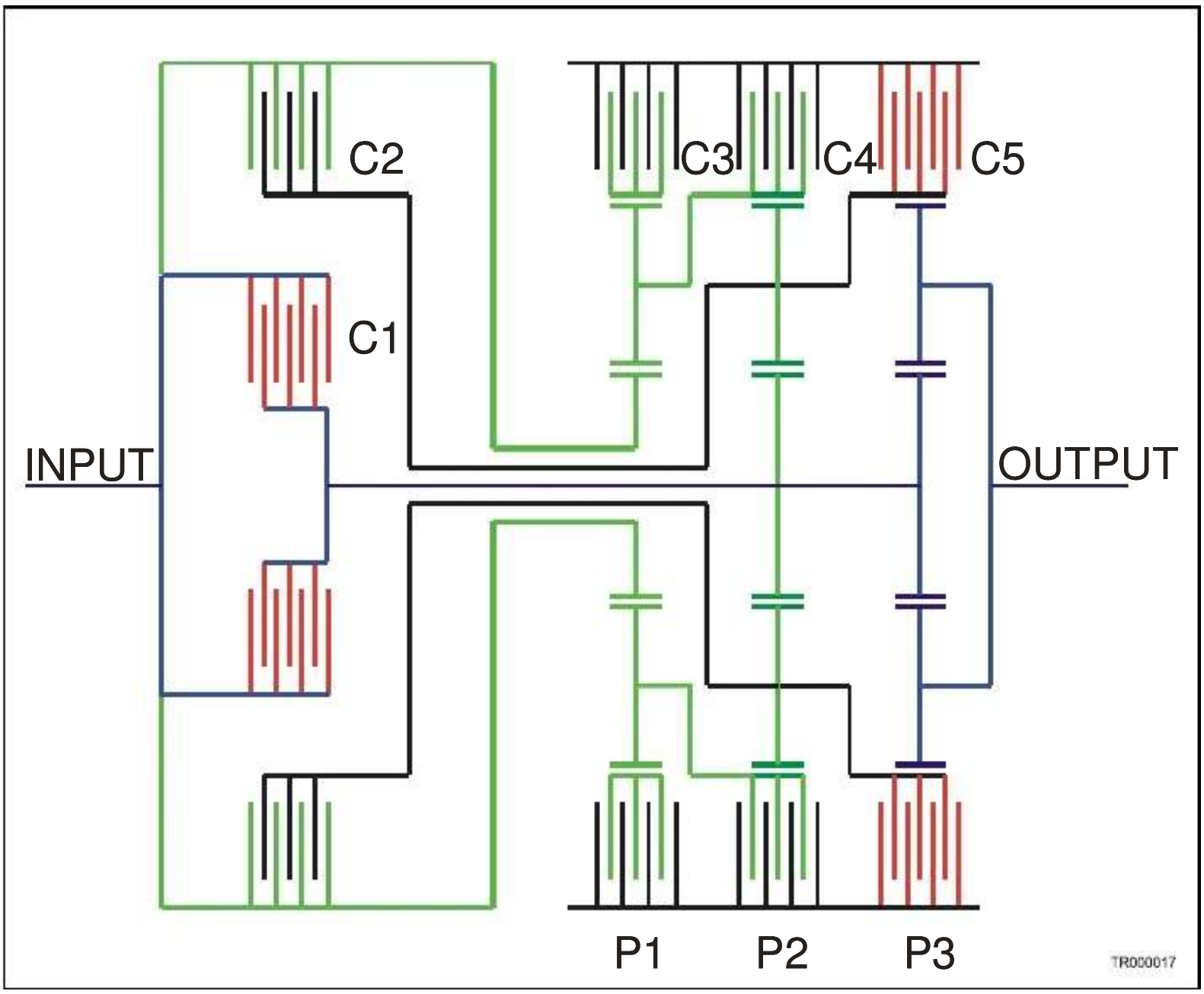

In first range, the C1 and C5 clutches are applied.

- C1 locks the turbine shaft and main shaft together.
- The P3 sun gear is part of the main shaft module, so it becomes input for the P3 Planetary set.
- C5 holds the P3 ring gear.
- Since the P3 sun gear is input and the P3 ring gear is held, the P3 carrier becomes the output.
- The P3 carrier is splined directly to the output shaft.

2nd Range Power Flow

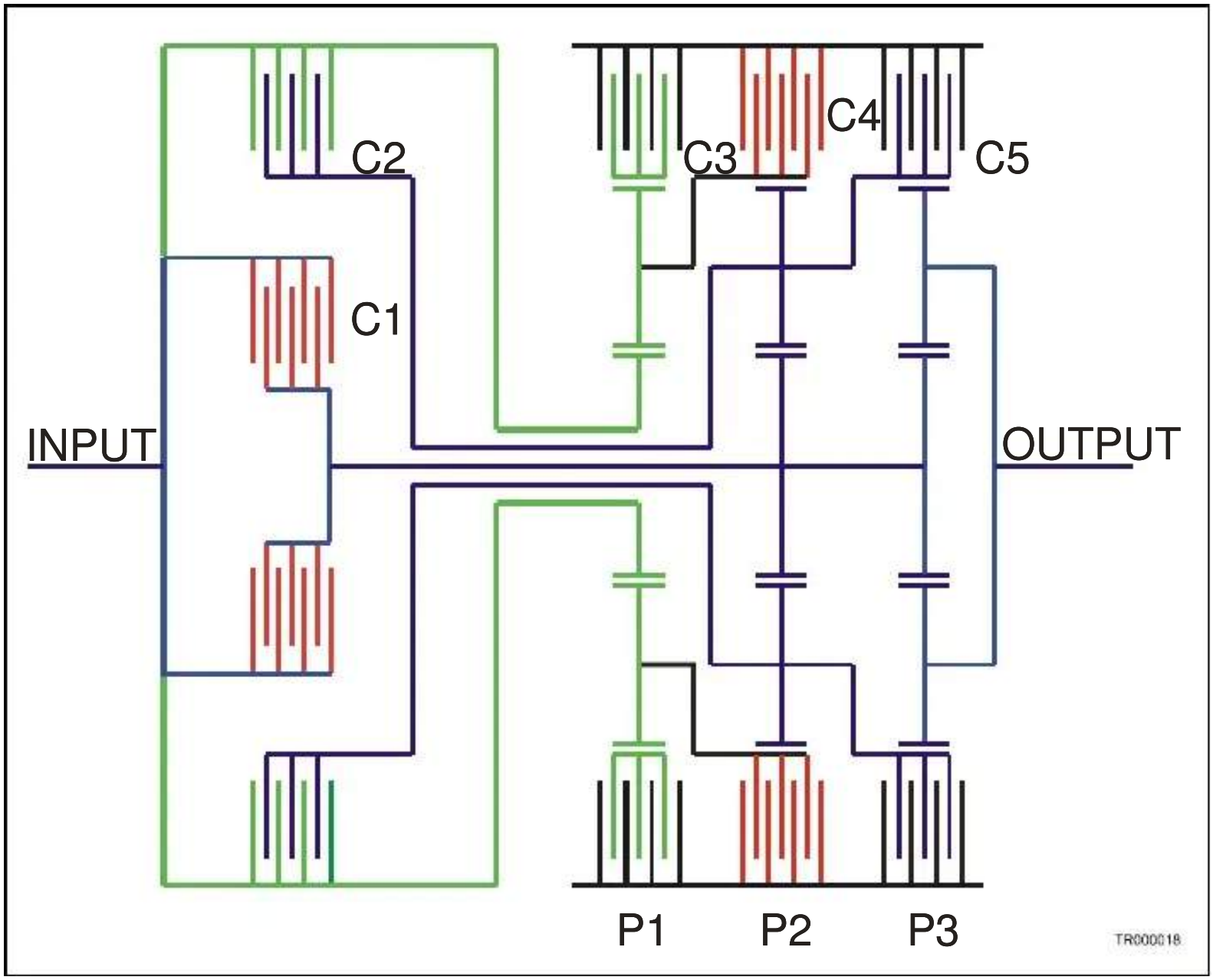

In second range, the C1 and C4 clutches are applied and the P2 and P3 planetary sets work together to provide the appropriate output.

- The C1 clutch locks the turbine shaft and main shaft together.
- This drives the P2 sun gear.
- The C4 clutch holds the P2 ring gear.
- Since the P2 sun gear is input and the P2 ring gear is held, the P2 carrier becomes output.
- The P3 sun gear is splined to the main shaft, so it's rotating.
- The P3 ring gear is splined to the P2 carrier, so it's rotating, but at a slower rate than the P3 sun gear.
- The P3 ring gear acts like a held member, and the P3 sun gear becomes input.
- The P3 carrier becomes output, and it's splined to the output shaft.

3rd Range Power Flow

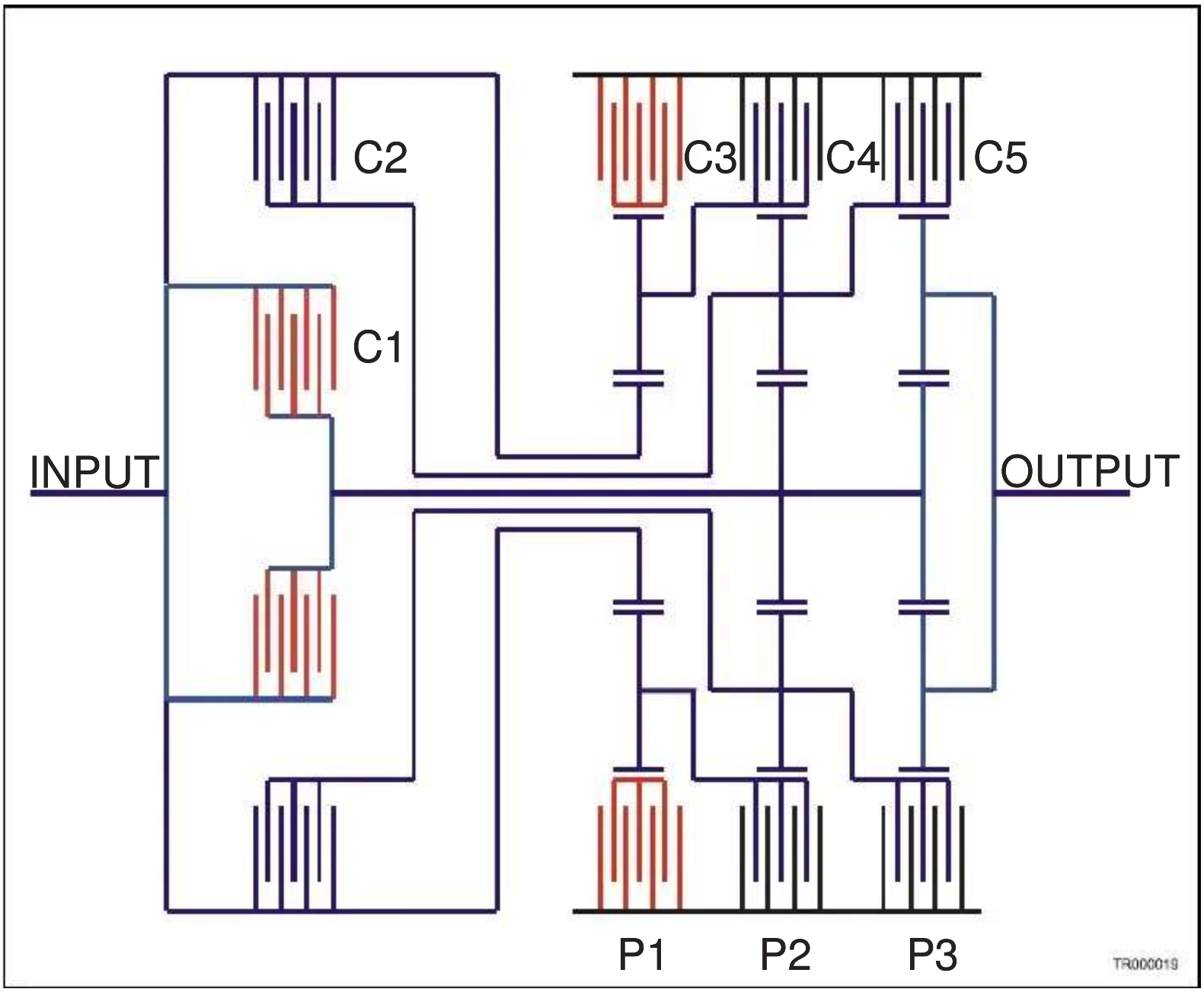

In third range C1 and C3 clutches are applied and all three planetaries work together to provide the appropriate output.

- The C1 clutch locks the main shaft to the turbine shaft, and the rotating clutch module rotates the P1 ring gear.The C3 clutch holds the P1 ring gear.
- Since the P1 sun gear is input and the P1 ring gear is held, the P1carrier becomes output.The P2 sun gear is rotating with the
- Since the P2 ring gear is rotating slower than the P2 sun gear, it acts like a held member. The P2 sun gear is input , the P2 ring gear is held so the P2 carrier becomes output.The P3 sun gear is rotating with the main shaft.
- The P3 ring gear is splined to the P2 carrier, so it's rotating with the P2 carrier, at a slower speed than the P3 sun gear.
- The P3 sun gear is input, the P3 ring gear acts like a held member, and the P3 carrier (which is splined to the output shaft) becomes output

main shaft.
- The P2 ring gear is splined to the P1 carrier, so its rotating.

4th Range Power Flow

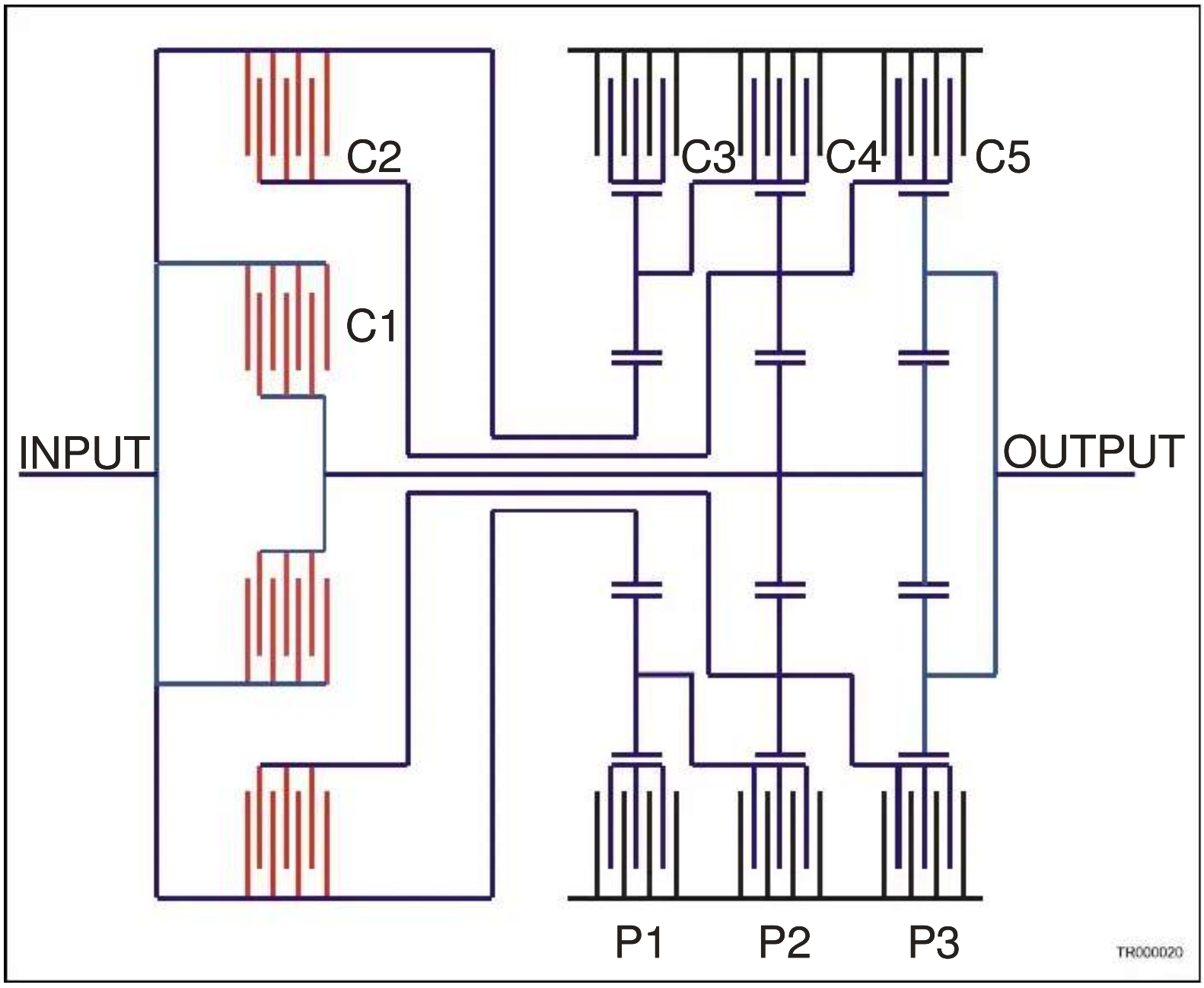

In fourth range, both rotating clutches (C1 and C2) are applied.

- The C1 clutch locks the turbine shaft to the main shaft.
- The C2 clutch locks the turbine shaft to the P2 carrier.
- Since no stationary clutches are applied, all three planetary sun gears, carriers and ring gears rotate the same speed and direction as the turbine shaft.
- The P3 carrier is the output and it's splines directly to the output shaft.
- Since all components are rotating together, the fourth range final gear ratio is 1 to 1, or direct drive.

5th Range Power Flow

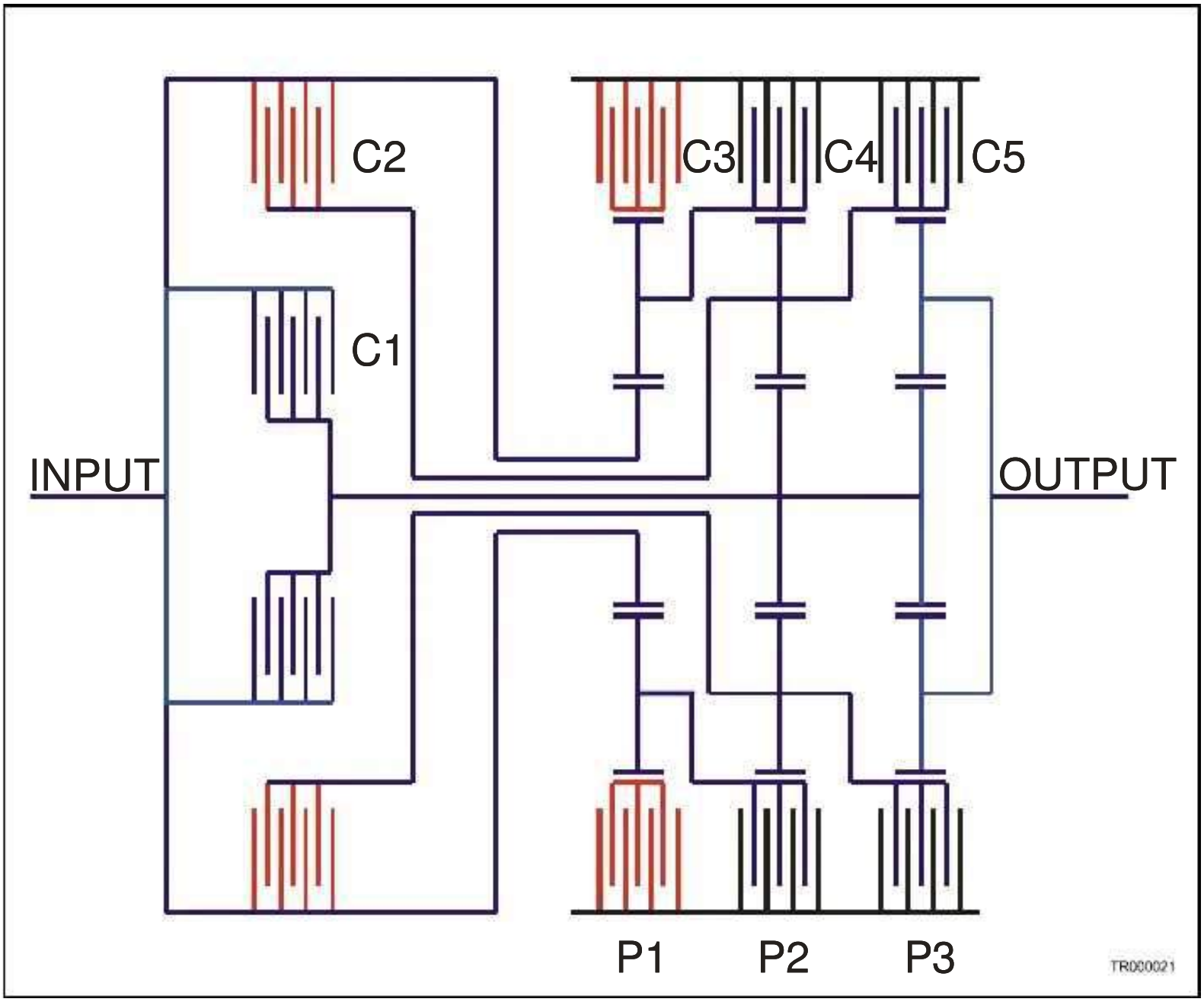

In fifth range, the C2 and C3 clutches are applied and all three planetary sets work together to create the appropriate output.

- The P1 sun gear is rotating with the rotating clutch module.The C3 clutch is holding the P1 ring gear stationary.The P1 carrier becomes output.
- The P2 carrier is rotating at turbine speed (the C2 clutch locks the turbine to the P2 carrier). The P2 ring gear is splined to and rotating with
- The P2 carrier is rotating faster than the P2 ring gear, so it's input and the ring gear acts like a held member.The P2 sun gear acts like a held member.
- The P2 sun gear rotates the main shaft and the P3 sun gear.The P3 ring gear is splined to and rotating with the P2 carrier.
- The P3 sun gear is rotating faster than the P3 ring gear, so the sun gear is input and the ring gear acts a a held member.The P3 carrier

the P1 carrier.

becomes output, and it's splined to the output shaft. This gearing combination creates an overdrive.

6th Range Power Flow

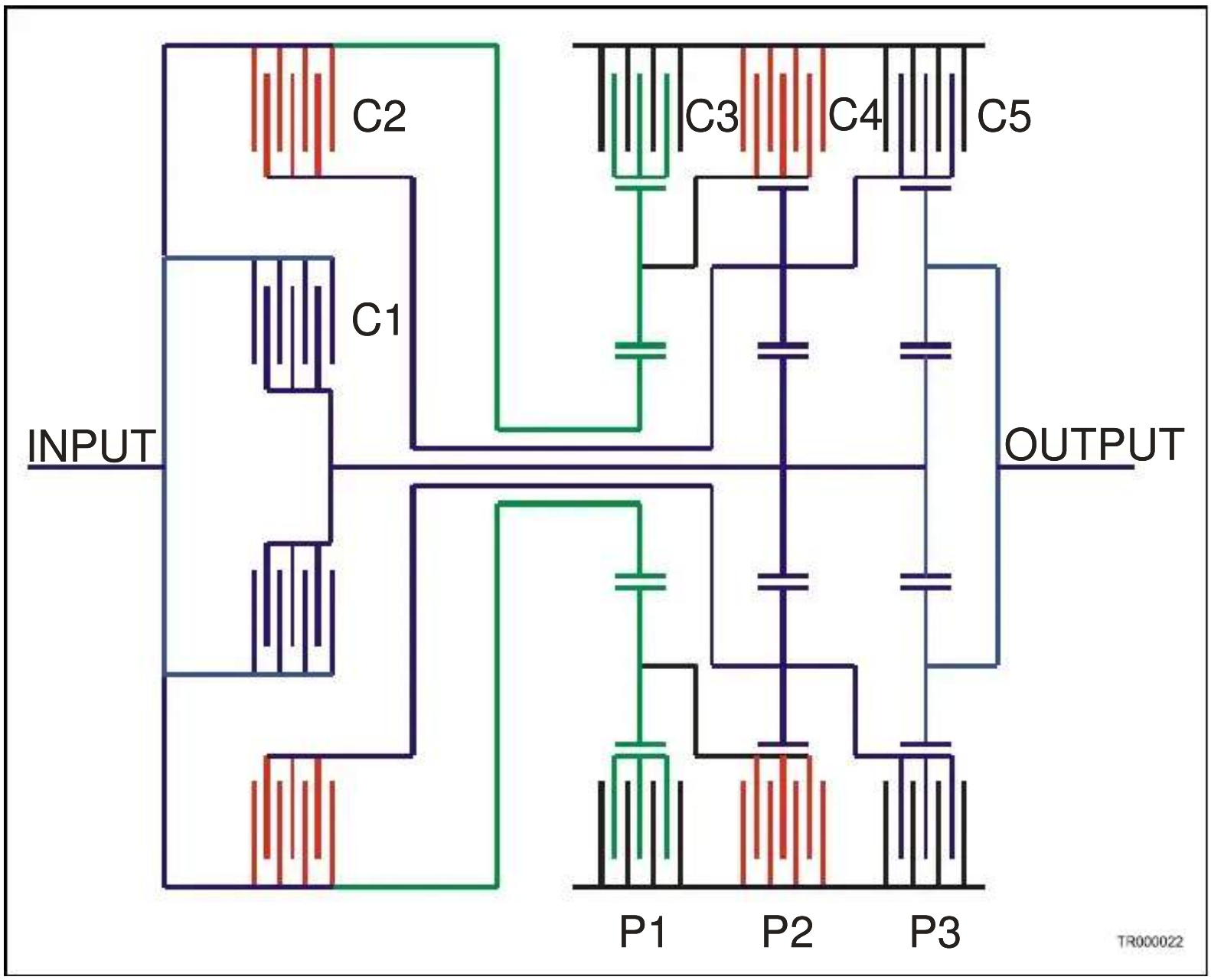

In six range, the C2 and C4 clutches are applied and the P2 and P3 planetary sets work together to create the appropriate output.

- The C2 clutch locks the P2 carrier to the turbine shaft.
- The C4 clutch holds the P2 ring gear.
- Since the P2 carrier is input and the P2 ring gear is held, the P2 sun gear becomes output.
- The P2 sun gear rotates the main shaft and the P3 sun gear.
- The P2 carrier is splined to and rotating the P3 ring gear.
- The P3 sun gear is input, the P3 ring gear acts like a held member.
- The P3 carrier becomes output, and it's splined to the output shaft.
- This gearing combination creates overdrive.

Reverse Range Power Flow

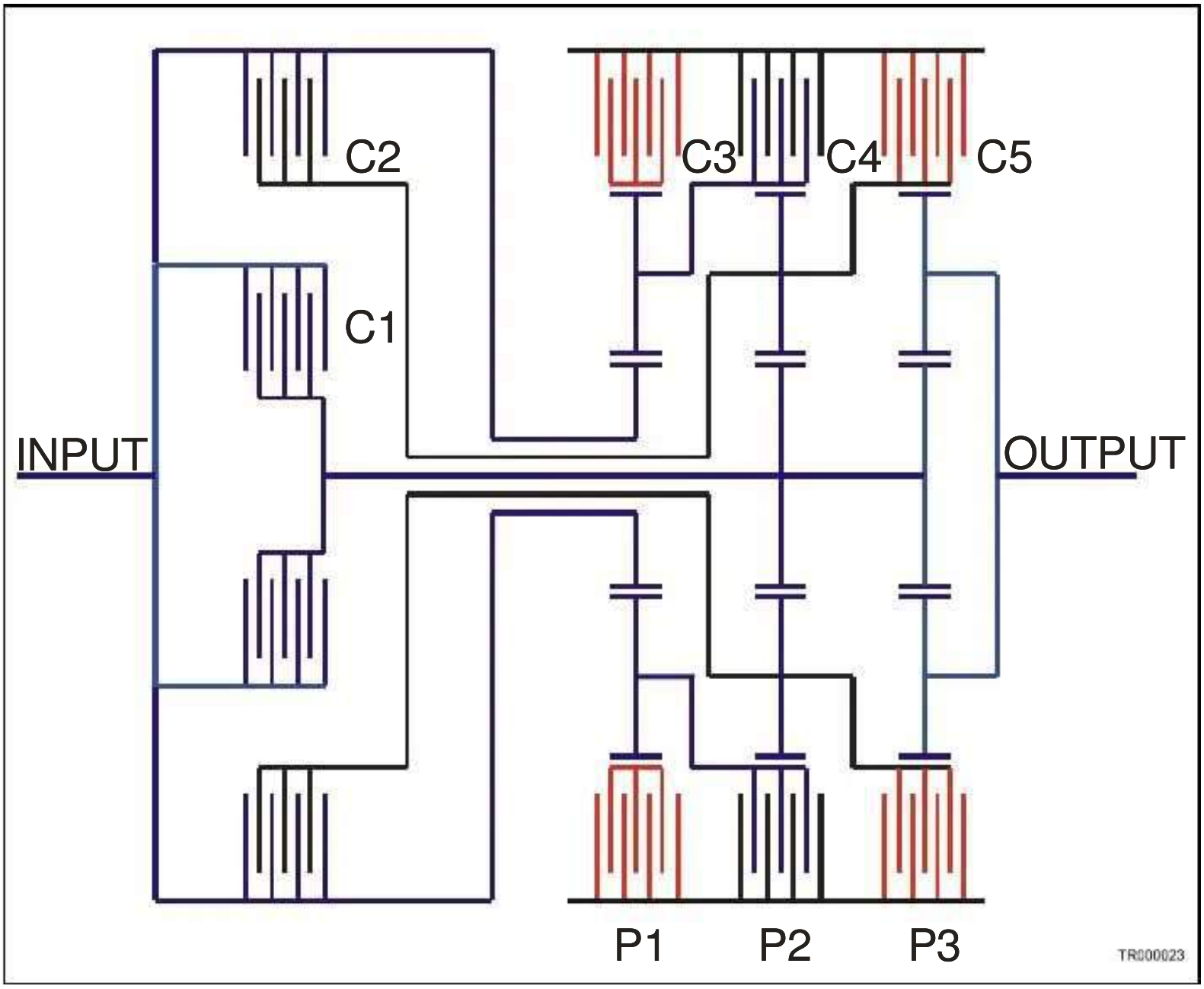

In reverse, the C3 and C5 clutches are applied and all three planetary gears work together to create output.

- The P1 sun gear is rotating with the rotating clutch module. The P1 ring gear is held by the C3 clutch. The P1 carrier becomes output.
- The P1 carrier is splined to the P2 ring gear. The P2 ring gear becomes input for the P2 planetary set.
- The C5 clutch holds the P3 ring gear. T he P3 sun gear rotates opposite (counter-clockwise) the input component's direction. The P2 sun gear rotates the main shaft in the opposite direction (counter-clockwise).
- Since the carrier is the held member, the P2 sun gear rotates opposite (counter-clockwise) the input component's direction. The P2 sun gear rotates the main shaft in the opposite direction (counter-clockwise).
- Since the P3 sun gear rotates with the main shaft, it also rotates in the opposite direction (counter-clockwise). The P3 sun gear becomes reverse input for the P3 planetary set. The P3 ring gear is held by the C5 clutch.
- The P3 carrier becomes reverse output, and

ring gear is splined to the P2 carrier. Since the P2 ring gear is input and the P2 carrier is held, the P2 sun gear becomes output.

it's splined to the output shafts.

HYDRAULIC SYSTEM

System Function

The hydraulic system generates, directs, and controls the pressure and flow of transmission fluid (hydraulic fluid) within the transmission.

Transmission fluid is the power-transmitting medium in the torque converter. Its velocity drives the converter turbine.

Its flow cools and lubricates the transmission. Its pressure operated the various control valves that apply the clutches.

The primary components of the transmission hydraulic system is the transmission fluid, the charging pump, three integral filters, the control module, the breather, the cooler, and the C3 pressure switch.

The hydraulic system circuits are the main pressure circuit, the main control circuit, the torque converter circuit, the cooler lubrication circuit, the clutch-apply circuits, the exhaust circuit, and the exhaust backfill circuit.

The charging pump supplies transmission pressure and flow throughout the hydraulic system.

The charging pump draws fluid through the suction filter from the transmission sump, and pumps the fluid, under pressure, into the hydraulic system through the main filter.

Solenoids and valves, located in the transmission control module, control the flow and pressure of the hydraulic fluid.

Transmission fluid flows to specific clutches to achieve range shifts. Fluid for the cooler/ lubrication circuit flows through the lubrication filter.

The C3 pressure switch, located in the C3 clutch

MAIN-PRESSURE CIRCUIT

The main pressure circuit supplies the primary source of fluid pressure to the hydraulic system.

The main pressure regulator valve controls the pressure in this circuit. The main-pressure regulator valve converts charging pump pressure to main pressure and regulates main pressure based upon input from the overdrive knockdown valve, the converter flow valve, and control main pressure.

The main-pressure regulator valve is held upward by spring force at the bottom of the valve. Main-pressure flows to the top of the regulator valve.

The main-pressure regulator valve is pushed downward when the main fluid pressure reaches a level high enough to overcome the spring force, pressing downward the main-pressure regulator valve and permitting excess fluid to exhaust, reducing main pressure.

This regulated main pressure is routed to seven areas in the hydraulic system. Passages in the control module direct main pressure to the input side of each of the six-solenoid regulator valves and to the control main regulator valve.

Pressure at the output side of each solenoid regulator valve is "**clutch feed pressure**." Pressure at the output side of the control main regulator valve is "**control main pressure**."

Regulator Valves

The TCU controls the solenoids in the control module and the solenoids control the solenoid regulator valve.

The solenoids direct control main pressure to the top of a solenoid regulator valve, causing it to move against its spring.

Control main pressure forces the valve downward against spring force, blocks off the exhaust backfill

circuit, monitors circuit pressure. The TCU receives data from the C3 pressure switch to determine if C3 clutch operations have performed as expected.

An accumulator/relay valve is located ahead of the C3 pressure switch to dampen high-frequency hydraulic pulses in the clutch-apply circuit to prevent early failure of the C3 pressure switch.

circuit, and allows main pressure to move through the valve passage into the clutch feed circuit, applying the clutch.

When control main pressure is cut off from the top of the solenoid regulator valve, the valve spring forces the valve back to the top of its travel allowing the clutch-apply circuit to be exhausted to sump through passages in the exhaust backfill circuit and the clutch is released.

Clutch Application

Two clutches must be applied to attain a forward or reverse range. The clutch application chart lists the clutches that are applied in each of the forward ranges, neutral, and reverse, the corresponding energized solenoids, the C1 and C2 latch valve positions, and the converter flow valve position.

Hydraulic Operation During Electrical Interruption

The solenoid regulator valves are controlled by solenoids that control transmission clutch applications.

The TCU electrically controls the solenoids, which control the solenoid regulator valves. Interruption of electrical power results in the solenoid regulator valves locking in their normally open or closed state.

To minimize the impact of an electrical interruption WT series incorporate a system that enables the transmission to default to totally hydraulic operation.

The C1 and C2 latch valves have been designed into the clutch circuits to provide this default feature.

Range	Clutches Applied	Solenoids Enerergized	C1 Latch Valve	C2 Latch Valve	Convertor Flow Valve
Neutral N1	C5	A,B,E	UP	UP	DOWN
Reverse	C3,C5	A,B,C,E	UP	UP	DOWN
First	C1,C5 L/U	B,E,G*	DOWN	DOWN	DOWN
Second	C1,C4 L/U	B,D,F,G*	DOWN	DOWN	UP
Third	C1,C3 L/U	B,C,F,G	DOWN	DOWN	UP
Fourth	C1,C2 L/U	F,G	DOWN	DOWN	UP
Fifth	C2,C3 L/U	A,C,G,F	DOWN	DOWN	UP
Sixth	C2,C4 L/U	A,D,F	UP	DOWN	UP

A and B solenoids are normally open (when not energized).

C,D,E,F and G solenoids are normally closed (when not energized).

*G solenoid is ON in 1st and 2nd range but is switched OFF for the duration of the 1st to 2nd upshift and the 2nd to 1st downshift.

Latch Valves

When a clutch is applied, clutch feed pressure is routed through the latch valve to the clutch piston.

Clutch-apply pressure against the lands of the latch valve hold the latch valve in place or, in normally closed valve, allows the fluid to simply flow through the valves.

During an electrical interruption, the latch valve cause the transmission to engage specific clutches based on the range in which transmission was operating when the interruption occurred.

The latch valves are activated by normally closed solenoid G. When solenoid G is energized, control main pressure flows to the top of the C1 and C2 latch valves.

This pressure forces the valves downward to connect the necessary flow passages for clutch engagement.

During an electrical interruption, the latch valves and the two normally open solenoids (A and B) enable the transmission to operate in a "**limp home**" mode allowing the operator to drive the vehicle to a location where it can be serviced.

The default system enables the transmission to revert to total hydraulic operation and provides safe operation during a electrical power interruption by shifting to a specific pre-determined range.

The following lists the operating range and the pre-determined default range the transmission will shift to in the event of an electrical interruption:

Operating Range	Limp Home Range
Reverse	NNC
Neutral	NNC
First	Third

CONTROL MAIN CIRCUIT

The control main circuit supplies the steady pressure necessary to actuate the solenoid regulator valves.

The control main circuit receives its pressure from the main pressure circuit and, when needed, helps lower main pressure.

The control main regulator valve removes pressure to provide smooth, consistent control main pressure which aids accurate solenoid regulator valve movement.

Control main pressure is directed to each solenoid regulator valve and the overdrive knockdown valve.

When control main pressure is directed to the top of the solenoid regulator valve, control main pressure pushes against the valve, overcomes spring force and moves the valve downward.

Downward movement of a solenoid regulator valve opens passages that allow main pressure to flow past the valve to the clutch circuits.

TORQUE CONVERTER CIRCUIT

When the torque converter is operating as a hydraulic coupling, a high, constant flow of fluid is required to cool and fill the converter.

During lockup operation, cooling is no longer required and high flow is unnecessary.

The converter flow valve, located in the control module, opens to release the fluid pressure in the converter, allowing the fluid to flow from the converter into the cooler/lubrication circuit.

To attain lockup, pressurized fluid must flow to the lockup piston. The lockup solenoid regulator valve in the control module directs fluid pressure to the lockup clutch piston.

Second - Fifth	Fourth
Sixth	Fifth

NOTE: 1. NNC : Neutral no Clutches.
2. The lockup clutch will always disengage during an electrical interruption or during critical transmission malfunction.

Movement of the solenoid regulator valve allows regulated main pressure to be delivered to the lockup piston and engage the clutch.

If a critical transmission malfunction or electrical interruption occurs, the ECU disengages the lockup clutch.

CONVERTER-IN PRESSURE CIRCUIT

The converter regulator valve is located in the torque converter circuit and ensures the converter receives correct pressure from the main pressure regulator.

Low (Below Normal) Converter-in Pressure

The converter regulator valve remains seated due to converter-in pressure being less than the valve spring force.

The converter-in fluid flows through the converter flow valve, through the converter, back through the converter flow valve, through the orifice in the valve body separator plate, and through the converter regulator valve to the cooler.

The orifice in the valve body separator plate allows increased converter pressure at low charging pump (engine) speed.

Normal Converter-in Pressure

Converter-in pressure is sufficient to move the converter regulator valve slightly against its spring force.

This slight movement allows converter-out fluid to flow through the converter regulator regulator valve from both the separator plate orifice and the converter flow valve.

Fluid flow to the cooler is increased, reducing converter-out pressure.

Excessive Converter-in Pressure

Converter-in pressure in excess of approximately 900kPa (130 psi) moves the converter regulator valve far enough against its spring to route excessive pressure to the suction side of the charging pump.

Converter-out fluid continues to flow through the

Extremely High Converter-in Pressure

Transmission fluid not only transmits torque and pressure but also lubricates and cools the transmission, protecting it from wear, rust, and failure due to overheating.

Heat and wear-control is essential to ensuring the transmission will perform satisfactorily throughout its service life.

The cooler/lubrication circuit is fed by the converter flow valve as fluid is calculated to and from the torque converter.

A lubrication regulator valve in the cooler/ lubrication circuit ensures sufficient lubrication pressure.

The lubrication pressure, fed through the converter flow valve, overcomes lubrication regulator valve spring force.

Fluid is calculated through the cooler/lubrication circuit to the cooler unit, it is then moved through the cooler/lubrication circuit to lubricate and cool bearings, planetary gears, clutches, shafts, support equipment and all other moving components of the transmission.

Exhaust Circuit

The exhaust circuit is the relief circuit for the transmission hydraulic system.

Pressure in this circuit is minimal and the fluid flowing through the exhaust circuit is returned to the sump.

Fluid flows into the exhaust circuit from the main pressure circuit and the exhaust backfill circuit when the pressures exceed the levels maintained by the regulator valves.

Exhaust Backfill Circuit

When a clutch is disengaged, pressure in the

converter flow valve, through both fluid passages, and to the cooler.

exhaust backfill circuit.

Low exhaust backfill pressure exists in the clutch feed passage. When a clutch is released pressure in the exhaust backfill circuit is controlled by the exhaust backfill valve.

The low pressure keeps the clutch feed passages free of air. The absence of air in the system is vital for controlling clutches since air compresses, causing a shift to be either too hard or too soft.

HYDRAULICS (OPERATION)

The HD's hydraulic system is closed loop.

- Hydraulic fluid begins its journey in the sump, travels though the system to perform various tasks, then returns to the sump to cycle again and again.
- Hydraulic fluid is the basis for valve and clutch operation .Fluid also provides cooling and lubrication for the transmission's internal components.
- The flow of hydraulic fluid through the system is initiated by the charging pump.
- The charging pump is driven by the torque converter pump and always rotates at engine speed.

Main Pressure Regulator

The charging pump draws fluid from the sump and forces it into the main pressure regulator.

- This valve adjusts and controls the system's main pressure.
- Charging pump pressure is directed through the main pressure regulator to the top of the valve.
- This forces the valve down against spring pressure and allows a certain amount of pressure to exhaust.
- The spring pressure and fluid pressure equalize themselves at a preset pressure rating.
- During certain ranges, additional pressurized fluid is directed to the main pressure regulator to help lower main pressure.

Control Main Regulator

Main pressure leaving the main pressure regulator is directed to the control main pressure regulator.

The control main pressure regulator is another regulating valve.

- Main pressure enters, then is directed to the top of the valve.
- This forces the valve down against spring pressure, reducing main pressure to about 690 kPa (6.9 bar) (100 psi).
- This new pressure is called "control main pressure".
- Control main pressure is directed to a series of solenoids.
- Solenoids are energized and de-energized by signals from the Electronic Control System's Electronic Control Unit (TCU).
- Pressure from the control main regulator is directed to each solenoid.
- Solenoid design allows control main pressure to "**cascade**" to the next solenoid in line.
- Main pressure from the main pressure regulatorisdirectedtoeachsolenoidregulator valve.
- Solenoid regulator valve design allows main pressure to "**cascade**" to the next solenoid regulator valve.

SOLENOIDS

Solenoids can be either **"normally open"**, or **"normally closed"**.

- Normally closed solenoids are closed when they are de-energized.They must be electrically energized to allow control main pressure to move the solenoid regulator valve down.
- Normally open solenoids are open when they are de-energized.They must be energized to exhaust control main pressure on top of the solenoid regulator valve, allowing the valve to move up.

NORMALLY OPEN SOLENOIDS

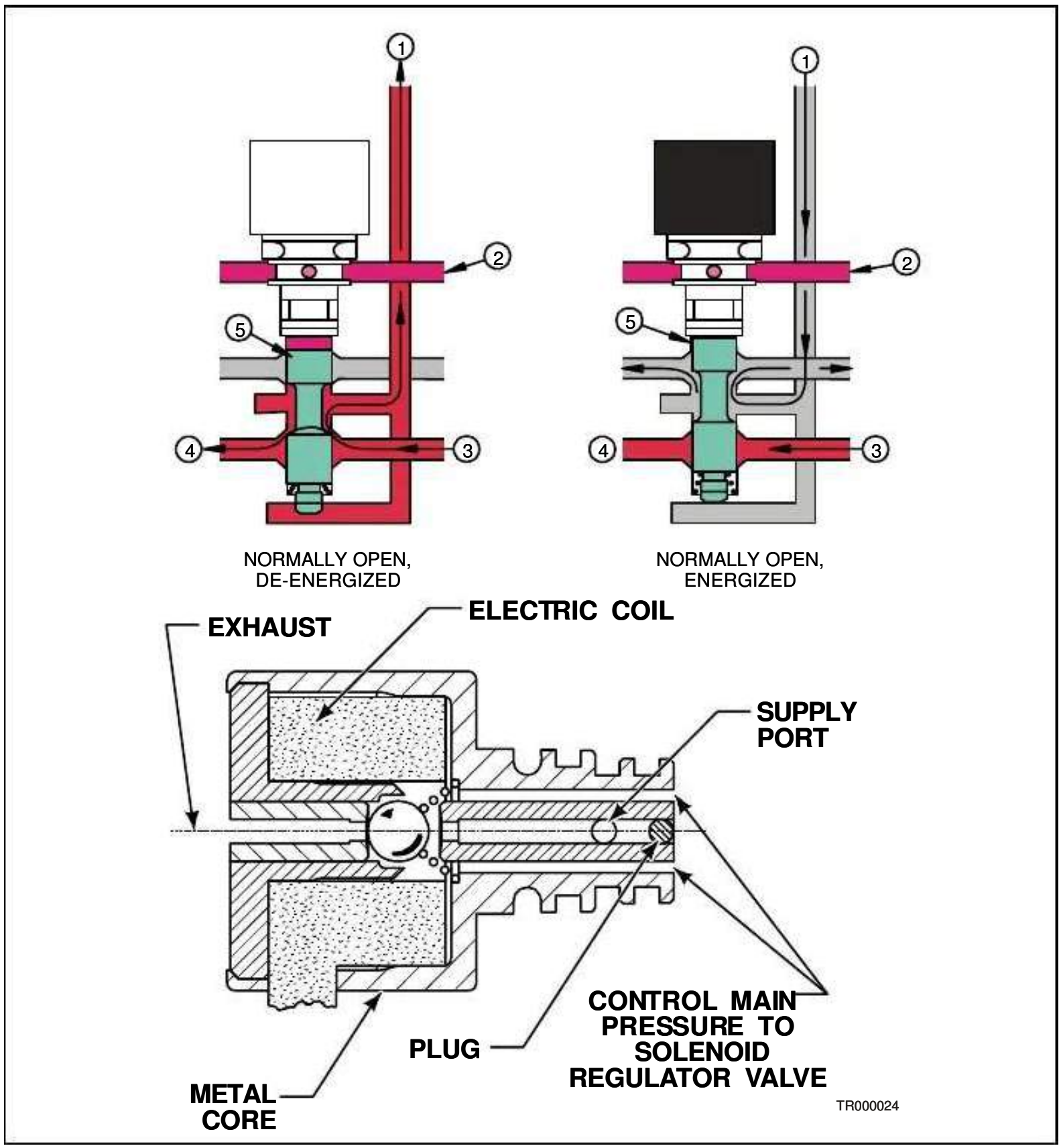

When normally open solenoids are de-energized they're open.

Main pressure oil (3) goes through them to the other solenoids (4) and to the clutch apply circuit (1).

When normally open solenoids are energized, control pressure (2) moves the regulator valve (5) blocking main pressure oil to the clutch apply circuit (1).

Clutch apply (1) is open to the exhaust backfill valve venting the oil to tank (sump).

NORMALLY CLOSED SOLENOIDS

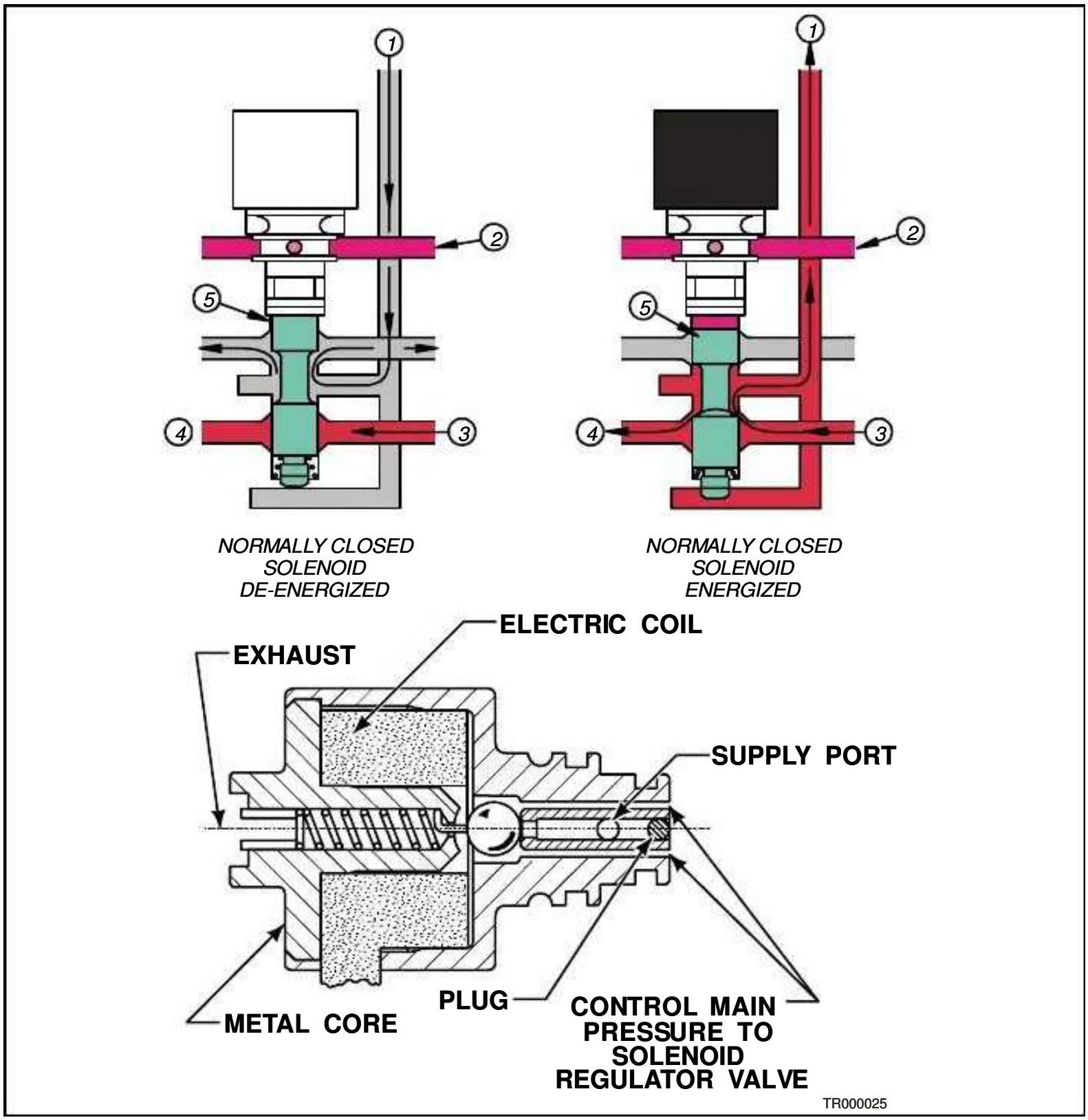

When normally closed solenoids are de-energized they are closed, main pressure oil (3) is blocked

When normally closed solenoids are energized control pressure (2) moves the regulator valve and

from the clutch apply circuit (1).

Control pressure is exhausted from the top of the regulator valve (5) and it moves up.

Oil from the clutch apply circuit (1) is allowed into the backfill circuit and is regulated at a low pressure by the backfill valve.

main pressure oil (3) is sent to the clutch apply circuit (1).

Main pressure oil also Cascades to other solenoids (4).

NOTE:The HD's hydraulic system utilizes six solenoids and regulator valve assemblies.

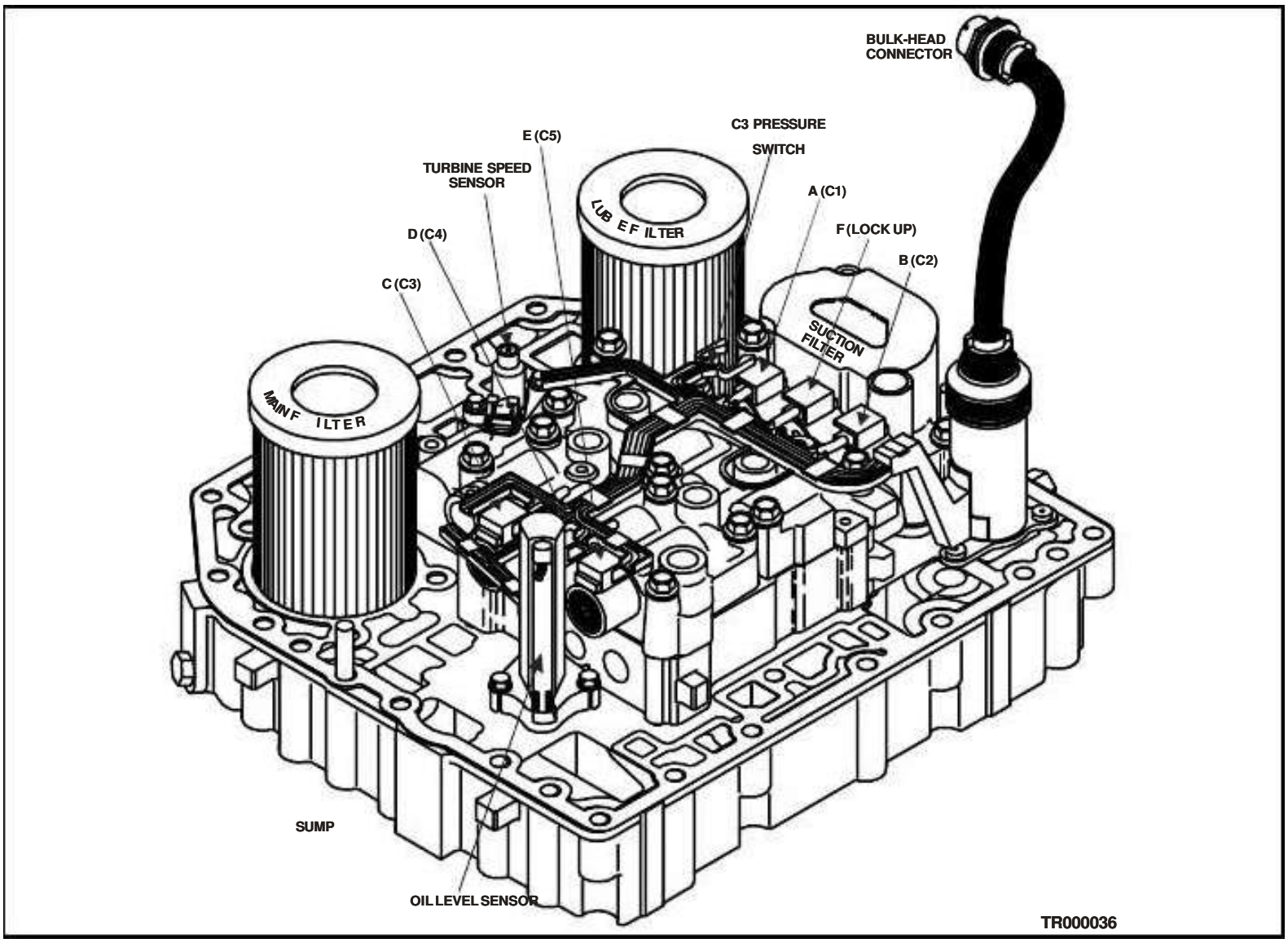

- Each solenoid is labeled by a letter.
- Solenoids A and B are normally open.
- All other solenoids are normally closed.
- Each solenoid and solenoid regulator valve controls a clutch applies circuit.

1. Solenoid A controls the C1 clutch apply circuit.

2. Solenoid B controls the C2 clutch apply circuit.

3. Solenoid C controls the C3 clutch apply circuit.

4. Solenoid D controls the C4 clutch apply circuit.

5. Solenoid E controls the C5 clutch apply circuit.

6. Solenoid F controls the lock-up clutch apply circuit.

7. Solenoid G controls the latching valves. (C1 and C2)

8. Solenoid H controls the retarder function.

HYDRAULIC CIRCUITS

Neutral

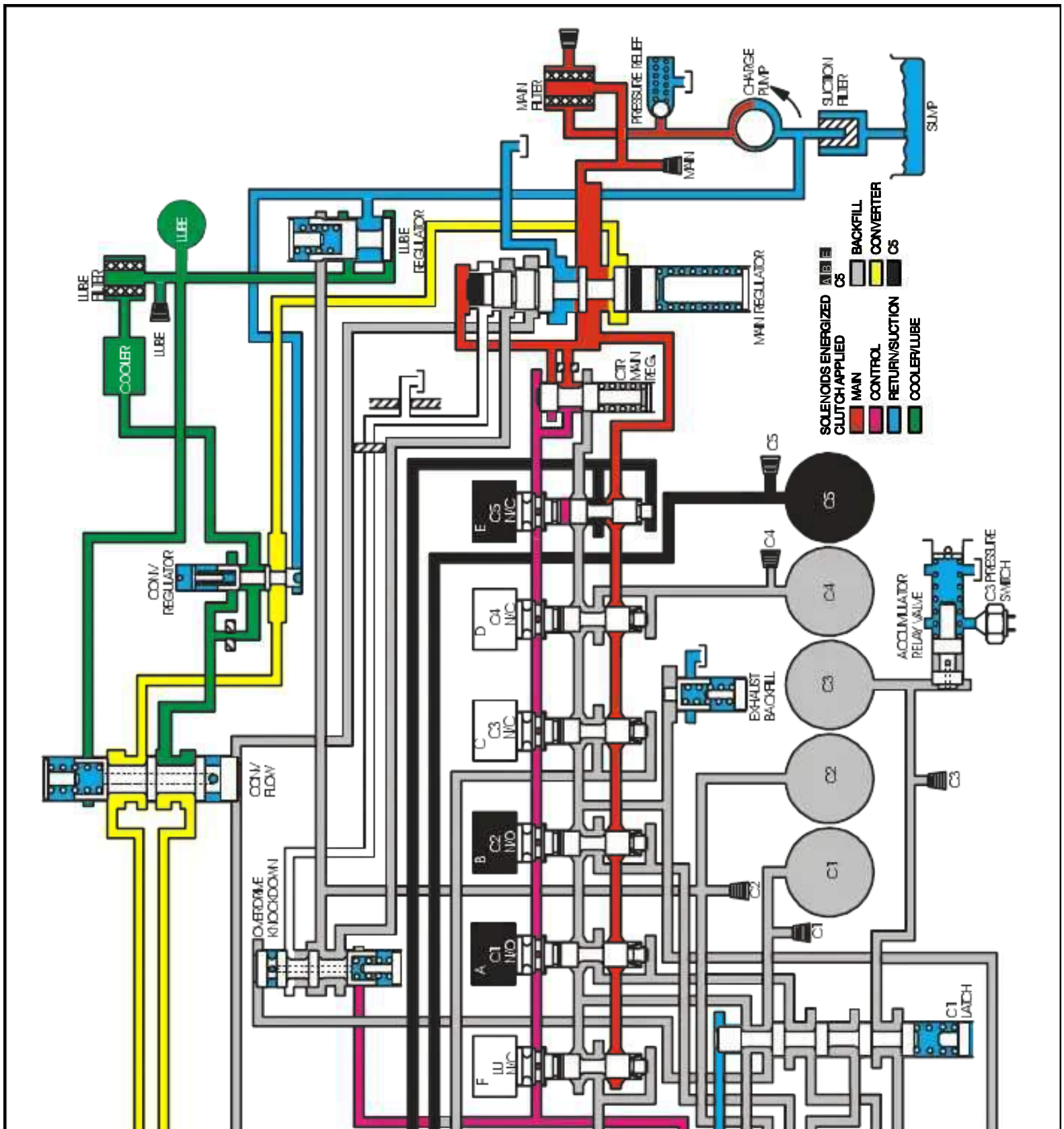

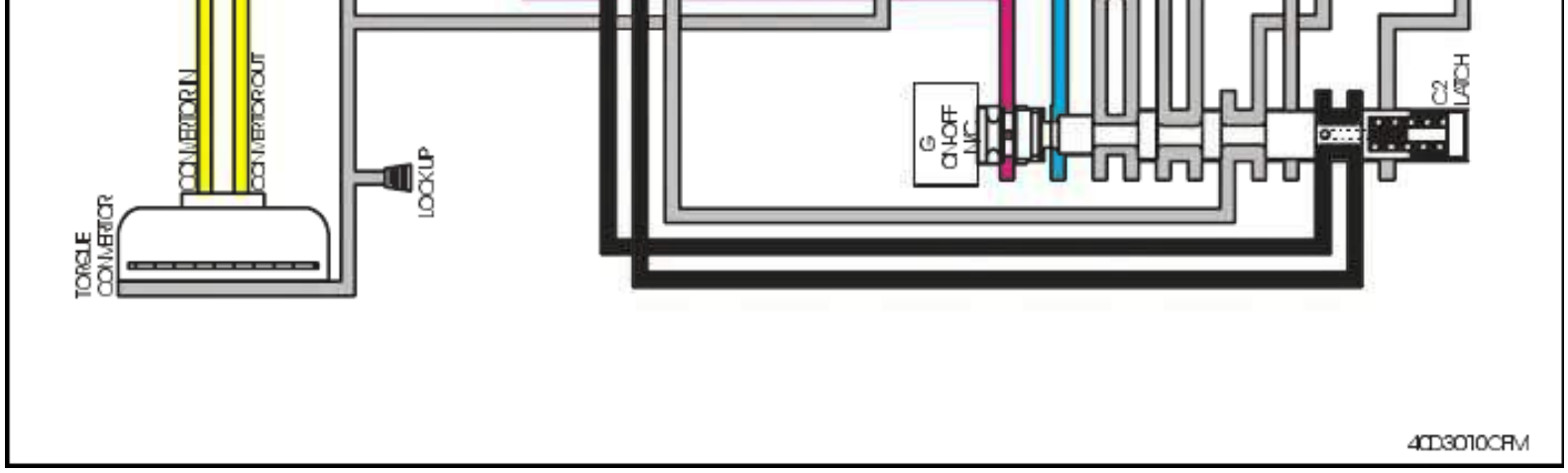
TORQUE CONVERTOR
CONVERTOR IN
CONVERTOR OUT
LOCK UP
G ON-OFF N/C
C2 LATCH
40D3010CFM

First

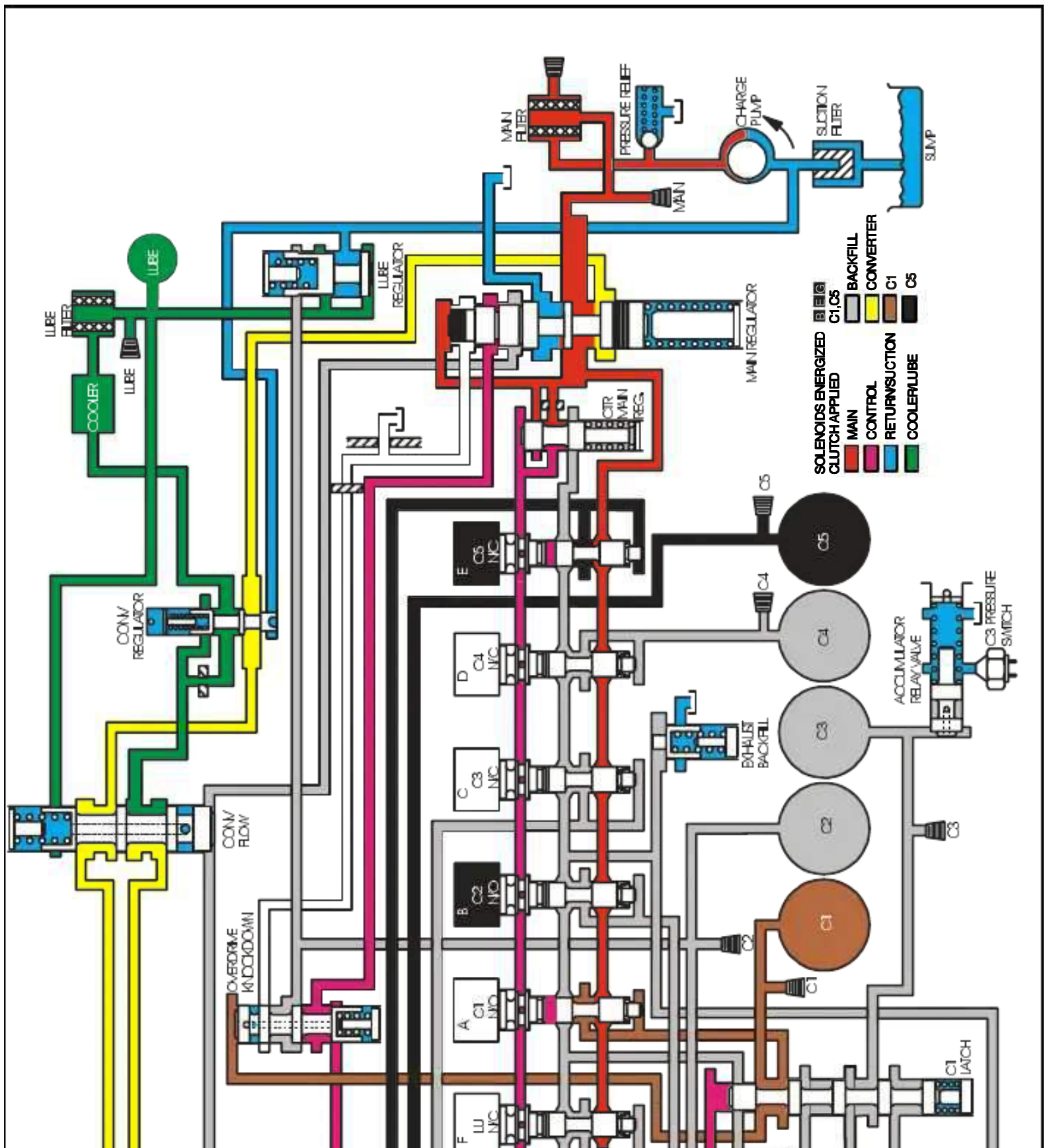
MAIN FILTER
PRESSURE RELIEF
CHARGE PUMP
SUCTION FILTER
SUMP
MAIN
LUBE FILTER
LUBE
LUBE REGULATOR
COOLER
MAIN REGULATOR
CTR MAIN REG.
CONV REGULATOR
CONV FLOW
OVERDRIVE KNOCKDOWN
EXHAUST BACKFILL
ACCUMULATOR RELAY VALVE
C3 PRESSURE SWITCH
C1 LATCH
SOLENOIDS ENERGIZED
CLUTCH APPLIED
MAIN
CONTROL
RETURN/SUCTION
COOLER/LUBE
C1,C5
BACKFILL
CONVERTER
C1
C5

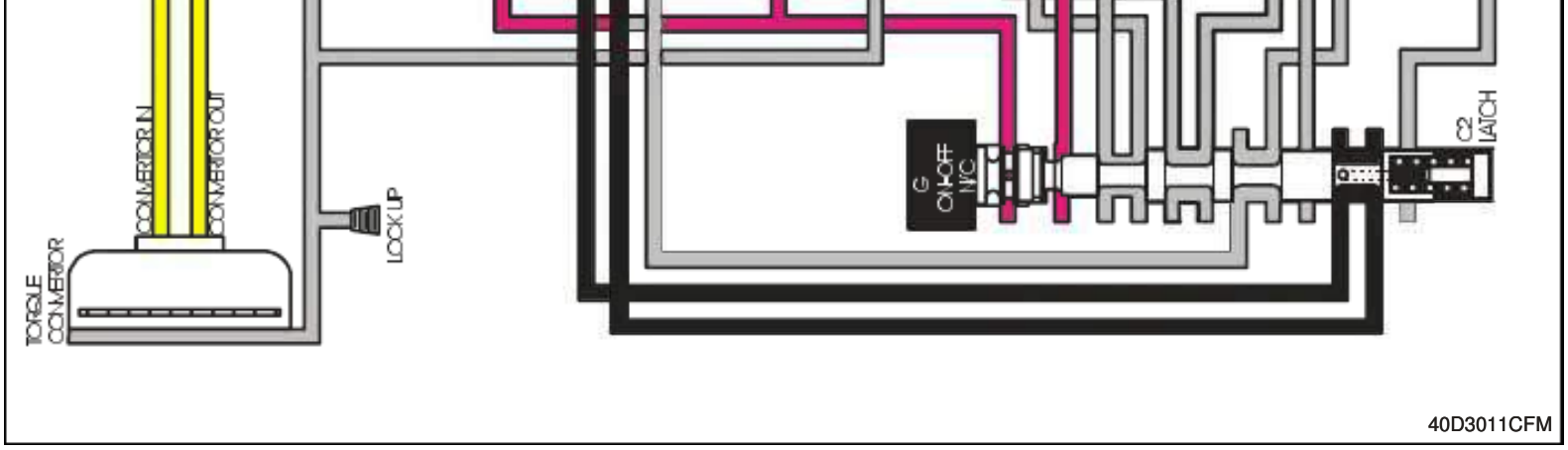
TORQUE CONVERTOR
CONVERTOR IN
CONVERTOR OUT
LOCK UP
G
C2 LATCH
40D3011CFM

Second

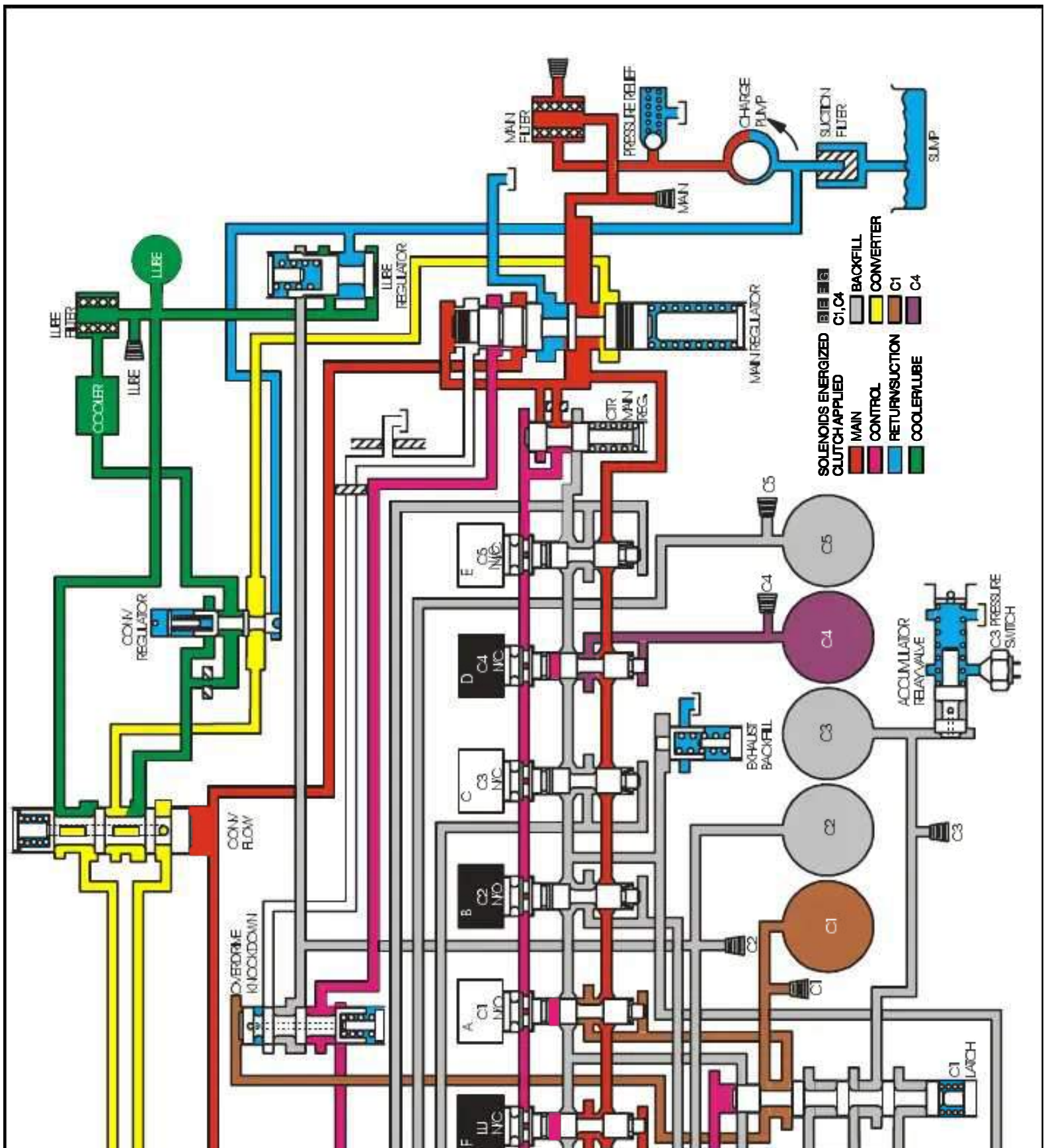
MAIN FILTER
PRESSURE RELIEF
CHARGE PUMP
SUCTION FILTER
SUMP
MAIN
LUBE FILTER
LUBE
COOLER
LUBE REGULATOR
MAIN REGULATOR
CONV. REGULATOR
CONV. FLOW
OVERDRIVE KICKDOWN
CTR MAIN REG.
EXHAUST BACKFILL
ACCUMULATOR RELAY VALVE
C3 PRESSURE SWITCH
C1 LATCH
SOLENOIDS ENERGIZED
CLUTCH APPLIED
MAIN
CONTROL
RETURN/SUCTION
COOLER/LUBE
C1,C4
BACKFILL
CONVERTER
C1
C4

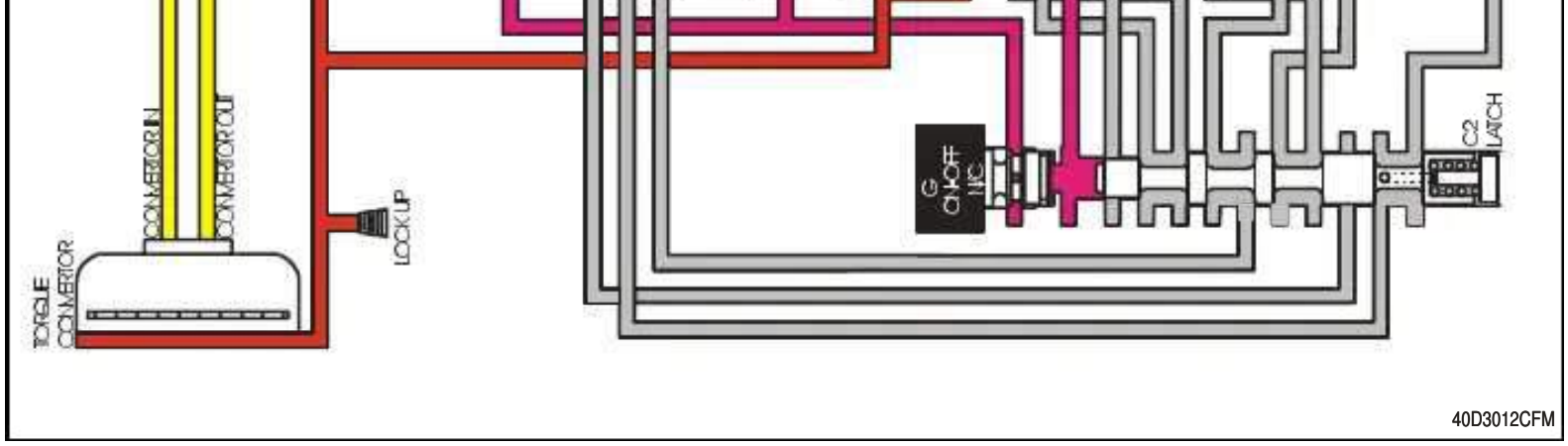
TORQUE CONVERTOR
CONVERTOR IN
CONVERTOR OUT
LOCK UP
C2 LATCH
40D3012CFM

Third

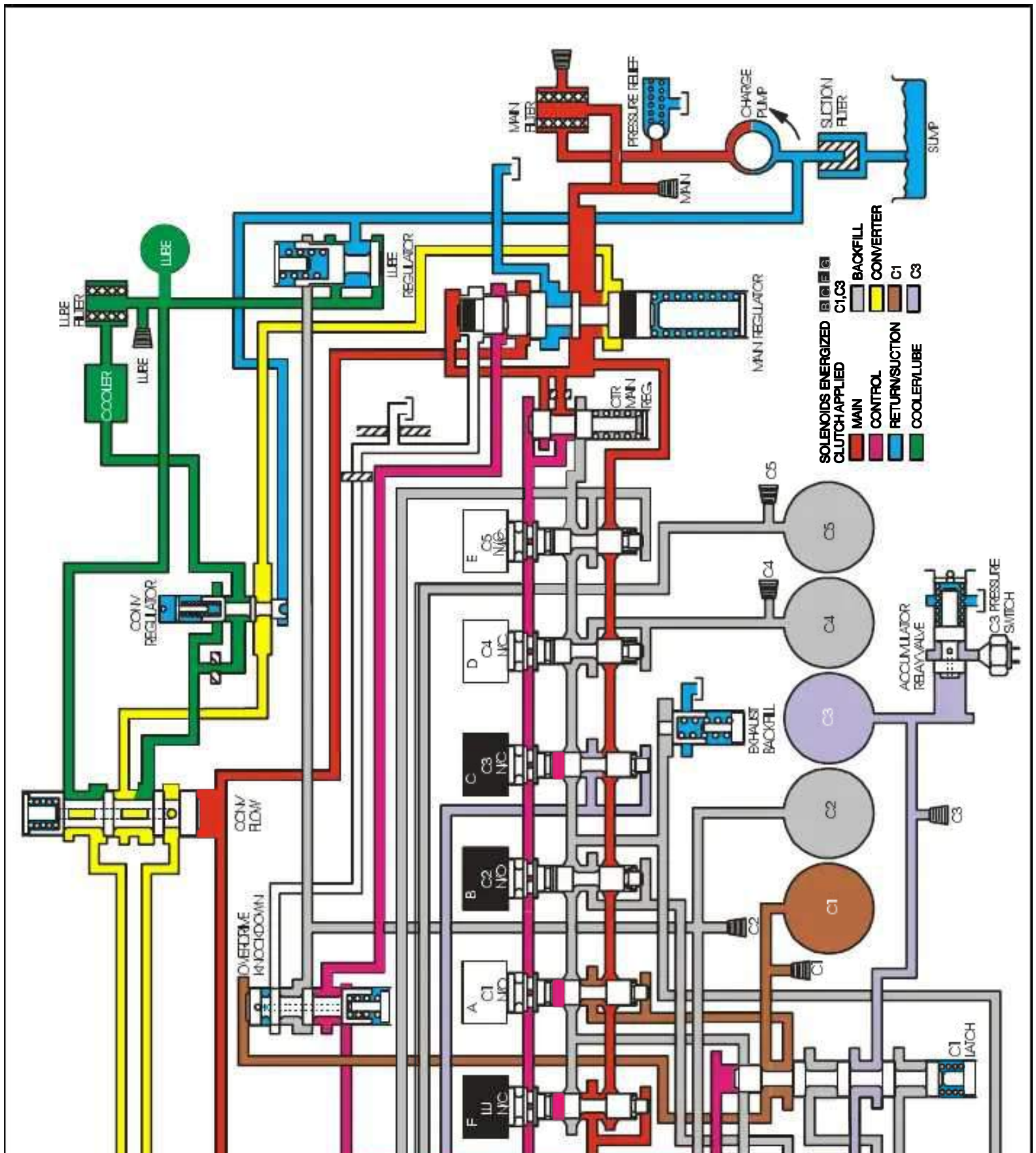
MAIN FILTER
PRESSURE RELIEF
CHARGE PUMP
SUCTION FILTER
SUMP
MAIN
LUBE FILTER
LUBE
LUBE REGULATOR
COOLER
MAIN REGULATOR
CONV REGULATOR
CONV FLOW
CTR MAIN REG
OVERDRIVE LOCKDOWN
A C1 N/O
B C2 N/O
C C3 N/C
D C4 N/C
E C5 N/C
F L N/C
EXHAUST BACKFILL
ACCUMULATOR RELAY VALVE
C3 PRESSURE SWITCH
C1 LATCH
C1
C2
C3
C4
C5
SOLENOIDS ENERGIZED
CLUTCH APPLIED
MAIN
CONTROL
RETURN/SUCTION
COOLER/LUBE
C1,C3
BACKFILL
CONVERTER
C1
C3

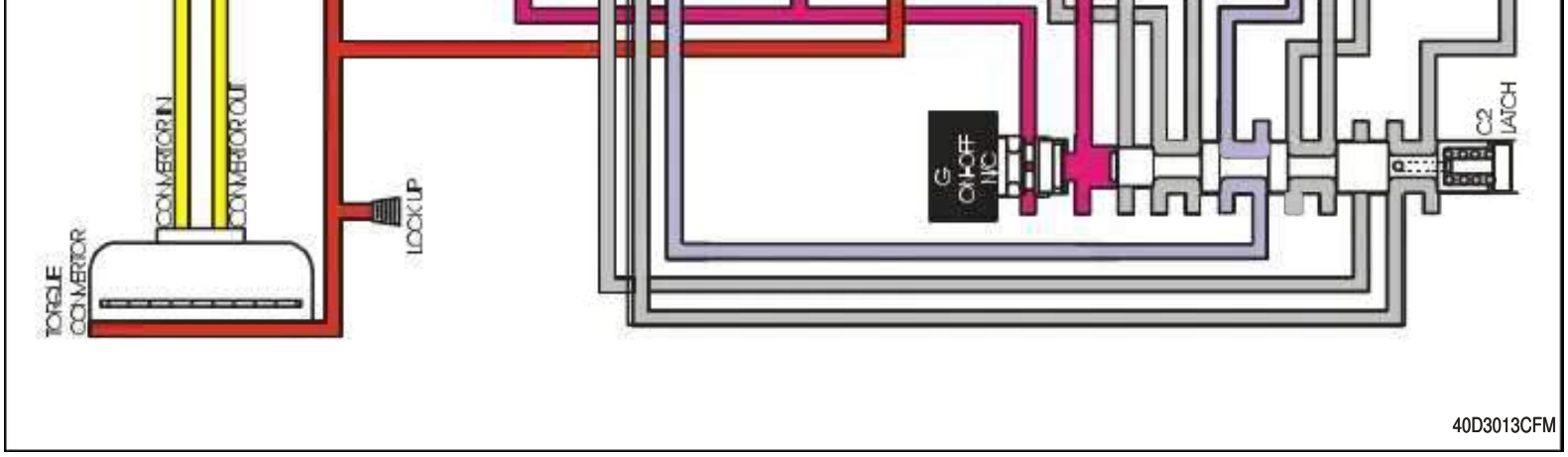
TORQUE CONVERTER
CONVERTOR IN
CONVERTOR OUT
LOCK UP
G
C2 LATCH
40D3013CFM

Fourth

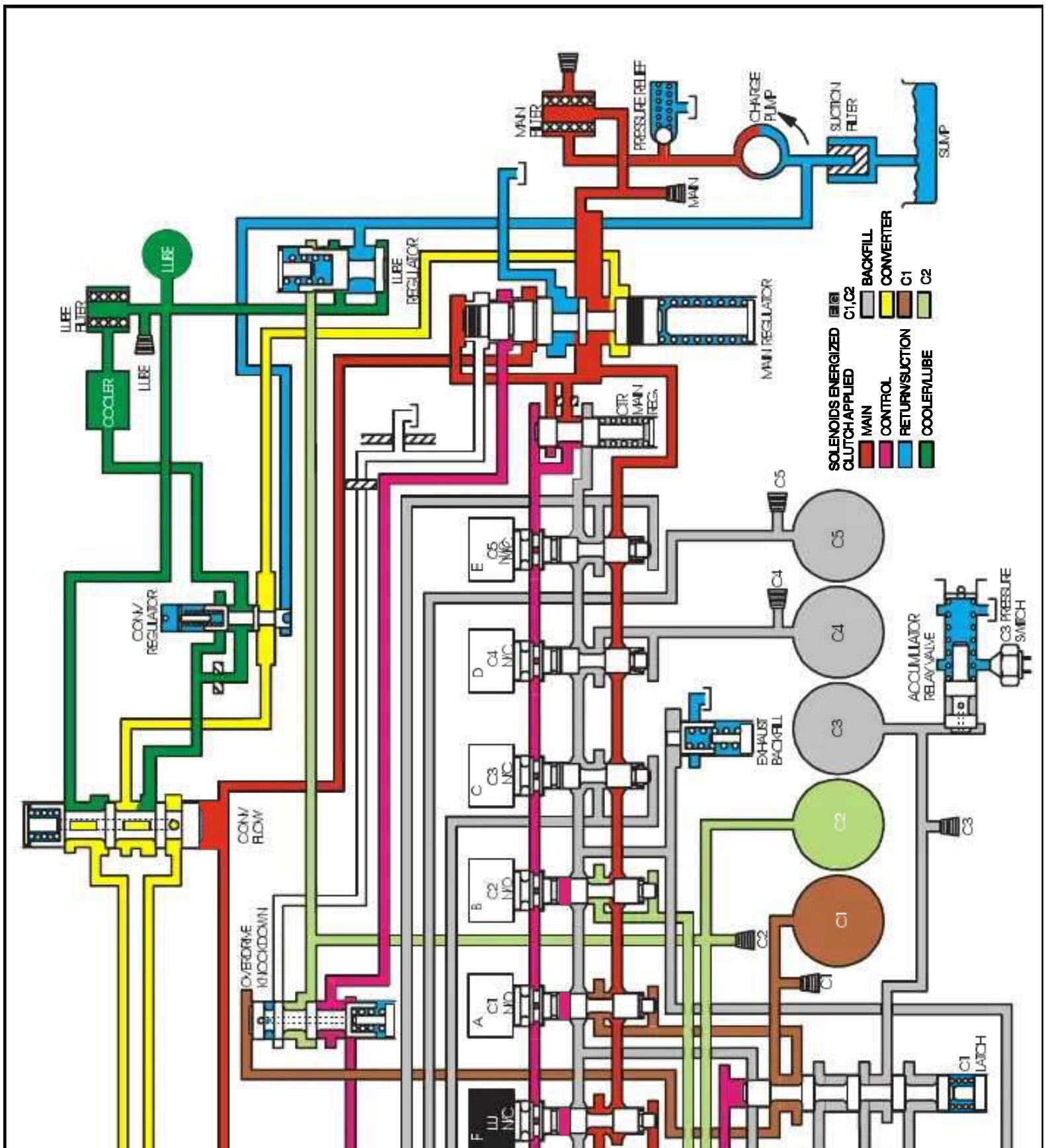
MAIN FILTER
PRESSURE RELIEF
CHARGE PUMP
SUCTION FILTER
SUMP
MAIN
LUBE FILTER
LUBE
LUBE REGULATOR
COOLER
MAIN REGULATOR
CONV REGULATOR
CONV FLOW
OVERDRIVE KNOCKDOWN
CTR MAIN REG
EXHAUST BACKFILL
ACCUMULATOR RELAY VALVE
C3 PRESSURE SWITCH
C1 LATCH
SOLENOIDS ENERGIZED CLUTCH APPLIED
MAIN
CONTROL
RETURN/SUCTION
COOLER/LUBE
C1,C2
BACKFILL
CONVERTER
C1
C2

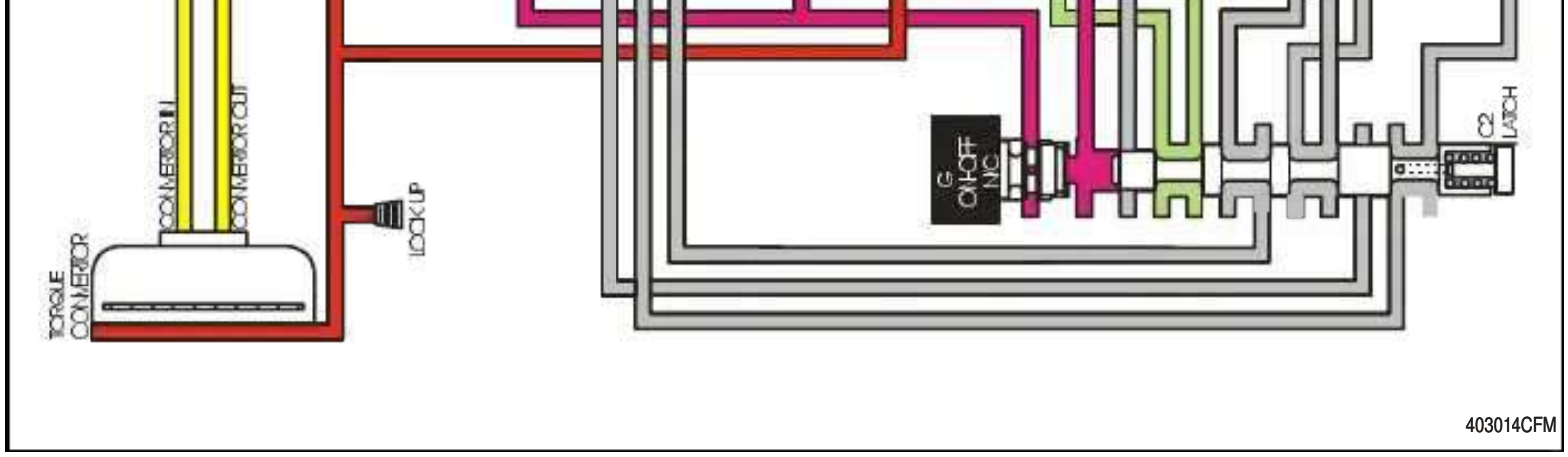
TORQUE CONVERTER
CONVERTOR IN
CONVERTOR OUT
LOCK UP
G
C2 LATCH
403014CFM

Fifth

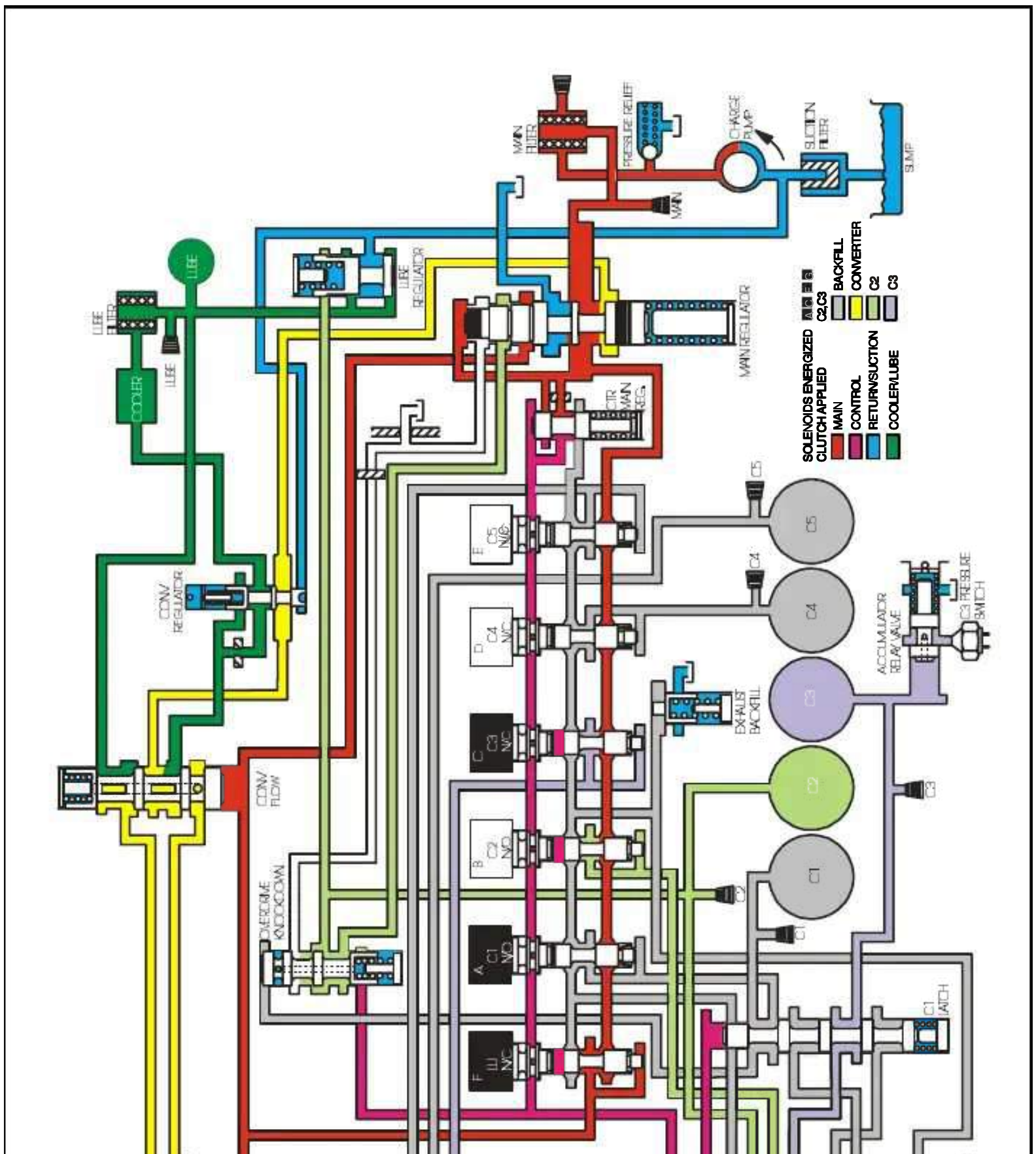
MAIN FILTER
PRESSURE RELIEF
CHARGE PUMP
SUCTION FILTER
SUMP
MAIN
LUBE FILTER
LUBE
COOLER
LUBE REGULATOR
MAIN REGULATOR
CTR MAIN REG
CONV REGULATOR
CONV FLOW
OVERDRIVE KNOCKDOWN
EXHAUST BACKFILL
ACCUMULATOR RELAY VALVE
C3 PRESSURE SWITCH
C1 LATCH
SOLENOIDS ENERGIZED
CLUTCH APPLIED
MAIN
CONTROL
RETURN/SUCTION
COOLER/LUBE
C2,C3
BACKFILL
CONVERTER
C2
C3

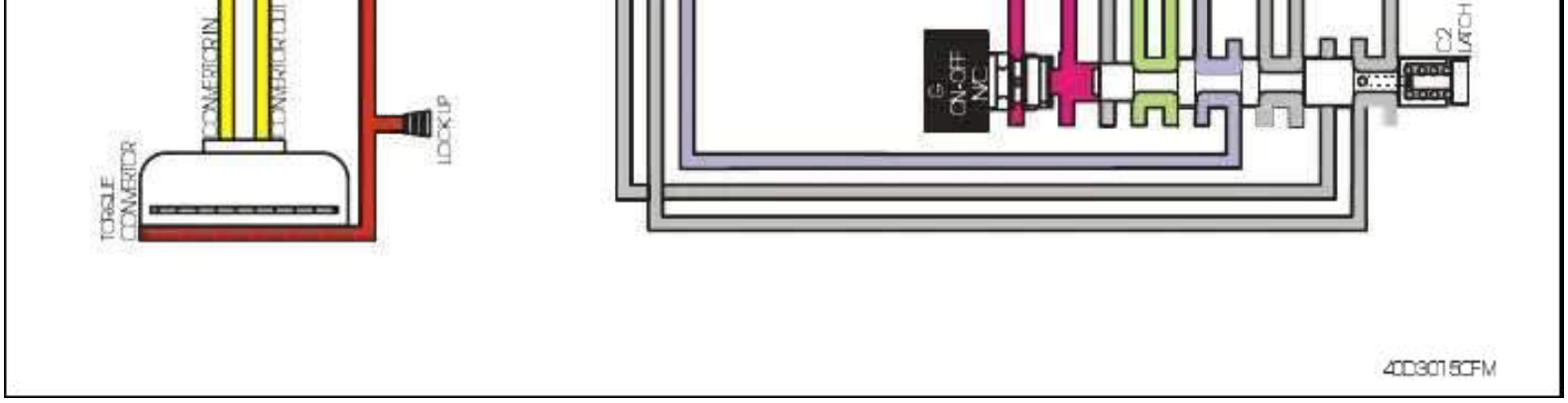
TO REAR CONVERTOR
CONVERTOR IN
CONVERTOR OUT
LOCK UP
G ON-OFF N/C
C2 LATCH
40D9015CFM

Sixth

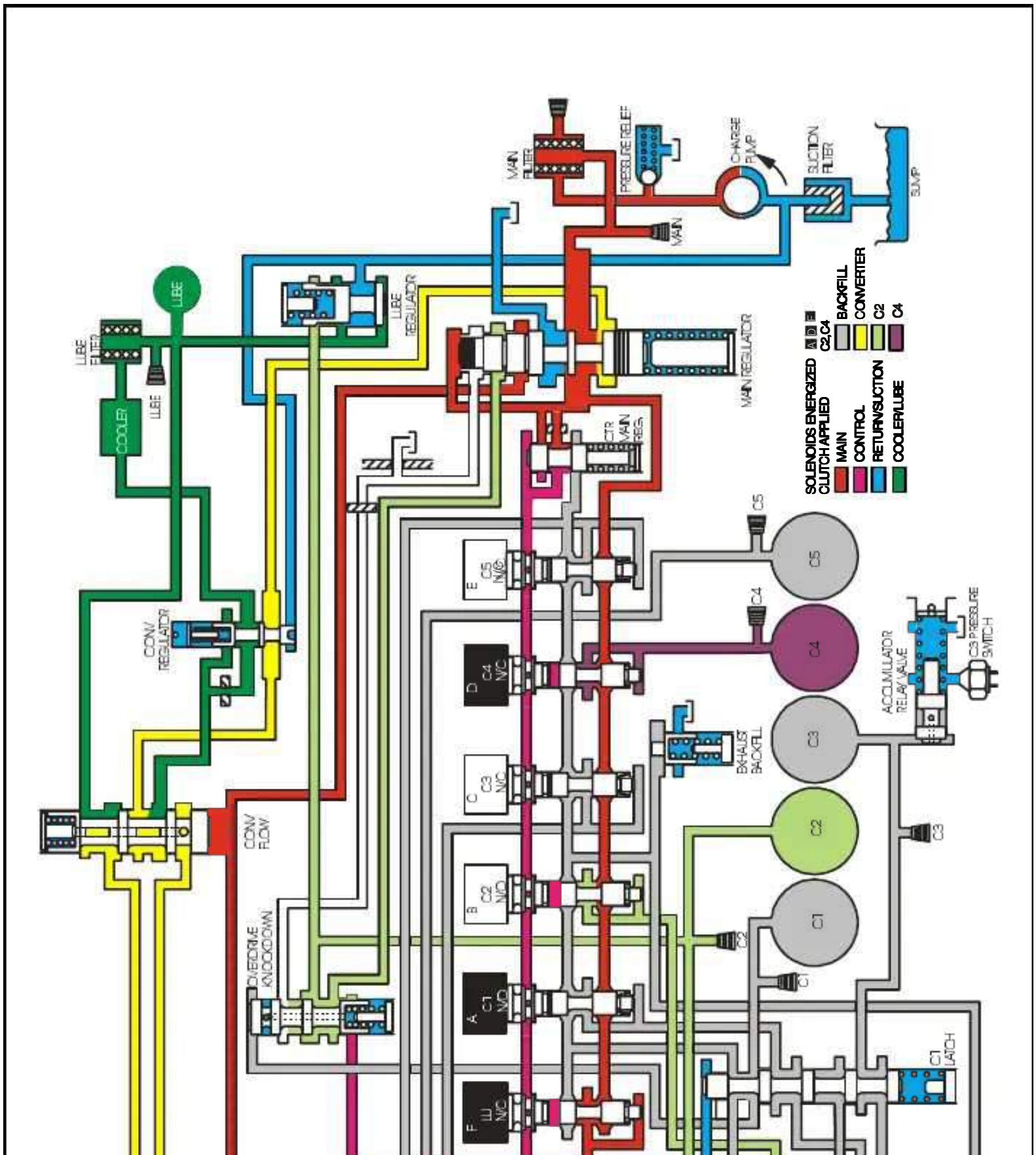
MAIN FILTER
PRESSURE RELIEF
CHARGE PUMP
SUCTION FILTER
SUMP
MAIN
LUBE FILTER
LUBE
COOLER
LUBE
LUBE REGULATOR
MAIN REGULATOR
CTR MAIN REG
CONV REGULATOR
CONV FLOW
OVERDRIVE KNOCKDOWN
E C5 N/C
D C4 N/C
C C3 N/C
B C2 N/C
A C1 N/C
F LU N/C
EXHAUST BACKFILL
ACCUMULATOR RELAY VALVE
C3 PRESSURE SWITCH
C1 LATCH
C5
C4
C3
C2
C1
SOLENOIDS ENERGIZED A B E
CLUTCH APPLIED C2,C4
MAIN BACKFILL
CONTROL CONVERTER
RETURN/SUCTION C2
COOLER/LUBE C4

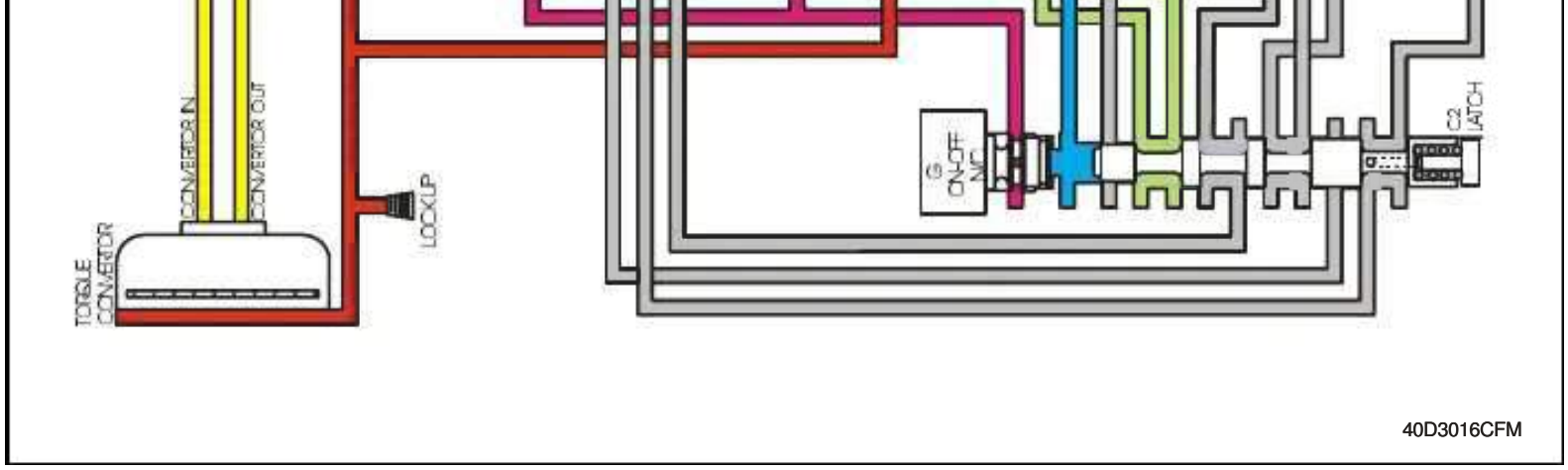
TORQUE CONVERTER
CONVERTOR IN
CONVERTOR OUT
LOCKUP
G ON-OFF N/C
C2 LATCH
40D3016CFM

Reverse

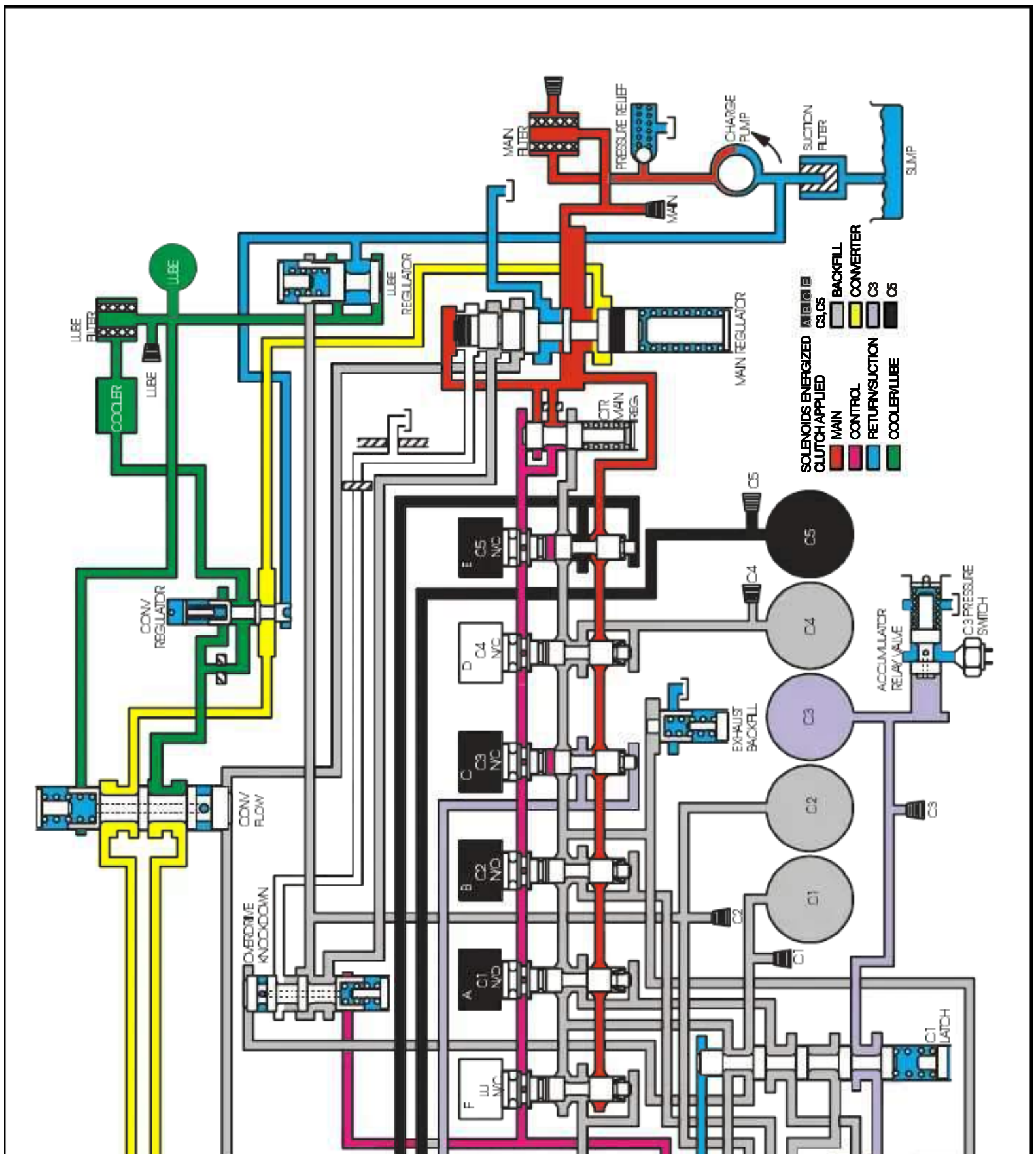
MAIN FILTER
PRESSURE RELIEF
CHARGE PUMP
SUCTION FILTER
SUMP
MAIN
LUBE FILTER
LUBE
LUBE REGULATOR
COOLER
LUBE
MAIN REGULATOR
CTR MAIN REG.
CONV REGULATOR
CONV FLOW
OVERDRIVE KNOCKDOWN
E C5 N/C
D C4 N/C
C C3 N/C
B C2 N/O
A C1 N/O
F L/U N/C
EXHAUST BACKFILL
ACCUMULATOR RELIEF VALVE
C3 PRESSURE SWITCH
C5
C4
C3
C2
C1
C1 LATCH
SOLENOIDS ENERGIZED A B C E
CLUTCH APPLIED C3,C5
MAIN BACKFILL
CONTROL CONVERTER
RETURN/SUCTION C3
COOLER/LUBE C5

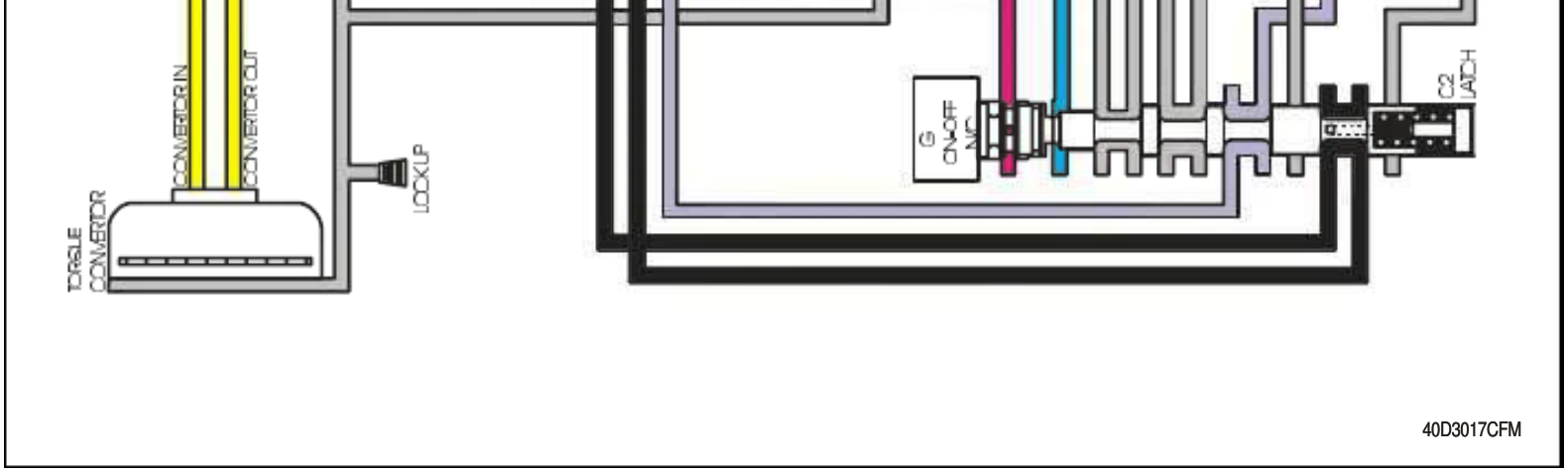

TORQUE CONVERTER AND LUBE PRESSURE CIRCUITS - OVERVIEW

As the main pressure regulator valve moves down, it allows pressure into the torque converter circuit.

- Pressure flows from the main pressure regulator, through the converter flow valve, through the converter and back to the converter.
- Pressure exiting the converter flow valve is directed into the lube circuit.
- Here, pressure flows through the cooler, the lube filter, out to lubricated parts, then "**deadheads**" at the converter flow valve.
- The lube circuit's pressure is controlled by the lube pressure regulator.
- Depending on the range, lube pressure runs at either 151 kPa (1.5 bar) (22 psi) or 117 kPa (1.17 bar) (17 psi).
- The lube pressure regulator also controls converter circuit pressure, but the converter relief valve protects against extremely high pressure and surges 896 kPa (8.96 bar) (130 psi).
- Pressure exhausted from the lube pressure regulator and converter relief valves is directed to the inlet side of the charging pump.
- This minimizes oil churn and aeration that might occur if the valves exhausted to sump.

CONVERTER FLOW VALVE OPERATION

- The converter flow valve's position is controlled by the lock-up clutch apply circuit.
- When solenoid F is energized the main pressure enters the lock-up clutch apply circuit, the converter flow valve is forced up.
- When the converter flow valve is up (during lock-up), pressure from the main pressure regulator flows through the converter flow valve directly into the lube pressure circuit.
- Fluid flows through the cooler, lube filter, lube pressure regulator and out to lubricated components.
- But since the converter flow valve is up, lube
- The converter is receiving less fluid / pressure than it was when the flow valve was down. But since the converter is in lock-up, less fluid is required.
- When solenoid F is energized, main pressure in the clutch apply circuit is also directed to the main pressure regulator.This helps lower main pressure.

OVERDRIVE KNOCKDOWN VALVE

The overdrive knockdown valve receives constant control main pressure.

- This valve is also two clutch apply circuits directed to it - C1 and C2.
- Depending on the transmission range, the overdrive knockdown valve sends either control main or main pressure to the main pressure regulator.
- These pressures help the main pressure regulator reduce main pressure.

Overdrive Knockdown Valve Operation - C1 Applied

When the C1 clutch is applied (1st, 2nd, 3rd and 4th), the overdrive knockdown valve is positioned down.

- This sends control main pressure to the main pressure regulator.
- This "boost" of control main pressure helps the main pressure regulator lower main pressure.

Overdrive Knockdown Valve Operation - C2 Applied

In 5th and 6th, the C2 clutch is applied and the overdrive knockdown valve is positioned up (C1 clutch is exhausted).

- This sends main pressure to the main pressure regulator.
- This "**boost**" of main pressure helps the main pressure regulator lower main pressure even more.
- This also sends main pressure to the lube