ERC 212/214/216/Z12/Z14/Z16

02.04 -

Operating instructions

GB

50434880

03.11

ERC 212
ERC 214
ERC 216
ERC Z12
ERC Z14
ERC Z16

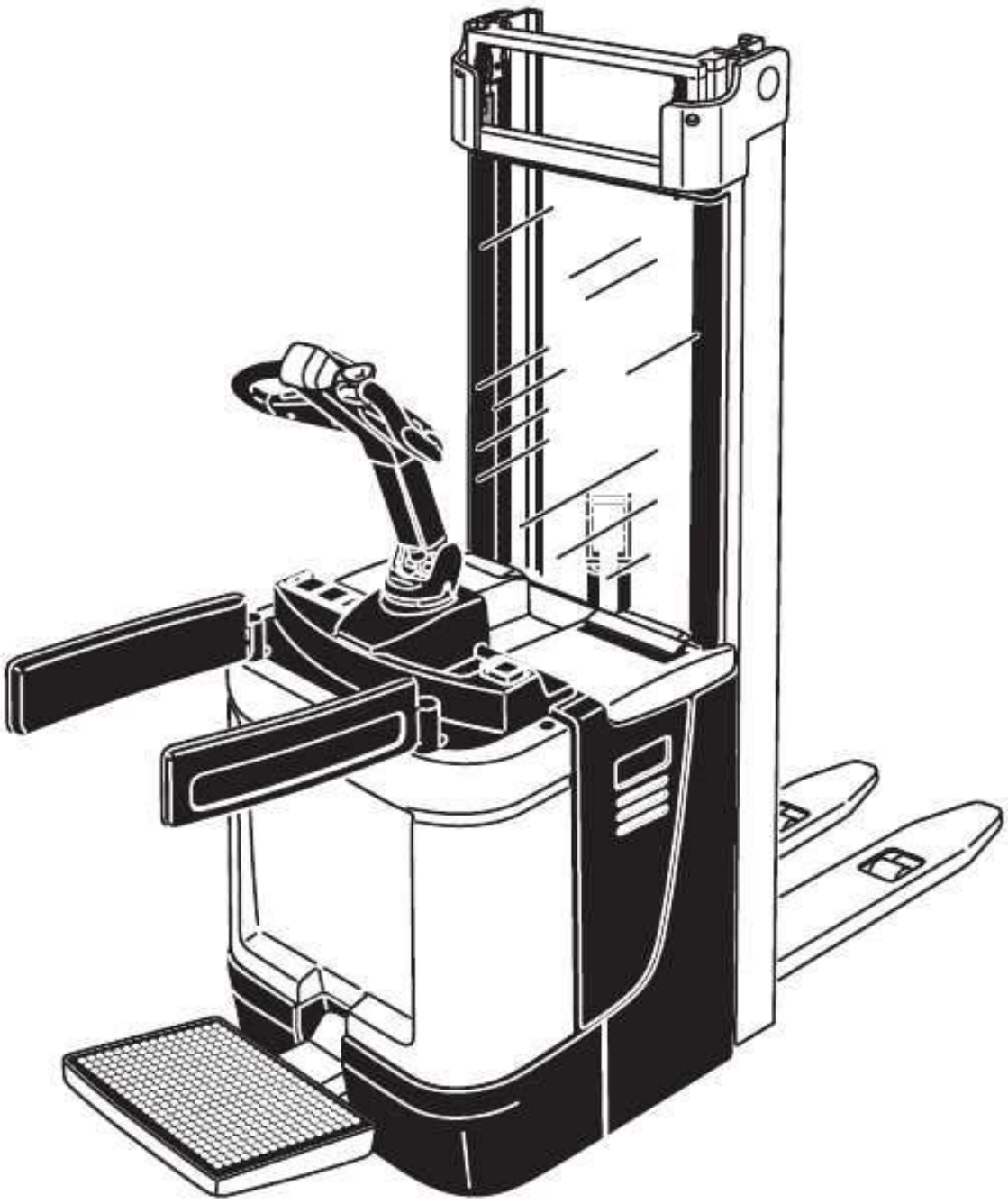

JUNGHEINRICH

Machines. Ideas. Solutions.

https://www.besttruckmanuals.com/

Declaration of Conformity

Jungheinrich AG, Am Stadtrand 35, D-22047 Hamburg
Manufacturer or his authorized representative in the Community

Type	Option	Serial No.	Year of construction
ERC 212 ERC Z12 ERC 214 ERC Z14 ERC 216 ERC Z16			

Additional information

Authorised signatory

Date

GB **EU Declaration of Conformity**
The signatories hereby certify that the specified powered industrial truck conforms to the EU Directive 2006/42/EC (Machine Directive) and 2004/108/EEC (Electro-Magnetic Compatibility, EMC) including their amendments as translated into national legislation of the member countries. The signatories are individually empowered in each case to compile the technical documentation.

https://www.besttruckmanuals.com/

https://www.besttruckmanuals.com/

Foreword

Notes on the operating instructions

The present ORIGINAL OPERATING INSTRUCTIONS are designed to provide sufficient instruction for the safe operation of the industrial truck. The information is provided clearly and concisely. The chapters are arranged by letter and the pages are numbered continuously.

The operator manual details different industrial truck models. When operating and servicing the industrial truck, make sure that the particular section applies to your truck model.

Our trucks are subject to ongoing development. Jungheinrich reserves the right to alter the design, equipment and technical features of the system. No guarantee of particular features of the truck should therefore be assumed from the present operating instructions.

Safety notices and text mark-ups

Safety instructions and important explanations are indicated by the following graphics:

⚠ **DANGER!**

Indicates an extremely hazardous situation. Failure to comply with this instruction will result in severe irreparable injury and even death.

⚠ **WARNING!**

Indicates an extremely hazardous situation. Failure to comply with this instruction may result in severe irreparable injury and even death.

⚠ **CAUTION!**

Indicates a hazardous situation. Failure to comply with this instruction may result in slight to medium injury.

NOTE

Indicates a material hazard. Failure to comply with this instruction may result in material damage.

➔ Used before notices and explanations.

● Indicates standard equipment
○ Indicates optional equipment

Copyright

Copyright of these operating instructions remains with JUNGHEINRICH AG.

https://www.besttruckmanuals.com/

Jungheinrich Aktiengesellschaft

Am Stadtrand 35
22047 Hamburg - Germany

Tel: +49 (0) 40/6948-0

www.jungheinrich.com

03.11 EN

https://www.besttruckmanuals.com/

Table of Contents

https://www.besttruckmanuals.com/

https://www.besttruckmanuals.com/

https://www.besttruckmanuals.com/

https://www.besttruckmanuals.com/

Appendix

JH Traction Battery Operating Instructions

➔ These operating instructions apply only to Jungheinrich battery models. If using another brand, refer to the manufacturer's operating instructions.

https://www.besttruckmanuals.com/

https://www.besttruckmanuals.com/

A Correct Use and Application

1 General

The industrial truck described in the present operating instructions is designed for lifting, lowering and transporting load units.
It must be used, operated and serviced in accordance with the present instructions.
Any other type of use is beyond the scope of application and can result in damage to personnel, the industrial truck or property.

2 Correct application

NOTE

The maximum load and load distance are indicated on the load chart and must not be exceeded.
The load must rest on the load handler or be lifted by an attachment approved by the manufacturer.
The load must rest on the back of the fork carriage and centrally between the forks.

- Lifting and lowering of loads.
- Transporting lowered loads.
- Do not travel with a raised load (>500 mm).
- Do not carry or lift passengers.
- Do push or pull load units.

3 Approved application conditions

- Operation in industrial and commercial environments.
- Permissible temperature range +5°C to +40°C.
- Operation only on secure, level surfaces with sufficient capacity.
- Operation only on routes that are visible and approved by the proprietor.
- Negotiating inclines up to a maximum of 15 %.
- Do not negotiate inclines crosswise or at an angle. Transporting loads downhill.
- Operation in partially public traffic.

➔ Special equipment and authorisation are required if the truck is to be used in extreme conditions.
The truck is not authorised for use in areas at risk of explosion.

https://www.besttruckmanuals.com/

4 Proprietor responsibilities

For the purposes of the present operating instructions the “proprietor” is defined as any natural or legal person who either uses the industrial truck himself, or on whose behalf it is used. In special cases (e.g. leasing or renting) the proprietor is considered the person who, in accordance with existing contractual agreements between the owner and user of the industrial truck, is charged with operational duties.
The proprietor must ensure that the industrial truck is used only for the purpose for which it is intended and that there is no danger to life and limb of the user and third parties. Furthermore, accident prevention regulations, safety regulations and operating, servicing and repair guidelines must be followed. The proprietor must ensure that all users have read and understood these operating instructions.

NOTE

Failure to comply with the operating instructions shall invalidate the warranty. The same applies if improper work is carried out on the truck by the customer or third parties without the permission of the manufacturer.

5 Adding attachments and/or accessories

Adding accessories

The mounting or installation of additional equipment which affects or enhances the performance of the forklift truck requires the written permission of the manufacturer. Local authority approval may also need to be obtained.
Local authority approval does not however constitute the manufacturer’s approval.

https://www.besttruckmanuals.com/

B Truck Description

1 Application

The industrial truck is an electric pallet truck with a folding platform.
It is designed for lifting and transporting goods on level floors. Wheel arm lift (ERC Z12/Z14/Z16 only) increases the ground clearance when transporting goods on uneven surfaces. Loads can be stacked or unstacked up to 5.35m high and transported over long distances. The rated capacity of the truck is shown on the data plate or the data capacity plate Qmax.
Due to its high travel speed the ERC 214/216 has side restraints.

1.1 Truck models and rated capacity

The rated capacity depends on the model. The rated capacity can be derived from the model name.

Type	Capacity	Motor output
ERC 212 / Z12	1200 kg	2,0 kW
ERC 214 / Z14	1400 kg	2,0 kW
ERC 216 / Z16	1600 kg	2,0 kW

The rated capacity does not generally match the permissible capacity. The capacity can be found on the load chart attached to the rack.

https://www.besttruckmanuals.com/

2 Assemblies and Functional Description

2.1 Assembly Overview

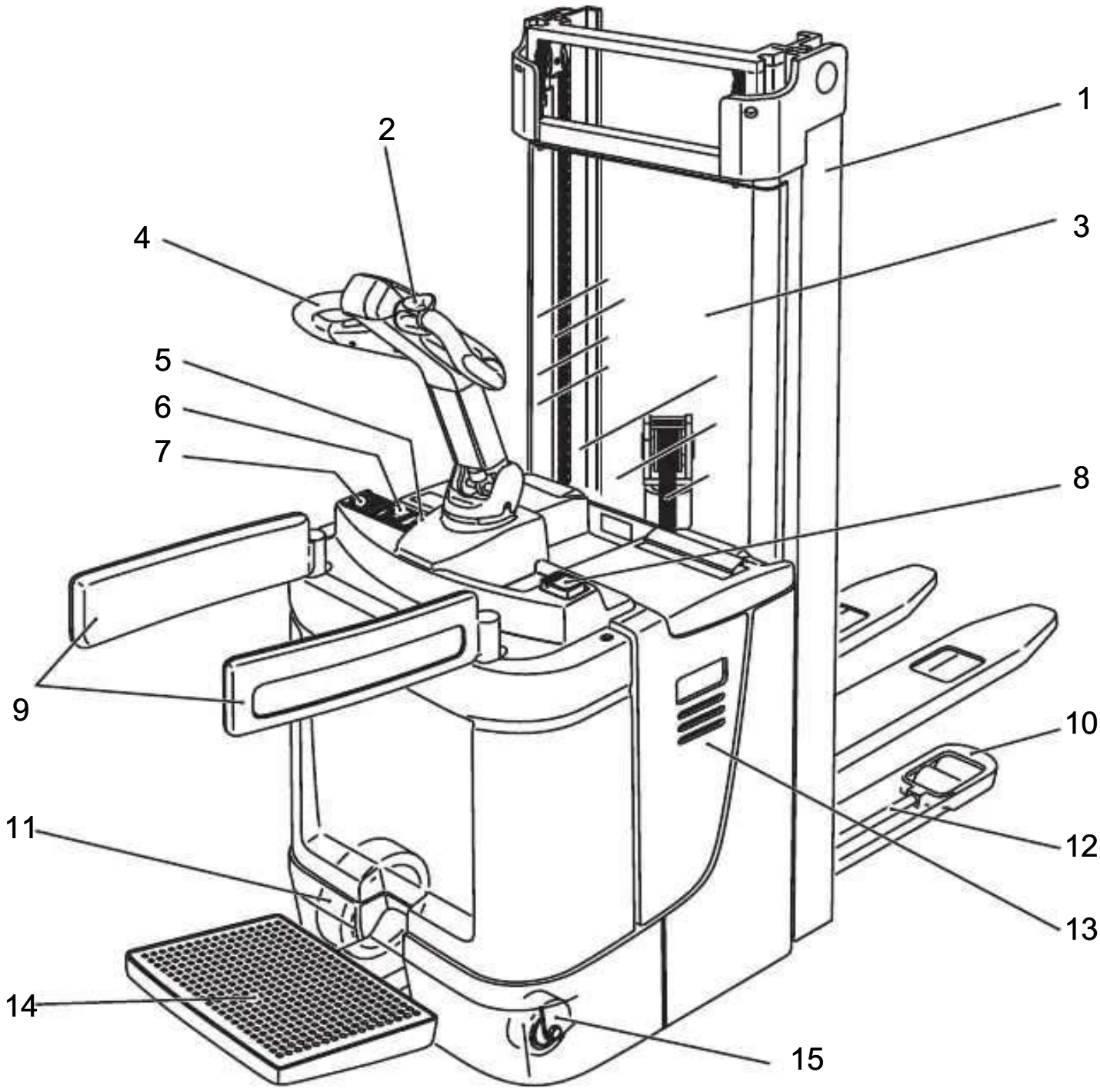

Item		Name	Item		Name
1	●	Mast	9	○	Folding side restraint *)
2	●	Travel switch	10	●	Wheel arms
4	●	Tiller	11	●	Drive wheel
5	●	Key switch	12	○	Lift linkage (wheel arm lift only)
6	○	CanDis	13	○	Charger
7	○	CanCode	14	●	Folding operator platform
8	●	Emergency Disconnect (main switch)	3	●	Mast guard
15	●	Castor wheel		○	Load backrest (for cold store operation)
● = Standard version			○ = Option		

*) Not on trucks with 1200 kg capacity.

https://www.besttruckmanuals.com/

2.2 Functional Description

Safety Mechanisms

– An enclosed, smooth truck geometry with rounded edges ensures safe handling of the truck.
– The wheels are surrounded by a solid skirt.
– Pressing the Emergency Disconnect switch rapidly cuts out all electrical functions in hazardous situations.

Hydraulic system

– Lifting and lowering are activated via the lift and lower buttons.
– When lifting is activated, the pump unit starts to operate, supplying hydraulic oil from the oil reservoir to the lift cylinder.

Emergency Stop safety feature

– The emergency stop is activated by the traction controller.
– The steering controller sends a system status signal which is monitored by the traction controller. If the signal fails to appear or a fault is identified the truck automatically brakes to a halt. Control displays on the driver's display indicate the emergency stop.
– Each time the truck is switched on the system performed an automatic diagnosis.

Operator Position

– All travel and lift operations can be performed sensitively without having to reach.
– Tiller for reliable control of the industrial truck.
– The industrial truck has a folding standing platform and movable side arm. The industrial truck can also optionally be equipped with a fixed standing platform and rigid side arm.

Operator platform

– Travel functions are only released when the driver stands on the operator platform.

Drive system

– A fixed DC motor actuates the drive wheel via a bevel spur gearbox.
– The electronic traction controller ensures smooth drive motor speed control and hence smooth travel, powerful acceleration and electrically controlled braking.

Steering

– The driver steers with a tiller.
– The steering motion is transmitted directly from the steering controller via a steer motor directly to the ring gear of the pivoted drive system.
– The progressive electric steering allows for a 90° turn of the drive wheel when the tiller is turned only 70°.

Electric steering (○)

– The electric steering system is self-monitoring.
The steering controller permanently monitors the entire steering system. If an error is detected the traction controller interrupts travel and the magnetic brake is applied.

Electrical System

– 24 volt system.

https://www.besttruckmanuals.com/

– Standard electronic traction, lift and steering control are standard.

Controls and displays

– Ergonomic controls ensure fatigue-free operation for sensitive application of travel operations.
– The battery discharge indicator shows the available battery capacity.
– The optional CanDis displays show the key driver information and travel program, service hours, battery capacity and error messages.

Mast

– The maximum strength steel sections are narrow, allowing for outstanding fork visibility in particular with the three-stage mast.
– The lift rails and the fork carriage run on permanently-lubricated and hence maintenance-free angled rollers.

https://www.besttruckmanuals.com/

3 Technical Specifications

➔ Technical specification details in accordance with VDI 2198. Technical modifications and additions reserved.

3.1 Performance data

		ERC 212 / Z12	ERC 214 / Z14	ERC 216 / Z16	
Q	Rated capacity	1200	1400	1600	kg
c	Load centre distance with standard fork length	600	600	600	mm
	Travel speed with restraint system w / w.o. rated load	9,0 / 9,0	9,0 / 9,0	9,0 / 9,0	km/h
	Lift speed with / without rated load (adjustable (ZT))	0,13 / 0,22	0,16 / 0,25	0,15 / 0,25	m/s
	Lower speed with / without rated load (adjustable (ZT))	0,43/0,37	0,37/0,34	0,37/0,34	m/s
	Max. gradeability (over 5 mins) w / w.o. load	10/16	9 / 16	8 / 16	%

https://www.besttruckmanuals.com/

3.2 Dimensions

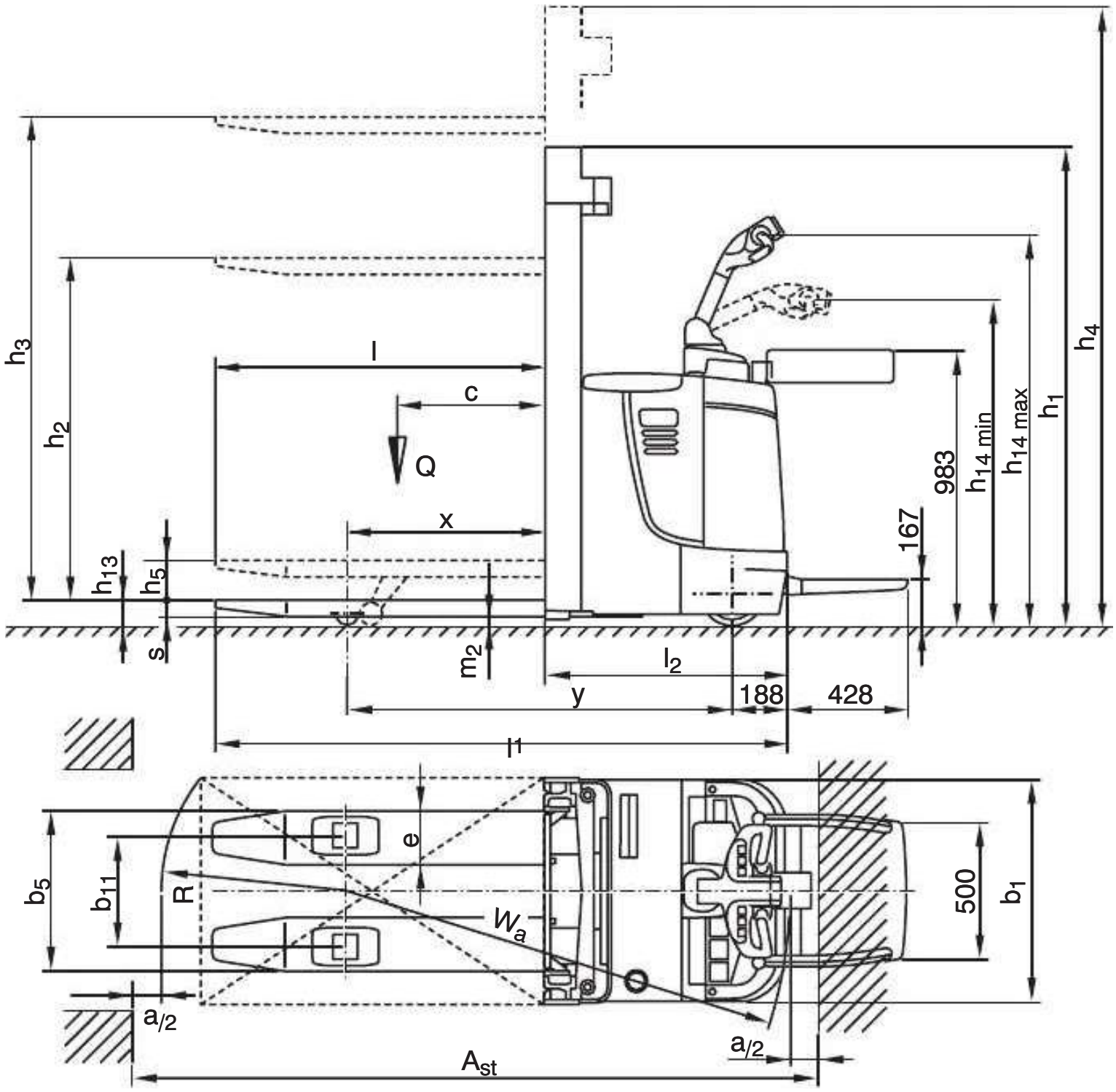

https://www.besttruckmanuals.com/

		ERC 212/212Z	ERC 214/214Z	ERC 216/216Z	
l1	Overall length	2046	2067	2067	mm
l2	Headlength	896	917	917	mm
h1	Mast height retracted	1950	1950	1950	mm
h2	Free lift	100	100	100	
h3	Lift	2900	2900	2800	mm
h4	Mast height extended	3375	3375	3325	mm
h5	Initial lift	122	122	122	mm
h13	Lowered fork height	90	90	90	mm
h14	Tiller height in min./max. travel position	1158/1414	1158/1414	1158/1414	mm
y	Wheelbase	1336	1357	1357	mm
x	Load distance	688	688	688	mm
b1	Overall width	800	800	800	mm
b5	Outside straddle	570	570	570	mm
b10	Track width, front	507	507	507	mm
b11	Track width, rear	400	400	400	mm
s/e/l	Fork spread	56/185/1150	56/185/1150	56/185/1150	mm
m2	Ground clearance centre wheelbase	30	30	30	mm
Wa	Turning radius	1597	1618	1618	mm
Ast	Working aisle width for pallets 1000 x 1200	2414*) / 2483*)	2414*) / 2483*)	2414**)/ 2483**)	mm
Ast	Working aisle width for pallets 1000 x 1200	2441*) / 2565*)	2441*) / 2565*)	2441**) / 2565**)	mm
	Net weight:	See truck data plate			

*) for DZ + 35

**) for DZ +43

https://www.besttruckmanuals.com/

3.3 Weights

Name	ERC 212 / Z12	ERC 214 / Z14	ERC 216 / Z16	
	Standard 290 ZT mast		280 ZT	
Net weight (including battery)	1160	1220	1230	kg
Axle load, w. load front / rear	900/1460	970/1650	990/1840	kg
Axle load, w.o. load front / rear	840/320	880/340	880/350	kg

3.4 Tyre type

Name	ERC 212 / Z12	ERC 214 / Z14	ERC 216 / Z16	
Tyre size, front	230/77			mm
Tyre size, rear (single / tandem)	85x110 / 85x85	85x110 / 85x85	85x110 / 85x85	mm
Castor wheel	140x54			mm
Wheels, number front/rear (x = driven)	1x+1/ 2			

https://www.besttruckmanuals.com/

3.5 EN norms

Noise emission level

– ERC 212/214/216/Z12/Z14/Z16: 68 dB(A)

in accordance with EN 12053 as harmonised with ISO 4871.

➔ The noise emission level is calculated in accordance with standard procedures and takes into account the noise level when travelling, lifting and when idle. The noise level is measured at the level of the driver's ear.

Vibration

– ERC 212/214/216/Z12/Z14/Z16: 0,96 m/s²

in accordance with EN 13059

➔ The vibration acceleration acting on the body in the operating position is, in accordance with standard procedures, the linearly integrated, weighted acceleration in the vertical direction. It is calculated when travelling over thresholds at constant speed. These recordings were taken on a single occasion and must not be confused with the human vibrations of the "2002/44/EC/Vibrations" operator directive. The manufacturer offers a special service to measure these human vibrations, (see "Human vibration measurement" on page 106).

Electromagnetic compatibility (EMC)

The manufacturer confirms that the truck adheres to the limits for electromagnetic emissions and resistance as well as the static electricity discharge test in accordance with EN 12895 as well as the standardised instructions contained therein.

➔ No changes to electric or electronic components or their arrangement may be made without the written agreement of the manufacturer.

https://www.besttruckmanuals.com/

3.6 Conditions of use

Ambient temperature

– operating at +5°C to +40°C

➔ Special equipment and authorisation are required if the truck is to be constantly used in conditions of extreme temperature or air humidity fluctuations.

3.7 Electrical requirements

The manufacturer certifies compliance with the requirements for the design and manufacture of electrical equipment, according to EN 1175 "Industrial Truck Safety - Electrical Requirements", provided the truck is used according to its purpose.

https://www.besttruckmanuals.com/

4 Identification points and data plates

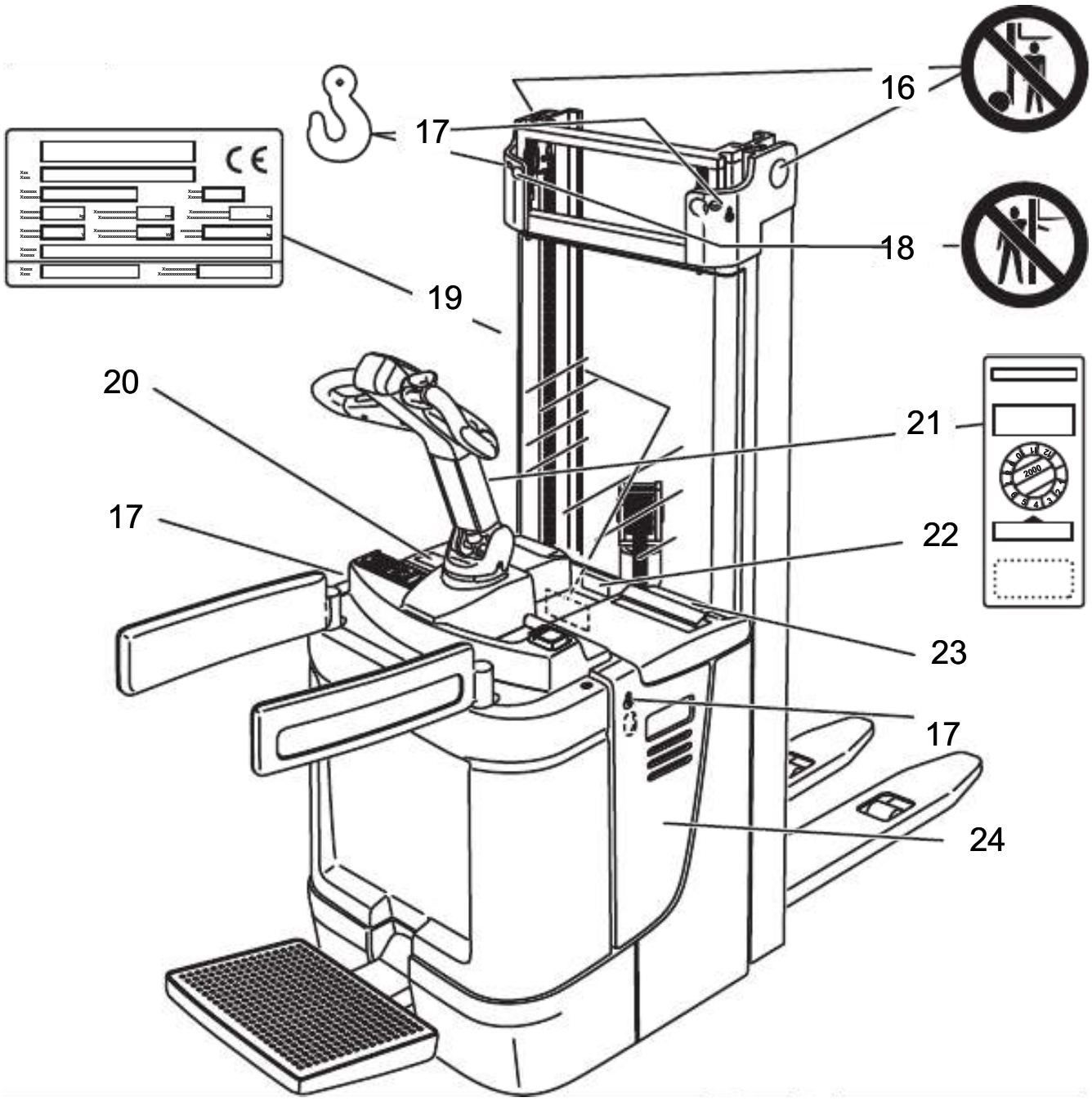

Item	Name
16	“Do not step under the load handler” warning
17	Strap points for crane lifting
18	"Do not reach through the mast" warning
19	Data plate
20	Capacity Qmax (ERC Z12/Z14/Z16 only)
21	Test plaque
22	Capacity Qmax
23	Serial number
24	Battery data plate

https://www.besttruckmanuals.com/

4.1 Data plate

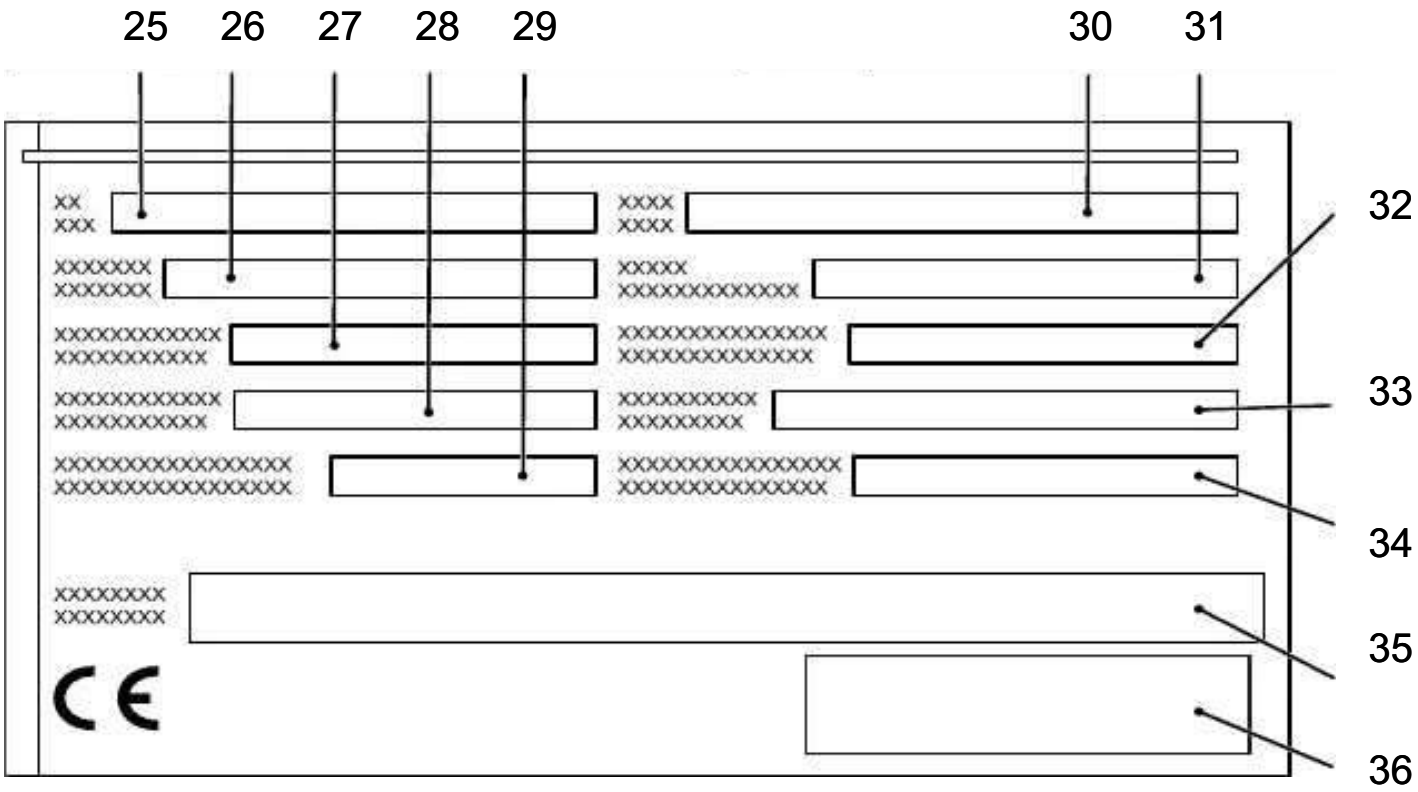

Item	Description	Item	Description
25	Type	31	Year of manufacture
26	Serial number	32	Load centre (mm)
27	Rated capacity (kg)	33	Output
28	Battery voltage (V)	34	Min./max. battery weight (kg)
29	Net weight w.o. battery (kg)	35	Manufacturer
30	Option	36	Manufacturer's logo

➔ For queries regarding the truck or ordering spare parts always quote the truck serial number (26).

https://www.besttruckmanuals.com/

4.2 Truck load chart

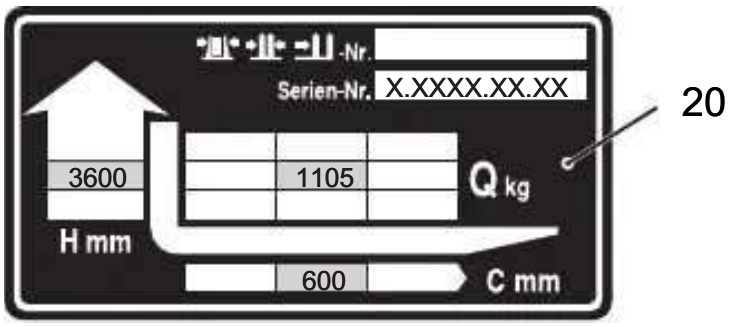

The load chart (20) indicates the maximum capacity Q (in kg) for a given load centre C (in mm) and corresponding lift height H (in mm) for the truck with a horizontal load.

Example of calculating the maximum capacity:
With a load centre of gravity distance C of 600 mm and a maximum lift height H of 3600 mm. the max. capacity Q is 1105 kg.

The arrow shape markings ("37" and "37") on the inner mast and bottom cross member indicate to the driver when he has exceeded the height limits specified by the capacity plate (21).

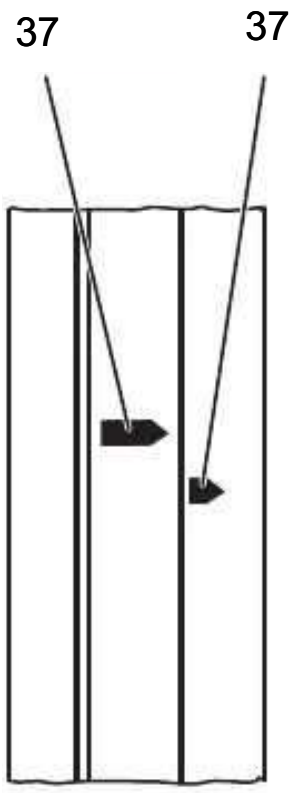

https://www.besttruckmanuals.com/

4.3 Capacity, wheel arm lift

For trucks with wheel arm lift the additional plate (20) indicates the permissible spread for wheel arm lift and Main Lift.

4.4 Plate, order, inventory and service nos.

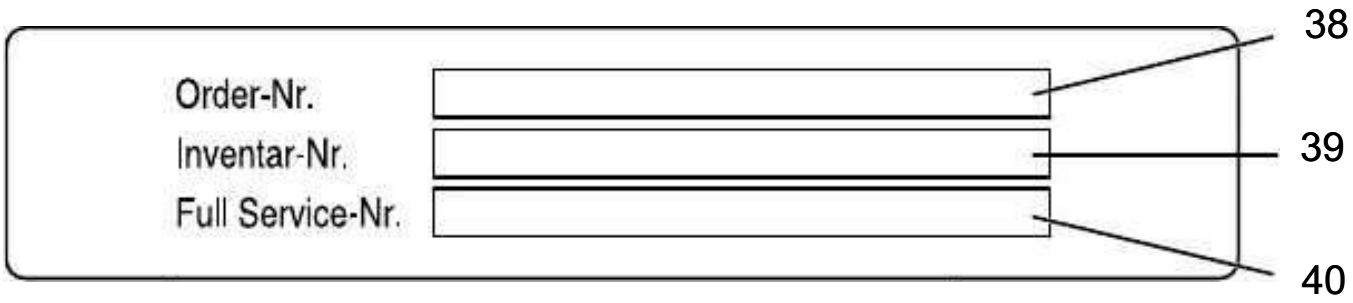

Item	Name
38	Order no.
39	Inventory no.
40	Full service no.

➔ The capacity plate with the full service number is only issued when a service agreement has been reached.

https://www.besttruckmanuals.com/

C Transport and Commissioning

1 Lifting by crane

WARNING!

Improper lifting by crane can result in accidents

The use of unsuitable lifting gear can cause the truck to crash when being lifted by crane.

Prevent the truck from striking other objects when it is being raised, and avoid any involuntary movements. If necessary secure the truck with guide ropes.

- ▶ The truck should only be handled by people who are trained in using lifting slings and tools.
- ▶ Wear safety shoes when lifting the truck by crane.
- ▶ Do not stand under a swaying load.
- ▶ Do not walk into or stand in a hazardous area.
- ▶ Always use lifting gear with sufficient capacity (for truck weight see truck data plate).
- ▶ Always attach the crane slings to the prescribed strap points and prevent them from slipping.
- ▶ Use the lifting gear only in the prescribed load direction.
- ▶ Crane slings should be fastened in such a way that they do not come into contact with any attachments when lifting.

Lifting the truck by crane

Requirements

– Park the industrial truck securely, (see "Parking the truck securely" on page 55).

Tools and Material Required

– Lifting gear
– Crane lifting gear

Procedure

- Secure the crane lifting gear to the attachment points (17).

The industrial truck can now be lifted by crane.

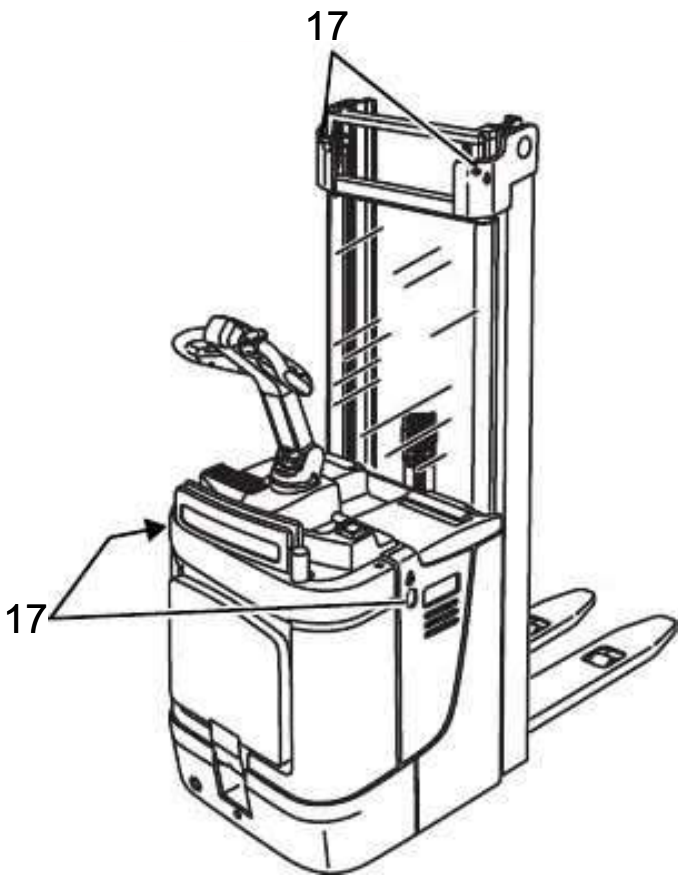

https://www.besttruckmanuals.com/

2 Transport

WARNING!

Accidental movement during transport

Improper fastening of the truck and mast during transport can result in serious accidents.

▶Loading must be carried out by specially trained staff in accordance with recommendations contained in Guidelines VDI 2700 and VDI 2703 In each case correct measurements must be made and appropriate safety measures adopted.

▶The truck must be securely fastened when transported on a lorry or a trailer.

▶The lorry / trailer must have fastening rings.

▶Use wedges to prevent the truck from moving.

▶Use only tension belts or tie-down straps or with sufficient strength.

Securing the truck for transport

Tools and Material Required

– Tension belts/tie down straps

Procedure

- Move the truck onto the transporting truck.
- Park the truck securely, (see "Parking the truck securely" on page 55).
- Strap the belts (41) around the truck and tension them sufficiently.

The truck can now be transported.

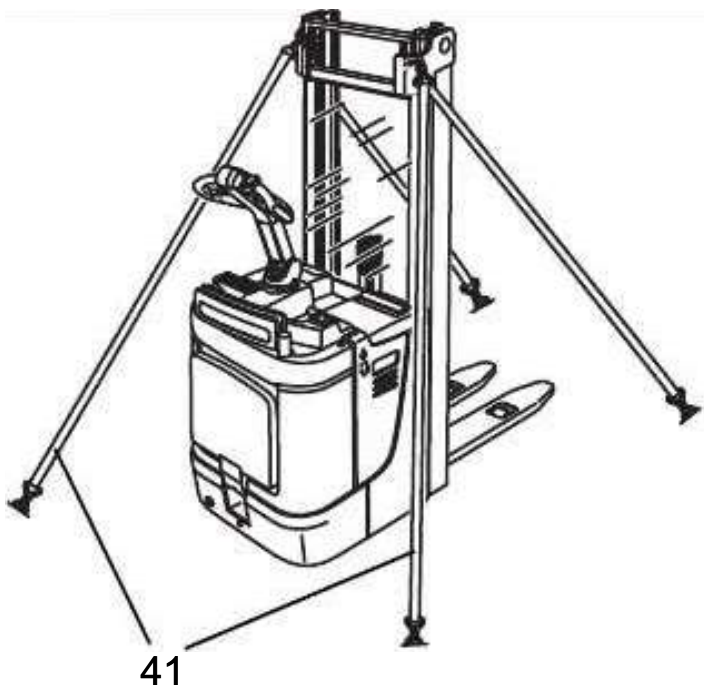

https://www.besttruckmanuals.com/

3 Using the Truck for the First Time

CAUTION!

Operate the truck with battery current only. Rectified AC current will damage the electronic components. Cable connections to the battery (tow leads) must be less than 6 m long and have a minimum cross-section of 50 .

Procedure

- Check the equipment is complete.
- If necessary install the battery, (see "Battery removal and installation" on page 42)

  If necessary, adjust the combination instrument to match the battery type.
- Charge the battery, (see "Charging the battery" on page 35).

  For trucks with an optionally fitted charger set the charger characteristic curve (charging curve).

The truck can now be started, (see "Starting up the truck" on page 52)

https://www.besttruckmanuals.com/

https://www.besttruckmanuals.com/

D Battery - Servicing, Recharging, Replacement

1 Safety Regulations Governing the Handling of Lead-Acid Batteries

Maintenance personnel

Batteries may only be charged, serviced or replaced by trained personnel. This operator manual and the manufacturer's instructions concerning batteries and charging stations must be observed when carrying out the work.

Fire protection

Do not smoke and avoid naked flames when handling batteries. Wherever an industrial truck is parked for charging there shall be no inflammable material or lubricants capable of creating sparks within 2 m around the truck. The room must be ventilated. Fire protection equipment must be on hand.

Battery maintenance

The battery cell covers must be kept dry and clean. The terminals and cable shoes must be clean, secure and have a light coating of dielectric grease.

⚠ CAUTION!

Before closing the battery panel make sure that the battery cable cannot be damaged. There is a risk of short circuits with damaged cables.

Battery disposal

Batteries may only be disposed of in accordance with national environmental protection regulations or disposal laws. The manufacturer's disposal instructions must be followed.

https://www.besttruckmanuals.com/

WARNING!

Batteries can be hazardous

Batteries contain an acid solution which is poisonous and corrosive. Above all avoid any contact with battery acid.

- ▶ Dispose of used battery acid in accordance with regulations.
- ▶ Always wear protective clothing and goggles when working with batteries.
- ▶ Do not let battery acid come into contact with skin, clothing or eyes. If necessary, rinse with plenty of clean water.
- ▶ Call for a doctor immediately in the event of physical damage (e.g. skin or eye contact with battery acid).
- ▶ Neutralise any spilled battery acid immediately with plenty of water.
- ▶ Only batteries with a sealed battery container may be used.
- ▶ Follow national guidelines and legislation.

WARNING!

Using unsuitable batteries can cause accidents

The weight and dimensions of the battery have a considerable effect on the operational safety and capacity of the industrial truck. Changing the battery features requires the manufacturer's approval, as compensating weights are required if smaller batteries are fitted. When replacing/installing the battery make sure the battery is securely located in the battery compartment of the truck.

Park the truck securely before carrying out any work on the batteries ((see "Parking the truck securely" on page 55)).

2 Battery types

Depending on the model, the truck will be supplied with different battery types. The following table shows which combinations are included as standard:

Battery type	Capacity
24 volt battery	3 PzS 240 Ah
24 volt battery	3 PzS 270 Ah
24 volt battery	3 PzS 375 Ah
24 volt battery	3 PzV 210 Ah
24 volt battery	3 PzV 300 Ah

The battery weights can be taken from the battery data plate. Batteries with non insulated terminals must be covered with a non slip insulating mat.

https://www.besttruckmanuals.com/

3 Exposing the battery

CAUTION!

Trapping hazard

▶ Make sure there is nothing between the battery cover and the truck when you fit the battery cover.

WARNING!

An unsecured truck can cause accidents

Parking the truck on an incline or with a raised load handler is dangerous and is strictly prohibited.

▶ Always park the truck on a level surface. In special cases the truck may need to be secured with wedges.

▶ Always fully lower the mast and forks.

▶ Select a place to park where no other people are at risk of injury from lowering forks.

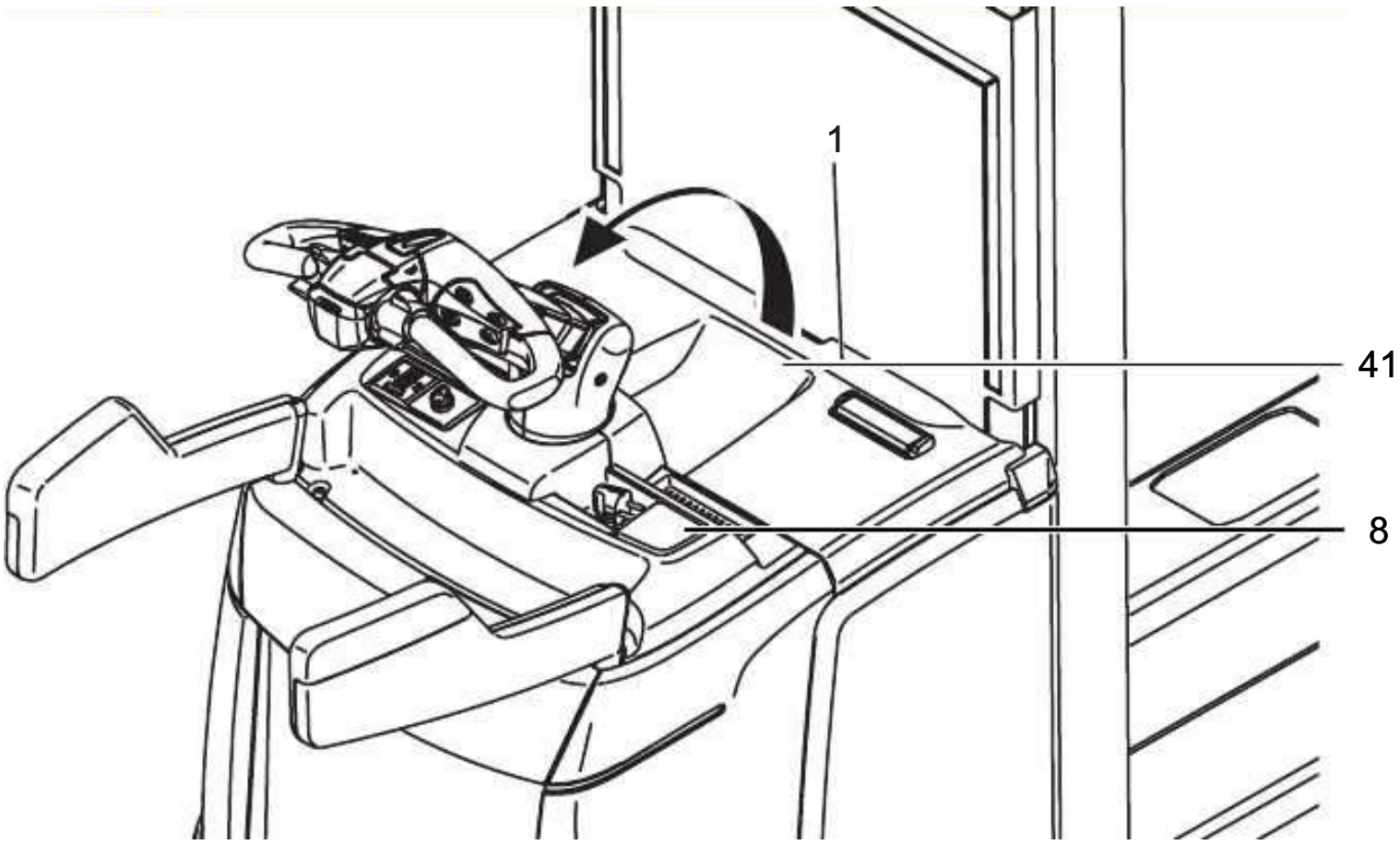

https://www.besttruckmanuals.com/

Requirements

– Park the truck on a level surface.
– Park the truck securely, (see "Parking the truck securely" on page 55).

Procedure

- Depress the Emergency Disconnect (8).
- Open the battery panel (41).

CAUTION!

A closing battery panel can pose a trapping hazard

▶ Make sure the battery panel engages in the restraint when opened.

The battery is exposed.

https://www.besttruckmanuals.com/

4 Charging the battery

WARNING!

The gases produced during charging can cause explosions

The battery produces a mixture of nitrogen and hydrogen (electrolytic gas) during charging. Gassing is a chemical process. This gas mixture is highly explosive and must not be ignited.

▶ Switch the charging station and truck off first before connecting/disconnecting the charging cable of the battery charging station to/from the battery connector.

▶ The charger must be adapted to the battery in terms of voltage and charge capacity.

▶ Before charging, check all cables and plug connections for visible signs of damage.

▶ Ventilate the room in which the truck is being charged.

▶ The battery cover must be open and the battery cell surfaces must be exposed during charging to ensure adequate ventilation.

▶ Do not smoke and avoid naked flames when handling batteries.

▶ Wherever an industrial truck is parked for charging there shall be no inflammable material or lubricants capable of creating sparks within 2 m around the truck.

▶ Fire protection equipment must be on hand.

▶ Do not lay any metallic objects on battery.

▶ It is essential to follow the safety regulations of the battery and charger station manufacturers.

Charging the battery

Requirements

– Park the truck on a level surface.
– Expose the battery, (see "Exposing the battery" on page 33).
– Disconnect the battery

Procedure

- Remove the battery connector (43) from the plug connection on the truck (42).
- Remove any insulating mats from the battery.
- Connect the charger lead of the battery charger station to the battery connector (43).
- Switch on the charger. Charging begins automatically.

The battery is now charged.

https://www.besttruckmanuals.com/

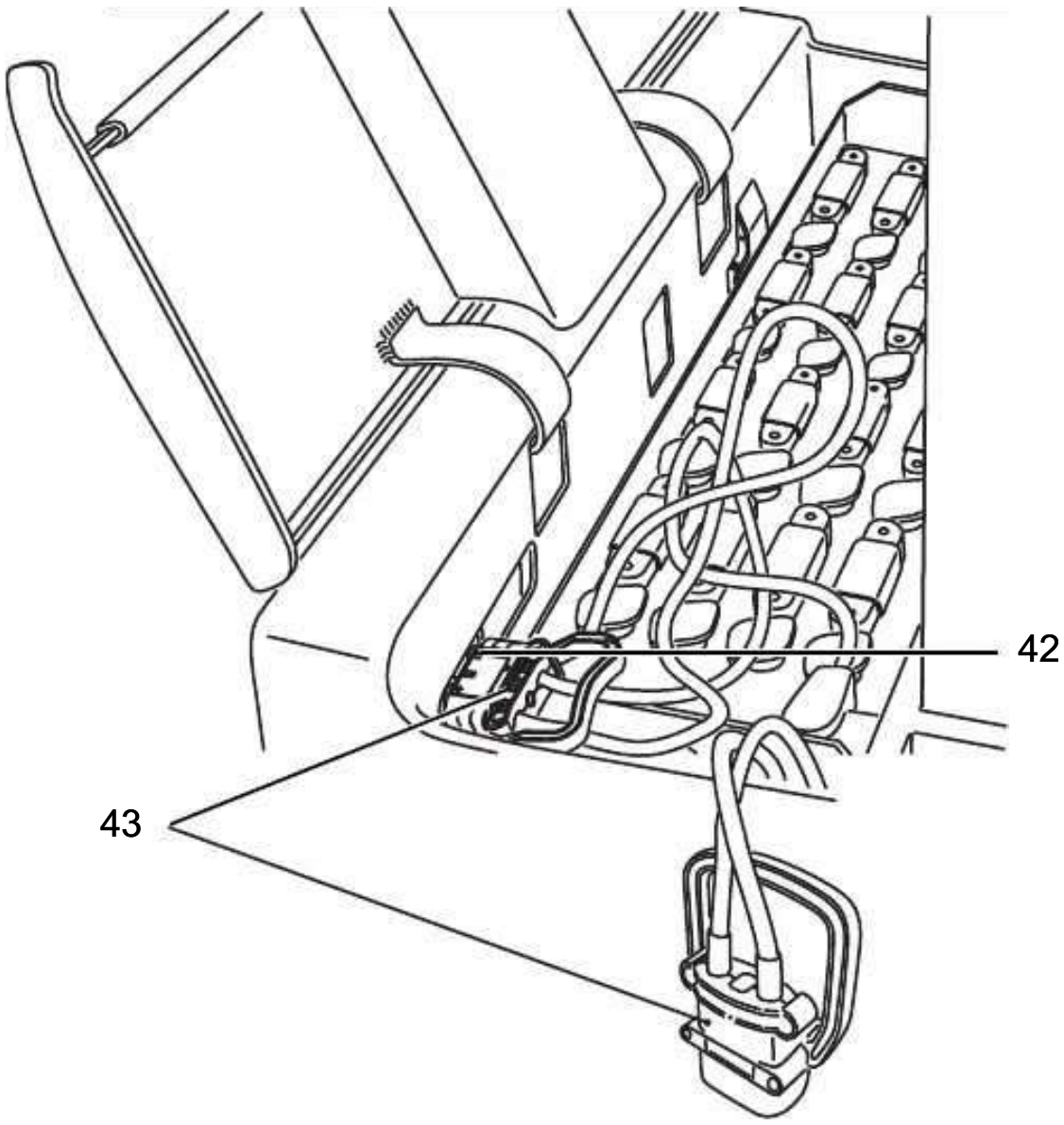

Completing the battery charge, restoring the truck to operation

NOTE

If charging has been interrupted, the full battery capacity will not be available.

Requirements

– Battery charging is complete.

Procedure

- Switch off the charger.
- Disconnect the battery from the charger.
- Connect the battery to the truck.
- Close the battery panel securely.

The truck is now ready for operation.

https://www.besttruckmanuals.com/

4.1 Charging the battery with an on-board charger

DANGER!

Risk of electric shock and burning

Damaged and unsuitable wires can cause electric shocks and can overheat, resulting in fires.

▶ Only use mains cables with a maximum length of 30 m.
Local regulations must be observed.

▶ Fully unreel the cable reel when using it.
▶ Always use original manufacturer's mains cables.
▶ Insulation safety, acid and caustic ratings must comply with the manufacturer's mains cable.

NOTE

Improper use of the on-board charger can cause material damage.

The on-board charger consisting of a battery charger and battery controller must not be opened. For faults, contact the manufacturer's service department.

▶ The charger must only be used for batteries supplied by Jungheinrich or other approved batteries provided it has been adapted by the manufacturer's service department.
▶ Batteries must never be swapped from truck to truck.
▶ Do not connect the battery to two chargers simultaneously.

The factory setting for trucks without a battery is the 0 position. A battery discharge indicator, a charge/discharge indicator, a CanDis or a bipolar LED can be attached to the connector (45).

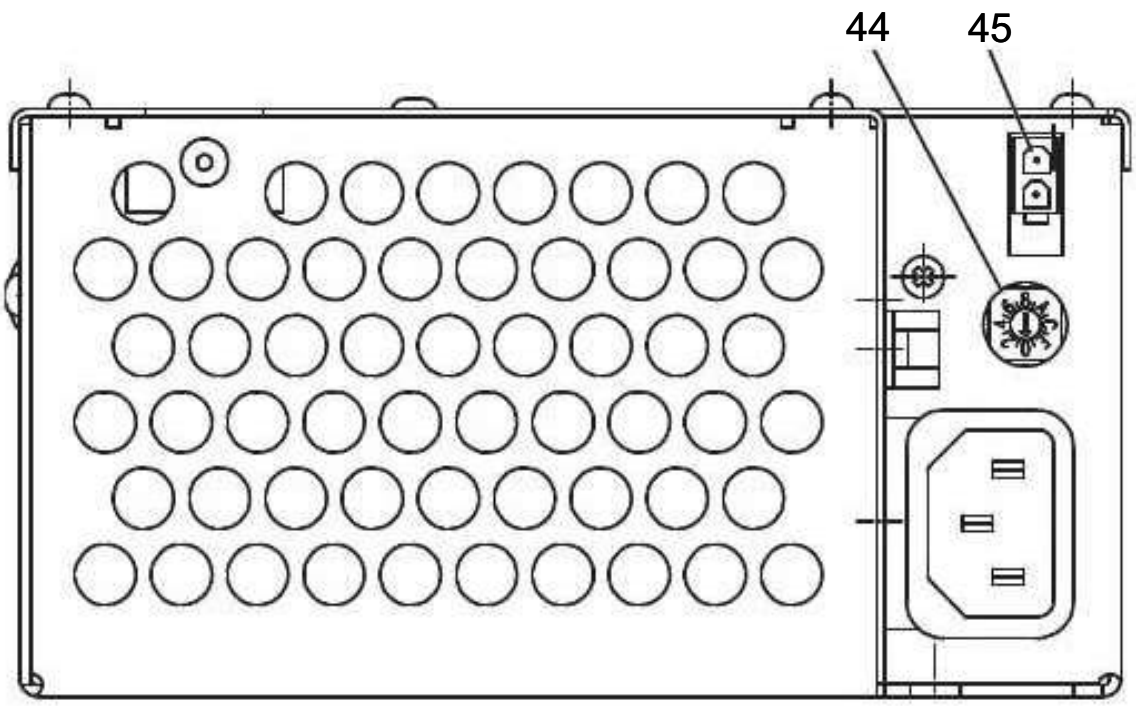

Setting the charging characteristics

CAUTION!

▶ Remove the mains connector before setting the respective charging curve.

---

https://www.besttruckmanuals.com/

Set the charging characteristic

Requirements

– Battery connected.

Procedure

- Turn the setting switch (44) on the charger right to adapt the charging curve to the battery being used.
- The validity of the new setting is acknowledged by the flashing of the green LED and the setting takes immediate effect.

The charging characteristic is now set.

Switch setting / charging curve assignment

Switch position (44)	Selected charging curves (characteristics)
0	Truck without battery
1	Wet cell battery: PzS with 100 - 300 Ah Wet cell battery: PzM with 100 - 180 Ah
2	Maintenance-free: PzV with 100 - 149 Ah
3	Maintenance-free: PzV with 150 - 199 Ah
4	Maintenance-free: PzV with 200 - 300 Ah
5	Wet cell battery: PzS with pulse characteristic 200 - 400 Ah Wet cell battery: PzM with pulse characteristic 180 - 400 Ah
6	Jungheinrich 100 - 300 Ah

NOTE

▶ All other switch positions (44) block the charger, and the battery is not charged.

▶ For PzM batteries with a capacity of less than 180 Ah set characteristic 1, beyond 180 Ah set characteristic 5.

▶ With PzS 200-300 Ah wet cell batteries both characteristic curves 1 and 5 can be used. Characteristic 5 achieves a faster charge.

▶ When the battery is connected this allows you to adjust via the charger: If the switch position is valid the green LED flashes according to the position set; if the switch position is invalid the red LED flashes.

https://www.besttruckmanuals.com/

Starting to charge with the onboard charger

Mains connection

Mains voltage: 230 V / 110 V (+10/-15%)
Mains frequency: 50 Hz / 60 Hz

The mains cable of the charger (46) is contained in the front panel or the battery compartment.

Charge the battery

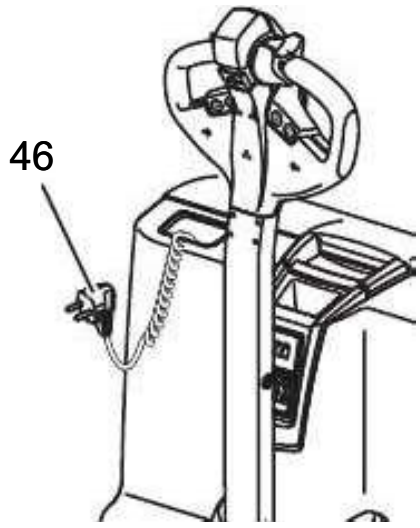

Requirements

– Park the truck securely, (see "Parking the truck securely" on page 55).
– Expose the battery, (see "Exposing the battery" on page 33).
– Correct charging program set on charger.

Procedure

- Remove any insulating mats from the battery.
- The battery connector must remain plugged.
- Attach the mains connector (46) to a mains socket.
- Pull Emergency Disconnect switch up.
  The flashing LED indicates the charge status or a fault (for flashing codes see “LED Display” table).

The battery is now charged.

➔ *When the mains connector (46) is connected to the mains, all the truck’s electrical functions are disconnected (electric immobilizer). The truck cannot be operated.*

https://www.besttruckmanuals.com/

Completing the battery charge, restoring the truck to operation

NOTE

If charging has been interrupted, the full battery capacity will not be available

Requirements

– Battery charging is complete.

Procedure

- Remove the mains connector (46) from the socket and store it in the battery compartment with the cable.
- If applicable, place the existing insulating mats back over the battery.
- Close the battery cover securely.

The truck is now ready for operation.

Charging times

The duration of charge depends on the battery capacity.

➔ Charging continues automatically after a mains failure. Charging can be interrupted by removing the mains connector and continued as partial charging.

https://www.besttruckmanuals.com/

LED display (47)

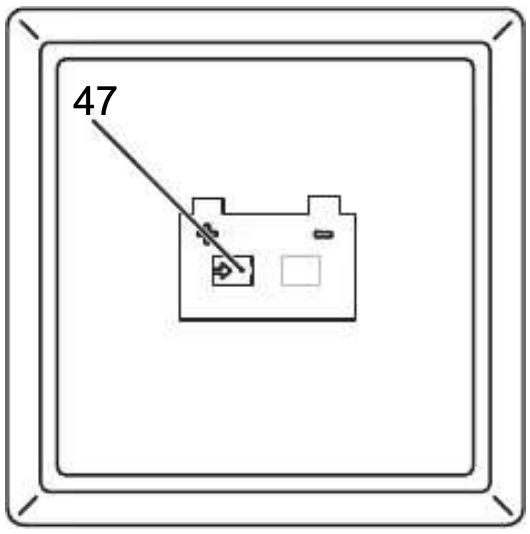

Green LED (charge status)	
Lit	Charging complete, battery full. (Charge interval, float or compensation charge).
Flashes slowly	Charging.
Rapid flash	Display at beginning of charge or after setting a new characteristic curve. Number of flash pulses corresponds to the characteristic curve set.

Red LED (fault)	
Lit	Overtemperature. Charging is interrupted.
Flashes slowly	Safety charging time exceeded. Charging is cancelled. Mains must be disconnected for charging to restart.
Rapid flash	Invalid characteristic curve setting.

Compensation charge

The compensation charge starts automatically when charging is complete.

Partial charging

The charger is designed to automatically adapt to partially charged batteries. This keeps battery wear to a minimum.

https://www.besttruckmanuals.com/

5 Battery removal and installation

WARNING!

Accident risk during battery removal and installation

Due to the battery weight and acid there is a risk of trapping or scalding when the battery is removed and installed.

- ▶Note the "Safety regulations for handling acid batteries" section in this chapter.
- ▶Wear safety shoes when removing and installing the battery.
- ▶Use only batteries with insulated cells and terminal connectors. If necessary cover them with a rubber mat.
- ▶Park the truck on a level surface.
- ▶Make sure the crane lifting gear has sufficient capacity to replace the battery.
- ▶Use only approved battery replacement devices (battery roller stand, replacement trolley etc.).
- ▶Make sure the battery is securely located in the truck's battery compartment.

CAUTION!

Trapping hazard

There is a risk of trapping when you close the battery cover.

- ▶Make sure there is nothing between the battery cover and the truck when you close the battery cover.

---

https://www.besttruckmanuals.com/

5.1 Changing the battery from the top, trucks without wheel arm lift

Removing the battery

Requirements

– Park the truck securely, (see "Parking the truck securely" on page 55).
– Expose the battery, (see "Exposing the battery" on page 33).

Procedure

- Disconnect the battery connector from the truck connector.

➔ Place the battery cable on the tray so that it cannot be severed when the battery is pulled out.

- Strap the crane lifting gear to the eyes (48).

➔ The crane lifting gear must exert a vertical pull. The hooks of the lifting gear must never fall into the battery cells.

- Pull the battery up out of the container.

➔ Installation is the reverse order. When reinstalling the battery, note the proper installation position and make sure the battery is connected correctly. Place the battery cable on the tray so that it cannot be severed when the battery is inserted.

– After installing the battery, check all cables and plug connections for visible signs of damage.

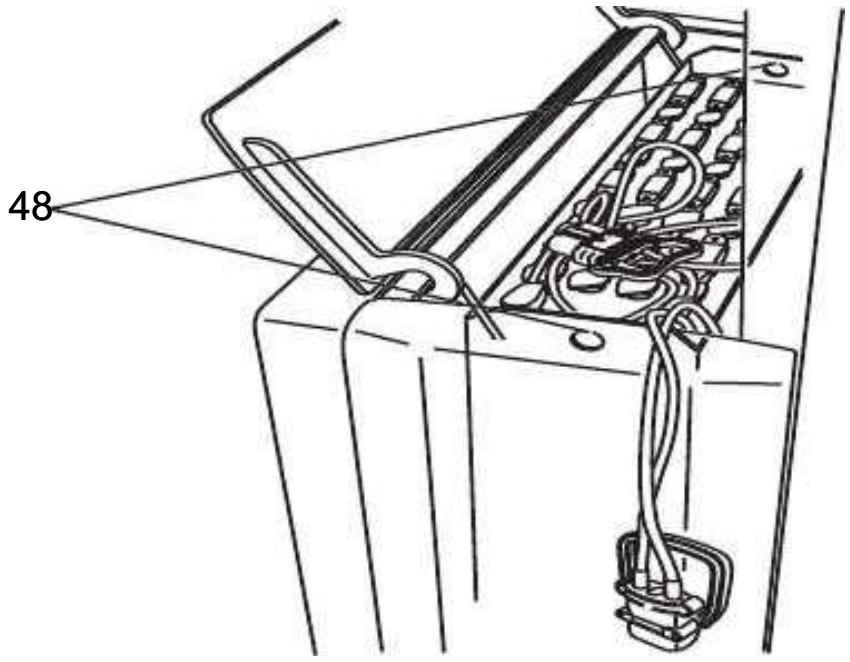

https://www.besttruckmanuals.com/

5.2 Changing the battery from the top, trucks with wheel arm lift

Removing the battery

Requirements

– Park the truck securely, (see "Parking the truck securely" on page 55).
– Expose the battery, (see "Exposing the battery" on page 33).

Procedure

- Disconnect the battery connector from the truck connector.

➔ Place the battery cable on the tray so that it cannot be severed when the battery is pulled out.

- Strap the crane lifting gear to the eyes (48).

➔ The crane lifting gear must exert a vertical pull. The hooks of the lifting gear must never fall into the battery cells.

- Pull the battery up out of the container.

➔ Installation is the reverse order. When reinstalling the battery, note the proper installation position and make sure the battery is connected correctly. Place the battery cable on the tray so that it cannot be severed when the battery is inserted.

– After installing the battery, check all cables and plug connections for visible signs of damage.

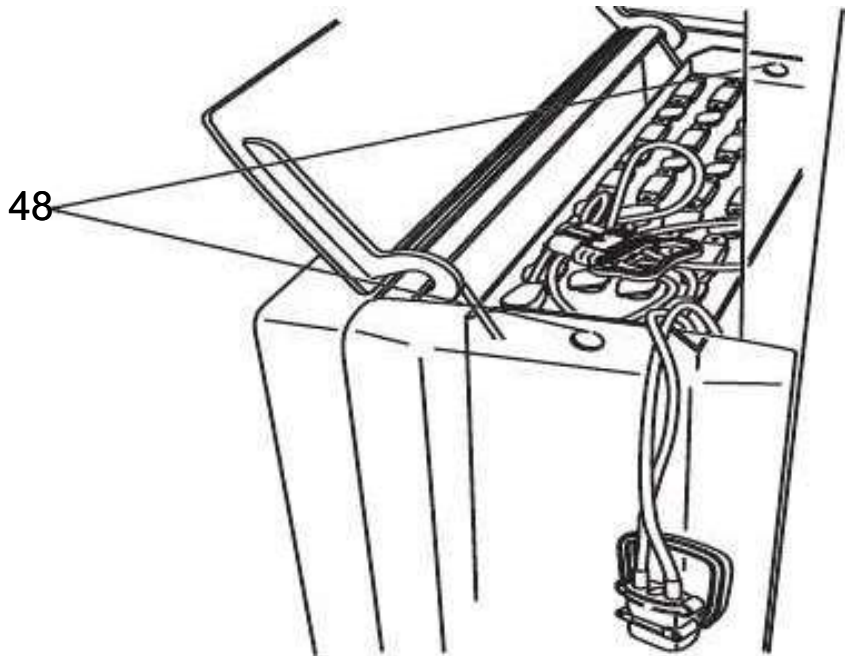

https://www.besttruckmanuals.com/

5.3 Removing the battery from the side

Lateral battery removal is an option only.

CAUTION!

Trapping hazard

Trapping hazard when removing and installing the battery.

▶When removing and installing the battery do not put your hands between the battery and the chassis.

Battery removal

Requirements

– Park the truck securely, (see "Parking the truck securely" on page 55).
– Expose the battery, (see "Exposing the battery" on page 33).

Procedure

- Turn the battery lock up (52) as far as the stop.
- Move the lever (43) to force the battery slightly beyond the perimeter of the truck.
- Position the battery trolley by the truck.
- Pull the battery (50) slightly towards you.
- Carefully pull the battery from off the truck onto the trolley.

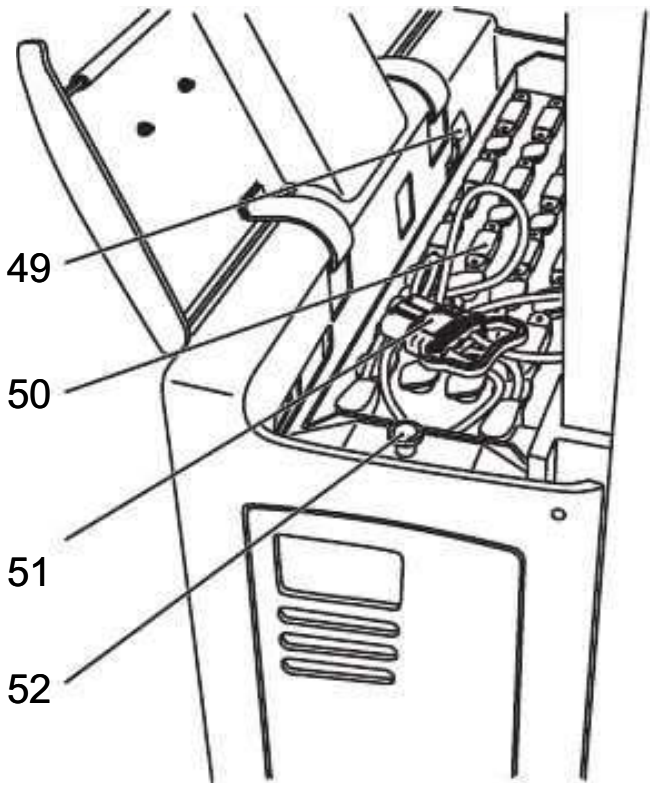

The battery is now removed.

Battery installation

Requirements

– Park the truck securely, (see "Parking the truck securely" on page 55).

Procedure

Installation is the reverse order. When reinstalling the battery, note the proper installation position and make sure the battery is connected correctly.

- Push the battery into its receptacle.
- Push the battery lock (52) towards the battery tray as far as the stop.
- Attach the battery connector (43) to the truck connector.

The battery is now assembled.

https://www.besttruckmanuals.com/

https://www.besttruckmanuals.com/

E Operation

1 Safety Regulations for the Operation of the Forklift Truck

Driver authorisation

The truck may only be used by suitably trained personnel, who have demonstrated to the proprietor or his representative that they can drive and handle loads and have been authorised to operate the truck by the proprietor or his representative.

Driver's rights, obligations and responsibilities

The driver must be informed of his duties and responsibilities and be instructed in the operation of the truck and shall be familiar with the operating instructions. The driver shall be afforded all due rights. Safety shoes must be worn for pedestrian operated trucks.

Unauthorised use of truck

The driver is responsible for the truck during the time it is in use. The driver must prevent unauthorised persons from driving or operating the truck. Do not carry passengers or lift other people.

Damage and faults

The supervisor must be immediately informed of any damage or faults to the truck or attachment. Trucks which are unsafe for operation (e.g. wheel or brake problems) must not be used until they have been rectified.

Repairs

The driver must not carry out any repairs or alterations to the truck without the necessary training and authorisation to do so. The driver must never disable or adjust safety mechanisms or switches.

Hazardous area

⚠ WARNING!

Risk of accidents / injury in the hazardous area of the truck

The hazardous area is defined as the area in which a person is at risk due to truck movement, lifting operations, the load handler (e.g. forks or attachments) or the load itself. This also includes areas which can be reached by falling loads or lowering operating equipment.

- ▶ Instruct unauthorised people to leave the hazardous area.
- ▶ Give a warning signal with plenty of time for people to leave.
- ▶ If unauthorised personnel are still within the hazardous area stop the truck immediately.

Safety devices and warning labels

Safety devices, warning signs ((see "Identification points and data plates" on page 23)) and warning instructions in the present operating instructions must be strictly observed.

https://www.besttruckmanuals.com/

2 Displays and Controls

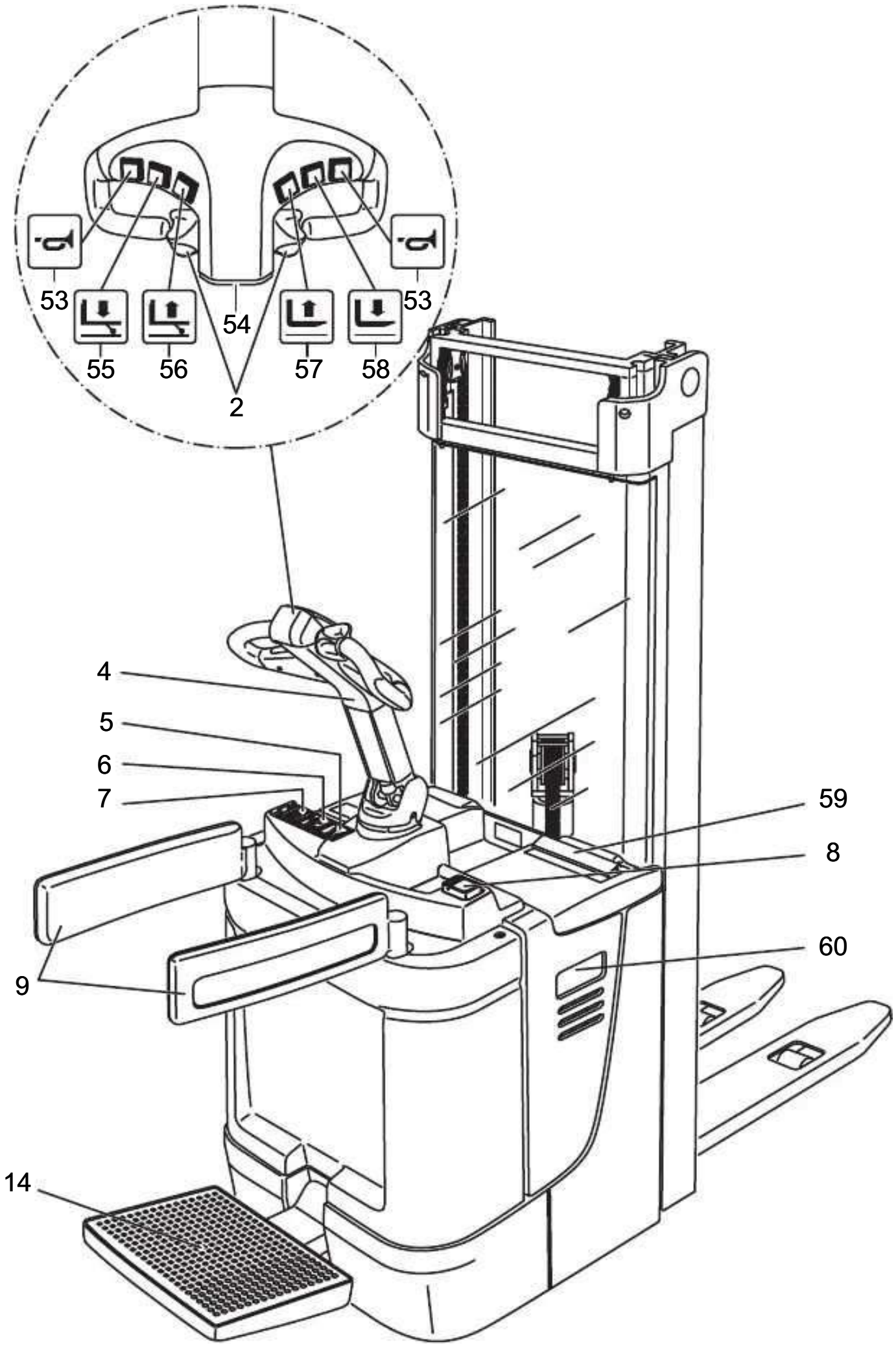

https://www.besttruckmanuals.com/

Item	Control / Display	ERC 212	ERC 214 / 216	ERC Z12 / Z14 / Z16	Function
53	Warning signal (horn) button	●	●	●	– “Warning” button
54	Collision safety switch	●	●	●	Pedestrian mode: Safety function – When applied the truck travels for approx. 3 seconds in the forks direction. The parking brake then applies. The truck remains switched off until the travel switch is set to neutral. Rider mode: – No function. (Optionally available from the factory.)
55	"Wheel arm lower" button	-	-	●	– Lowers the wheel arms at a constant speed.
56	"Wheel arm raise" button	-	-	●	– Raises the wheel arms at a constant speed.
57	“Lift” button	●	●	●	– Raises the lift mechanism.
58	“Lower” button	●	●	●	– Lowers the lift mechanism.
2	Travel switch	●	●	●	– Controls the direction of travel as well as the travel speed.
4	Tiller	●	●	●	– Set to brake zone (B) ((see "Emergency Disconnect, Travel, Steering, Braking" on page 59)): The truck brakes mechanically. – Set to travel zone (F) ((see "Emergency Disconnect, Travel, Steering, Braking" on page 59)): The mechanical brake is released and the truck is ready for operation.
5	Key switch and key	●	●	●	– Activates the industrial truck by switching on the control voltage. – Removing the key prevents the truck from being switched on by unauthorized personnel.
6	CanDis	○	○	○	Display instrument for – Battery charge status – Service hours – Warning messages – Parameter settings

https://www.besttruckmanuals.com/

Item	Control / Display	ERC 212	ERC 214 / 216	ERC Z12 / Z14 / Z16	Function
7	CanCode	○	○	○	Replaces the key switch – The truck is activated when you enter the appropriate code. – Travel program selection. – Code setting – Parameter setting.
9	Folding side restraint	-	●	●*)	When the side restraints are not unfolded and the operator platform is laden and unfolded: – travel inhibited.
14	Folding operator platform	●	●	●	Pedestrian mode – Operator platform folded up: Pedestrian speed restricted to max. 6.0 km/h. Rider mode, operator platform acts as a deadman: – Operator platform down and vacated: travel inhibited. – Operator platform down and laden by weight of operator (both restraints must be folded fully out or in): travel enabled.
59	Clip pad	●	●	●	– Paper storage.
8	Emergency Disconnect	●			Disconnects the battery supply – All electric functions are deactivated and the truck decelerates
60	On-board charger	○	○	○	– Charges the battery
● = Standard equipment					○ = Optional equipment

https://www.besttruckmanuals.com/

2.1 Battery discharge indicator

When the truck has been released via the key switch, code lock or ISM, the battery charge status is displayed. The LED (61) colours represent the following conditions:

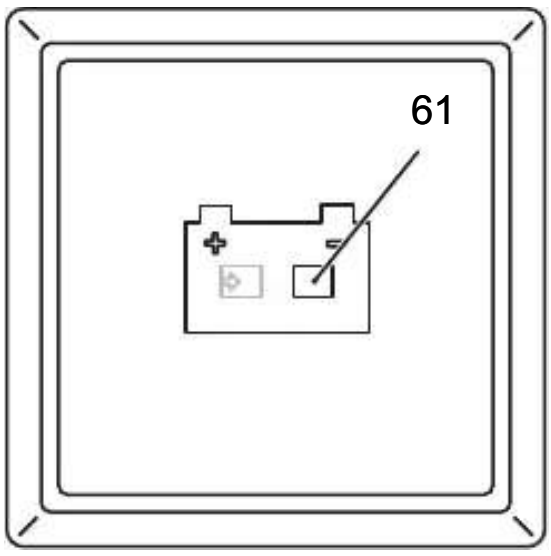

LED colour	Residual capacity
Green	40 - 100 %
Orange	30 - 40 %
Flashing green/orange 1Hz	20 - 30 %
Red	0 - 20 %

➔ If the LED is red, load units can no longer be lifted. Lifting is only enabled again when the battery connected is at least 70% charged.

If the LED flashes red and the truck is not ready for operation, inform the manufacturer's service department. Red flashing is a truck controller code. The flashing sequence indicates the type of fault.

https://www.besttruckmanuals.com/

3 Starting up the truck

3.1 Checks and operations to be performed before starting daily operation

WARNING!

Damage and other truck or attachment (special equipment) defects can result in accidents.

If damage or other truck or attachment (special equipment) defects are discovered during the following checks, the truck must be taken out of service until it has been repaired.

▶Report any defects immediately to your supervisor.

▶Tag out and decommission a faulty lift truck.

▶Only return the truck to service when you have identified and rectified the fault.

Pre-start inspections

Procedure

- Check the whole of the outside of the truck for signs of damage and leaks. Damaged hoses must be replaced immediately.
- Check the battery attachment and wire connections for damage and make sure they are secure.
- Check the battery connectors are secure.
- Check the load handler for visible signs of damage such as cracks, bent or severely worn forks.
- Check the drive wheel and load wheels for damage.
- Check that the markings and labels are present, clean and legible, (see "Identification points and data plates" on page 23).
- Test the Emergency Disconnect switch.
- Check the control handle (damper) is restored to its normal position.
- Check the controls are automatically restored to zero after being applied.
- Test the warning signal.
- Test the brakes.
- Test the collision safety switch.
- Check the steering play.
- Safety cutout height switch (mast), check cable connections and magnet attachment.

https://www.besttruckmanuals.com/

3.2 Preparing the truck for operation

Switching on the truck

Requirements

– For checks and operations to be performed before starting daily operation, (see "Checks and operations to be performed before starting daily operation" on page 52).

Procedure

- Step onto the operator platform (14).
- Pull out the Emergency Disconnect switch (8).
- Switch on the truck, to do this:
  - Insert the key in the key switch (5) and turn it to the right as far as it will go (position “I”) or for CANCODE (7,○) enter the activation code, (see "CanCode keypad" on page 72).
- Test the warning signal button (53).
- Test the travel switch (2).
- Test the steering.
- Test lifting operations.

The truck is operational.

⚠ WARNING!

Do not press the travel switch or the "pedestrian" button (○) when entering and exiting the truck.

➔ The CanDis display instrument (6(○)) indicates the available battery capacity.

https://www.besttruckmanuals.com/

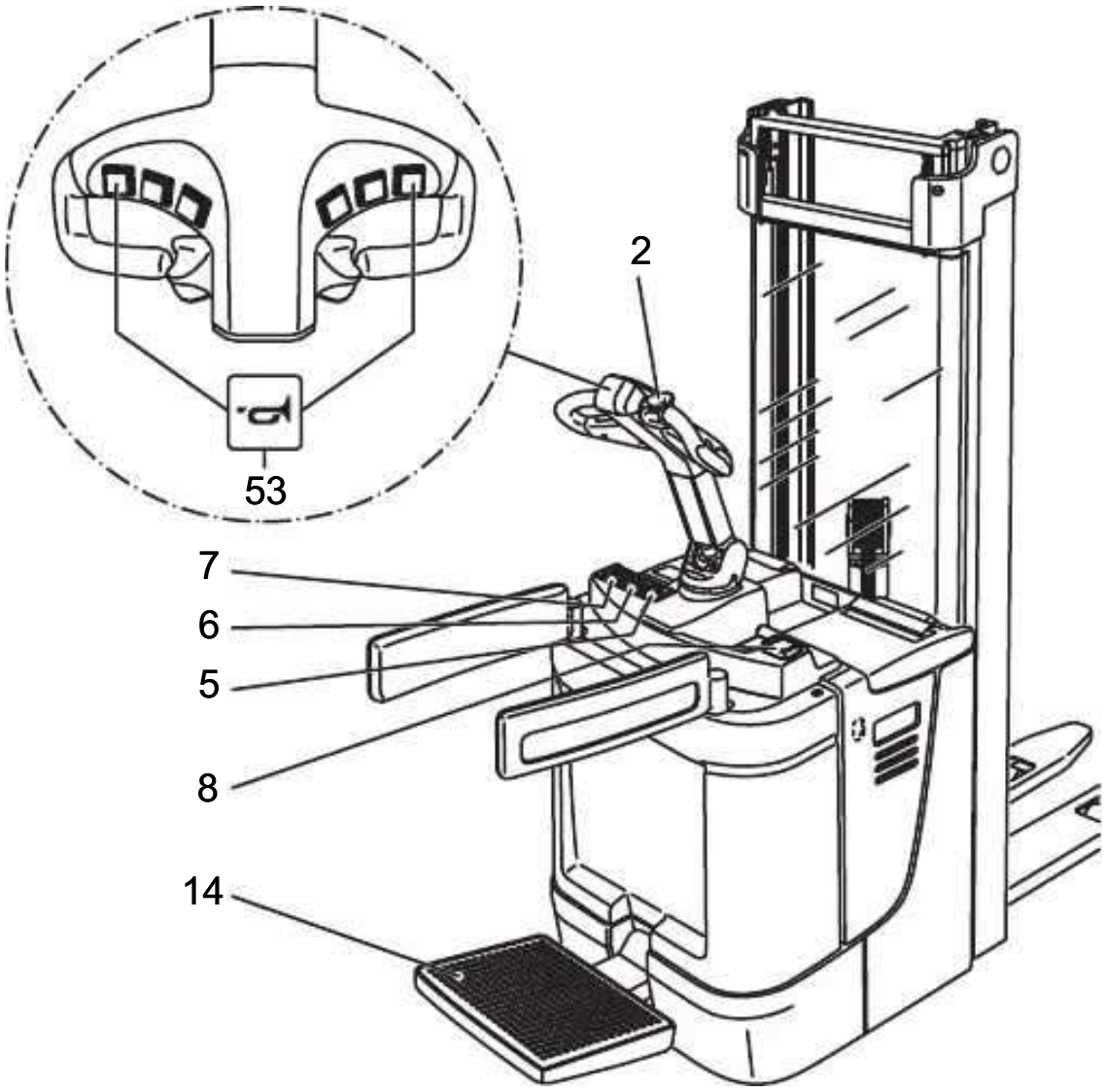

https://www.besttruckmanuals.com/

3.3 Parking the truck securely

WARNING!

An unsecured truck can cause accidents

Parking the truck on an incline, without the brakes applied or with a raised load / load handler is dangerous and is strictly prohibited.

▶ Always park the truck on a level surface. In special cases the truck may need to be secured with wedges.

▶ Always fully lower the mast and forks.

▶ Select a place to park where no other people are at risk of injury from lowering forks.

Parking the truck securely

Procedure

- Fully lower the load handler.
- Set the drive wheel to “Straight ahead”.
  Set the control handle to the "forward position".
- Switch off the truck (5) and remove the key.
- For CanCode (7) press the O key.
- Press the Emergency Disconnect (8).
- Fold in the side arms (9).

The truck is parked.

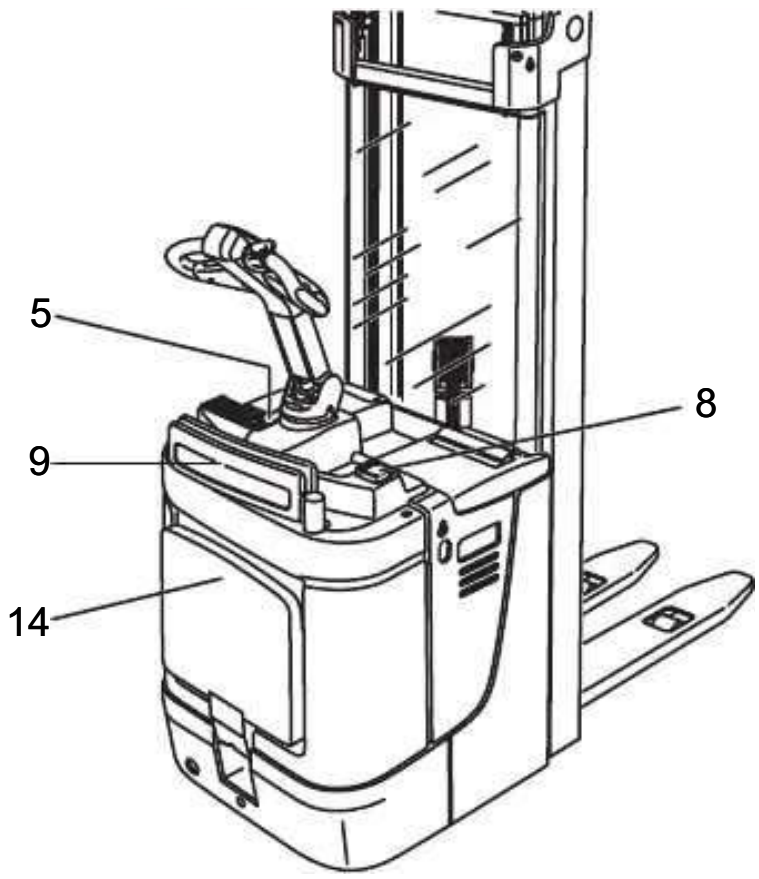

3.4 Battery discharge monitor

The standard setting for the battery discharge indicator / discharge monitor is based on standard batteries. When using maintenance-free or special batteries the

https://www.besttruckmanuals.com/

display and cutout points of the battery discharge monitor must be set by authorised specialist personnel. If this adjustment is not made the battery may become damaged through excessive depletion.

If the residual capacity falls below the required level, lifting is inhibited. An alternating display (61) appears. Lifting is only released when the battery connected is at least 70% charged.

https://www.besttruckmanuals.com/

4 Industrial Truck Operation

4.1 Safety regulations for truck operation

Travel routes and work areas

Only use lanes and routes specifically designated for truck traffic. Unauthorised third parties must stay away from work areas. Loads must only be stored in places specially designated for this purpose.
The truck must only be operated in work areas with sufficient lighting to avoid danger to personnel and materials. Additional equipment is necessary to operate the truck in areas of insufficient lighting.

⚠ DANGER!

Do not exceed the permissible surface and spot load limits on the travel routes.
At blind spots get a second person to assist.
The driver must ensure that the loading dock / ramp cannot move or come loose during loading / unloading.

Travel conduct

The driver must adapt the travel speed to local conditions. The truck must be driven at slow speed when negotiating bends or narrow passageways, when passing through swing doors and at blind spots. The driver must always observe an adequate braking distance between the forklift truck and the vehicle in front and must be in control of the truck at all times. Abrupt stopping (except in emergencies), rapid U turns and overtaking at dangerous or blind spots are not permitted. Do not lean out or reach beyond the working and operating area.

Travel visibility

The driver must look in the direction of travel and must always have a clear view of the route ahead. Loads that affect visibility must be positioned at the rear of the truck. If this is not possible, a second person must walk alongside the truck as a lookout to observe the travel route while maintaining eye contact with the driver. Proceed only at walking pace and with particular care. Stop the truck as soon as you lose eye contact.

Negotiating slopes and inclines

Negotiating slopes or inclines is only permitted if they are specifically designed as travel routes, are clean and have a non-slip surface and providing they can be safely travelled along in accordance with the truck's technical specifications. The truck must always be driven with the load unit facing uphill. The industrial truck must not be turned, operated at an angle or parked on inclines or slopes. Inclines must only be negotiated at slow speed, with the driver ready to brake at any moment.

https://www.besttruckmanuals.com/

Negotiating lifts and docks

Lifts may only be entered if they have sufficient capacity, are suitable for driving on and authorised for truck traffic by the owner. The driver must satisfy himself of the above before entering these areas. The truck must enter lifts with the load in front and must take up a position which does not allow it to come into contact with the walls of the lift shaft. People travelling in the lift with the forklift truck must only enter the lift after the truck has come to a halt and must exit the lift before the truck. The driver must ensure that the loading ramp / bridge cannot move or come loose during loading / unloading.

Type of loads to be carried

The operator must make sure that the load is in a satisfactory condition. Loads must always be positioned safely and carefully. Use suitable precautions to prevent parts of the load from tipping or falling down.

https://www.besttruckmanuals.com/

4.2 Emergency Disconnect, Travel, Steering, Braking

4.2.1 Emergency Disconnect

Applying the Emergency Disconnect

Procedure

CAUTION!

Accident risk

The operation of the Emergency Disconnect switch must not be affected by any objects placed in its way.

Do not use the Emergency Disconnect (8) as a service brake.

- Press the Emergency Disconnect (8).

All electrical functions are deactivated. The truck brakes to a halt.

Release the Emergency Disconnect

Procedure

- Pull the Emergency Disconnect (8) to unlock it.

All electrical functions are enabled and the truck is operational again (assuming the truck was not operational before the Emergency Disconnect was pressed).
For CanCode and ISM the truck remains switched off.

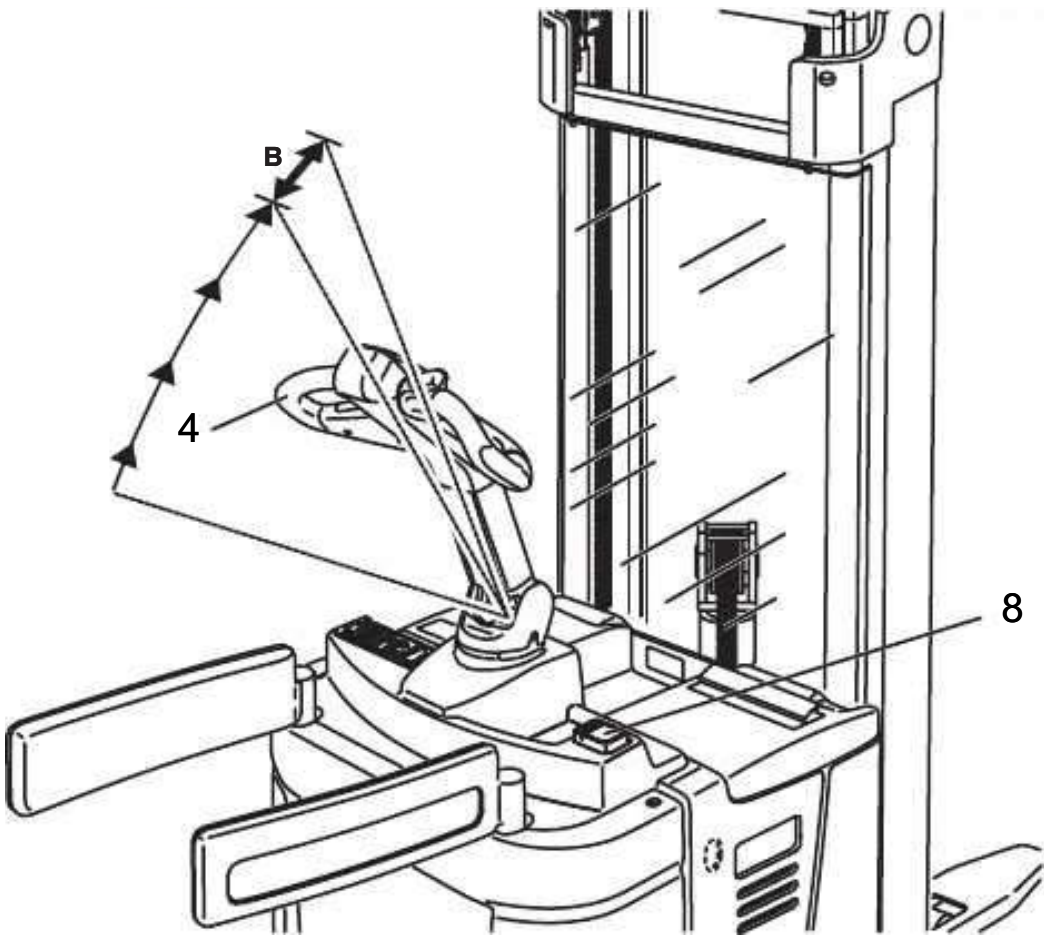

https://www.besttruckmanuals.com/

4.2.2 Travel

CAUTION!

▶Do not drive the truck unless the panels are closed and properly locked.

▶When travelling through swing doors etc. make sure that the doors do not activate the collision safety button.

WARNING!

Trapping hazard

Be extremely careful when driving and steering, especially if parts of your body extend outside the border of the truck.

▶Do not reach between the standing platform and the truck frame when you fold up the platform.

▶In pedestrian mode make sure you have sufficient distance from the industrial truck.

Industrial trucks with a folding standing platform and moving tiller

We distinguish between two travel modes:

– Travel in pedestrian mode
– Travel in rider mode

Travelling in pedestrian mode

Requirements

– Start up the truck, (see "Starting up the truck" on page 52)

Procedure

- Move both folding side arms (9) in.

➔ Both side arms must always be folded in or out; otherwise all functions are deactivated (E-1926).

- Fold up the operator platform (14).
- Set the tiller (4) to the travel zone (F).

➔ • Set the travel switch (2) to the desired travel direction: forward (V) or reverse (R). When the travel switch is release it automatically returns to its original position.

- Control the travel speed with the travel switch (2).

The brakes are released and the truck moves in the selected direction.

➔ In pedestrian mode the truck can now operate again at normal speed.

Travelling in rider mode

Requirements

– Start up the truck, (see "Starting up the truck" on page 52)

Procedure

- Move the folding side arms (9) out.
- Fold down the operator platform (14).
- Set the tiller (4) to the travel zone (F).

https://www.besttruckmanuals.com/

- Set the travel switch (2) to the desired travel direction: forward (V) or reverse (R). When the travel switch is release it automatically returns to its original position.
- Control the travel speed with the travel switch (2).

The brakes are released and the truck moves in the selected direction.

Preventing the truck from “rolling downhill”:

If the truck rolls backwards on an incline the controller detects the situation and the travel switch brake applies automatically after a short jerk.

Higher rider mode speed

Requirements

– Start up the truck, (see "Starting up the truck" on page 52)

Procedure

- Fold down the operator platform (14).
- Move the folding side restraints (9) out.
- Set the tiller (4) to the travel zone (F).
- Set the travel switch (2) to the desired travel direction: forward (V) or reverse (R). When the travel switch is released it automatically returns to its original position.
- Control the travel speed with the travel switch (2).

The brakes are released and the truck moves in the selected direction.

Preventing the truck from “rolling downhill”:

If the truck rolls backwards on an incline the controller detects the situation and the travel switch brake applies automatically after a short jerk.

NOTE

▶ Travelling is inhibited when the operator platform is unladen and the side arms are not folded out.

▶ If the standing platform is occupied and the gates are not folded out, the industrial truck can only be operated at reduced speed.

▶ If the operator platform is occupied and only one gate is folded out, travelling is inhibited.

https://www.besttruckmanuals.com/

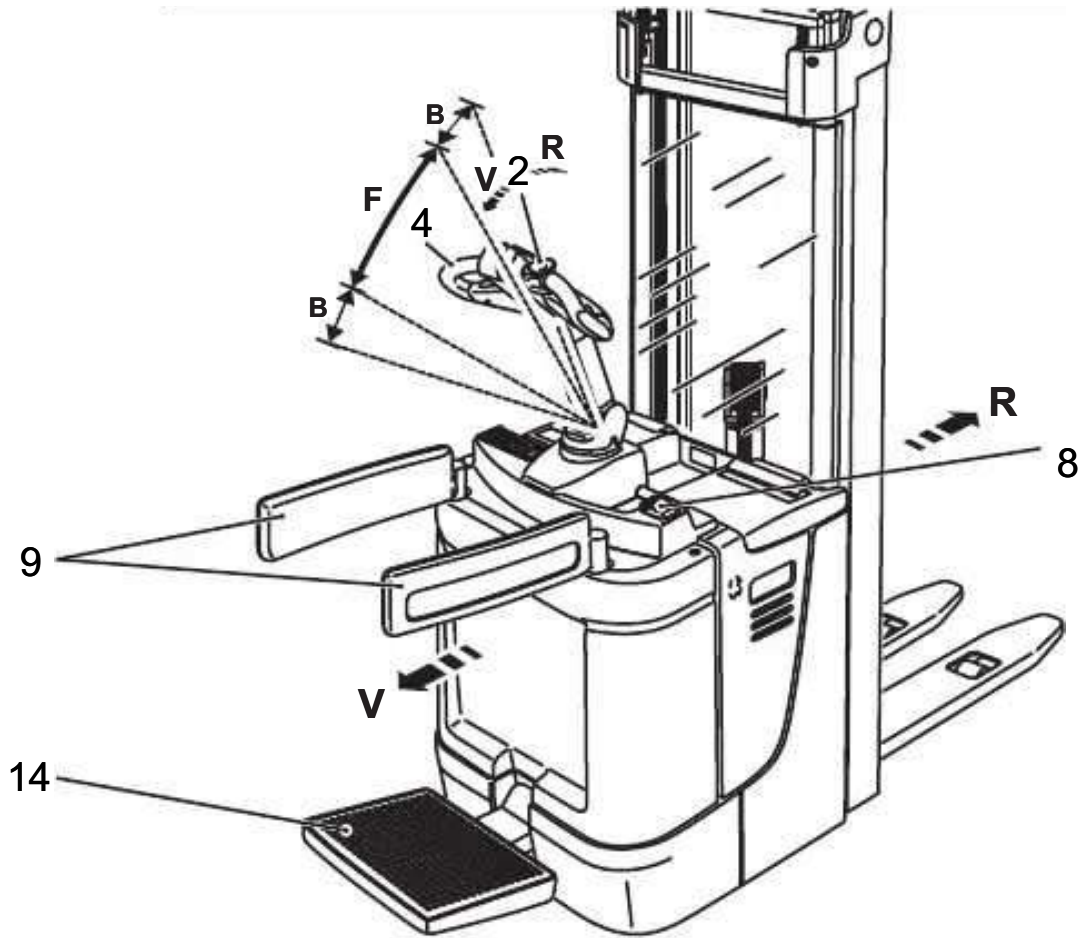

4.2.3 Steering

CAUTION!

In narrow bends the driver extends beyond the outer edge of the industrial truck.

Procedure

- Move the tiller (4) to the left or right.

The truck is steered in the required direction.

4.2.4 Brakes

The brake pattern of the truck depends largely on the travel route conditions. The driver must take this into account when travelling.
The truck can brake in different ways:

– By inversion braking (controller)
– By regenerative braking (coasting)
– With the tiller in zone "B"

CAUTION!

▶Only with Emergency Disconnect (magnetic brake) in emergencies

Braking with the Emergency Disconnect switch

Procedure

- Press the Emergency Disconnect switch (8) down.

https://www.besttruckmanuals.com/

The circuit is disconnected, all electrical functions are cut out and the industrial truck brakes automatically (magnetic brake).

➔ *The truck can only start again when the Emergency Disconnect switch (8) has been unlocked again by pulling it up.*

Inversion braking

Procedure

- During travel, set the travel switch (2) to the opposite direction.

The truck brakes are regenerative until it starts to move in the opposite direction.

➔ The brake force can be set by the manufacturer's service department.

Regenerative braking

Procedure

- If the travel switch is set to 0, the truck automatically uses regenerative brakes .

The truck comes to a halt regeneratively via the coasting brake. The brake then applies.

➔ With regenerative braking energy is recuperated to the battery, ensuring a longer service time.

Braking with the tiller in the "B" zone

Procedure

- Move the tiller up or down to one of the brake zones (B).

➔ Initially the truck brakes regeneratively. The mechanical brake is only applied when this brake fails to achieve the necessary braking force.

The truck will decelerate at the maximum rate and the brake will apply.

https://www.besttruckmanuals.com/

4.3 Lifting, transporting and depositing loads

WARNING!

Unsecured and incorrectly positioned loads can cause accidents

Before lifting a load unit the driver must make sure that it has been correctly palletised and does not exceed the truck's capacity.

▶ Instruct other people to move out of the hazardous area of the truck. Stop working with the truck if people do not leave the hazardous area.

▶ Only carry loads that have been correctly secured and positioned. Use suitable precautions to prevent parts of the load from tipping or falling down.

▶ Damaged loads must not be transported.

▶ Never exceed the maximum loads specified in the capacity chart.

▶ Never stand underneath a raised load handler.

▶ Do not stand on the load handler.

▶ Do not lift other people on the load handler.

▶ Insert the forks as far as possible underneath the load.

NOTE

The operator platform (14) must be occupied by the operator for lifting/lowering to be enabled.

NOTE

On the duplex (ZZ) and triplex (DZ) masts, travel is automatically reduced from a truck-specific lift height. It increases again when the load is lowered.

NOTE

Adapt a slower speed when stacking and retrieving.

4.3.1 Lifting and lowering

Lift a load unit

Requirements

– Load unit correctly palletised.
– Load unit weight matches the truck's capacity.
– Forks evenly loaded for heavy loads.

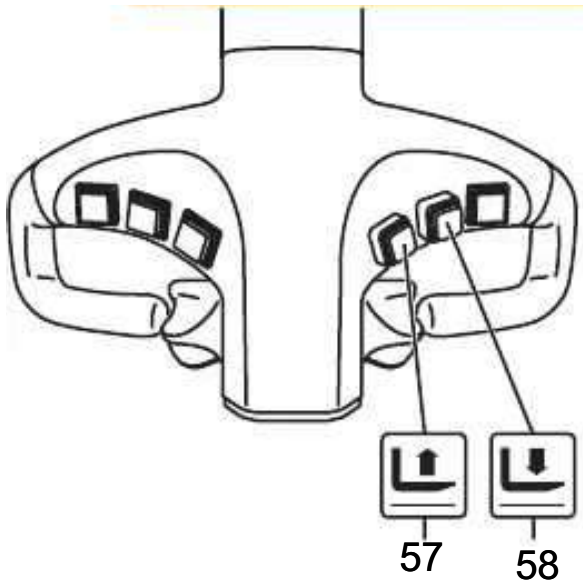

Procedure

- Drive the truck carefully up to the pallet.
- Slowly insert the forks into the pallet until the fork shank touches the pallet.

➔ The load unit must not extend by more than 50 mm beyond the fork tips.

- Press the "Raise load handler" button (57) until you reach the desired lift height.

https://www.besttruckmanuals.com/

The load unit is raised.

The lift/lower speed can be infinitely controlled via the movement of the button (approx. 8 mm).

Short stroke = slow lift / lower

Long stroke = fast lift / lower

CAUTION!

▶Release the button as soon as you reach the load handler limit position.

Depositing load units

Requirements

– Storage location suitable for storing the load.

Procedure

- Set the mast vertical.
- Drive carefully up to the storage location.
- Press the "Lower load handler" button (58) until the forks are clear of the load. Avoid depositing the load to prevent damage to the load and the load handler.
- Lower the load handler.
- Carefully remove the forks from the pallet.

The load unit is lowered.

Lifting the wheel arms

Procedure

- Press the “Wheel arm lift” button (56) .

The wheel arms raise.

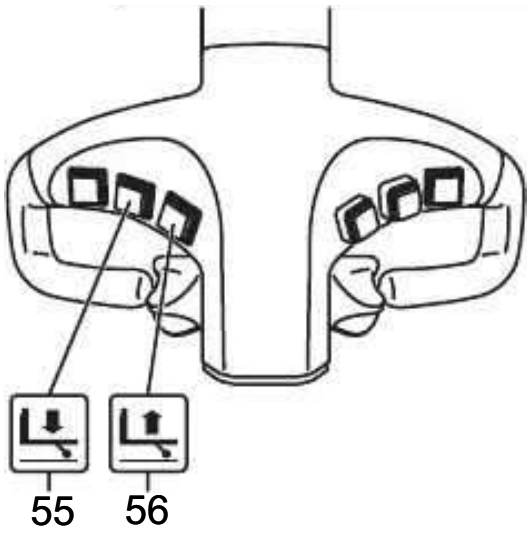

Lowering the wheel arms

Procedure

- Press the “wheel arm lower” button (55) .

The wheel arms lower.

NOTE

Avoid dropping the load abruptly, in order to protect the load and the rack surface.

https://www.besttruckmanuals.com/

Transporting load units

Requirements

– Load unit positioned correctly on the forks.
– Load handler lowered for transport (max. 500 mm above the ground).
– Mast tilted back fully.

Procedure

- Accelerate and decelerate gradually.
- Adapt your travel speed to the conditions of the route and the load you are transporting.
- Watch out for other traffic at crossings and passageways.
- Always travel with a lookout at blind spots.
- On slopes and inclines always carry the load facing uphill, never approach at an angle or turn.

https://www.besttruckmanuals.com/

4.4 Switch Matrix / Safety Switch Height

ERC without side restraint mechanism

Operator platform	Lift height	Speed km/h with load	Collision safety switch active	Lifting Active
Folded up	<Sh*)	4,2	Yes	Yes
Folded up	>Sh*)	2,5	Yes	Yes
Folded out	<Sh*)	6,0	No	Yes
Folded out	>Sh*)	2,5	No	Yes

ERC with side restraint mechanism

Operator platform	Side restraint	Lift height	Speed km/h with load	Collision safety switch active	Lifting active
Folded up	Folded in	<Sh*)	4,2	Yes	Yes
Folded up	Folded in	>Sh*)	2,5	Yes	Yes
Folded up	Folded out	Any	0	No	No
Folded out	Folded in	<Sh*)	6,0	No	Yes
Folded out	Folded in	>Sh*)	2,5	No	Yes
Folded out	Folded out	<Sh*)	See options table below		
Folded out	Folded out	>Sh*)	0	No	No

*) Sh = Safety switch height approx. 1800 mm (depending on mast version)

**) optionally, travel (4.3 km/h) and lifting above 1800 mm with side restraints folded out is available in conjunction with a load backrest.

https://www.besttruckmanuals.com/

5 Troubleshooting

This chapter enables the user to identify and rectify basic faults and the effects of incorrect operation. When trying to locate a fault, proceed in the order shown in the table.

➔ If, after carrying out the following remedial action, the truck cannot be restored to operation or if a fault in the electronics system is displayed with a corresponding error code, contact the manufacturer’s service department.
Additional troubleshooting must only be performed by the manufacturer’s specialist service engineers. The manufacturer's customer service department is specially trained to carry out these operations.
In order for customer services to react quickly and specifically to the fault, the following information is essential:
- Truck serial number
- Error number on the display unit (if applicable)
- Error description
- Current location of truck

5.1 Truck does not start

Possible Cause	Action
Battery connector not plugged in	Check the battery connector and plug it in if necessary.
Emergency Disconnect pressed.	Unlock the Emergency Disconnect
Key switch set to O.	Set the key switch to “I”
Battery charge too low	Check the battery charge and charge battery if necessary.
Faulty fuse	Check fuses

5.2 Load cannot be lifted

Possible Cause	Action
Truck not operational	Carry out all measures listed under “Truck does not start”
Hydraulic oil level too low	Check the hydraulic oil level
Battery discharge monitor has switched off	Charge the battery
Faulty fuse	Check fuses
Excessive load	Note maximum capacity, see data plate

https://www.besttruckmanuals.com/

6 Operating the truck without its own drive system

WARNING!

Uncontrolled truck movement

When the brakes are de-activated the truck must be parked on a level surface, since the brakes are no longer effective.

▶Do not release the brake on slopes or inclines.

▶Apply the brake again when you reach your destination.

▶Do not park the truck with the brake released.

Releasing the brake

Tools and Material Required

– Two M5x45 screws
– Spanner wrench

Procedure

- Turn of the key switch, CanCode (○).
- Switch off the Emergency Disconnect button.
- Disconnect the battery.
- Prevent the truck from rolling away.
- Lift up the front cover (78) and put it to one side, (see "Removing the front panel" on page 96).
- Tighten the two M5x45 screws (62).

The brake is now released and the truck can be moved.

Applying the brake

Procedure

- Unscrew the two M5x45 screws again.
- Refit the front panel.

Braking is now restored again.

https://www.besttruckmanuals.com/

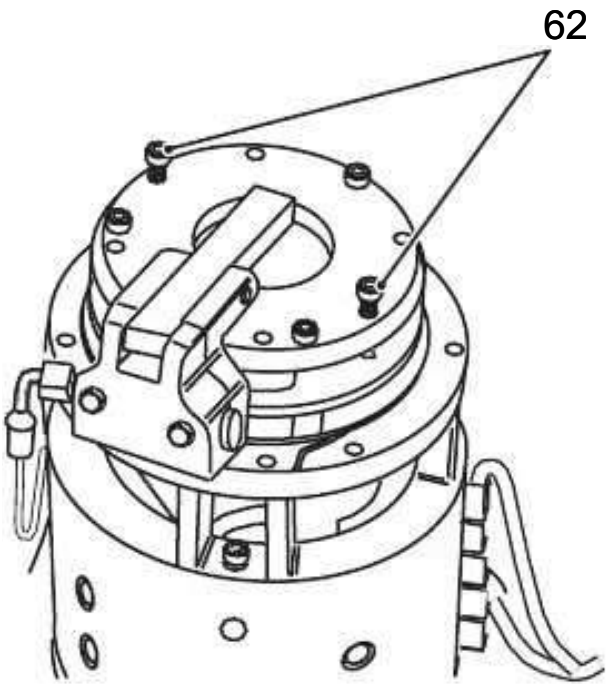
62

7 Load handler emergency lowering

Load handler emergency lowering

Requirements

– Load handler is not in the rack.

Tools and Material Required

– Allen key 5 mm (ERC 212 / Z12)
– Fork wrench SW 6 (ERC 214 / Z14, ERC 216 / Z16)

Procedure

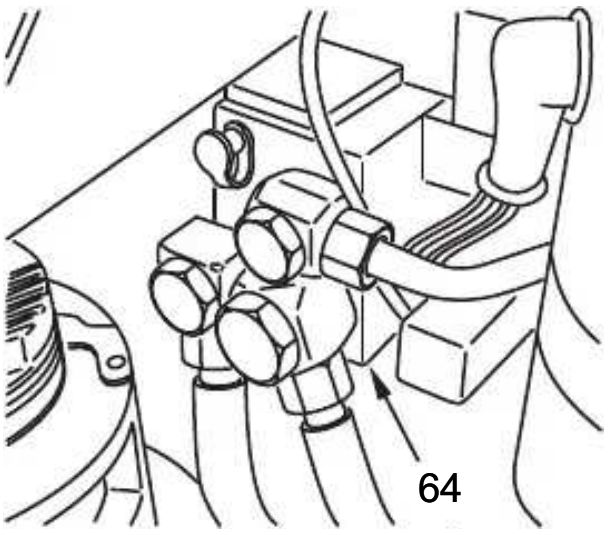

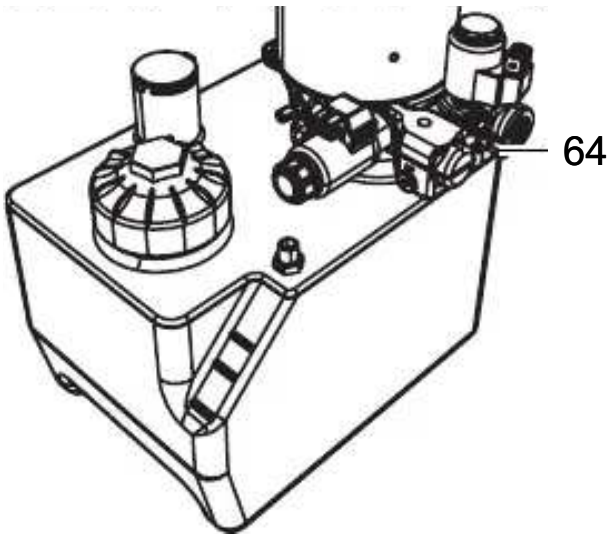

- Set key switch (5) to “0”.
- Depress the Emergency Disconnect (8), (see "Emergency Disconnect" on page 59).
- Lift off the front panel, (see "Removing the front panel" on page 96)
- Undo the screw on the valve block (64).

The load handler is lowered.

➔ *After carrying out the emergency lowering, turn in the screw on the valve block (64) as far as the stop.*

https://www.besttruckmanuals.com/

8 Optional equipment

8.1 CanCode keypad

CanCode keypad

The keypad consists of 10 digit keys, a Set key and a ○ key.

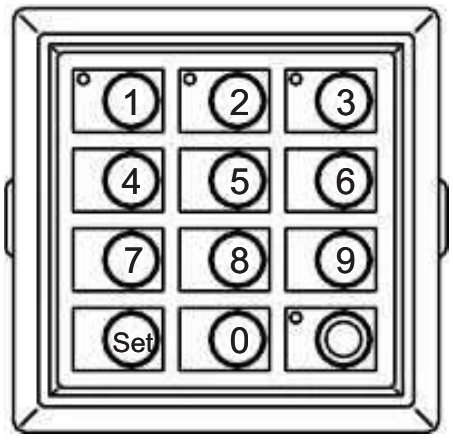

The O key indicates the follow operating statuses via a red / green LED:

– Code lock function (starting up the truck).
– Adjusting the travel program depending on the setting and truck.
– Setting and changing parameters.

8.1.1 Code lock

When the correct code is entered, the truck is ready for use. You can allocate an individual code to each truck, operator or group of operators. When the truck is supplied from the factory, the code is indicated on a sticker. Change the master and operator codes when you use the truck for the first time.

➔ Set different codes for rider and pedestrian trucks.

Starting the Truck

Procedure

- Switching on the Emergency Disconnect.
  LED (70) lights up red.
- Enter the code.
  When you enter the correct operator code the LED (70) turns green. If the LED (70) flashes red this means the wrong code has been entered. Try again.

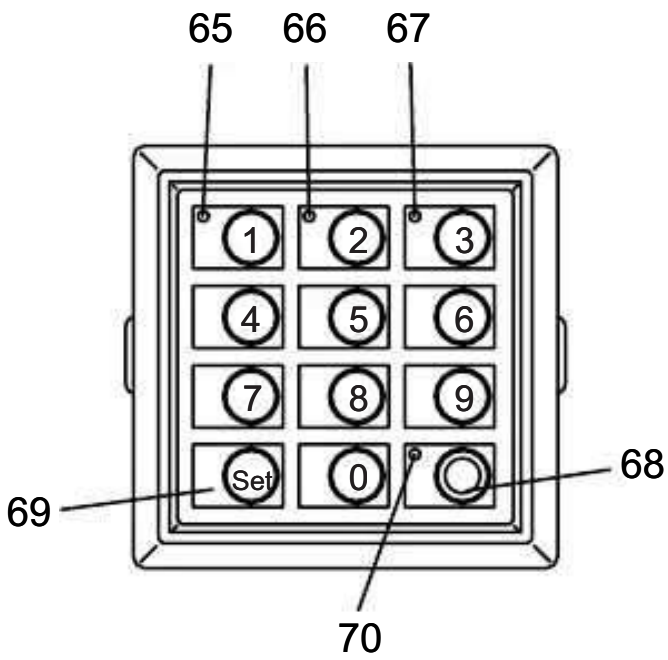

The truck is switched on

➔ The Set key (69) has no function in operating mode.

Switching the truck off

Procedure

- Press the O key.

The truck is switched off.

➔ The truck can switch off automatically after a set time. To do this the relevant code lock parameters must be entered, (see "Parameter Settings" on page 73).

https://www.besttruckmanuals.com/

8.1.2 Parameters

The keypad enables parameters to be adjusted in programming mode.

Parameter Groups

The parameter number is composed of three digits. The first digit refers to the parameter group as shown in Table 1. The second and third digits are numbered in sequence from 00 to 99.

No.	Parameter Groups
0XX	Code lock settings (codes, travel program release, automatic cut-out, etc.)

8.1.3 Parameter Settings

To change the truck settings you must enter the master code.

➔ The master code factory setting is 7-2-9-5. Change the master code the first time you use the truck.

➔ Set different codes for rider and pedestrian trucks.

Changing the truck settings

Procedure

- Press the O key (68).
- Enter the master code.
- Enter the three-digit parameter number.
- Confirm with the SET key (69).
- Enter the setting as per parameter list.

  ➔ If the entry is incorrect, the LED (70) of the O key (68) turns red.
  - Enter the parameter number again.
  - Enter the setting again or change it.
- Confirm with the SET key (69).
- Repeat the procedure for other parameters.
- Then press the O key (68).

The settings are now saved.

https://www.besttruckmanuals.com/

Parameter list

No.	Function	Setting range	Standard setting	Procedure
000	Change master code: The length (4-6 digits) of the master code also determines the length of the operator code (4-6 digits). Provided the operator codes are programmed, only new codes of the same length can be entered. If you wish to change the code length, you must first delete all the operator codes.	0000 - 9999 or 00000 - 99999 or 000000 - 999999	7295	– (LED 65 flashes) Enter current code – Confirm (Set 69) – (LED 66 flashes) Enter new code – Confirm (Set 69) – (LED 67 flashes) Repeat new code – Confirm (Set 69)
001	Add code (max. 250)	0000 - 9999 or 00000 - 99999 or 000000 - 999999	2580	– (LED 66 flashes) Enter a code – Confirm (Set 69) – (LED 67 flashes) Confirm code re-entry – Confirm (Set 69)
002	Delete code	0000 - 9999 or 00000 - 99999 or 000000 - 999999		– (LED 65 flashes) Enter current code – Confirm (Set 69) – (LED 66 flashes) Enter new code – Confirm (Set 69) – (LED 67 flashes) Confirm code re-entry – Confirm (Set 69)
003	Delete code	0000 - 9999 or 00000 - 99999 or 000000 - 999999		– (LED 66 flashes) Enter new code – Confirm (Set 69) – (LED 67 flashes) repeat code entry – Confirm (Set 69)
LEDs 65-67 are located in keypads 1-3.				

https://www.besttruckmanuals.com/

No.	Function	Setting range	Standard setting	Procedure
004	Delete code log (deletes all codes)	3265		– 3265 = delete – other inputs = do not delete
010	Automatic timeout	00-31	00	– 00 = No timeout – 01 - 30 = Timeout in minutes – 31 = Timeout after 10 seconds
LEDs 65-67 are located in keypads 1-3.				

Assigning the starting travel program (depending on the truck)

The travel programs are connected to the code. The travel programs can be individually released or blocked for each code. A starting travel program can be assigned to each code.

When a user code has been set up, all travel programs are globally released and the valid starting travel program is 2.
The user code configuration can then be altered via program number 024.

No.	Function	Setting range	Standard setting	Procedure
024	Code configuration		1112	

1. digit: travel program 1 release (0 = blocked, or 1 = released)
2. digit: travel program 2 release (0 = blocked, or 1 = released)
3. digit: travel program 3 release (0 = blocked, or 1 = released)
4. digit: Start travel program (0, 1, 2 or 3)

https://www.besttruckmanuals.com/

Setting the travel program configuration to a code

Procedure

- Press the O key (68).
- Enter the master code.
- Enter the three-digit parameter number 024.
- Confirm with the SET key (69).
- Enter the code to be changed and confirm with SET.
- Enter the configuration (4 digit) and confirm with SET.
- Enter the configuration (4 digit) again and confirm with SET.
- Repeat the procedure for other codes.
- Then press the O key.

The travel programs are assigned to the codes

Keypad error messages

LED (70) flashes red to indicate the following errors:

– New master code is already in use.
– New code is already the master code
– Code to be changed does not exist
– Attempt to change the code to one that already exists.
– Attempt to delete a code that does not exist
– Code memory full.

https://www.besttruckmanuals.com/

8.1.4 Setting the truck parameters with CanCode

CAUTION!

Faulty entry

Without CanDis only CanCode internal parameters can be changed. Traction controller parameters can only be changed with CanDis, without CanDis the settings must be performed by the manufacturer's service department.

CAUTION!

Altering travel parameters can cause accidents

Increasing the settings for acceleration, steering, travel, lifting and lowering can result in accidents.

▶Carry out a test run in a secure environment.

▶This requires greater attention on the part of the operator.

Parameter setting example:

The following example shows the parameter setting for the acceleration of travel program 1 (parameter 0256).

Acceleration example

Procedure

- Enter four-digit parameter number "0256" and confirm with the SET key (69).
- Enter sub-index (enter "2") and confirm with the SET key (69).

➔ The parameter and sub index are displayed alternately with the current reading (0256-2<->0000-3).

- Enter the parameter according to the parameter list and confirm with the Set key (69).

➔ The LED (70) of the O key (68) switches briefly to steady light and start flashing again after approx. 2 seconds.

➔ If the entry is incorrect, the LED (70) of the O key (68) turns red. Enter the parameter number again to repeat the setting.

➔ The parameter and sub index are displayed alternately with the current reading (0256-2<->0000-5).

The travel parameter is now set.

Repeat the procedure to enter further parameters as soon as the LED (70) of the O key (68) flashes.

➔ Travel is disabled while the parameters are being entered.

Checking the settings in programming mode

Procedure

- Select the travel program to be worked on after changing the parameter value, and confirm with the Set key (69).

The truck is now in travel mode and can be checked.

https://www.besttruckmanuals.com/

➔ To continue setting, confirm with the Set key (69) again.

Saving travel parameters

Requirements

– Enter all parameters.

Procedure

- Run "SaveParameters" by pressing 1-2-3-Set.
- Confirm with the O key (68).

8.2 Parameter

Travel program 1

No.	Function	Setting range	Standard setting	Comments
101	Acceleration	0 - 9	6	
102	Coasting brake with release	0 - 9	6	
104	Max. speed in drive direction	0 - 9	6	
105	Pedestrian travel switch speed in drive direction	0 - 9	6	
108	Max. speed in forks direction	0 - 9	6	
109	Pedestrian travel switch speed in forks direction	0 - 9	6	

https://www.besttruckmanuals.com/

Battery parameters

No.	Function	Setting range	Standard setting	Comments
411	Battery type (normal / high performance / dry)	0 - 2	0	0 = Normal (wet) 1 = High performance (wet) 2 = Dry (maintenance-free)

⚠ **CAUTION!**

Battery type parameters
The battery and charger used must match the battery parameters

https://www.besttruckmanuals.com/

8.3 CANDIS display instrument

The instrument indicates:

71	Battery charge display (on board charger only)
72	Capacity display bars Battery residual charge status
73	Warning - pre-warning symbol, Battery charge recommended
74	Stop symbol; lift cutout, Battery charge required
75	T symbol appears during operation when the discharge indicator is set to maintenance-free battery
76	6 digit LCD display; hourmeter, input display; error display

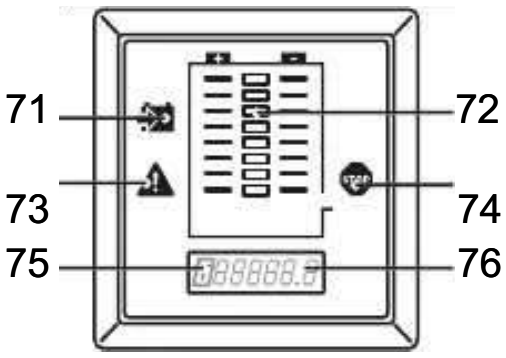

In addition, service messages for the electronic components and parameter changes are displayed.

Discharge status display

Setting limits for the additional “Warning” (73) and “Stop” (74) displays will depend on the battery type.

The available capacity is shown via 8 LED bars.

The current battery capacity is shown by the illuminated LED bars. 8 bars correspond to full battery capacity, 1 bar corresponds to the minimum available capacity.

If only one LED bar is lit, the battery capacity is almost depleted and the “Warning” indicator (73) is lit. The battery must be charged immediately.

If no more LED bars are illuminated, the “Stop” indicator (74) lights up. Lifting is now inhibited. The battery must be charged.

8.3.1 Discharge monitor function

When the discharge monitor function is enabled, lifting is cut out when reaching the discharge limit is reached (the Stop LED goes on). Travel and lowering are still possible.

https://www.besttruckmanuals.com/

8.3.2 Service hour display

Display range between 0.0 and 99,999.0 hours. Travel and lifting operations are logged. This is a backlit display.

➔ For maintenance-free batteries a “T” symbol is shown in the hourmeter display (75).

8.3.3 Error messages

The service hour display is also used for indicating errors. The display starts with a "C" for component and a three digit component number. The error display starts with an ”E” for Error and a three digit error number.
If several errors occur simultaneously they are displayed one after the other. The errors are displayed until they are rectified. Error messages overwrite the service hour display. Most errors cause the Emergency Stop to be triggered. The error display remains until the control circuit is switched off (key switch).

➔ The manufacturer’s service department has detailed component descriptions with error codes.

8.3.4 Power up test

On power up the display shows:

– The software version of the display instrument (briefly),
– The service hours,
– The battery charge status.

https://www.besttruckmanuals.com/

https://www.besttruckmanuals.com/

F Industrial Truck Maintenance

1 Operational Safety and Environmental Protection

The checks and servicing operations contained in this chapter must be performed in accordance with the intervals as indicated in the servicing checklists.

WARNING!

Risk of accidents and damage to components

All modifications to the forklift truck assemblies, in particular the safety mechanisms, are prohibited. The operating speeds of the truck must not be increased under any circumstances.

NOTE

Only original spare parts have been certified by our quality assurance department. To ensure safe and reliable operation of the truck, use only the manufacturer's spare parts.

For safety reasons, only components which have been specially agreed by the manufacturer for this truck may be installed near the computer, controllers and wire guidance sensors (antennae). These components (computers, controllers, wire guidance sensors (antennae)) must therefore not be replaced either by similar components from other trucks of the same series.

2 Maintenance Safety Regulations

Maintenance personnel

The truck should only be serviced and repaired by the manufacturer's specialist customer service personnel who have been trained to do this. We therefore recommend that you enter into a maintenance contract with the manufacturer’s local sales office.

https://www.besttruckmanuals.com/

Lifting and jacking up

WARNING!

Lifting and jacking up the truck safely

In order to raise the truck, the lifting gear must only be secured to the points specially provided for this purpose.

You may only work under a raised load handler / raised cab if they have been secured with a sufficiently strong chain or the fastening bolt.

In order to raise and jack up the truck safely, proceed as follows:

- ▶ Jack up the truck only on a level surface and prevent it from moving accidentally.
- ▶ Always use a jack with sufficient capacity. When jacking up the truck, take appropriate measures to prevent it from slipping or tipping over (e.g. wedges, wooden blocks).
- ▶ In order to raise the truck, the lifting gear must only be secured to the points specially provided for this purpose, (see "Transport and Commissioning" on page 27).
- ▶ When jacking up the truck, take appropriate measures to prevent it from slipping or tipping over (e.g. wedges, wooden blocks).

Cleaning

CAUTION!

Fire hazard

Do not use flammable liquids to clean the industrial truck.

- ▶ Always disconnect the battery before starting cleaning work.
- ▶ Carry out all necessary safety measures to prevent sparking before cleaning (e.g. by short-circuiting).

CAUTION!

Risk of electrical system damage

The electrical system can be damaged if it is cleaning with water. It is prohibited to clean the electrical system with water.

- ▶ Do not clean the electrical system with water.
- ▶ Clean the electrical system with weak suction or compressed air (use a compressor with a water trap) and not a conductive, anti-static brush.

CAUTION!

Risk of component damage when cleaning the truck

If the truck is to be cleaned with a water jet or a high-pressure cleaner, all electrical and electronic components must be carefully covered beforehand as moisture can cause malfunctions. Do not clean with pressurised water.

➔ After cleaning, carry out the operations detailed in "Recommissioning the truck after cleaning or maintenance work" ((see "Restoring the truck to service after maintenance and repairs" on page 101)).

https://www.besttruckmanuals.com/

Electrical system

WARNING!

Accident risk

▶Only suitably trained electricians may operate on the truck's electrical system.

▶Before working on the electrical system, take all precautionary measures to avoid electric shocks.

▶Always disconnect the battery before starting cleaning operations.

WARNING!

Electric currents can cause accidents

Make sure the electrical system is voltage-free before starting work on it. Before starting maintenance on the electrical system:

▶Park the truck securely ((see "Parking the truck securely" on page 55)).

▶Press the Emergency Disconnect.

▶ Disconnect the battery.

▶Remove any rings or metal bracelets etc. before working on electrical components.

Consumables and used parts

CAUTION!

Consumables and used parts are an environmental hazard

Used parts, oils and fuels must be disposed of in accordance with the relevant environmental protection regulations. To change the oil contact the manufacturer's customer service department, who have been specially trained for this task.

▶Note the safety regulations when handling these materials.

Welding

Remove electrical and electronic components from the truck before performing welding operations, to avoid damage.

Settings

When repairing or replacing hydraulic, electric or electronic components or assemblies, always note the truck-specific settings.

Wheels

WARNING!

The use of wheels that do not match the manufacturer's specifications can result in accidents.

The quality of wheels affects the stability and performance of the truck.

Uneven wear affects the truck's stability and increases the stopping distance.

▶When replacing wheels make sure the truck is not skewed.

▶Always replace wheels in pairs, i.e. left and right at the same time.

https://www.besttruckmanuals.com/

➔ When replacing wheels fitted at the factory, only use the manufacturer’s original spare parts. Otherwise the truck's rated performance cannot be ensured.

Hydraulic hoses

⚠ **WARNING!**

Brittle hydraulic hose lines can cause accidents

The hoses must be replaced every six years. The manufacturer's customer service department is specially trained to carry out these operations.

▶ Comply with the safety regulations for hydraulic hose lines in accordance with BGR 237.

⚠ **WARNING!**

Hydraulic line leaks can cause accidents

Hydraulic oil can escape from leaky and faulty hydraulic lines.

▶ Report any defects immediately to your supervisor.

▶ Tag out and decommission a faulty lift truck.

▶ Only return the truck to service when you have identified and rectified the fault.

▶ Spilled fluids must be removed immediately with an appropriate bonding agent. The bonding agent / consumable mixture must be disposed of in accordance with regulations.

⚠ **WARNING!**

Hairline cracks in the hydraulic lines can cause injury and infection

Pressurised hydraulic oil can penetrate the skin through fine holes or hairline cracks in the hydraulic lines, causing severe injury.

▶ Call for a doctor immediately if you are injured.

▶ Do not touch pressurised hydraulic lines.

▶ Report any defects immediately to your supervisor.

▶ Tag out and decommission a faulty lift truck.

▶ Only return the truck to service when you have identified and rectified the fault.

▶ Spilled fluids must be removed immediately with an appropriate bonding agent. The bonding agent / consumable mixture must be disposed of in accordance with regulations.

---

https://www.besttruckmanuals.com/

3 Servicing and Inspection

Thorough and expert servicing is one of the most important requirements for the safe operation of the industrial truck. Failure to perform regular servicing can lead to truck failure and poses a potential hazard to personnel and equipment.

⚠ WARNING!

The application conditions of an industrial truck have a considerable impact on the wear of the service components.
We recommend that a Jungheinrich customer service adviser carries out an application analysis on site to work out specific service intervals to prevent damage due to wear.
The service intervals stated are based on single shift operation under normal operating conditions. They must be reduced accordingly if the truck is to be used in conditions of extreme dust, temperature fluctuations or multiple shifts.

The following servicing checklist indicates the operations to be performed and the respective intervals to be observed. Maintenance intervals are defined as:

W	=	Every 50 service hours, at least weekly
A	=	Every 500 service hours
B	=	Every 1000 service hours, or at least annually
C	=	Every 2000 service hours, or at least annually
●	=	Standard maintenance interval
✳	=	Cold store maintenance interval (in addition to standard maintenance interval)

➔ W maintenance intervals must be performed by the owner.

During the run-in period – after approx. 100 service hours – the owner must check the wheel nuts / bolts and re-tighten if necessary.

https://www.besttruckmanuals.com/

4 Maintenance checklist

		Maintenance intervals			
		Standard = ●	W	A	B	C
Brakes					
1.1	Test brakes.			●	
1.2	Check magnetic brake air gap.			●	

		Maintenance intervals			
		Standard = ●	W	A	B	C
Electrical System					
2.1	Test warning and safety devices in accordance with operating instructions.			●	
2.2	Test the cables and motor attachments.	✳		●	
2.3	Test displays and controls.			●	
2.4	Test Emergency Disconnect switch.			●	
2.5	Check fuse ratings.			●	
2.6	Carry out a frame leakage test.			●	
2.7	Check the carbon brushes, replace if necessary. Note: When replacing the carbon brushes apply compressed air to the motor.			●	
2.8	Check electric wiring for damage [insulation damage, connections]. Make sure wire connections are secure.			●	

		Maintenance intervals			
		Standard = ●	W	A	B	C
Power Supply					
3.1	Check battery cable connections are secure, grease terminals if necessary.			●	
3.2	Check battery and battery components.			●	
3.3	Check acid density and battery voltage.			●	
3.4	Check battery connector for damage, test it and make sure it is secure.			●	

		Maintenance intervals			
		Standard = ●	W	A	B	C
Travel					
4.1	Checking bedding and attachment of the drive system.			●	
4.2	Check transmission for noise and leakage.			●	
4.3	Note: Replace the transmission oil after 10000 service hours.				
4.4	Check wheel suspension and attachment.			●	
4.5	Check wheels for wear and damage.			●	

https://www.besttruckmanuals.com/

		Maintenance intervals			
		Standard = ●	W	A	B	C
Chassis and Superstructure					
5.1	Check doors and/or covers.			●	
5.2	Check labels are legible and complete.			●	
5.3	Check the chassis and screw connections for damage.			●	
5.4	Check operator position mounting bolts.			●	
5.5	Test the operator platform and check for damage.			●	
5.6	Check mast attachment / mounting.			●	
5.7	Check operator mat and steps are non-slip and damage-free.			●	
5.8	Check the mast guard for damage			●	
5.9	Check the mast guard for damage			●	
5.10	Test battery panel damper operation			●	

		Maintenance intervals			
		Standard = ●	W	A	B	C
Hydraulic Operation					
6.1	Test "hydraulic" controls and make sure the labels are present, legible and complete.			●	
6.2	Test the lift sensor system in the mast and check for damage.			●	
6.3	Check cylinders and piston rods for damage and leaks, and make sure they are secure.			●	
6.4	Check settings and wear levels of slide pieces and stops and adjust the slide pieces if necessary.			●	
6.5	Check the load chain setting and tension if necessary.			●	
6.6	Check lateral clearance of the mast connections and the fork carriage.			●	
6.7	Visually inspect the mast rollers and check contact surface wear level.			●	
6.8	Test hydraulic system.			●	
6.9	Replace hydraulic oil filter, ventilation/discharge filter.			✳	●
6.10	Check that hydraulic ports, hose and pipe lines are secure, check for leaks and damage.			●	
6.11	Test emergency lowering system.				●
6.12	Check hydraulic oil level and top up if necessary.			●	
6.13	Test relief valve and adjust if necessary.			●	
6.14	Replace hydraulic oil.			✳	●
6.15	Check forks or load handler for wear and damage.			●	

https://www.besttruckmanuals.com/

		Maintenance intervals			
		Standard = ●	W	A	B	C
Agreed performance levels					
1	Carry out a test run with rated load.			●	
2	Demonstration after servicing.	✳		●	
3	Lubricate truck according to the lubrication schedule.	✳		●	

		Maintenance intervals			
		Standard = ●	W	A	B	C
Steering					
1	Check tiller recuperating function.	✳		●	
2	Test electric steering and its components.			●	

https://www.besttruckmanuals.com/

5 Lubricants and Lubrication Schedule

5.1 Handling consumables safely

Handling consumables

Consumables must always be handled correctly. Follow the manufacturer's instructions.

WARNING!

Improper handling is hazardous to health, life and the environment

Consumables can be flammable.

- ▶Keep consumables away from hot components and naked flames.
- ▶Always keep consumables in prescribed containers.
- ▶Always fill consumables in clean containers.
- ▶Do not mix up different grades of consumable. The only exception to this is when mixing is expressly stipulated in the operating instructions.

CAUTION!

Spilled liquids can cause slipping and endanger the environment

Risk of slipping from spilled liquids. The risk is greater when combined with water.

- ▶Do not spill fluids.
- ▶Spilled fluids must be removed immediately with an appropriate bonding agent.
- ▶The bonding agent / consumable mixture must be disposed of in accordance with regulations.

WARNING!

Oils (chain spray / hydraulic oil) are flammable and poisonous.

- ▶Dispose of used oils in accordance with regulations. Store used oil safely until it can be disposed of in accordance with regulations.
- ▶Do not spill oil.
- ▶Spilled fluids must be removed immediately with an appropriate bonding agent.
- ▶The bonding agent / consumable mixture must be disposed of in accordance with regulations.
- ▶Observe national regulations when handling oils.
- ▶Wear safety gloves when handling oils.
- ▶Prevent oil from coming into contact with hot motor parts.
- ▶Do not smoke when handling oil.
- ▶Avoid contact and digestion. If you swallow oil do not induce vomiting but call for a doctor immediately.
- ▶Seek fresh air after breathing in oil fumes or vapours.
- ▶If oil has come into contact with your skin, rinse your skin with water.
- ▶If oil has come into contact with your eyes, rinse them with water and call for a doctor immediately.
- ▶Replace oil-soaked clothing and shoes immediately.

https://www.besttruckmanuals.com/

Consumables and used parts

⚠ **CAUTION!**

Consumables and used parts are an environmental hazard

Used parts, oils and fuels must be disposed of in accordance with the relevant environmental protection regulations. To change the oil contact the manufacturer's customer service department, who have been specially trained for this task.

▶Note the safety regulations when handling these materials.

https://www.besttruckmanuals.com/

5.2 Lubrication Schedule

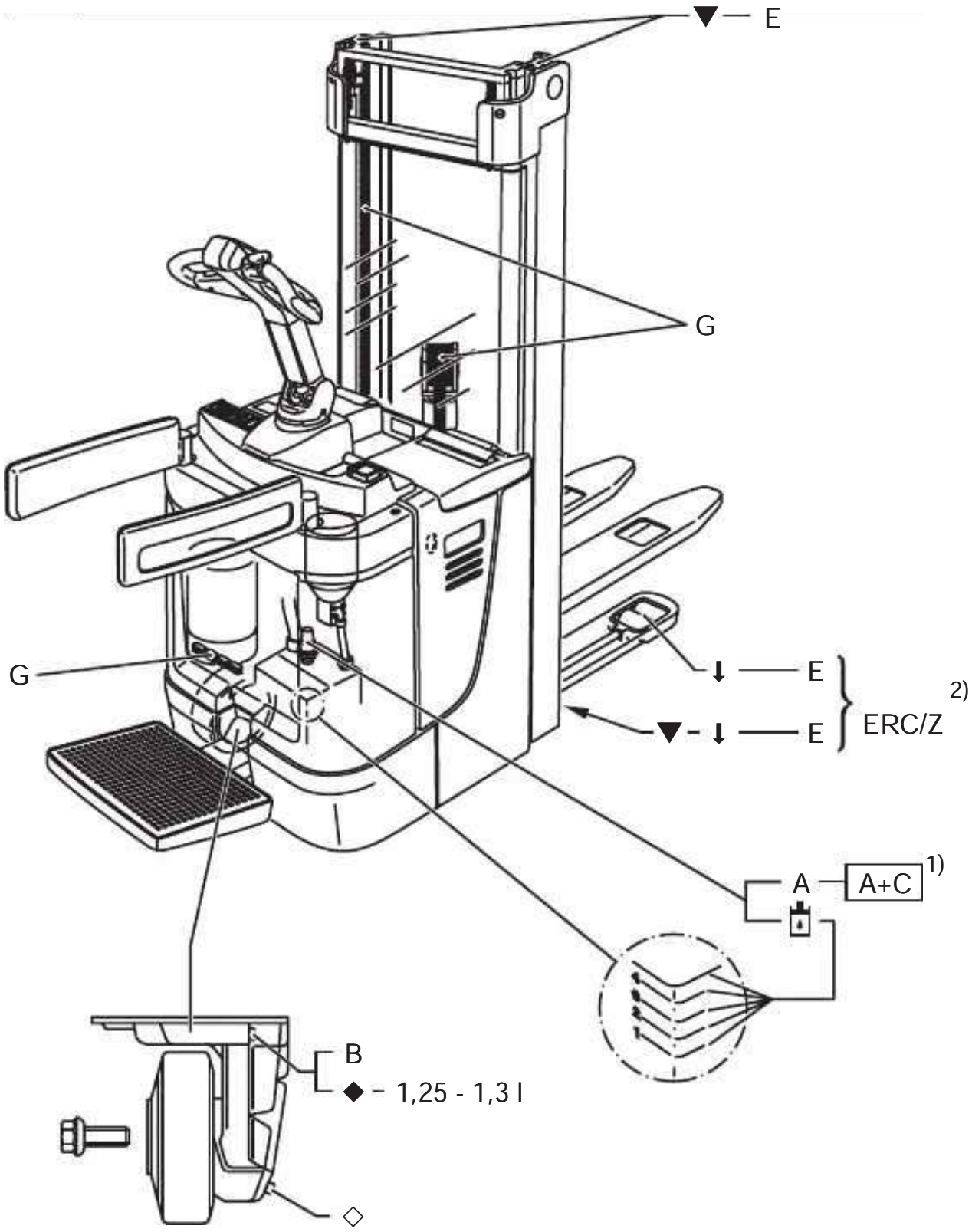

▼	Contact surfaces	□	Cold Store Application
⬇	Grease nipple	◆	Transmission oil filler neck
◇	Transmission oil drain plug	◇	Transmission oil drain plug
	Hydraulic oil filler neck		

1 Compound ratio for cold store usage 1:1

2 Gear oil values are guidelines only. The spur wheel should be dipped approx. 2mm in the oil.

https://www.besttruckmanuals.com/

5.3 Consumables

Code	Order no.	Package quantity	Name	Used for
A	51132827	5.0 l	Jungheinrich Hydraulic oil*	Hydraulic System
	51132826	1.0 l		
B	50380904	5.0 l	Titan Gear HSY 75W-90	Transmission
C	29200810	5.0 l	H-LP 10, DIN 51524	Hydraulic System
E	29202050	1.0 kg	Polylub GA 352P	Lubrication
G	29201280	0.4 l	Chain spray	Chains

Grease guidelines

Code	Saponification	Dew point °C	Worked penetration at 25 °C	NLG1 class	Application temperature °C
E	Lithium	>220	280 - 310	2	-35/+120

*The trucks are factory-equipped with a special hydraulic oil (the Jungheinrich hydraulic oil with a blue colouration) and the cold store hydraulic oil (red colouration). The Jungheinrich hydraulic oil can only be obtained from the Jungheinrich service department. The use of named alternative hydraulic oils is not prohibited but may lead to a decline in functionality. The Jungheinrich hydraulic oil may be mixed with one of the named alternative hydraulic oils.

https://www.besttruckmanuals.com/

6 Maintenance and repairs

6.1 Preparing the truck for maintenance and repairs

All necessary safety measures must be taken to avoid accidents when carrying out maintenance and repairs. The following preparations must be made:

Requirements

– Park the truck securely, (see "Parking the truck securely" on page 55).

Procedure

- Remove the battery connector (43) to prevent the truck from being switched on accidentally.
- When working under a raised lift truck, secure it to prevent it from lowering, tipping or sliding away.

WARNING!

Risk of accidents when working under the load handler, driver's cab and lift truck

▶When working under a raised load handler, driver's cab or a raised truck, secure them to prevent the truck from from lowering, tipping or sliding away.

▶When raising the truck, follow the instructions (see "Transport and Commissioning" on page 27). When working on the parking brake, prevent the truck from accidentally rolling away (e.g. with wedges).

https://www.besttruckmanuals.com/

6.2 Removing the front panel

Disassemble the front panel (trucks with folding operator platform)

Requirements
– Folding operator platform (14) folded down.
– Side arms (9) folded out.

Tools and Material Required
– Allen key (width 8)

Procedure
- Undo the screws on the front panel (77) with an Allen key (key width 8).
- Lift the front panel (78), remove it from the truck and place it securely next to the truck.

The front panel is now disassembled.

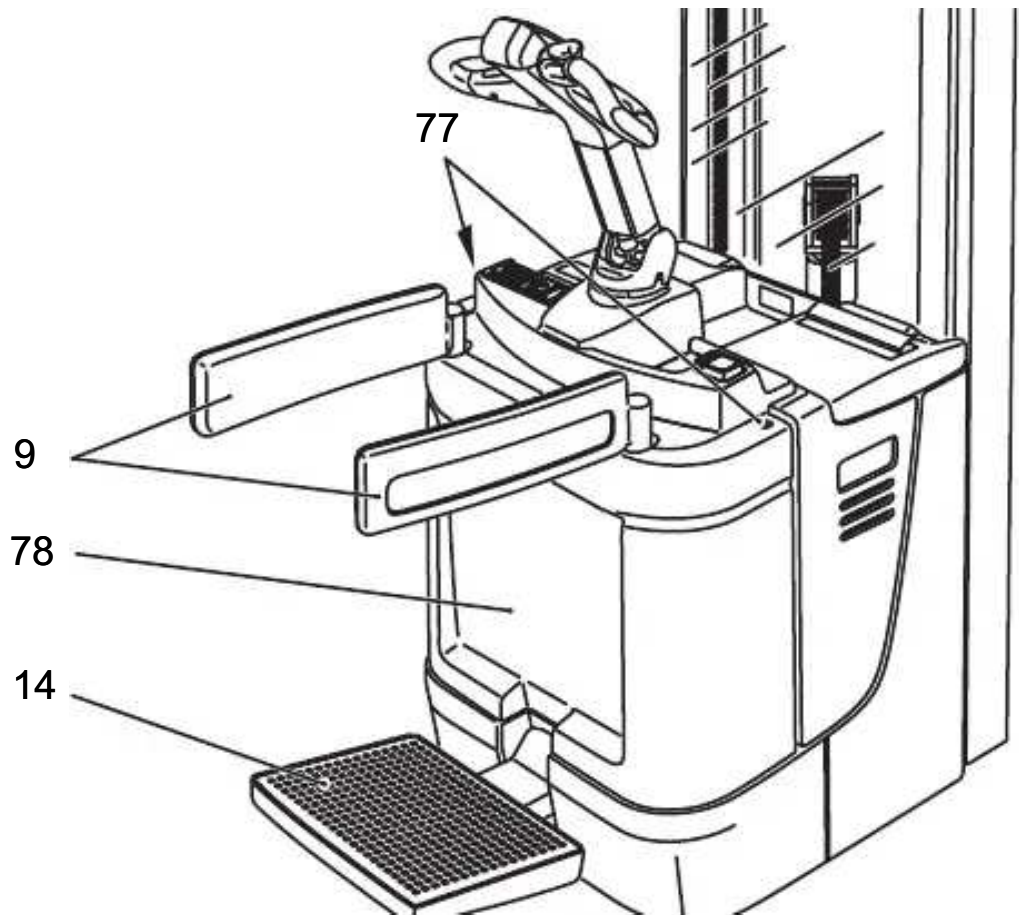

Remove the front panel (industrial truck with fixed standing platform)

Tools and Material Required
– Allen key (width 8)

Procedure
- Undo the screws on the front panel (77) with an Allen key (key width 8).
- Lift the front panel (78), remove it from the truck and place it securely next to the truck.

The front panel is now disassembled.

➔ Assembly is the reverse order.

https://www.besttruckmanuals.com/

6.3 Checking the hydraulic oil level

Check oil level

Requirements

– Lower the load handler.
– Prepare the truck for maintenance and repairs, (see "Preparing the truck for maintenance and repairs" on page 95).
– Remove the front panel, (see "Removing the front panel" on page 96).

Procedure

- Check the oil level in the hydraulic reservoir.
- If necessary add transmission oil of the correct grade, (see "Consumables" on page 94), (see also table).

The oil level is now checked.

➔ There are markings (101) on the hydraulic reservoir. The oil level must be checked when the lift mechanism is lowered.

Marking	Litres	Lift heights (h_3)		
		ZT	ZZ	DZ
3	approx. 8.3	--	>4100	>5300
2	approx. 7.5	>3100	>2800	--
1	approx. 6.5	<3100	<2800	--

https://www.besttruckmanuals.com/

6.4 Check the gear oil level

Check oil level

Requirements

– Prepare the truck for maintenance and repairs, (see "Preparing the truck for maintenance and repairs" on page 95).

Procedure

- Loosen the screws of the front panel (77).
- Remove the front panel (78) and place it in a safe location.
- Check the transmission oil level.
- If necessary add transmission oil of the correct grade, (see "Consumables" on page 94).

➔ The transmission oil level should reach the filler neck.

The oil level is now checked.

https://www.besttruckmanuals.com/

6.5 Tightening the wheel nuts

The wheel nuts on the drive wheel must be retightened in accordance with the maintenance intervals indicated in the maintenance checklist, (see "Servicing and Inspection" on page 87)

Tightening the wheel nuts

Requirements

– To prepare the truck for maintenance and repairs, (see "Preparing the truck for maintenance and repairs" on page 95)

Tools and Material Required

– Torque wrench

Procedure

- Position the drive wheel (79) so that the wheel nuts (80) can be pulled through the hole (81).
- Tighten all the wheel nuts (80) in the skirt with the socket wrench through the hole (81).
  To do this, torque the wheel nuts in the prescribed order
  - initially to 10 Nm
  - then to 150 Nm.

The wheel nuts are now tightened.

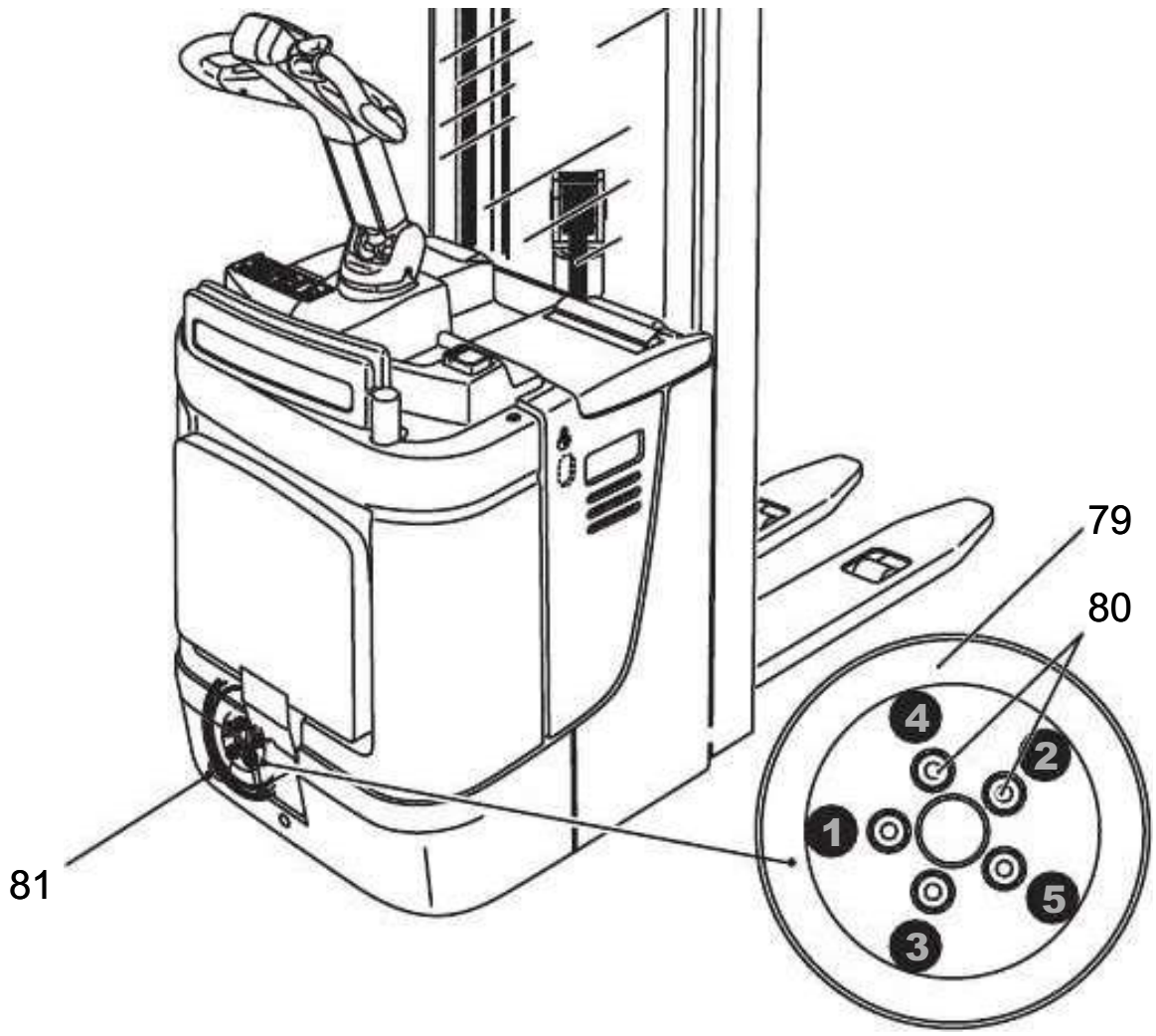

https://www.besttruckmanuals.com/

6.6 Checking electrical fuses

Checking fuses

Requirements

– Truck prepared for maintenance and repairs, (see "Preparing the truck for maintenance and repairs" on page 95).
– Front panel removed, (see "Removing the front panel" on page 96).

Procedure

• Check the fuse ratings against the table and replace if necessary.

The fuses are now checked.

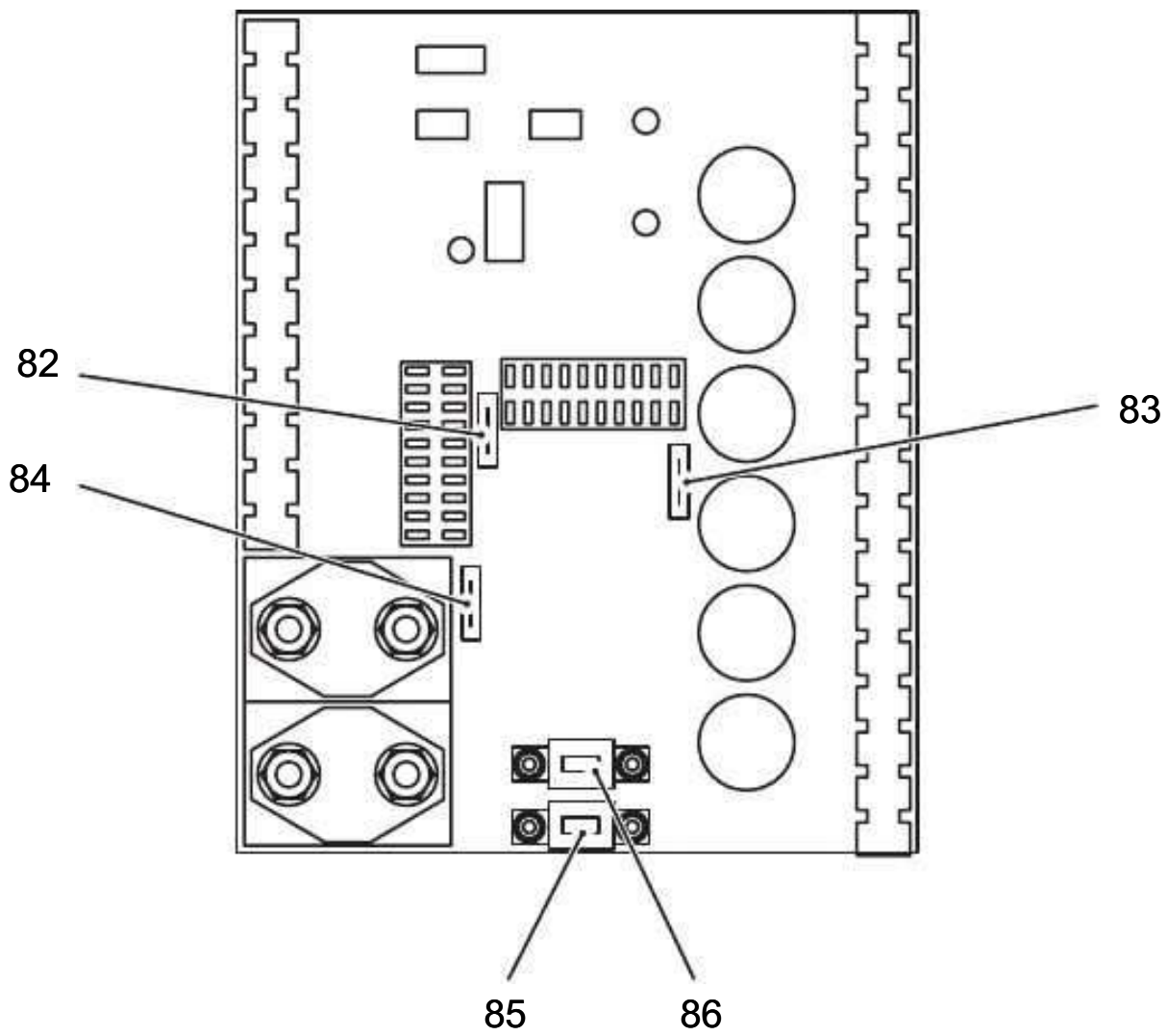

Item	Name	To protect	Rating (A)
82	6F1	Battery discharge indicator / battery hour meter	10
83	F1	Overall control circuit fuse	10
84	1F10	Drive motor (parallel to 1F1)	40
85	2F1	Pump motor	150
86	1F1	Drive motor (parallel to 1F10)	150

https://www.besttruckmanuals.com/

6.7 Restoring the truck to service after maintenance and repairs

Procedure

- Thoroughly clean the truck.
- Lubricate the truck according to the lubrication schedule, (see "Lubrication Schedule" on page 93).
- Clean the battery, grease the terminals and connect the battery.
- Charge the battery, (see "Charging the battery" on page 35).
- Check the transmission oil for condensation water and replace if necessary.
- Check the hydraulic oil for condensation water and replace if necessary.

The manufacturer's customer service department is specially trained to carry out these operations.

WARNING!

Faulty brakes can cause accidents

As soon as the truck has been started, test the brakes several times.

▶Report any defects immediately to your supervisor.

▶Tag out and decommission a faulty lift truck.

▶Only return the truck to service when you have identified and rectified the fault.

- Start up the truck, (see "Starting up the truck" on page 52).

If there are switching problems in the electrical system, apply contact spray to the exposed contacts and remove any oxide layers on the contacts of the controls by applying them repeatedly.

https://www.besttruckmanuals.com/

7 Safety tests to be performed at intervals and after unusual incidents

➔ Perform a safety check in accordance with national regulations. Jungheinrich recommends the truck be checked to FEM guideline 4.004. The Jungheinrich safety department has trained personnel who are able to carry out inspections.

The truck must be inspected at least annually or after any unusual event by a qualified inspector (be sure to comply with national regulations). The inspector shall assess the condition of the truck from purely a safety viewpoint, without regard to operational or economic circumstances. The inspector shall be sufficiently instructed and experienced to be able to assess the condition of the truck and the effectiveness of the safety mechanisms based on the technical regulations and principles governing the inspection of forklift trucks.

A thorough test of the truck must be undertaken with regard to its technical condition from a safety aspect. The truck must also be examined for damage caused by possible improper use. A test report shall be provided. The test results must be kept for at least the next 2 inspections.

The owner is responsible for ensuring that faults are rectified immediately.

➔ A test plate is attached to the truck as proof that it has passed the safety inspection. This plate indicates the due date for the next inspection.

https://www.besttruckmanuals.com/

8 Decommissioning the industrial truck

If the truck is to be out of service for more than a month, e.g. for commercial reasons, it must be stored in a frost-free and dry room. All necessary measures must be taken before, during and after decommissioning as described hereafter.

WARNING!

Lifting and jacking up the truck safely

In order to raise the truck, the lifting gear must only be secured to the points specially provided for this purpose.

You may only work under a raised load handler / raised cab if they have been secured with a sufficiently strong chain or the fastening bolt.

In order to raise and jack up the truck safely, proceed as follows:

▶ Jack up the truck only on a level surface and prevent it from moving accidentally.

▶ Only use a jack with sufficient capacity. When jacking up the truck, take appropriate measures to prevent it from slipping or tipping over (e.g. wedges, wooden blocks).

▶ In order to raise the truck, the lifting gear must only be secured to the points specially provided for this purpose. (see "Identification points and data plates" on page 23).

▶ When jacking up the truck, take appropriate measures to prevent it from slipping or tipping over (e.g. wedges, wooden blocks).

When the truck is out of service it must be jacked up so that all the wheels are clear of the ground. This is the only way of ensuring that the wheels and wheel bearings are not damaged.

If the truck is to be out of service for more than 6 months, agree further measures with the manufacturer's customer service department.

8.1 Prior to decommissioning

Procedure

- Thoroughly clean the truck.

WARNING!

Faulty brakes can cause accidents

As soon as the truck has been started, test the brakes several times.

▶ Report any defects immediately to your supervisor.

▶ Tag out and decommission a faulty lift truck.

▶ Only return the truck to service when you have identified and rectified the fault.

- Test the brakes.
- Check the hydraulic oil level and replenish if necessary, (see "Consumables" on page 94).
- Apply a thin layer of oil or grease to any non-painted mechanical components.
- Lubricate the truck according to the lubrication schedule, (see "Lubrication Schedule" on page 93).
- Charge the battery, (see "Charging the battery" on page 35).
- Disconnect the battery, clean it and grease the terminals.
  In addition, follow the battery manufacturer's instructions.

https://www.besttruckmanuals.com/

- Spay all exposed electrical contacts with a suitable contact spray.

8.2 Action to be taken during decommissioning

NOTE

Full discharge can damage the battery

Self-discharge can cause the battery to fully discharge. Full discharge shortens the useful life of the battery.

▶Charge the battery at least every 2 months.

Charge the battery (see "Charging the battery" on page 35).

https://www.besttruckmanuals.com/

8.3 Restoring the truck to service after decommissioning

Procedure

- Thoroughly clean the truck.
- Lubricate the truck according to the lubrication schedule, (see "Lubrication Schedule" on page 93).
- Clean the battery, grease the terminals and connect the battery.
- Charge the battery, (see "Charging the battery" on page 35).
- Check the transmission oil for condensation water and replace if necessary.
- Check the hydraulic oil for condensation water and replace if necessary.

The manufacturer's customer service department is specially trained to carry out these operations.

WARNING!

Faulty brakes can cause accidents

As soon as the truck has been started, test the brakes several times.

▶Report any defects immediately to your supervisor.

▶Tag out and decommission a faulty lift truck.

▶Only return the truck to service when you have identified and rectified the fault.

- Start up the truck, (see "Starting up the truck" on page 52).

If there are switching problems in the electrical system, apply contact spray to the exposed contacts and remove any oxide layers on the contacts of the controls by applying them repeatedly.

9 Final de-commissioning, disposal

Final de-commissioning or disposal of the truck in must be performed in accordance with the regulations of the country of use. In particular, regulations governing the disposal of batteries, fuels and electronic and electrical systems must be observed.

The truck must only be disassembled by trained personnel in accordance with the procedures as specified by the manufacturer. Note the manufacturer’s safety instructions as specified in the service documentation.

https://www.besttruckmanuals.com/

10 Human vibration measurement

Vibrations that affect the driver during operation over the course of the day are known as human vibrations. Excessive human vibrations will cause the driver long term health problems. The European "2002/44/EC/Vibration" operator directive has therefore been established to protect drivers.
To help operators to assess the application situation, the manufacturer offers a service of measuring these human vibrations.

https://www.besttruckmanuals.com/

Instructions for use

Jungheinrich traction battery

Table of contents

https://www.besttruckmanuals.com/

1 Jungheinrich traction battery

with positive tubular plates type EPzS and EPzB

Rating Data

1. Nominal capacity C5:	See type plate
2. Nominal voltage:	2,0 V x No of cells
3. Discharge current::	C5/5h
4. Nominal S.G. of electrolyte*	
Type EPzS:	1,29 kg/l
Type EPzB:	1,29 kg/l
5. Rated temperature:	30° C
6. Nominal electrolyte level:	up to electrolyte level mark „max.“

* Will be reached within the first 10 cycles.

•Pay attention to the operation instruction and fix them close to the battery!
•Work on batteries to be carried out by skilled personnel only!

•Use protective glasses and clothes when working on batteries!
•Pay attention to the accident prevention rules as well as DIN EN 50272-3, DIN 50110-1!

•No smoking!
•Do not expose batteries to naked flames, glowing embers or sparks, as it may cause the battery to explode!

•Acid splashes in the eyes or on the skin must be washed with water. In case of accident consult a doctor immediately!
•Clothing contaminated by acid should be washed in water.

•Risk of explosion and fire, avoid short circuits!

•Electrolyte is highly corrosive!

•Batteries and cells are heavy!
•Ensure secure installation! Use only suitable handling equipment e.g. lifting gear in accordance with VDI 3616.

•Dangerous electrical voltage!
•Caution! Metal parts of the battery are always live. Do not place tools or other metal objects on the battery!

https://www.besttruckmanuals.com/

Ignoring the operation instructions, repair with non-original parts or using additives for the electrolyte will render the warranty void.

For batteries in classes Ⓔx I and Ⓔx II the instructions for maintaining the appropriate protection class during operation must be complied with (see relevant certificate).

1. Commissioning filled and charged batteries. For commissioning of unfilled batteries see separate instructions!

The battery should be inspected to ensure it is in perfect physical condition.

The charger cables must be connected to ensure a good contact, taking care that the polarity is correct. Otherwise battery, vehicle or charger could be damaged.

The specified torque loading for the polscrews of the charger cables and connectors are:

	steel
M 10	23 ± 1 Nm

The level of the electrolyte must be checked. If it is below the antisurge baffle or the top of the separator it must first be topped up to this height with purified water.

The battery is then charged as in item 2.2.

The electrolyte should be topped up to the specified level with purified water.

2. Operation

DIN EN 50272-3 «Traction batteries for industrial trucks» is the standard which applies to the operation traction batteries in industrial trucks.

2.1 Discharging

Be sure that all breather holes are not sealed or covered.

Electrical connections (e.g. plugs) must only be made or broken in the open circuit condition.

To achieve the optimum life for the battery, operating discharges of more than 80%

of the rated capacity should be avoided (deep discharge).
This corresponds to an electrolyte specific gravity of 1.13 kg/l at the end of the discharge. Discharged batteries must be recharged immediately and must not be left discharged. This also applies to partially discharged batteries.

2.2 Charging

Only direct current must be used for charging. All charging procedures in accordance with DIN 41773 and DIN 41774 are permitted. Only connect the battery assigned to a charger, suitable for the size of battery, in order to avoid overloading of the electric cables and contacts, unacceptable gassing and the escape of electrolyte from the cells.

In the gassing stage the current limits given in DIN EN 50272-3 must not be exceeded. If the charger was not purchased together with the battery it is best to have its suitability checked by the manufacturers service department. When charging, proper provision must be made for venting of the charging gases.

https://www.besttruckmanuals.com/

Battery container lids and the covers of battery compartments must be opened or removed. The vent plugs should stay on the cells and remain closed.

With the charger switched off connect up the battery, ensuring that the polarity is correct. (positive to positive, negative to negative). Now switch on the charger. When charging the temperature of the electrolyte rises by about 10°C, so charging should only begin if the electrolyte temperature is below 45°C. The electrolyte temperature of batteries should be at least +10°C before charging otherwise a full charge will not be achieved.

A charge is finished when the specific gravity of the electrolyte and the battery voltage have remained constant for two hours. Special instructions for the operation of batteries in hazardous areas. This concerns batteries which are used in accordance with EN 50014, DIN VDE 0170/0171 Ex (in areas with a firedamp hazard) or Ex II (in potentially explosive areas). During charging and subsequent gassing the container lids must be removed or opened so that the explosive mixture of gases loses its flammability due to adequate ventilation. The containers for batteries with plate protection packs must not be closed until at least half an hour after charging has past.

2.3 Equalising charge

Equalising charges are used to safeguard the life of the battery and to maintain its capacity. They are necessary after deep discharges, repeated incomplete recharges and charges to an IU characteristic curve. Equalising charges are carried out following normal charging. The charging current must not exceed 5 A/100 Ah of rated capacity (end of charge - see point 2.2).

Watch the temperature!

2.4 Temperature

An electrolyte temperature of 30°C is specified as the rated temperature. Higher temperatures shorten the life of the battery, lower temperatures reduce the capacity available. 55°C is the upper temperature limit and is not acceptable as an operating temperature.

2.5 Electrolyte

The rated specific gravity (S. G.) of the electrolyte is related to a temperature of 30°C and the nominal electrolyte level in the cell in fully charged condition. Higher temperatures reduce the specified gravity of the electrolyte, lower temperatures increase it. The temperature correction factor is -0.0007 kg/l per °C, e.g. an electrolyte specific gravity of 1.28 kg/l at 45°C corresponds to an S.G. of 1.29 kg/l at 30°C.

The electrolyte must conform to the purity regulations in DIN 43530 part 2.

https://www.besttruckmanuals.com/

3. Maintenance

3.1 Daily

Charge the battery after every discharge. Towards the end of charge the electrolyte level should be checked and if necessary topped up to the specified level with purified water. The electrolyte level must not fall below the anti-surge baffle or the top of the separator or the electrolyte „min“ level mark.

3.2 Weekly

Visual inspection after recharging for signs of dirt and mechanical damage. If the battery is charged regularly with a IU characteristic curve an equalising charge must be carried out (see point 2.3).

3.3 Monthly

At the end of the charge the voltages of all cells or bloc batteries should be measured with the charger switched on, and recorded. After charging has ended the specific gravity and the temperature of the electrolyte in all cells should be measured and recorded.

If significant changes from earlier measurements or differences between the cells or bloc batteries are found further testing and maintenance by the service department should be requested.

3.4 Annually

In accordance with DIN VDE 0117 at least once per year, the insulation resistance of the truck and the battery must be checked by an electrical specialist.

The tests on the insulation resistance of the battery must be conducted in accordance with DIN EN 60254-1.

The insulation resistance of the battery thus determined must not be below a value of 50 Ω per Volt of nominal voltage, in compliance with DIN EN 50272-3.

For batteries up to 20 V nominal voltage the minimum value is 1000 Ω.

4. Care of the battery

The battery should always be kept clean and dry to prevent tracking currents. Cleaning must be done in accordance with the ZVEI code of practice «The Cleaning of Vehicle Traction batteries».

Any liquid in the battery tray must be extracted and disposed of in the prescribed manner. Damage to the insulation of the tray should be repaired after cleaning, to ensure that the insulation value complies DIN EN 50272-3 and to prevent tray corrosion. If it is necessary to remove cells it is best to call in our service department for this.

https://www.besttruckmanuals.com/

5. Storage

If batteries are taken out of service for a lengthy period they should be stored in the fully charged condition in a dry, frost-free room. To ensure the battery is always ready for use a choice of charging methods can be made:

1. a monthly equalising charge as in point 2.3

2. float charging at a charging voltage of 2.23 V x the number of cells. The storage time should be taken into account when considering the life of the battery.

6. Malfunctions

If malfunctions are found on the battery or the charger our service department should be called in without delay. The measurements taken in point 3.3 will facilitate fault finding and their elimination.

A service contract with us will make it easier to detect and correct faults in good time.

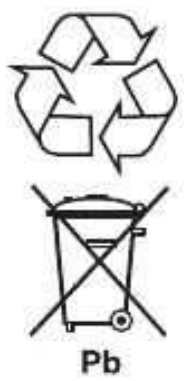

Back to the manufacturer!

Batteries with this sign must be recycled.

Batteries which are not returned for the recycling process must be disposed of as hazardous waste!

We reserve the right make technical modification.

https://www.besttruckmanuals.com/

7.Type plate, Jungheinrich traction battery

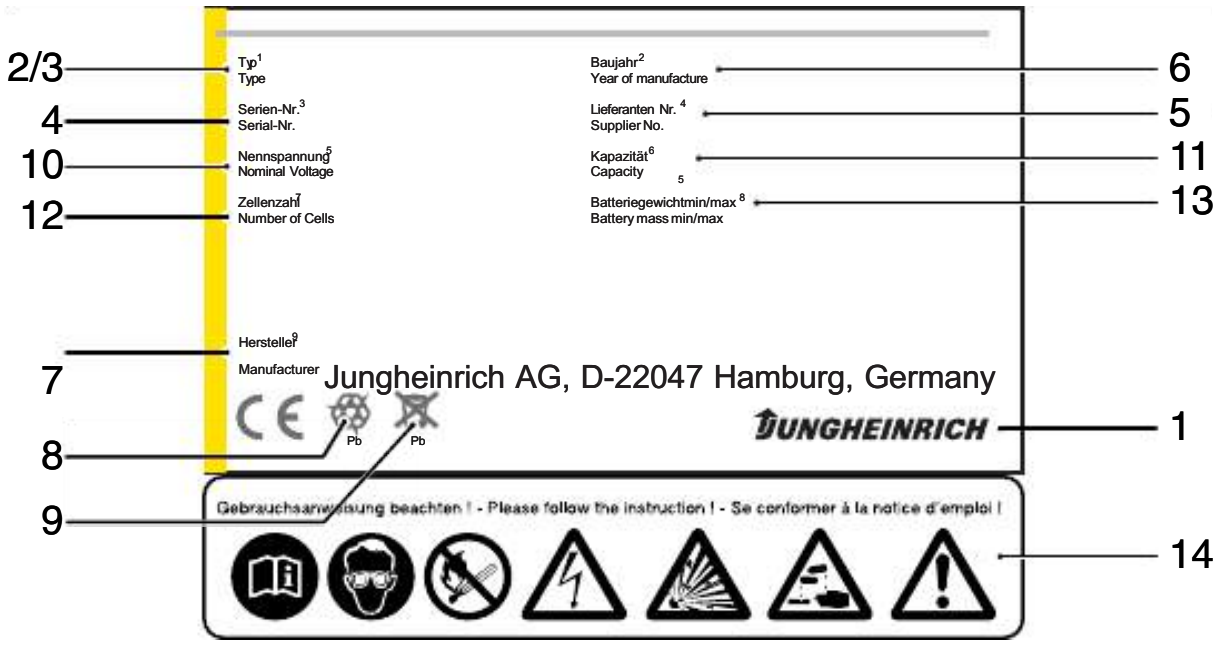

Item	Designation	Item	Designation
1	Logo	8	Recycling symbol
2	Battery designation	9	Dustbin/material
3	Battery type	10	Nominal battery voltage
4	Battery number	11	Nominal battery capacity
5	Battery tray number	12	Number of battery cells
6	Delivery date	13	Battery weight
7	Battery manufacturer's logo	14	Safety instructions and warnings

* CE mark is only for batteries with a nominal voltage greater than 75 volt.

https://www.besttruckmanuals.com/

Aquamatic/BFS III water refilling system for Jungheinrich traction battery with EPzS and EPzB cells with tubular positive plates

Aquamatic plug arrangement for the Operating Instructions

Cell series*		Aquamatic plug type (length)	
EPzS	EPzB	Frötek (yellow)	BFS (black)
2/120 – 10/ 600	2/ 42 – 12/ 252	50,5 mm	51,0 mm
2/160 – 10/ 800	2/ 64 – 12/ 384	50,5 mm	51,0 mm
–	2/ 84 – 12/ 504	50,5 mm	51,0 mm
–	2/110 – 12/ 660	50,5 mm	51,0 mm
–	2/130 – 12/ 780	50,5 mm	51,0 mm
–	2/150 – 12/ 900	50,5 mm	51,0 mm
–	2/172 – 12/1032	50,5 mm	51,0 mm
–	2/200 – 12/1200	56,0 mm	56,0 mm
–	2/216 – 12/1296	56,0 mm	56,0 mm
2/180 – 10/900	–	61,0 mm	61,0 mm
2/210 – 10/1050	–	61,0 mm	61,0 mm
2/230 – 10/1150	–	61,0 mm	61,0 mm
2/250 – 10/1250	–	61,0 mm	61,0 mm
2/280 – 10/1400	–	72,0 mm	66,0 mm
2/310 – 10/1550	–	72,0 mm	66,0 mm

* The cell series comprise cells with two to ten (twelve) positive plates, e.g. column EPzS. 2/120 - 10/600.

These are cells with the positive plate 60Ah. The type designation of a cell is e.g. 2 EPzS 120.

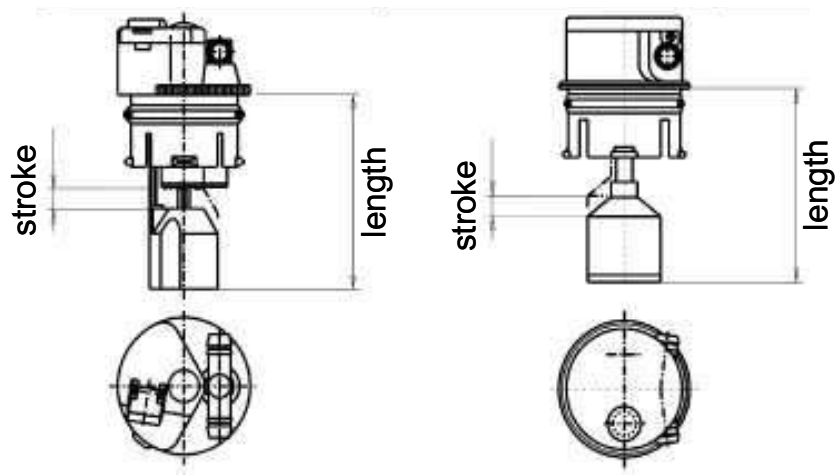

Aquamatic plug with diagnostics hole

Aquamatic plug BFS III with diagnostics hole

Non-adherence to the operating instructions, repairs carried out with non-original spare parts, unauthorised interference, and the use of additives for the electrolytes (alleged improvement agents) will invalidate any claim for warranty.

When using batteries which comply with Ⓔx I and Ⓔx II, it is important to follow the instructions on maintaining the respective protection class during operation (see associated certification).

https://www.besttruckmanuals.com/

Diagrammatic view

Equipment for the water refilling system

1. Water tank
2. Level switch
3. Discharge point with ball valve
4. Discharge point with solenoid valve
5. Charger
6. Sealing coupler
7. Closing nipple
8. Ion exchange cartridge with conductance meter and solenoid valve
9. Connection for untreated water
10. Charging lead

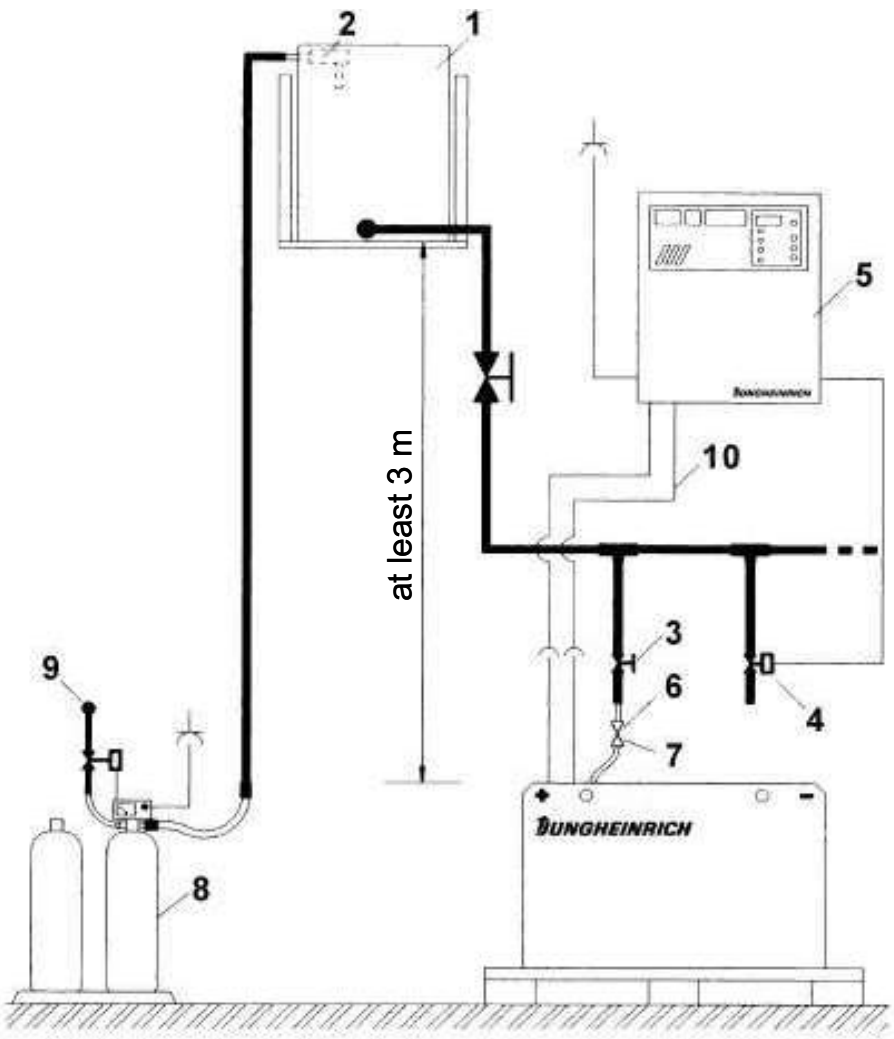

1. Design

The Aquamatic/BFS battery water refilling systems are used for automatically adjusting the nominal electrolyte level. Venting holes are provided for letting off the gases which arise during charging. In addition to the optical level indicator, the plug systems also have a diagnostics hole for measuring the temperature and the electrolyte density. All battery cells of the design series EPzS; EPzB can be equipped with the Aquamatic/BFS filling systems. The water can be refilled by means of a central sealing coupler through the hose connections in the individual Aquamatic/BFS plugs.

2. Application

The Aquamatic/BFS battery water refilling system is used in traction batteries for forklift trucks. The water refilling system is provided with a central water connection for the water supply. Soft PVC hose is used for this connection and for the hose connections for the individual plugs. The hose ends are put onto the hose connection sleeves located on the T or < pieces.

3. Function

The quantity of water required in the refilling process is controlled by the valve located in the plug in combination with the float and the float rods. In the Aquamatic System the existing water pressure at the valve turns off the water supply and ensures that the valve closes securely. When the maximum filling level is reached in the BFS system, the float and the float rods through a lever system close the valve with five times the buoyant force and consequently interrupt the water supply reliably.

https://www.besttruckmanuals.com/

4. Filling (manual/automatic)

The batteries should be filled with battery water as soon as possible before the battery charging comes to an end; this ensures that the refilled water quantity is mixed with the electrolyte. In normal operation it is usually sufficient to fill once a week.

5. Connection pressure

The water refilling unit is to be operated in such a way that the water pressure in the water pipe is between 0.3 bars and 1.8 bars. The Aquamatic System has an operating pressure range of between 0.2 bars and 0.6 bars. The BFS system has an operating pressure range of 0.3 bars to 1.8 bars. Deviations from the pressure ranges impair the system's functional reliability. This wide pressure range permits three types of filling.

5.1 Falling water

The height of the tank is chosen to suit whichever water refilling system is used. For the Aquamatic System the installation height is 2 m to 6 m and for the BFS system the installation height is 3 m to 18 m over the battery surface.

5.2 Pressurised water

The pressure-reducing valve in the Aquamatic System is set from 0.2 bars to 0.6 bars and from 0.3 bars to 1.8 bars in the BFS system.

5.3 Water Refill Trolley (serviceMobil)

The submergible pump located in the ServiceMobil's tank generates the necessary filling pressure. No difference in height is permitted between the standing level of the ServiceMobil and the standing level of the battery.

6. Filling duration

The length of time needed to fill the batteries depends on the conditions under which the battery is used, the ambient temperatures and the type of filling and/or the filling pressure. The filling time is approx. 0.5 to 4 minutes. Where filling is manual, the water feed pipe must be separated from the battery after filling.

7. Water quality

Only refilling water which conforms in quality to DIN 43530 part 4 may be used to fill the batteries. The refilling unit (tank, pipelines, valves etc.) may not contain any kind of dirt which could impair the functional reliability of the Aquamatic/BFS plug. For safety reasons it is recommendable to insert a filter element (optional) with a max. passage opening of 100 to 300 µm into the battery's main supply pipe.

https://www.besttruckmanuals.com/

8. Battery hose connections

Hose connections for the individual plugs are laid along the existing electric circuit. No changes may be made.

9. Operating temperature

The temperature limit for battery operation is set at 55° C. Exceeding this temperature damages the batteries. The battery filling systems may be operated within a temperature range of > 0° C to a maximum of 55° C.

CAUTION:
Batteries with automatic water refilling systems may only be operated in rooms with temperatures > 0° C (as there is otherwise a danger that the systems may freeze).

9.1 Diagnostics hole

To be able to measure the acid density and temperature easily, the water refilling systems must have a diagnostics hole with a 6.5 mm-diameter (Aquamatic plugs) or a 7.5 mm-diameter (BFS plugs).

9.2 Float

Different floats are used depending on the cell design and type.

9.3 Cleaning

The plug systems may only be cleaned with water. No parts of the plugs may come in contact with soap or fabrics which contain solvents.

10. Accessories

10.1 Flow indicator

To monitor the filling process, a flow indicator can be inserted into the water feed pipe on the battery side. During the filling process, the paddlewheel is turned by the flowing water. When the filling process ends, the wheel stops and this indicates the end of the filling process. (ident no.: 50219542).

10.2 Plug lifter

Only the appertaining special-purpose tool may be used to disassemble the plug systems (plug lifter). The greatest of care must be employed when prising out the plug to prevent any damage to the plug systems.

https://www.besttruckmanuals.com/

10.2.1 Clamping ring tool

The clamping ring tool is used to push on a clamping ring to increase the contact pressure of the hose connection on the plugs' hose couplings and to loosen it again.

10.3 Filter element

For safety reasons a filter element (ident no.: 50307282) can be fitted into the battery's main supply pipe for supplying battery water. This filter element has a maximum passage cross-section of 100 to 300 µm and is designed as a bag filter.

10.4 Sealing coupler

The water is supplied to the water refilling systems (Aquamatic/BFS) through a central supply pipe. This is connected to the water supply system at the battery charging station by means of a sealing coupler system. On the battery side a closing nipple (ident no.: 50219538) is mounted and the customer must place a sealing coupler construction on the water supply side (obtainable under ident. no.: 50219537).

11. Functional data

PS - self-sealing pressure: Aquamatic > 1.2 bars

BFS system none

D - rate of flow in the opened valve when the pressure is 0.1 bars: 350 ml/min

D1 - maximum permissible leakage rate in the closed valve when the pressure is at 0.1 bars: 2 ml/min

T - permissible temperature range: 0° C to a maximum of 65° C

Pa - operating pressure range: 0.2 to 0.6 bars in the Aquamatic system and operating pressure range: 0.3 to 1.8 bars in the BFS system.

https://www.besttruckmanuals.com/

2 Jungheinrich traction batterie

Maintenance free Jungheinrich traction batterie with positive tubular plates type EPzV and EPzV-BS

Rating Data

1. Nominal capacity C5:	See type plate
2. Nominal voltage:	2,0 Volt x No of cells
3. Discharge current:	C5/5h
4. Rated temperature:	30° C

EPzV batteries are valve-regulated batteries with an immobilised electrolyte and where a water refilling isn't permitted during the whole battery life. Instead of a vent plug there are valves used, who will be destroyed when they are opened.

When operating valve-regulated lead-acid batteries the same safety requirements as for vented cells apply to protect against hazards from electric current, from explosion of electrolytic gas and in case of the cell container is damaged, from the corrosive electrolyte.

- Pay attention to the operation instruction and fix them close to the battery!
- Work on batteries to be carried out by skilled personnel only!

- Use protective glasses and clothes when working on batteries!
- Pay attention to the accident prevention rules as well as DIN EN 50272, DIN 50110-1!

- No smoking!
- Do not expose batteries to naked flames, glowing embers or sparks, as it may cause the battery to explode!

- Acid splashes in the eyes or on the skin must be washed with water. In case of accident consult a doctor immediately!
- Clothing contaminated by acid should be washed in water.

- Risk of explosion and fire, avoid short circuits!

- Electrolyte is highly corrosive!
- In the normal operation of this batteries a contact with acid isn´t possible. If the cell containers are damaged, the immobilised electrolyte (gelled sulphuric acid) is corrosive like the liquid electrolyte.

- Batteries and cells are heavy!
- Ensure secure installation! Use only suitable handling equipment e.g. lifting gear in accordance with VDI 3616.

- Dangerous electrical voltage!
- Caution! Metal parts of the battery are always live. Do not place tools or other metal objects on the battery!

https://www.besttruckmanuals.com/

Ignoring the operation instructions, repair with non-original parts and non authorised interventions will render the warranty void.

For batteries in classes Ⓔx I and Ⓔx II the instructions for maintaining the appropriate protection class during operation must be complied with (see relevant certificate).

1. Commissioning

The battery should be inspected to ensure it is in perfect physical condition.

The battery end cables must have a good contact to terminals, check that the polarity is correct.

Otherwise battery, vehicle or charger could be destroyed.

The battery has to be charged according to item 2.2

The specified torque loading for the pole screws of the end cables and connectors are:

	steel
M 10	23 ± 1 Nm

2. Operation

DIN EN 50272-3 «Traction batteries for industrial trucks» is the standard which applies to the operation traction batteries in industrial trucks.

2.1 Discharging

Ventilation openings must not be sealed or covered.

Electrical connections (e.g. plugs) must only be made or broken in the open circuit condition.

To achieve the optimum life for the battery, operating discharges of more than 60% of the rated capacity should be avoided (deep discharge).

They reduce the battery life considerable. To measure the state of discharge use only the battery manufacturer recommended discharge indicators.

Discharged batteries must be recharged immediately and must not be left discharged.

This also applies to partially discharged batteries.

2.2 Charging

Only direct current must be used for charging. Charging procedures according to DIN 41773 and DIN 41774 must only be applied in the manufacturer approved modifications. Therefore only battery manufacturer approved chargers must be used. Only connect the battery assigned to a charger, suitable for the size of battery, in order to avoid overloading of the electric cables and contacts and unacceptable gassing of the cells. EPzV batteries have a low gas emission.

When charging, proper provision must be made for venting of the charging gases. Battery container lids and the covers of battery compartments must be opened or removed.

https://www.besttruckmanuals.com/

With the charger switched off connect up the battery, ensuring that the polarity is correct (positive to positive, negative to negative). Now switch on the charger. When charging the temperature of the battery rises by about 15° C, so charging should only begin if the battery temperature is below 35° C. The battery temperature should be at least +15°C before charging otherwise a full charge will not be achieved. Are the temperatures a longer time higher than +40° C or lower than +15° C, so the chargers need a temperatures regulated voltage.

The correction factor is, in accordance with DIN EN 50272-1, -0,005 V/c and Kelvin.

Special instructions for the operation of batteries in hazardous areas.

This concerns batteries which are used in accordance with EN 50 014, DIN VDE 0170 / 0171 Ex I (in areas with a firedamp hazard) or Ex II (in potentially explosive areas). The attention pictograms has to be respected.

2.3 Equalising charge

Equalising charges are used to safeguard the life of the battery and to maintain its capacity. Equalising charges are carried out following normal charging.

They are necessary after deep discharges and repeated incomplete recharges. For the equalising charges has to be used only the battery manufacturer prescribed chargers.

Watch the temperature!

2.4 Temperature

A battery temperature of 30°C is specified as the rated temperature. Higher temperatures shorten the life of the battery, lower temperatures reduce the available capacity. 45° C is the upper temperature limit and is not acceptable as an operating temperature.

2.5 Electrolyte

The electrolyte is immobilised in a gel. The density of the electrolyte can not be measured.

3. Maintenance

Don’t refill water!

3.1 Daily

Charge the battery immediately after every discharge.

https://www.besttruckmanuals.com/

3.2 Weekly

Visual inspection after recharging for signs of dirt and mechanical damage.

3.3 Quarterly

After the end of the charge and a rest time of 5 h following should be measured and recorded:

• the voltages of the battery

• the voltages of every cells

If significant changes from earlier measurements or differences between the cells or bloc batteries are found, further testing and maintenance by the service department should be requested.

3.4 Annually

In accordance with DIN VDE 0117 at least once per year, the insulation resistance of the truck and the battery must be checked by an electrical specialist.

The tests on the insulation resistance of the battery must be conducted in accordance with DIN 43539-1.

The insulation resistance of the battery thus determined must not be below a value of 50 Ω per volt of nominal voltage, in compliance with DIN EN 50272-3.

For batteries up to 20 V nominal voltage the minimum value is 1000 Ω.

4. Care of the battery

The battery should always be kept clean and dry to prevent tracking currents. Cleaning must be done in accordance with the ZVEI code of practice «The Cleaning of Vehicle Traction batteries».

Any liquid in the battery tray must be extracted and disposed of in the prescribed manner.

Damage to the insulation of the tray should be repaired after cleaning, to ensure that the insulation value complies with DIN EN 50272-3 and to prevent tray corrosion. If it is necessary to remove cells it is best to call our service department for this.

5. Storage

If batteries are taken out of service for a lengthy period they should be stored in the fully charged condition in a dry, frost-free room.

To ensure the battery is always ready for use a choice of charging methods can be made:

1.a quarterly full charging like charge as in point 2.2. If any consumer is connected with, e.g. measure or controlling systems, it can be, that this charging is necessary every 14 days.

2.float charging at a charging voltage of 2.25 V x the number of cells.

The storage time should be taken into account when considering the life of the battery.

https://www.besttruckmanuals.com/

6. Malfunctions

If malfunctions are found on the battery or the charger our service department should be called without delay. The measurements taken in point 3.3 will facilitate fault finding and their elimination.

A service contract with us will make it easier to detect and correct faults in good time.

Back to the manufacturer!

Batteries with this sign must be recycled.

Batteries which are not returned for the recycling process must be disposed of as hazardous waste!

We reserve the right make technical modification.

7.Type plate, Jungheinrich traction battery

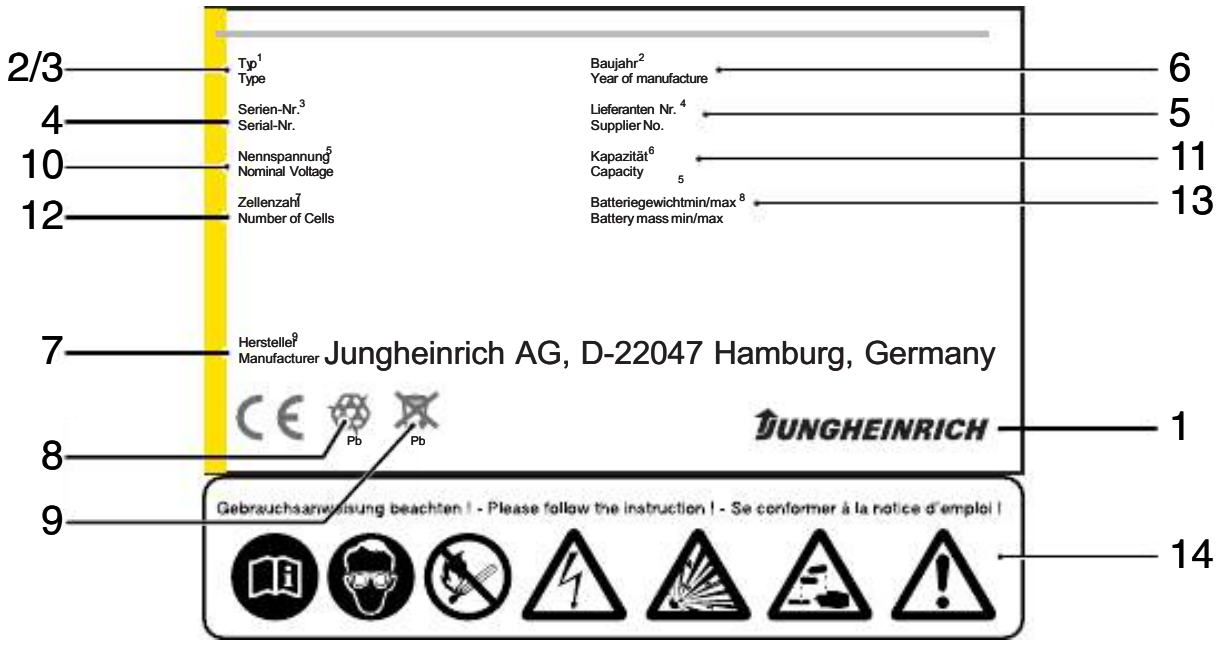

Item	Designation	Item	Designation
1	Logo	8	Recycling symbol
2	Battery designation	9	Dustbin/material
3	Battery type	10	Nominal battery voltage
4	Battery number	11	Nominal battery capacity
5	Battery tray number	12	Number of battery cells
6	Delivery date	13	Battery weight
7	Battery manufacturer's logo	14	Safety instructions and warnings

* CE mark is only for batteries with a nominal voltage greater than 75 volt.

https://www.besttruckmanuals.com/

https://www.besttruckmanuals.com/