ALMDV
Service Manual
AL BS2 Engines

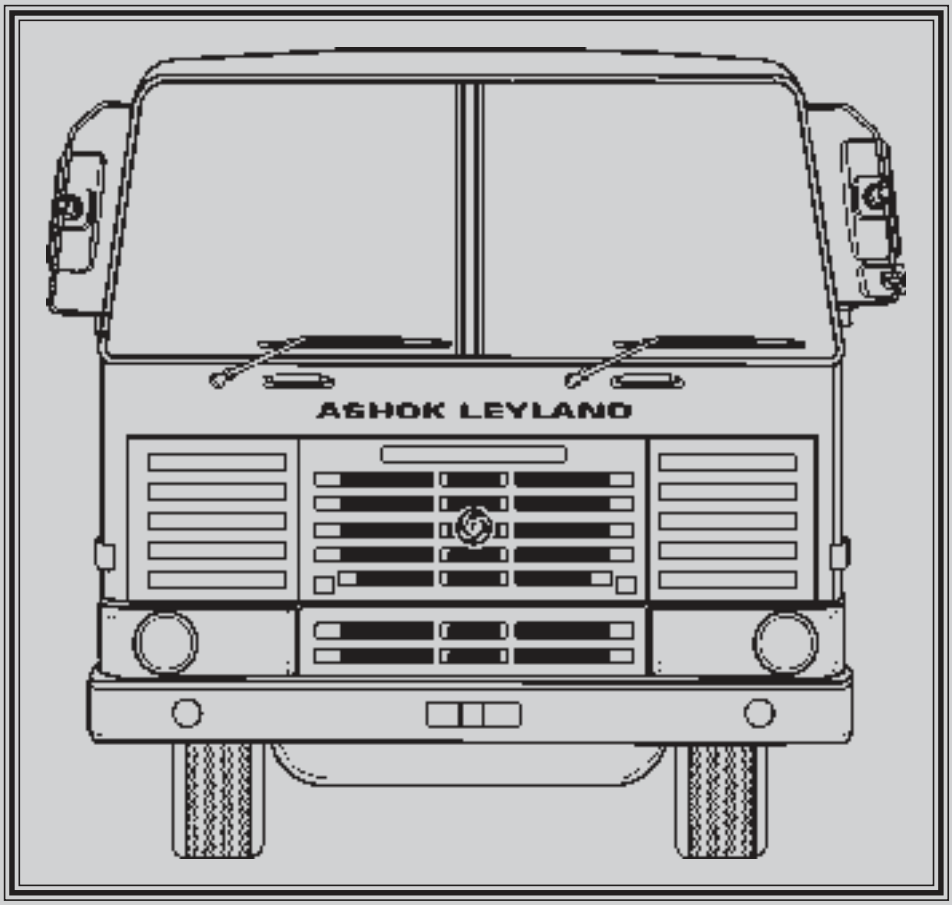

Ashok Leyland

CONTENTS

GROUP - 13

AL BS2 ENGINES (L62D-MK II & L62N-MK II)

CONTENTS

GROUP - 13

AL BS2 ENGINES (L62D-MK II & L62N-MK II)

CONTENTS

GROUP - 13

AL BS2 ENGINES (L62D-MK II & L62N-MK II)

13.0 GENERAL

13.0.0 Engine Type and Number

The Engine Sl. No is stamped onto the crankcase on the left side near dipstick.

Fig - 1

Fig. 1

The engine Sl. No. is stamped on RH rear end of cylinder head.

Fig - 2

Fig. 2

The crankshaft has a individual Sl. No. punched on machined face on its counter weight web thickness.

Fig - 3

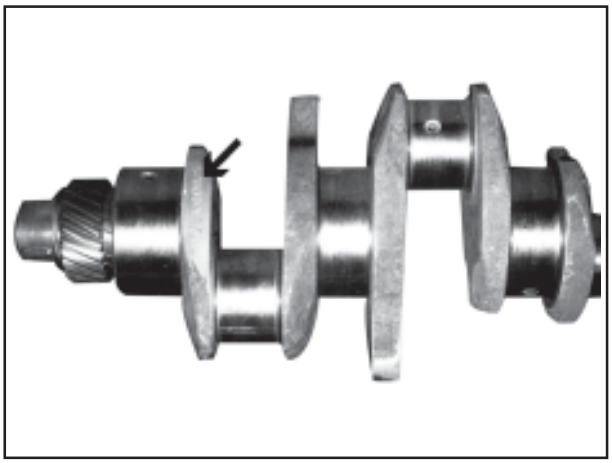

Fig. 3

13.0.1 Design and Operation

Water cooled 4 stroke Diesel Engine with direct fuel injection into re-entrant bowl combustion chamber in the piston crown.

Fig - 4 Representative Diagram - Intake Side

Fig - 5 Representative Diagram - Exhaust Side

13.0.2 Engine General Data

Models	**L62D-MK II**	**L62N-MK II**
Aspiration	Turbo with inter cooler	
Capacity	6540 cc	
No of cylinders	6	
Bore	107.28 mm	
Stroke	120.65 mm	
Max. output	100 Kw ± 2% @ 2400 rpm	117 Kw ± 2% @ 2400 rpm
Max. torque kgm at rpm (Gross)	460 Nm @ 1080 - 1400 rpm	580 Nm @ 1080 - 1400rpm
Weight of the Engine (Dry)	580 kg	
Compression ratio	17.5 : 1	
Compression pressure (psi)	390 - 410 (limit - 300)	
Idling speed	575 ± 50 rpm	
Firing order	1-5-3-6-2-4	
Valve clearance - Inlet/Exhaust	0.45 mm	
Lubrication system - Oil cooler	Water Cooled Plate Type	
Fuel Injection Equipment	**Distributor type (VE) with manifold pressure compensator (LDA)**	
Injection timing BTDC plunger travel	1.23 - 1.26 mm	1.30 - 1.33 mm
Injector pipe (OD x ID x LT)	6.35 x 1.8 x 750 mm	
Nozzle opening pressure	260 - 268 bar	
Valve Timing		
Inlet opens at	6° BTDC	
Inlet closes at	15° ABDC	
Exhaust opens at	52° BBDC	
Exhaust closes at	6° ATDC	
Valve Lift (inlet)	10.4 mm	
Valve Lift (Exhaust)	12.0 mm	

13.0.3 Specifications

Crankcase	
Air Pressure test engine block water ways & oil ways Leak rate permissiable	With 2.0 Bar pressure using Cosmo air pressure tester 6 cc / min. for 30 seconds.
Crank case bore axis to block top face	365.735 - 365.811 mm
Max. permissible unevenness of cylinder block top surface	0.076 mm
Cylinder bore size (without liner)	111.259 - 111.277 mm
Parent bore dia of main bearing	93.040 - 93.066 mm
Permissible ovality/taper of parent bore	0.051 mm
Cylinder Liner	
Liner	Soft, INSITU machined
Initial bore of liner before fitting to block	107.30 - 107.33 mm
Renew the liner when the wear measured at 1" below the top of liner exceeds	0.254 mm
Liner outside diameter	111.285 - 111.31
Interference fit between engine block and liner	0.005 - 0.041 mm
Height of liner above the block surface	0.69 - 0.90 mm
Max. permissible taper or ovality of a finished bore	0.025 mm
Piston Projection	0.40 - 0.65 mm
Piston Ring	
Piston Top Compression Ring	
1. Type	Molyinlaid Keystone
2. Nominal Width	3.19 mm
3. Ring closed gap - New	0.30 - 0.55 mm
4. Nominal Side clearance - New	0.07 mm
5. Service Limit - Ring closed gap	2.032 mm
6. Service Limit - Side clearance	0.2032 mm
Piston Second Compression Ring	
1. Type	Tapered Faced Internally Bevelled
2. Width	2.368 - 2.380 mm
3. Ring closed gap - New	0.30 - 0.55 mm
4. Side clearance - New	0.065 - 0.097 mm
5. Service Limit - Ring closed gap	2.032 mm
6. Service Limit - Side clearance	0.2032 mm
Piston Conformable Oil Ring	
1. Type	Steel ring - Nitrided
2. Width	3.99 - 3.97 mm
3. Ring closed gap - New	0.30 - 0.50 mm
4. Side clearance - New	0.05 - 0.07 mm
5. Service Limit - Ring closed gap	2.032 mm
6. Service Limit - Side clearance	0.2032 mm
Piston	
1. Top Ring Groove Nominal Width	3.26 mm
2. Second Ring Groove Width	2.445 - 2.465 mm
3. Third COR Groove Width	4.02 - 4.04 mm

Connecting Rod		
Bush outer diameter (std)	45.193 - 45.154 mm	
Interference of small end bush in connecting rod	0.050 - 0.114 mm	
Connecting rod small end inner dia with bush	41.312 - 41.319	
Gudgeon pin type	Fully floating retained by circlips	
Gudgeon pin outside dia	41.275 - 41.306 mm	
Diametral clearance of pin in small end bush	0.031 - 0.045 mm	
Renew the small end bush when clearance exceeds	0.05 mm	
CYLINDER HEAD		
Nozzle tip protrusion	1.7 ± 0.3 mm	
Permissible uneveness	0.076 mm	
Original height	96.469 - 96.571 mm	
Minimum height after facing	96.01 mm	
Valve Seat Inserts		
Valve face angle Inlet / Exhaust	30° / 45°	
Valve seat angle Inlet / Exhaust	30° / 45°	
Outside dia of service valve inserts	Proposed	Current
Inlet	48.354 - 48.338 mm	48.374 - 48.361 mm
Exhaust	45.794 - 45.778 mm	45.756 - 45.809 mm
Interference of valve seat in cylinder head		
Inlet	0.055 mm - 0.091 mm	
Exhaust	0.048 - 0.083 mm	
Valve sink		
Inlet	1.15 - 0.83 mm	
Exhaust	1.16 - 1.04 mm	
Valve Guide		
Interference fit of valve guide in cylinder head	0.030 - 0.51 mm	
Height of valve guide top above cylinder head top face	15.48 mm	
Length of valve guide	62.00 mm	
Inner dia. of valve guide	8.720 - 8.700 mm	
Stem clearance in valve guide		
Inlet	0.04 - 0.075 mm	
Exhaust	0.065 - 0.100 mm	
Replace guides when clearance exceeds	0.185 mm	
Valve Spring		
No. of valve springs	Single Even Coil	
Direction of helix	RH	
Free length of spring	60.6 mm	
Solid length of spring not to exceed	32.5 mm	
Rocker Lever Bush		
Outer dia of rocker bush	24.766 - 24.790 mm	
Diametral clearance between rocker shaft and bushing	0.013 - 0.044 mm	
Renew rocker shaft bush when diametral clearance exceeds	0.089 mm	

13.12 AL BS2 ENGINES

Camshaft	
No. of cam shaft journals	4
Bearing type	Renewable Bush type
End thrust taken on	Front bearing only
Max. permissible runout of camshaft centre journal when supported on end journals	0.076 mm
Max. permissible runout of journal position where camshaft gear sits.	0.025 mm
Initial diametral clearance Renew brg. when diametral clearance exceeds	0.127 - 0.165 mm 0.254 mm
Interference of bush in engine block	0.013 - 0.064 mm
End play of camshaft	0.102 - 0.203 mm
Max. permissible end play	0.254 mm to be adjusted by shims
Camshaft journal dia	53.213 - 53.234 mm
Timing Gears	
Permissible back lash between each pair of gears	0.102/0.152 mm
Initial diametral clearance between idler gear and bush	0.051 - 0.076 mm
Initial diametral clearance between bush and spindle	0.025 - 0.083 mm
End float between thrust washer and idler gear	0.064 - 0.241 mm
Renew thrust washers when end play exceeds	0.305 mm
Interference fit of timing gears on crank shaft	0.019 - 0.044 mm
Interference of driving gear on camshaft	0.000 - 0.044 mm
Oil Pump	
Bore dia. of gears	17.386 - 17.399 mm
Diametral clearance of gear on idler spindle	0.068 - 0.093 mm
Interference of pump gear on driving shaft	0.000 - 0.033 mm
Radial clearance between oil pump housing and gear teeth	0.042 - 0.076 mm
Initial diametral clearance of upper driving shaft in bush	0.056 - 0.087 mm
Interference fit of drive gear on upper drive shaft	0.000 - 0.033 mm
Backlash between drive gear and camshaft gear	0.102 - 0.203 mm
Backlash between oil pump gear	0.559 - 0.660 mm
End float of the gear	0.114 - 0.191 mm
Pressure Relief Valve Spring	
Free length of PRV spring	53.34 mm
PRV spring tension	10.9 kg @ 40.64 mm length
No. of coils (PRV)	11½ effective 10
Oil filter bypass Spring tension	Compresses to 37.051 mm under a load of 2.84 kg
No. of coils (Bypass spring)	13
Engine oil pressure	
Minimum	1 kg/cm²
Maximum	3.5 - 4.2 kg/cm²

13.0.4 Description of Leading Engine Components

Cylinder Block - of high grade cast iron. Cylinders and the crankcase form an integral casting. The crankcase is enclosed from below by the oil sump.

Cylinder Liners (dry, INSITU finished/pre finished, soft type) - made of cast iron.

Cylinder Head - made of high-grade cast iron, accommodating all cylinders, fitted with exchangeable. Valve seat and valve guide INSTIU finished.

Crankshaft - an alloy steel forging, mounted in seven bearings with exchangeable shells. The main journals and crank-journals are nitrated.

Vibration Damper - viscous damper with double groove pulley is mounted on the front end of the crankshaft. Care should be taken while handling the vibration damper. Use proper special tool while extracting the damper pulley.

Alfin Pistons (re-entrant bowl type) - made of special grade aluminium alloy with cast iron insert to form the first compression ring seat.

Fig - 6

Main and Small - End Bearing Shells - thin-walled, with aluminium and tin or lead bronze linings for sliding surfaces.

Camshaft - made entirely of steel, mounted in the cylinder block in four exchangeable bearing bushes. Drive is supplied from the engine crankshaft through a gear train.

Valve Spring - made of spring steel, single, even pitched coil type spring.

Fuel Injection Equipment - MICO distributor type (VE) pump with manifold pressure compensator.

Push Rod - Tubular Rod 12 mm dia.

Fig - 6A

Rocker Lever - modified to increase Rocker Ratio.

Fig - 7

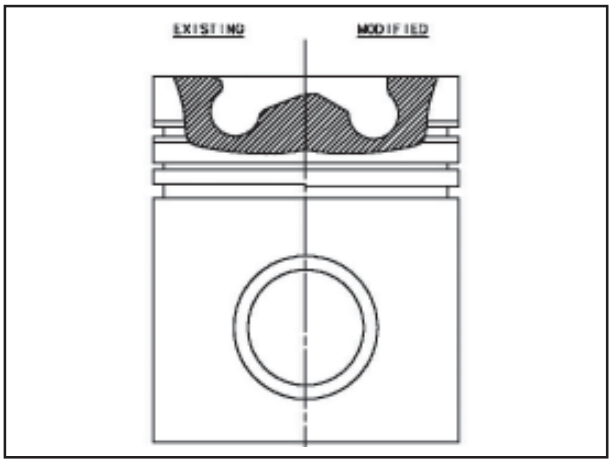

Fig. 6

Fig. 6A

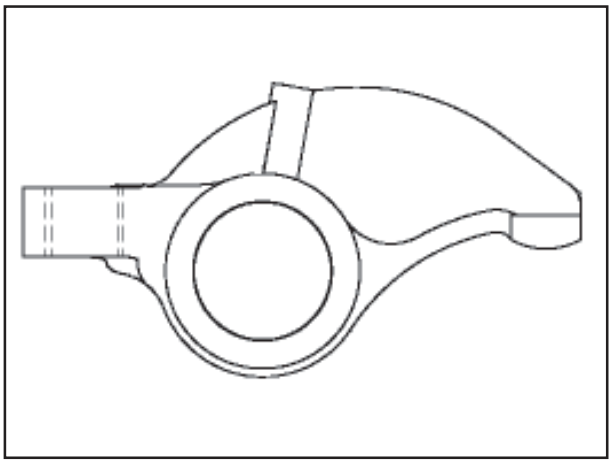

Fig. 7

13.0.5 Special Tools

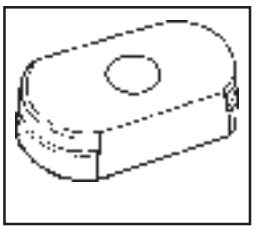

0101001
Extractor Cylinder Liner

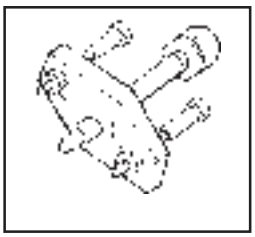

0101003
Extracotr Water Pump Hub

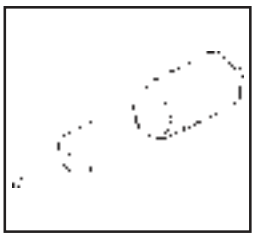

0101004
Pilot & Drift Valve Seat Inlet

0101005
Pilot & Drift Valve Seat Exhaust

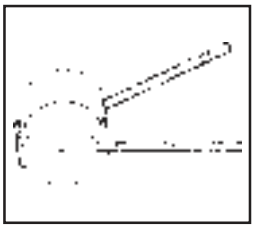

0101007
Compressor Piston Ring

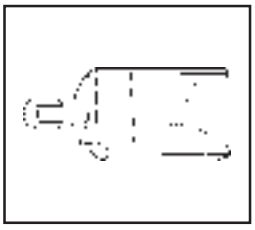

0101008
Extractor Crank Shaft Gear

0101010
Compressor Valve Spring

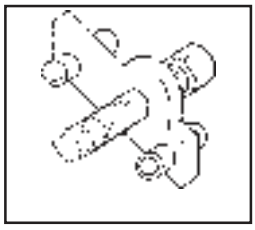

0101011
Wrench Oil Gallery Plug

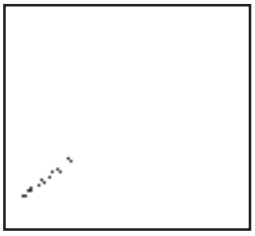

0101012
Brush Oil Gallery

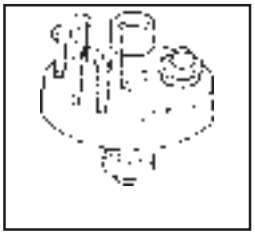

0101013
Extractor Cam Shaft Gear & Damper Pulley

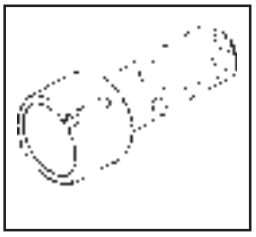

0101014
Centraliser Cam Shaft

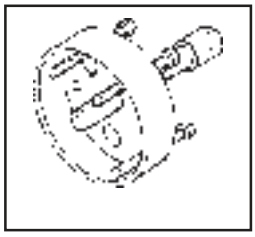

0101016
Extractor Crank Shaft Oil Seal Sleeve

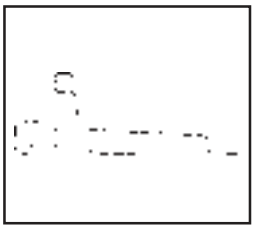

0101020
Adapter Compression Checking

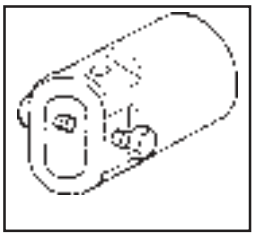

0101021
Extractor Injector

0101023
Spanner Engine Cranking

13.0.6 Engine Preliminary Checks

It is mandatory to carry out few preliminary checks on engine before dismounting the engine from the vehicle. The following cause and effects can lead to overhauling decision.

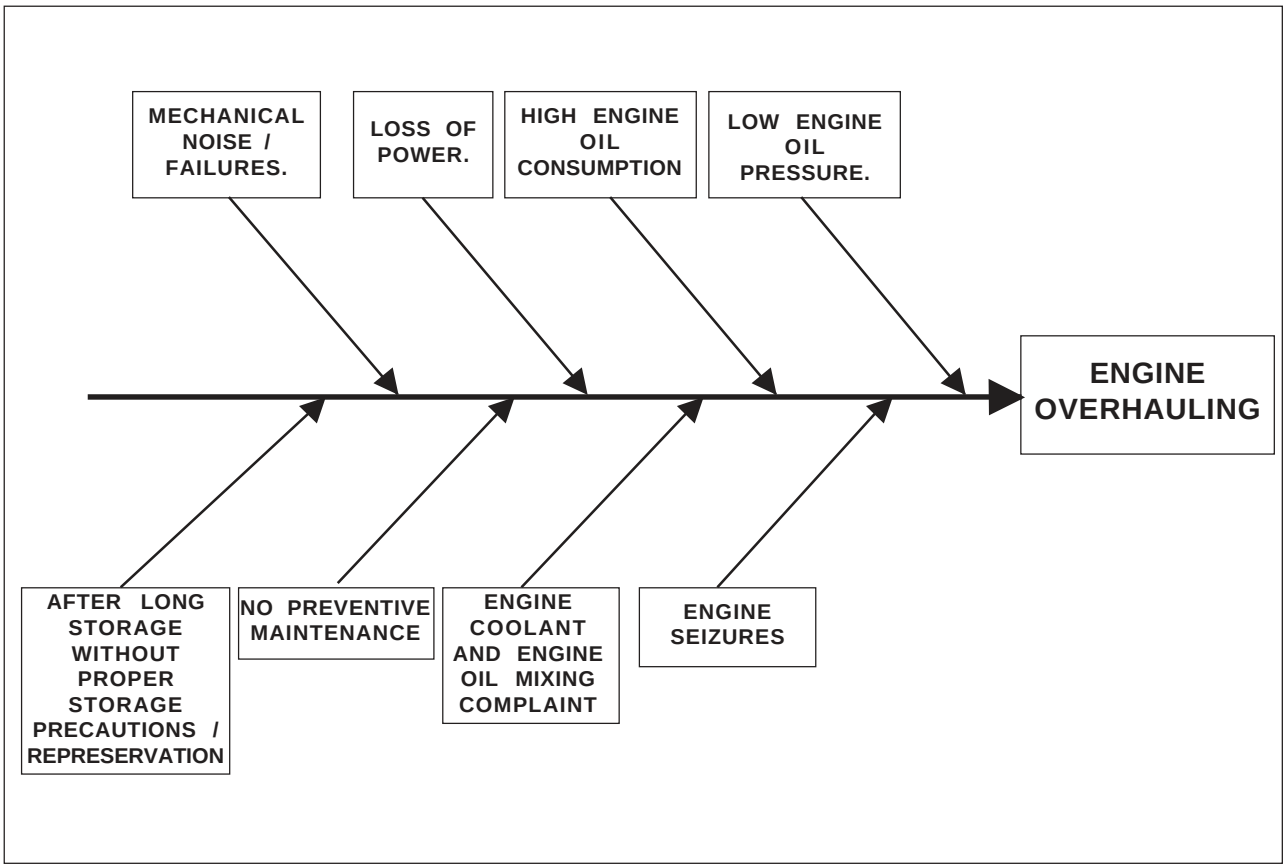

Fig - 9 Engine Overhauling

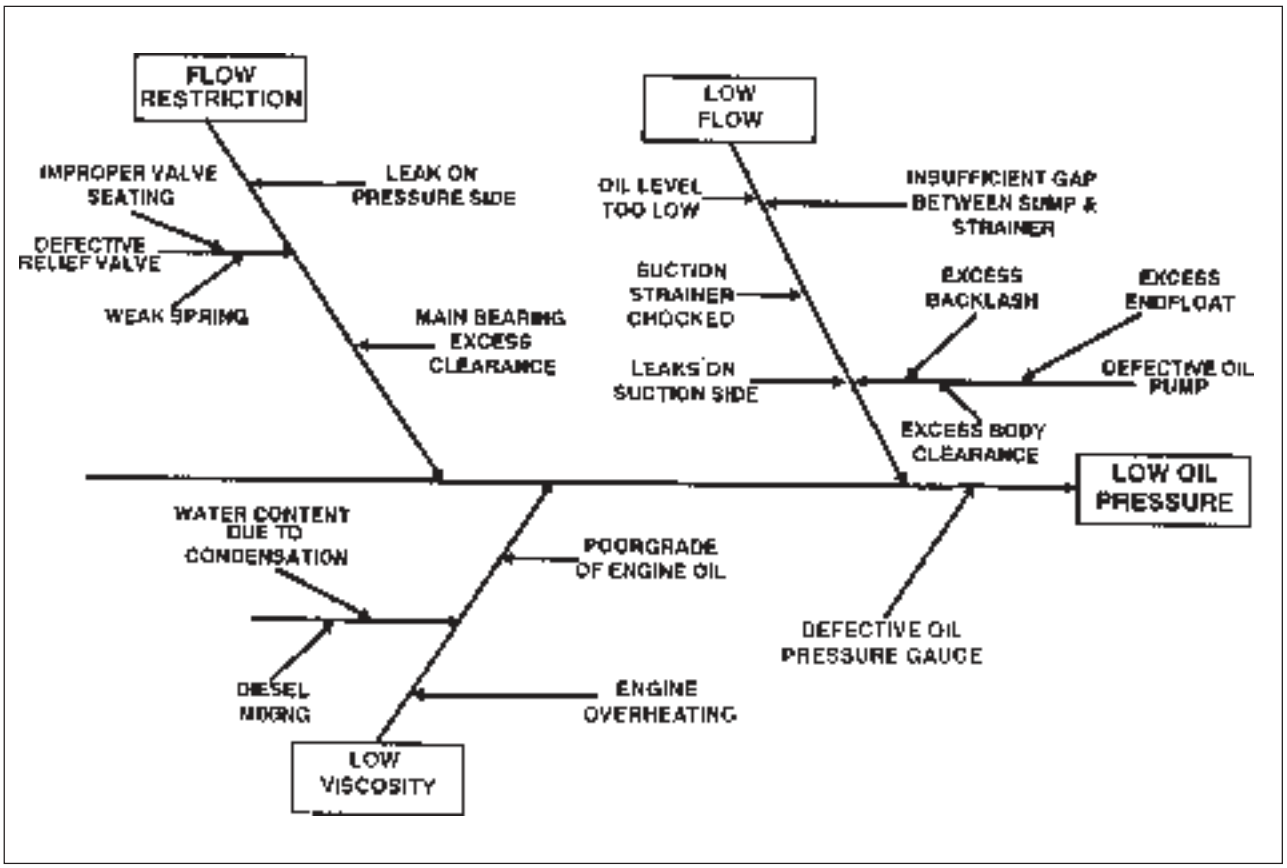

Fig - 10 Low Engine Oil Pressure

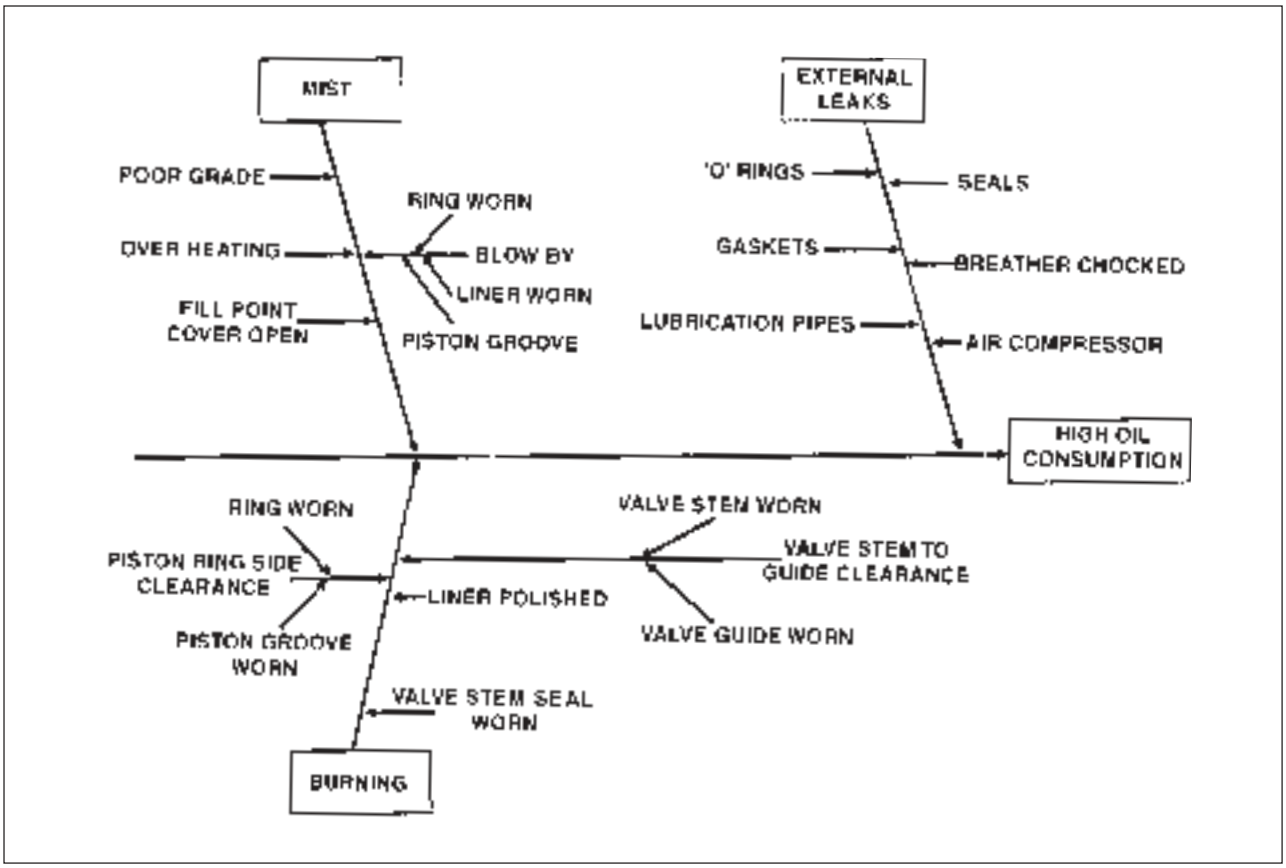

Fig - 11 High Oil Consumption

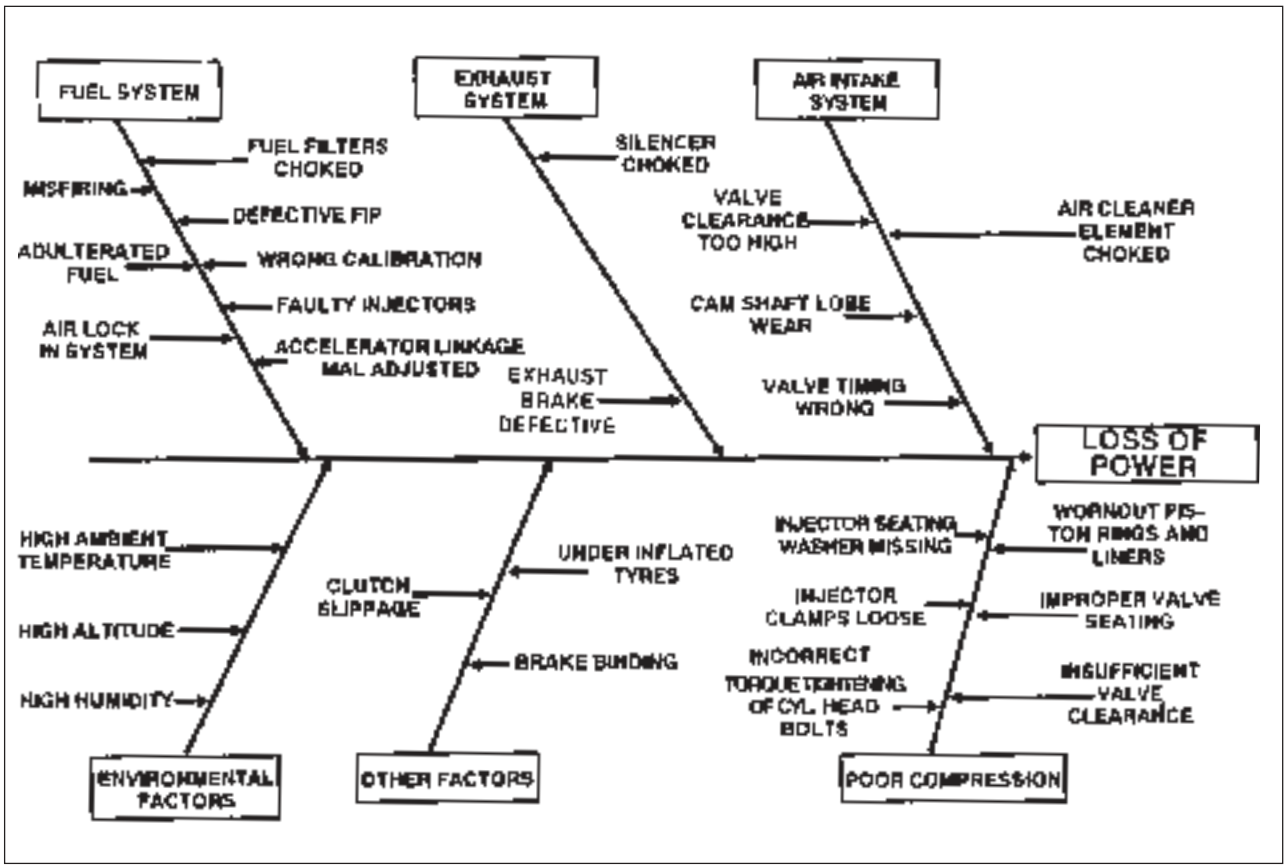

Fig - 12 Loss of Power

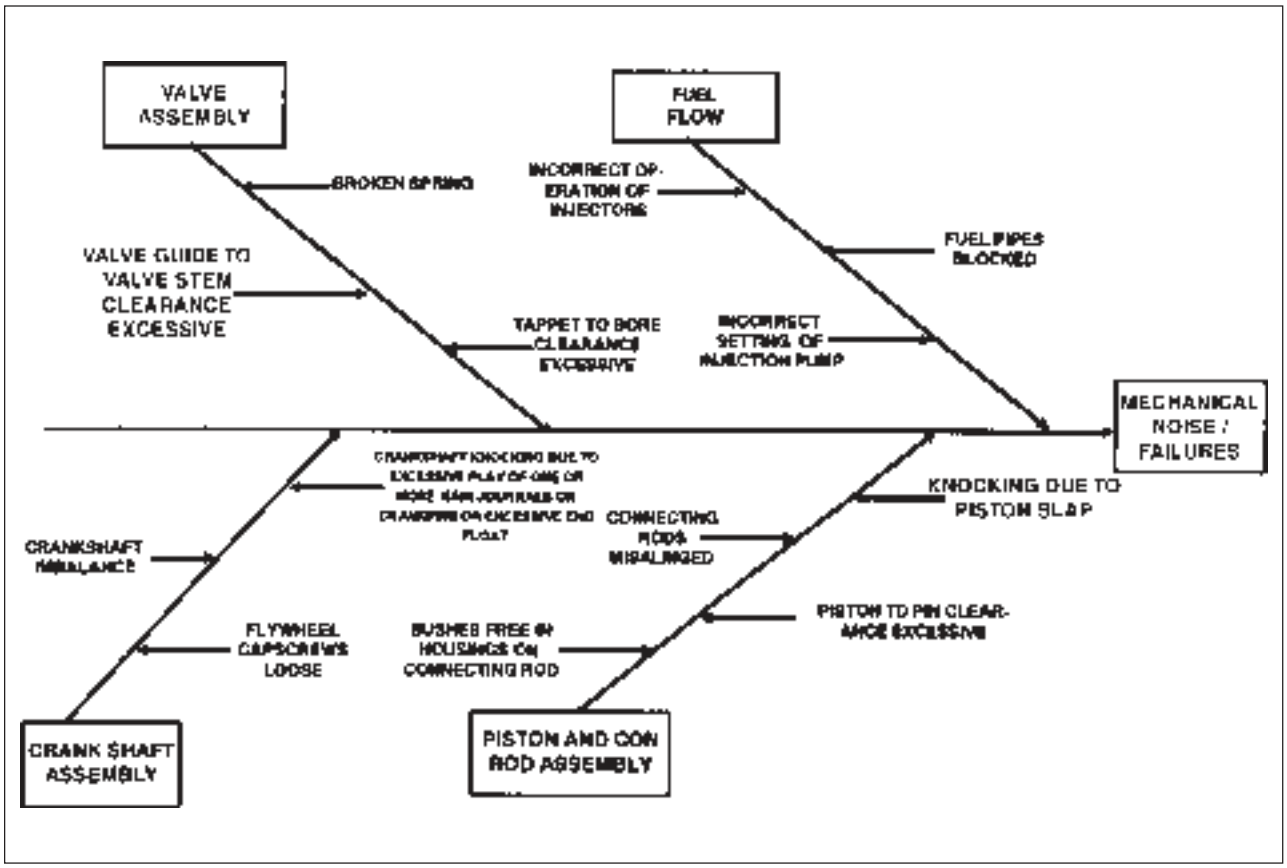

Fig - 13 Mechanical Noise / Failures

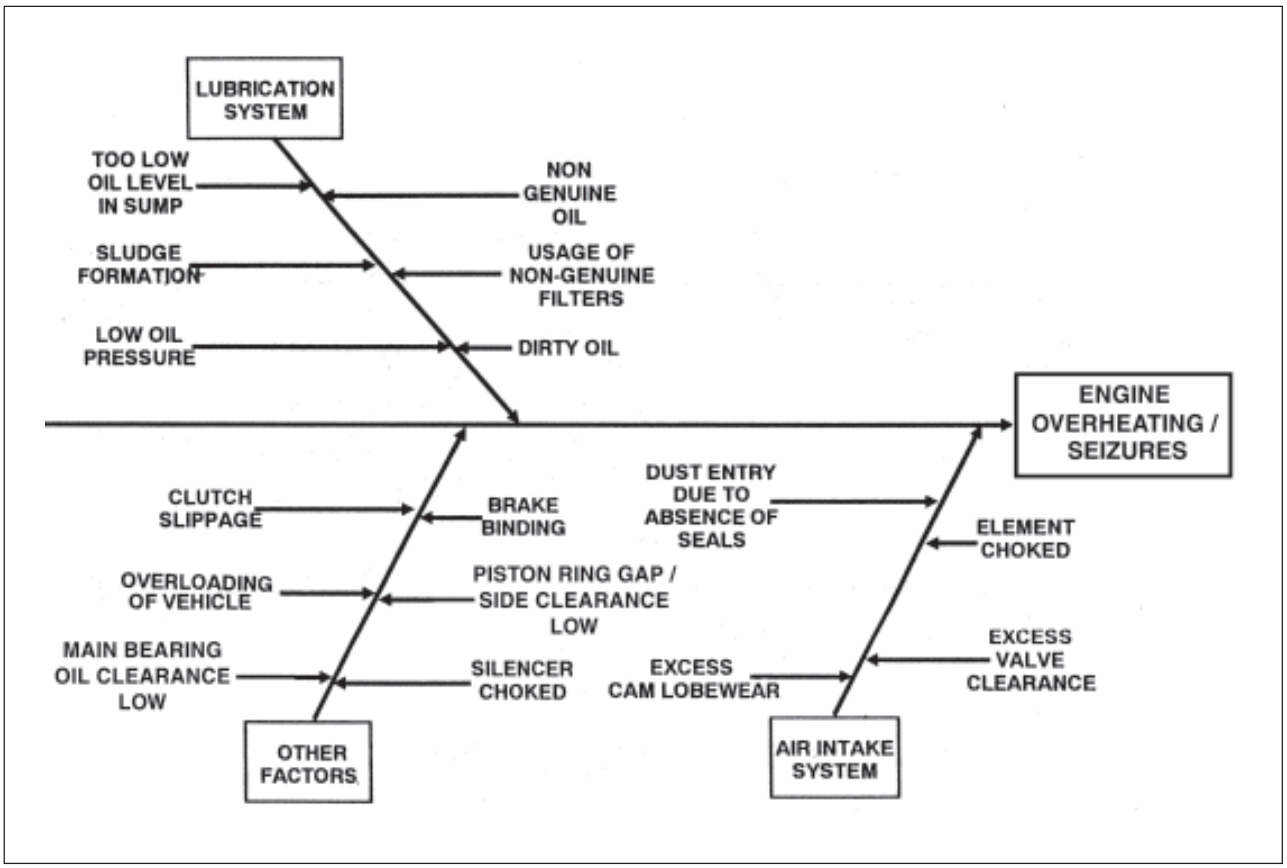

Fig - 14 Engine Overheating / Seizures

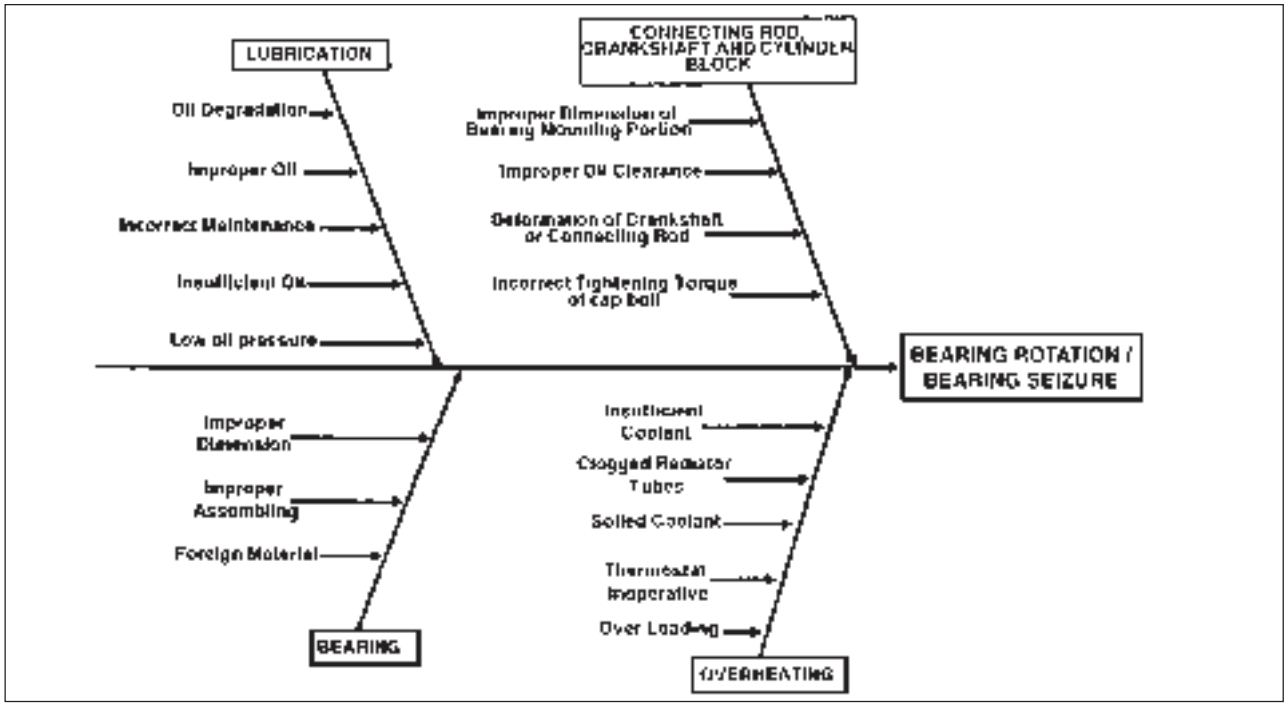

Fig - 15 Bearing Rotation / Bearing Seizures

13.0.7 To Test Engine Compression

Use **Special Tool 0101020 - Adaptor Compression Checking** with **Special Tool 0102021 - Gauge Compression Checking.** (Use Adaptor Cylinder Compression in place of nozzle).

Fig - 16

Warm-up engine to normal operation temperature (approx 80°C). Disconnect fuel delivery pipes and remove all six injectors.

Note: Use **Special Tool 0101021 - Extractor Injector** with **Special Tool 0102003 - Sliding Hammer**, if injector extraction is difficult.

Check valve clearance, if necessary adjust as per recommendation.

Set the Adaptor Cylinder Compression with standard gauge compression on First cylinder.

Fig - 17

Crank the engine approx 8 to 10 revolutions by actuating the starter motor. The battery must be in properly charged condition as to achieve a cranking speed of atleast 200 rpm. Keep engine stop cable in pulled in condition.

Repeat this procedure for all 6 cylinders.

Compression pressure (psi)

Minimum	-	300
Maximum	-	390 - 410

Pressure difference between each cylinders should be below 45 psi

If compression pressure is found below 300 psi Engine requires reconditioning.

In the last case it will be necessary to check valve tightness, condition of piston clearance of the respective cylinder.

Wet Compression Pressure Check

If the particular cylinder compression pressure is below 300 psi as per above dry check procedure, to locate fault with valve tightness or piston clearance repeat the compression pressure check after pouring few drops of engine oil thru Injector hole. If low compression persists, the fault is with valve seats.

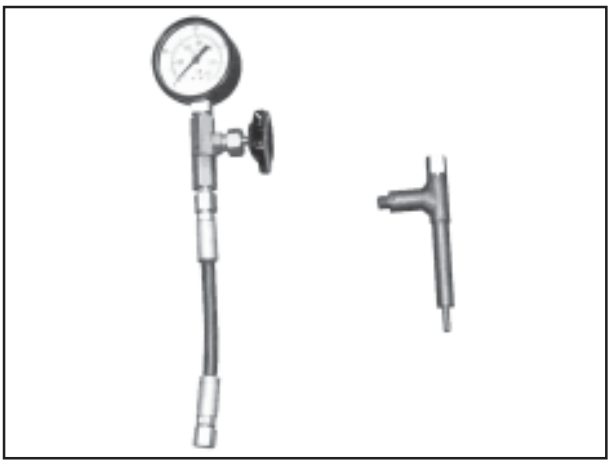

Fig. 16

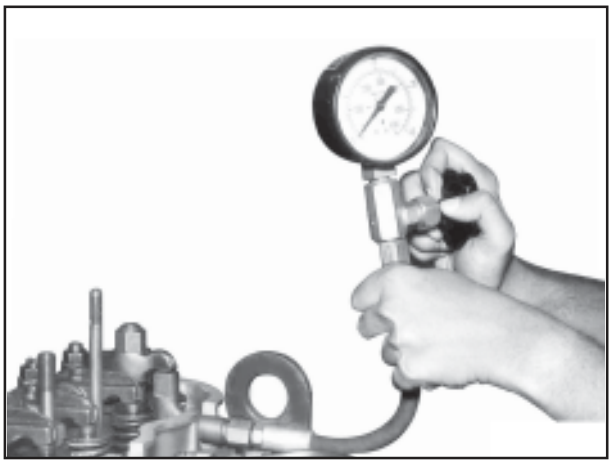

Fig. 17

13.1 TO REMOVE AND REFIT ENGINE FROM VEHICLE

13.1.0 To Remove Engine

- Disconnect battery terminals and choke the wheels.
- Drain engine oil
- Remove air intake system, turbo connection, charge air cooler, exhaust system and fuel pipe connections,
- Drain the coolant and remove cooling system, radiator, pipes, hoses etc.
- Disconnect electrical connection from alternator and starter motor.
- Disconnect the clutch / gear linkage system.
- Remove gear box and clutch.
- Remove engine control linkages.
- Unscrew engine fixing bolts of the engine mounting pad.
- Fasten hoisting cable to the lifting eyes on right front and left rear of engine.
- Use multipurpose jip crane to lift the engine. **Fig - 1**
- Lift the engine slightly and move it outwards.
- Unscrew the bolts securing the first cross member with chassis long member and remove the first cross member.
- Place the engine on suitable platform keeping in mind that the oil sump is not damaged.

Note: Use Engine stand of proper dimensions to keep the engine or use Special Maintenance Equipment. **Fig - 2**

- Engine should be thoroughly washed with a suitable cleaning liquid before it is dismantled.
- Dismantling and assembly should be carried out by experienced personal and atmost cleanliness must be observed. Special tools manufactured for this purpose to be used.

13.1.1 To Refit Engine

- The above mentioned procedure to be fitted back in reverse order.
- Ensure the alignment of the engine in the exact centre of the chassis frame.
- After connecting the engine control linkage check whether full load stop screw could be reached by depressing the accelerator pedal. Readjust if necessary.
- Before initial starting of the engine, check whether, engine injection pump, governor, gear box and cooling system have been filled with lubricants and coolants according to specifications.

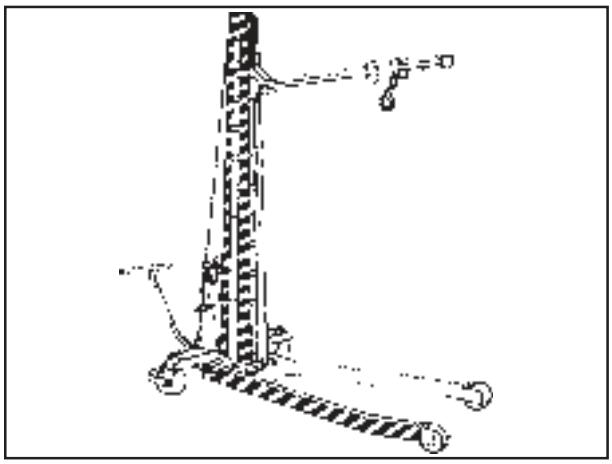

Fig. 1

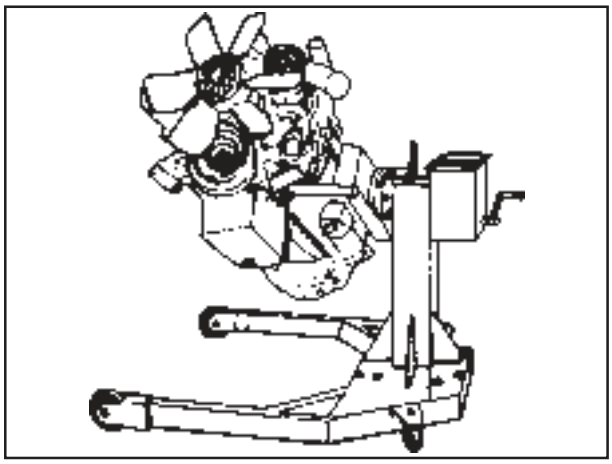

Fig. 2

13.2 CRANKCASE

13.2.0 To Remove and Refit Cylinder Liners

Use **Special Tool 0101001 - Extractor Cylinder Liner** for removal of cylinder liners with suitable bunk as shown. The liners can also be extracted without removing the crankshaft. The same special tool can be used for installation of cylinder liners using the locating bunk on top of the liner.

Fig - 1

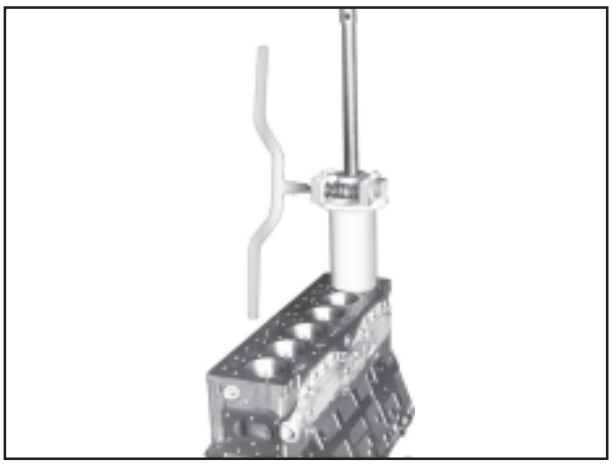

Fig. 1

Note: Apply a small amount of clean engine oil on the outer periphery of liner. Liners should be fitted after deep freezing (-10°C to -14°C).

The **Special Tool 0101001 - Extractor Cylinder Liner** should be used for liner fitment wherever deep freezing facility is not available. Care should be taken to avoid damages as liner is extremely thin and high interference fit is used.

Measure the liner projection above block surface 0.69 - 0.90 mm.

Fig - 2

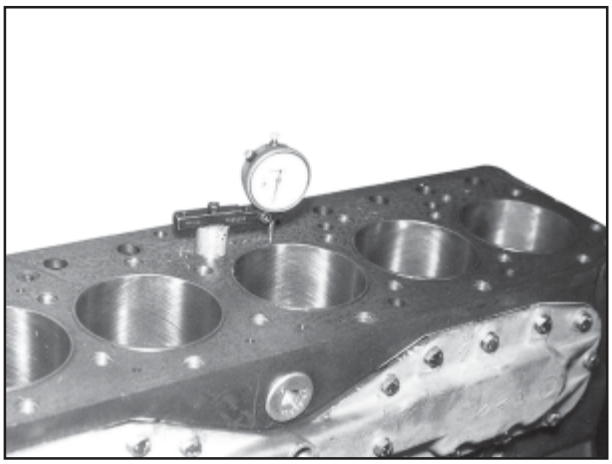

Fig. 2

13.2.0.1 To Pressure Test Crankcase

Remove all cylinder head studs using stud remover. Remove water jacket front cover and rear cover. Remove main oil gallery plugs.

Place the crankcase on dry flat surface. Fix dummy plates on cylinder head parting surface as well as front and rear covers with thick rubber gasket material.

Fig - 3

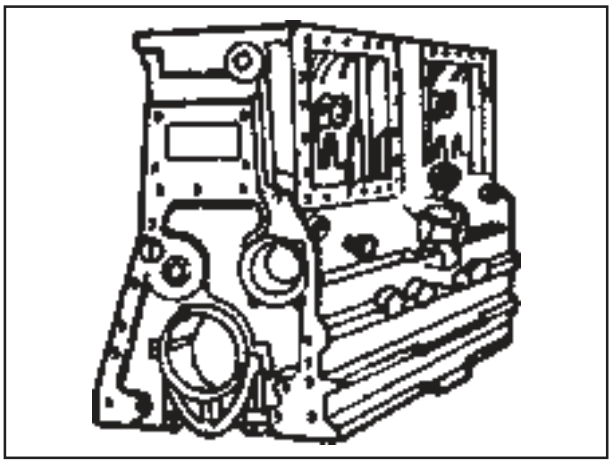

Fig. 3

Refer data for air pressure testing.

The casting defects of blow holes, sand inclusion, mechanical cracks, thermal cracks can be detected by pressure testing the crankcase.

Attend to defective crankcase for possible repairs or reject. Failing to perform pressure testing of crankcase can result in coolant and lubricant mixing complaint or low oil pressure complaint.

13.2.0.2 To Prepare Crankcase

Fix all 26 cylinder head M14 studs with locking compound on to crankcase and tighten to an even torque of 50 to 60 lb. ft.

Fig - 4

Fix oil pump top drive shaft pilot bush after ensuring oil hole position facing camshaft side.

Fig - 5

Ensure fitment of brass core plugs wherever necessary.

13.2.0.3 To Remove and Refit Camshaft Bushes

Using suitable mandrel and press remove the worn out bushes from crankcase. To refit deep freeze the bushes and fit into the crankcase.

Note: The first bush is dowel located and second bush oil hole alignment.

Remove / Refit main oil gallery plug using **Special Tool 0101011 - Wrench Oil Gallery Plug.**

Clean the main oil gallery and additional main gallery (for piston cooling jet) using **Special Tool 0101012 - Brush Oil Gallery.**

Fig - 6

Fix flywheel housing dowels to crankcase.

Note: Also check crankcase top surface flatness, parent bore geometry, oil gallery plugs and main bearing crush.

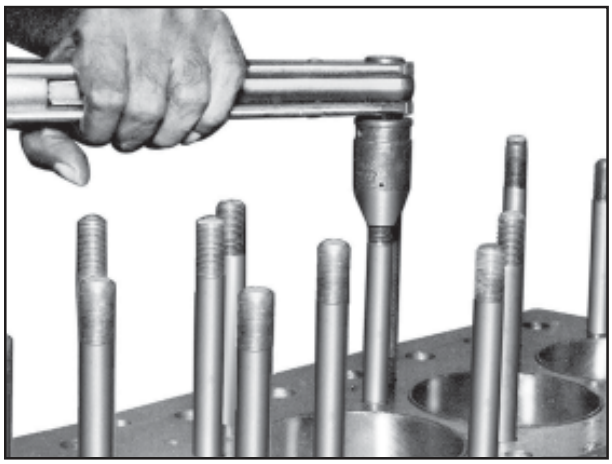

Fig. 4

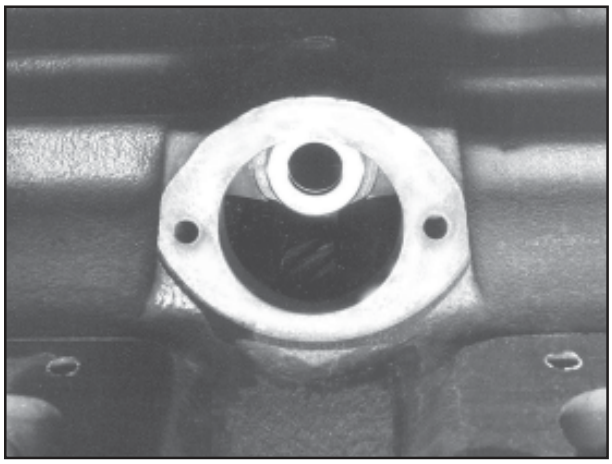

Fig. 5

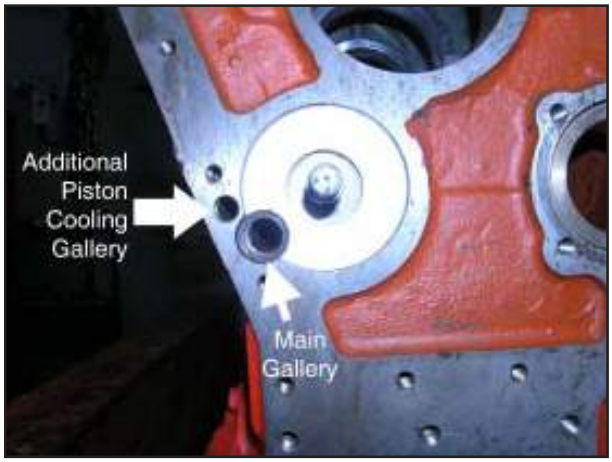

Fig. 6

13.2.0.4 To Remove and Refit Piston Cooling Jet

Loosen the banjo bolt and remove the cooling jet.

Clean and inspect the cooling jet.

Refit the cooling jet, dowel is provided for proper fitment on to the block.

Tighten the banjo bolt to the recommended torque.

Fig - 7 & 8

13.2.1 To Remove and Refit Timing Back Plate

Remove locking wire and unscrew set screws of the Timing back plate.

Take off the Timing back plate, taking care of both 3/8" dowel pins. Before refitment, remove the old gasket material and clean front face of the crankcase.

Fix fresh gasket to crank case face of the Timing Back plate.

Screw down Timing Back plate with set screws and spring washers.

Securely tighten hex screws and wire lock.

13.2.2 To Remove and Refit Flywheel Housing

Unscrew fixing screws of the flywheel housing.

Before refitment, remove the old gasket material and clean rear face of the crankcase. Fix fresh gasket to inner side of the flywheel housing.

Fig - 9

Fit flywheel housing and tighten it securely with hex screw.

Fig - 10

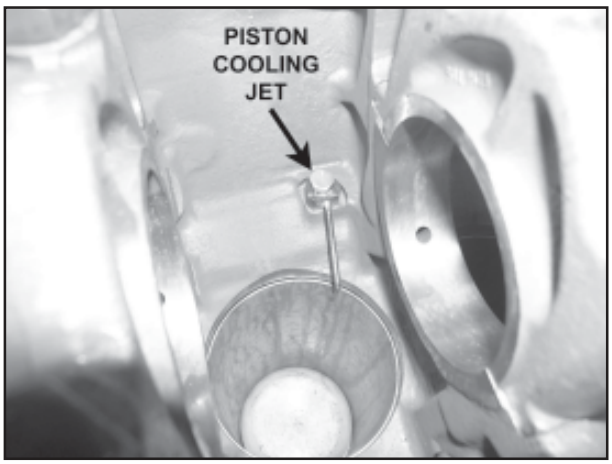

Fig. 7

Fig. 8

Fig. 9

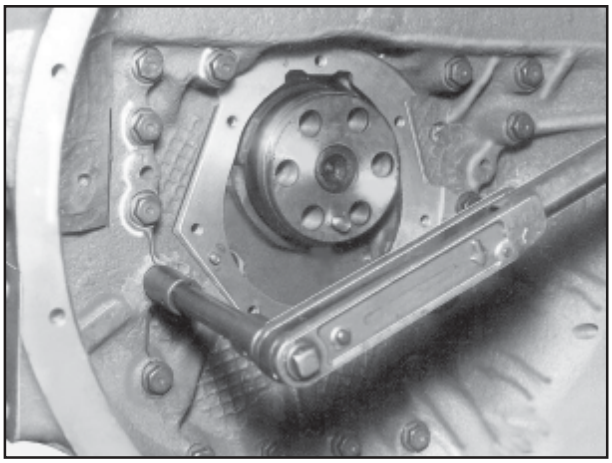

Fig. 10

13.3 TO REMOVE AND REFIT CRANKSHAFT, PISTON CONNECTING ROD ASSEMBLY

13.3.1 To Remove and Refit Viscous Damper and Double Groove Pulley

Remove the wire lock from damper mounting bolt.

Loosen the damper mounting bolts and remove.

Remove viscous vibration damper carefully.

Note: The vibration damper is a precision unit. Even a very slight damage might influence its operation and harm the engine.

Bend down lock washer securing the hex bolt of the crankshaft pulley.

Unscrew the bolt after removing lock plate with suitable socket.

Extract the double groove pulley using **Special Tool 0101013 - Extractor Damper Pulley and Cam Shaft Gear.**

Fig - 1

To refit double groove pulley and damper, reverse the procedure for removal.

13.3.2 To Remove and Refit Flywheel

Loosen the flywheel fixing flange bolts (6 Nos.

Unscrew flange bolts (6 Nos.) and remove flywheel.

Fig - 2

Inspect starter gear ring. If tooth edges are worn, gear ring can be reused by removing and reversing it with unworn face upwards.

For this purpose press out the gear ring after unscrewing bolts. Reverse or replace gear ring after heating it evenly to approx. 95°C.

Use locking wire 18 SWG for ring gear fasteners locking.

Fig - 3

Before replacing flywheel, thoroughly clean crankshaft adaptor and mounting face of flywheel.

The flywheel with starter gear ring is dynamically balanced.

Fit flywheel, taking care of the differing circular pitch of mounting Bolt holes tighten hex screws to a torque of 130 - 145 lb. ft.

14" flywheel - bolted ring gear.

15" flywheel - press type ring gear

Fig - 4

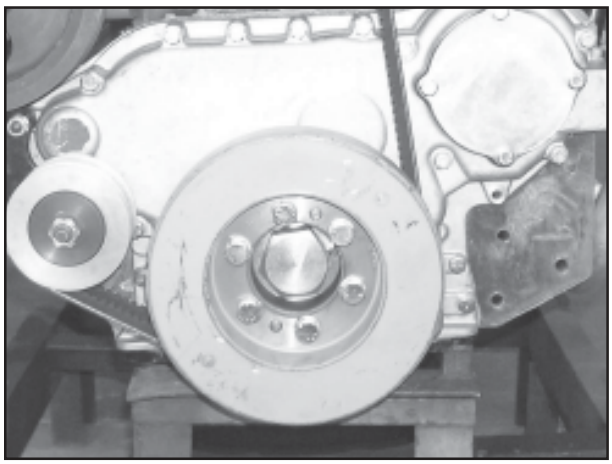

Fig. 1

Fig. 2

Fig. 3

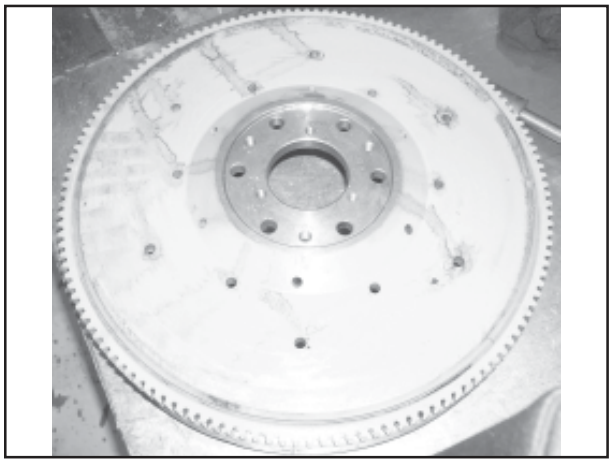

Fig. 4

Install flywheel.

Install the flywheel and tighten the flange bolts in diametrically opposite sequence.

Fig 4a & 4b

Finally slacken and tighten the flange bolts one by one to the specified torque.

Note: Check flywheel faceout with dial gauge it should not exceed 0.20 mm.

When tightening the bolt, apply engine oil to the threads and flywheel surface of the bolts.

Install the spigot bearing housing.

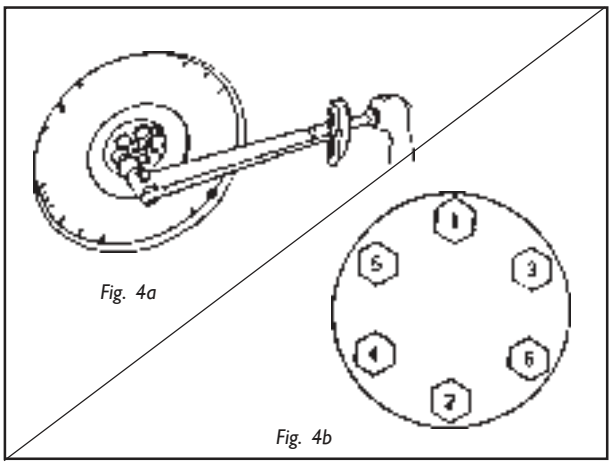

Fig. 4a

Fig. 4b

13.3.3 Piston and Connecting Rods

13.3.3.0 To Remove and Refit Piston with Connecting Rod

To Remove

Unscrew connecting rod bolts and remove bearing cap.

Fig - 5

Scrape off carbon deposit from the upper end of the cylinder bore.

Withdraw piston with con rod from cylinder bore.

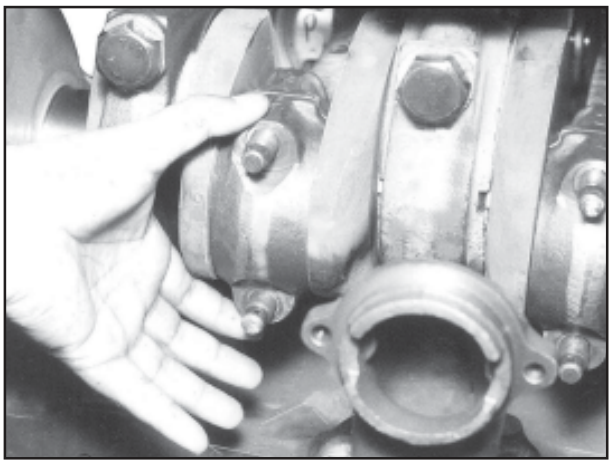

Fig. 5

To Refit

Lubricate piston, piston rings, cylinder bore and con rod bearing with engine oil.

Displace the piston ring gaps relative to each other by 180°

Revolve crankshaft so that the crankpin of the respective piston is in Bottom Dead Centre. position.

Fig - 6

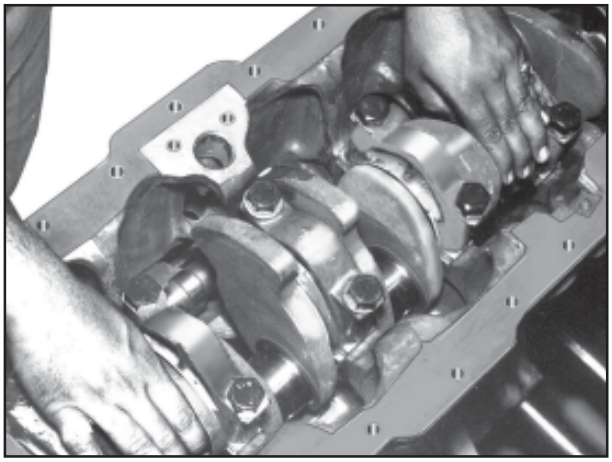

Fig. 6

Insert piston into the cylinder bore compressing the rings by means of **Special Tool 0101007 - Compressor Piston Ring.**

Fig - 7

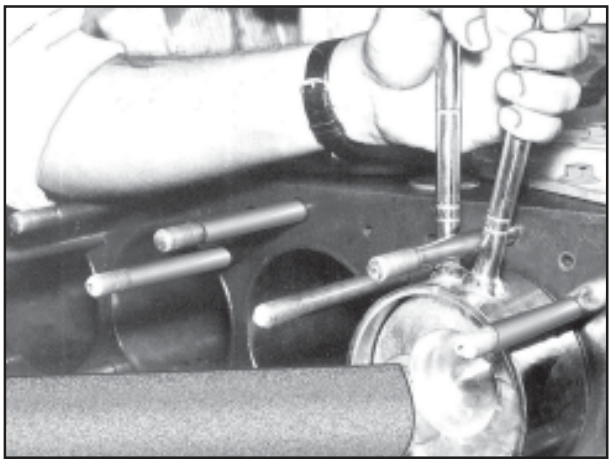

Fig. 7

Pull the con rod into the crankcase until the big end bearing is seated on the crankpin. Have a second person keep it in this position. Fit bearing cap with half bearing, taking care that the bearing halves are seated properly in the connecting rod and cap. Tighten con rod bolts alternatively, commencing with the lower one to a torque of 80 - 90 lb. ft..

Fig - 8

Fig. 8

13.3.3.1 To Renew Piston Rings

Remove compression rings and oil scraper ring with the aid of piston ring pliers/ring expanders.

Remove carbon deposits from piston ring grooves using a broken compression ring as scraper.

Fig - 9

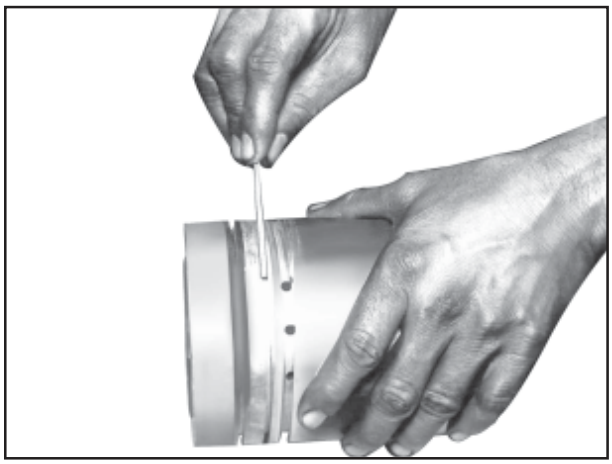

Fig. 9

Before fitting new piston rings check each ring gap separately by inserting the ring into the cylinder bore at right angles and measuring the ring gap with a feeler gauge.

Fig - 10

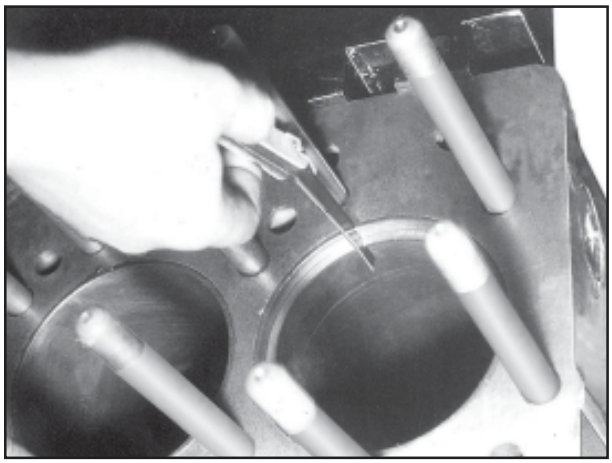

Fig. 10

Install piston rings.

Note: Apply oil over the piston ring. use a piston ring expander while fitting the rings.

Install the piston ring in sequence viz; oil ring, second ring and top ring with the identification mark at the top of the ring facing upwards.

Fig - 11

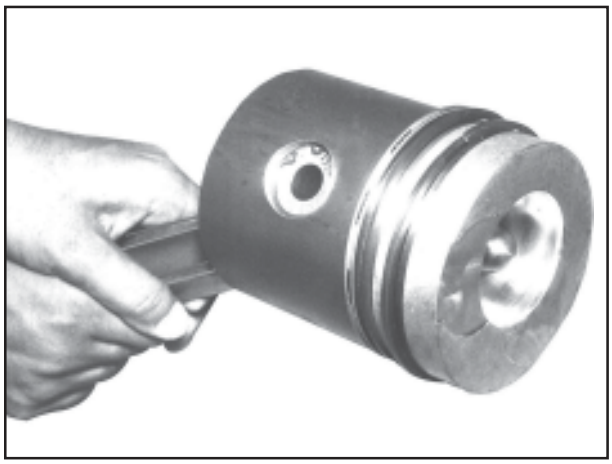

Fig. 11

Connect the ends of the coil and then fit the coil inside the piston ring after ensuring that the gap of the piston ring is 180° away from the joint of the coil. Coil and piston scraper ring are supplied together.

Arrange the piston ring so that their gaps are equally spaced.

Check axial play of the piston rings.

Fig - 12

Fig. 12

13.3.3.2 To Remove and Refit Gudgeon Pin

Removal

Remove gudgeon pin circlip with circlip plier.

Fig - 13

Remove the gudgeon pin by using suitable drift and copper hammer.

To Reassemble

Heat the piston to approx 120°C. Insert the gudgeon pin.

Note: If Induction heating facility is not available, use water as heating medium.

Fig - 14

Caution: Ensure the valve pockets in the piston crown and notches on the big end parent body of the connecting rods are on the camshaft side. The crown face of piston has a reference punch mark "Cam shaft side".

Inspect the I - Section of con rod for scratches and scorings. i.e. - mirror finish recommended.

Use lead or copper soft jaws when clamping connecting rods into a vice.

Insert a gudgeon pin circlip in to one piston eye groove.

Fig - 15

Insert the lubricated gudgeon pin into the piston eye.

Insert the second gudgeon pin circlip in its groove.

Fig - 16

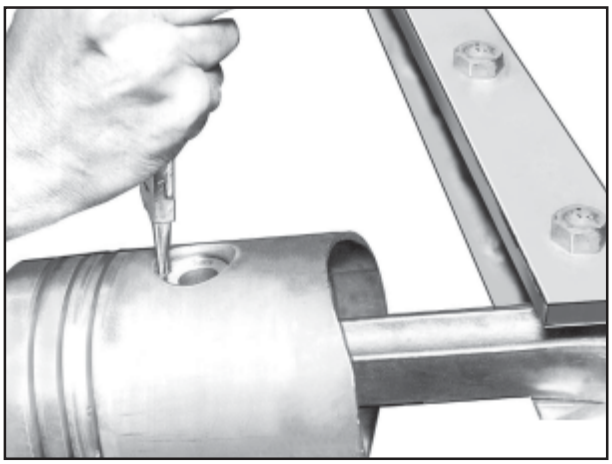

Fig. 13

Fig. 14

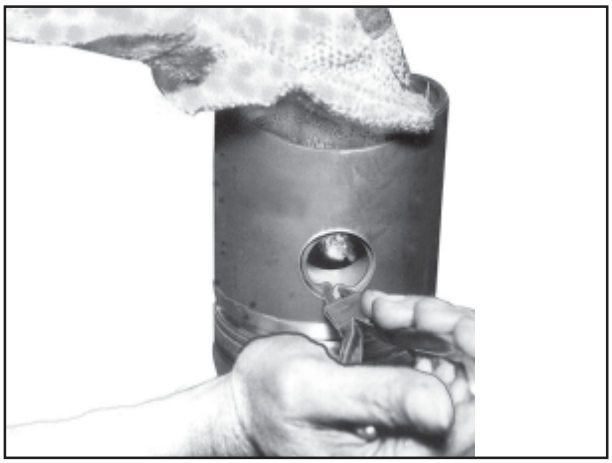

Fig. 15

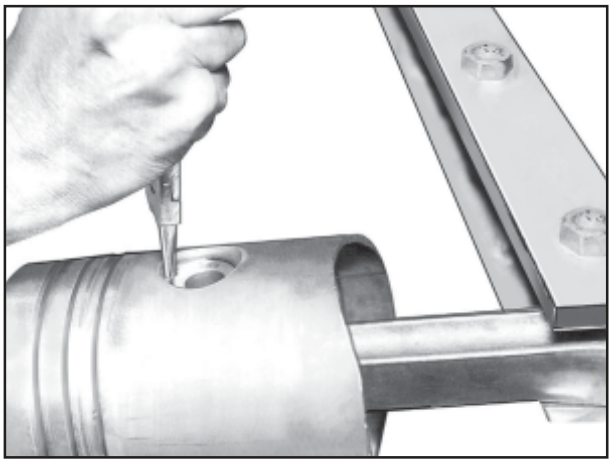

Fig. 16

13.3.3.3 Connecting Rods

General

The connecting rods are alloy steel stamping of I - Section design.

Note: Con rod caps should not be interchanged, since they are matched while boring.

To prepare connecting rods

Remove worn out bearing shells from big end.

Check big end parent bore for taper/ovality.

Check connecting rod bolts for elongation after torque tightening to 80 - 90 lb. ft. If elongation exceeds 0.127 to 0.177 mm replace connecting rod bolt.

Check connecting rod bend and twist in suitable fixture. The bend should not exceed 0.025 mm and the twist should not exceed 0.05 mm.

Fig - 17

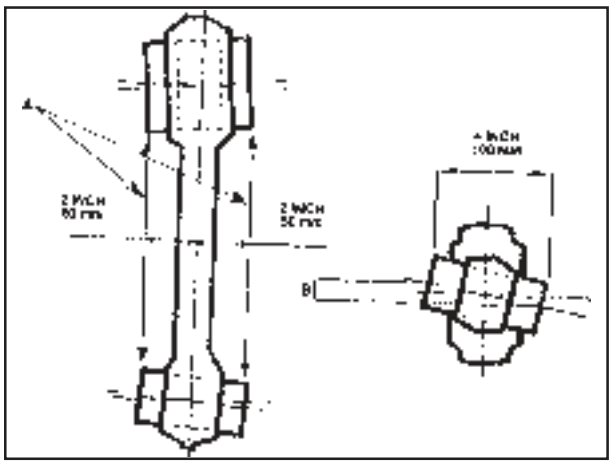

Fig. 17

13.3.3.4 To Remove Gudgeon Pin Bushing and Con Rod Alignments

Using suitable drift press out the worn out gudgeon pin bush from small end of con rod.

Fig - 18

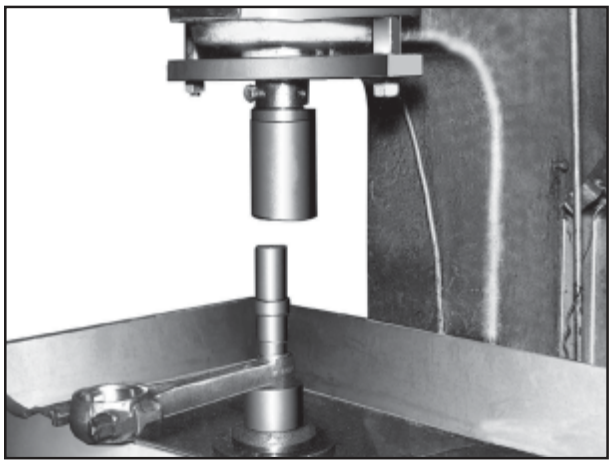

Fig. 18

13.3.3.5 To Assemble Connecting Rod Bushing

Using suitable drift for pressing new connecting rod bush.

Note: If there's a rifle hole, ensure the bush hole to match with the con rod rifle hole.

13.3.3.6 To Renew Connecting Rod Bearing and Check Connecting Rod Main Bearing Crush.

Note: Bearing failure can lead to low oil pressure. The bearing conditions could be ascertained by visual inspection for Scoring / Overheating marks.

Renew the bearings if diameteral clearance of bearings exceeds 0.177 mm.

The bearing crush with respective connecting rod should not exceed 0.101 - 0.152 mm.

End play of connecting rod installed on respective crankpin should not exceed 0.101 - 0.381 mm.

To Check Bearings Crush

Locate the connecting rod and cap bearing shells correctly and fit the cap on respective connecting rod. Ensure that the match numbers stamped on the sides are same and the notch in the con rod and con. rod cap are in the same side.

Fig - 19

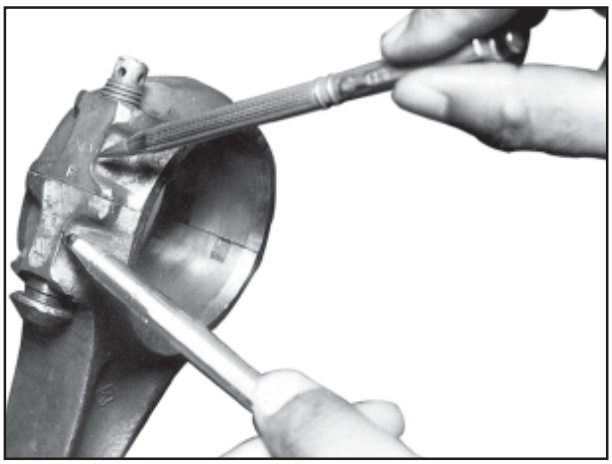

Fig. 19

Tighten the connecting rod bolts to specified torque. Check crush of bearing by loosening bolt opposite to notch side and check gap.

Fig - 20

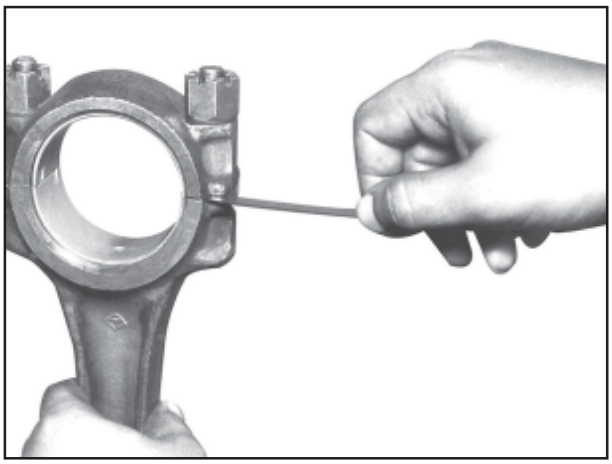

Fig. 20

13.3.3.7 To Check Piston Projection

Note: The measurement of piston projection is required whenever piston change is combined with change of crankcase, connecting rod, crankshaft.

Mount the dial gauge with magnetic base on crankcase and set the dial to zero on head gasket seating surface.

Rotate engine flywheel to bring subject piston to Top Dead Centre using the same dial gauge measure piston projection.

Fig - 21

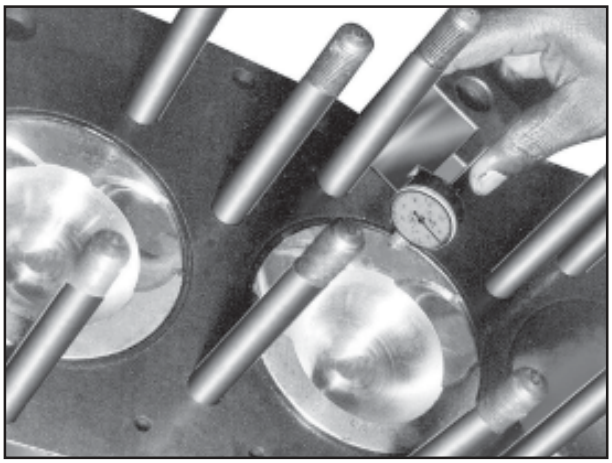

Fig. 21

Piston Projection : 0.40 - 0.65 mm

13.3.4 Crankshaft General

The crankshaft is made of forged steel, supported by seven main bearings and thrust is taken up by thrust washers at the center journal.

The rear end has spring loaded full circle oil seal housed in a aluminum housing and at front end an oil seal is housed in the timing case cover to prevent loss of oil.

At rear end through an adaptor the engine flywheel is bolted. The bolt holes in crankshaft adaptor and flywheel are drilled out of pitch for timing purpose.

Double groove pulley is bolted at front end after match lapping the conical surfaces.

The Timing gear drive is provided from crankshaft through a helical gear pressed before double groove pulley.

13.3.4.0 To Renew Front Crankshaft Sealing

Remove Pulley vibration damper

Remove timing cover & Replace new oil seal.

13.3.4.1 To Renew Rear Crankshaft Sealing / Renew Oil Seal Sleeve

Remove flywheel.

Unlock the locking plates and Unscrew adaptor bolts and withdraw the adaptor.

Unscrew rear oil seal housing bolts and remove oil seal housing. Replace oil seal if found defective. Inspect oil seal sleeve for wear / damage. Extract oil seal sleeve from crankshaft using **Special Tool 0101016 - Extractor Crankshaft Oil Seal Sleeve.**

The **Special Tool 0101016 - Extractor Crankshaft Oil Seal Sleeve** helps in extracting oil seal sleeve without damaging the crankshaft.

Fig - 22

To refit crankshaft rear oil sleeve, heat the sleeve to 190°C to 200°C and insert on crankshaft rear end.

Note: Ensure the tapering end of oil seal sleeve faces the rear end.

Fig - 23

Refit rear oil seal housing & crankshaft adaptor.

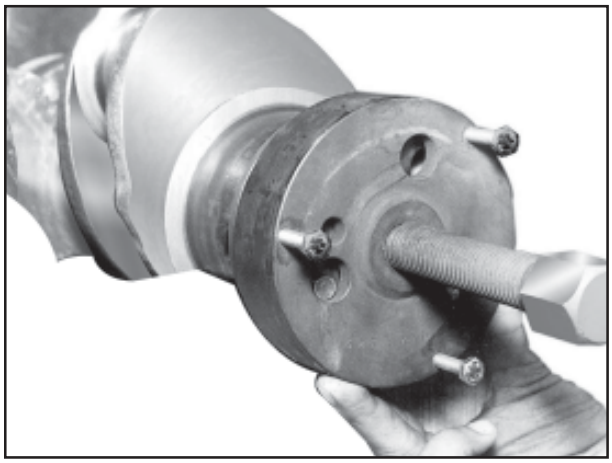

Fig. 22

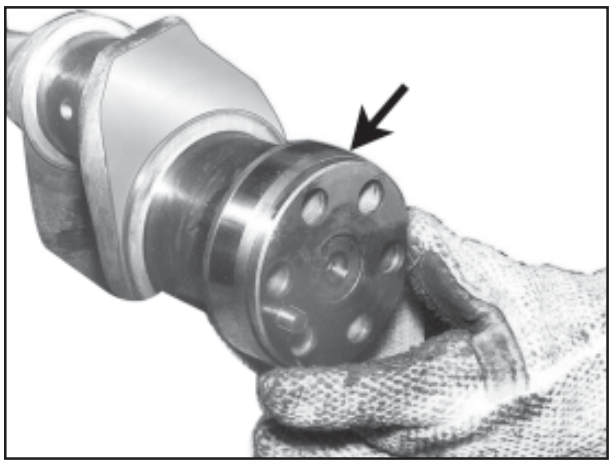

Fig. 23

13.3.4.2 To Remove and Refit Crankshaft

Unscrew collared bolts and remove bearing caps.

Remove thrust bearing cap (centre bearing) last.

Fig - 24

The bearing caps are match marked with the crankcase by A, B, C, D, E, F, G. commencing on the Timing gear side.

Lift the crankshaft out of the crankcase with the aid of the lifting device. Utilise 2 old bearing shells for this purpose as illustrated. Take care not to damage centre bearing.

Fig - 25

Installation

Clean crankshaft thoroughly, ensure lubrication holes are without any dust.

Clean the bearing shell and main journal bore. Fit all the bearings in the respective places.

Lubricate crankshaft journals and bearing shells with engine oil. Carefully lower the crankshaft into position.

Fit bearing caps in its position as per the matching marks. First fit 4th bearing cap and then the first and seventh, then other bearings.

Fig - 26

Tighten collared bolts uniformly, starting from 4th main bearing to a torque of 145 - 155 lb. ft as shown in the sequence order (4, 1, 7, 2, 6, 3, 5).

Fig - 27

After torque tightening rotate crankshaft for freeness.

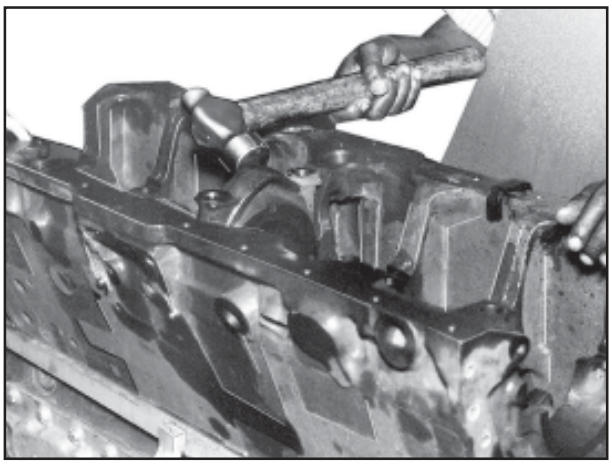

Fig. 24

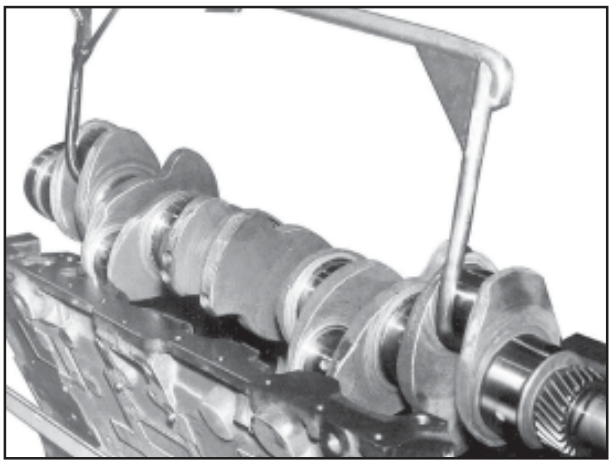

Fig. 25

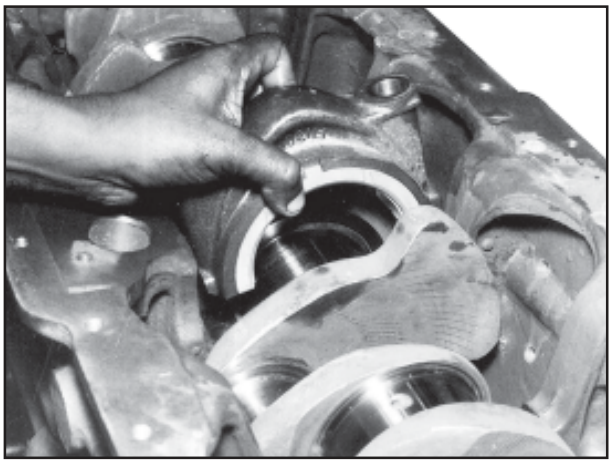

Fig. 26

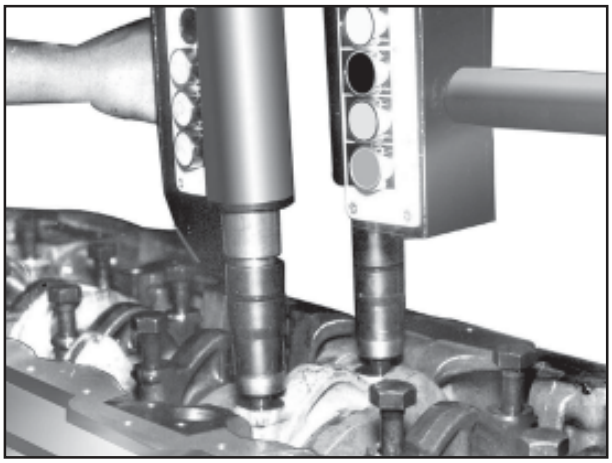

Fig. 27

Do not attempt to rotate crankshaft before all bearing caps have been bolted down and torque tightened. The crankshaft must turn freely without binding i.e. a strong push by hand should make it turn atleast one revolution.

Fig - 28

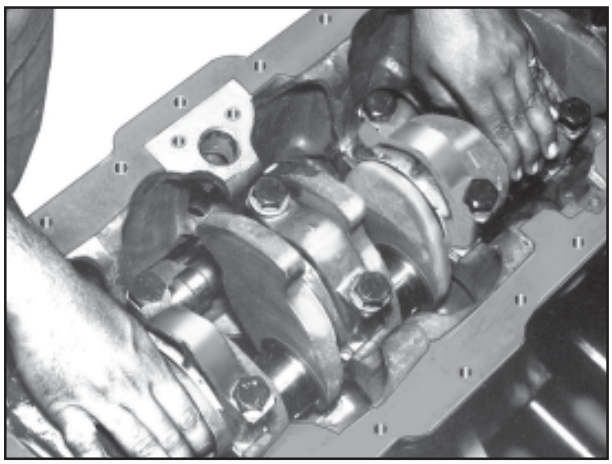

Fig. 28

Check endplay of crankshaft as follows:

Force crankshaft in one axial direction and measure the gap between thrust bearing side and crank web face with dial gauge as shown in Fig - 29.

Subsequently force crankshaft in the other direction and repeat the measurement.

The initial end clearance with new thrust and main bearings should amount to 0.05 - 0.25 mm and end clearance should not exceed 0.35 mm.

Fig - 29

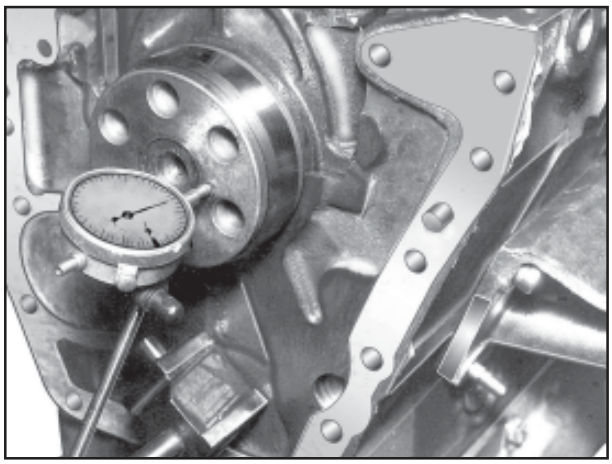

Fig. 29

13.3.4.3 To Check and Grind Crankshaft

Clean crankshaft and blow out lubrication bores with compressed air, check journals and crankpins for cracks.

Recommendation for grinding
(Applicable for AL engines)

1.	Specification of Grinding Wheel (As recommended by Bharat Forge)	:	A 463 L 5 V 10
2.	Speed of rotation of Grinding Wheel for journal Grinding	:	450 to 500 RPM
3.	Speed of Rotation of crankshaft		
	for Grinding	:	50 to 60 RPM
	for Pin Grinding	:	90 to 100 RPM
4.	Range of Automatic Wheel Feed	:	0.0002" to 0.0008"
5.	Recommended Coolant	:	Clearage - AA, Marketed by M/s. Castrol (or its equivalent).
6.	Specification of Tool for grinding oil holes	:	A 12 Mounting wheels having 0.25" dia spindle to be used on a Dia Grinder, Model CP 3050 manufactured by M/s. CPT, Mumbai - Speed : 21,000 RPM.

Points to be observed while Regrinding:

1. Crack detect the Crankshaft before & after grinding.
2. The Grinding wheel should be brought slowly and should touch the crankshaft gently.
3. During final cut, 30 to 40 sec. Period should be allowed for dwelling.
4. If the run out of the Crankshaft is excess, it should be renitrided irrespective of the undersize.

Regrinding of Crankshafts
(applicable for AL material engines)

While grinding, care should be taken to ensure an excessive amount of material is not removed from the fillets.

The fillet radius of the main and con rod Journals of the crankshaft is 0.14" to 0.16". The enclosed figure on crankshaft regrinds indicates the effect of an S1 regrind using wheel with radius of 0.14" to 0.17". It is divided up into eight sections each one indicating a certain condition.

Examples:

At (3) this indicates the effect of a 0.17" radius wheel used in a crankpin fillet radius of 0.14". Likewise at (7) this is a 0.17" radius wheel in a crankpin fillet radius of 0.16" and so on. The important factor is that the hardened case is not ground through in the fillet and the case is not breached. Therefore case No.2 is in order, but conditions 6 and 8 are not, only occuring when the radius of the grinding wheel is less than that of the crank fillet. When the wheel has a greater radius, a line may be formed in the fillet as in conditions 1,3 and 4 but this is not normally detrimental. Hence, generalising, a grinding, wheel of radius equal to or 0.010" above crankshaft fillet radius should be used.

With regard to the polishing operation, this is done to remove nitriding bloom and attain a surface finish. The correct surface finish should be 10 micro inches and if attained by grinding, then polishing is not required.

The hardness of the journals required should not be less than 75 on the skeleroscope scale and at on regrind to S1 size, this hardness should be retained. However, this should be inspected after a regrind and rectified as necessary.

Line is produced in fillet radii during re-grind to S1. This occurs when crank was ground to bottom limit on radii originally. Line occurs at points A. B. & C. as shown by arrow.

Fig - 30

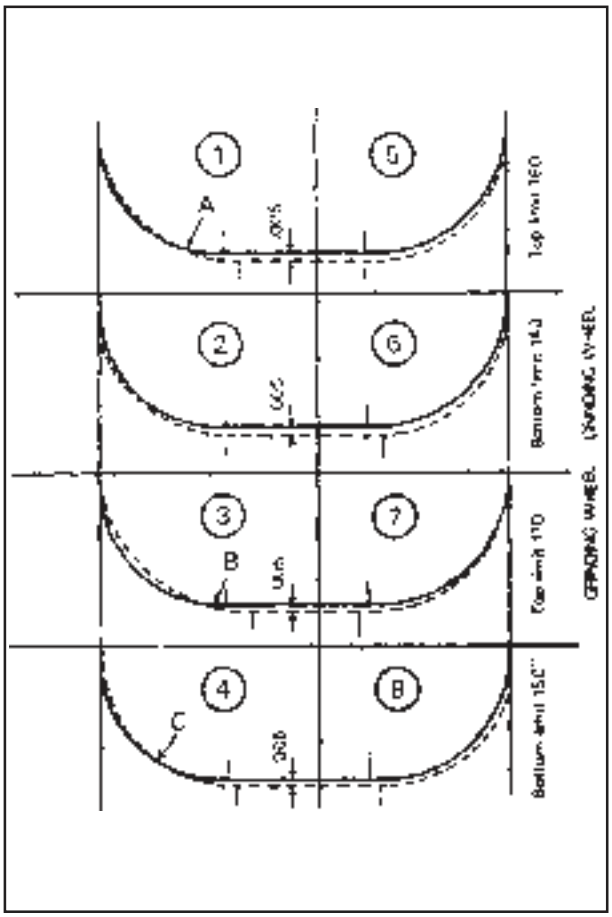

Fig. 30

TABLE OF CRANKSHAFT DIMENSIONS

Type	Crankpin Diameter		Crankpin Width		Journal Diameter		Journal Width							
							Front		Centre		Rear		Others	
	in	mm	in	mm	in	mm	in	mm	in	mm	in	mm	in	mm
Std.	2.3998	60.955	1.700	43.180	3.4998	88.895	1.845	46.863	1.950	49.530	1.947	49.454	1.395	35.433
Service	2.4005	60.973	1.703	43.256	3.5005	88.913	1.855	47.117	1.952	49.581	1.955	49.657	1.405	35.687
lst	2.3898	60.701	1.700	43.180	3.4898	88.641	1.845	46.863	1.950	49.530	1.947	49.454	1.395	35.433
Service	2.3905	60.719	1.703	43.256	3.4905	88.659	1.855	47.117	1.952	49.581	1.955	49.657	1.405	35.687
2nd	2.3798	60.451	1.700	43.180	3.4798	88.387	1.845	46.863	1.950	49.530	1.947	49.454	1.395	35.433
Service	2.3805	60.461	1.703	43.256	3.4605	88.151	1.855	47.117	1.952	49.581	1.955	49.657	1.405	35.687
3rd	2.3698	60.193	1.700	43.180	3.4698	88.133	1.845	46.863	1.950	49.530	1.947	49.454	1.395	35.433
Service	2.3705	60.211	1.703	43.256	3.4705	88.151	1.855	47.117	1.952	49.581	1.955	49.657	1.405	35.687
4th	2.3598	59.939	1.700	43.180	3.4598	87.879	1.845	46.863	1.950	49.530	1.947	49.454	1.395	35.433
Service	2.3605	59.957	1.703	43.256	3.4605	87.897	1.855	47.117	1.952	49.581	1.955	49.657	1.405	35.687
5th	2.3498	59.685	1.700	43.180	3.4498	87.625	1.845	46.863	1.950	49.530	1.947	49.454	1.395	35.433
Service	2.3505	59.703	1.703	43.256	3.4505	87.643	1.855	47.117	1.952	49.581	1.955	49.657	1.405	35.687

Note 1: When grinding crankpin and journals the sides must not be ground unless they have been damaged if the location faces of the centre main bearing have been damaged, the vvidth should be Increased to 49.784, 49.835 mm otherwise the dimension, should remain unchanged.

Wheel having a radius of 3.810 / 4.318 mm must be used.

Note 2: The crankshaft should be re-nitrided at service sizes S.2 and S.4

Note: The crank shafts with visible cracks at radius or oil hole area need to be abandoned from any further usage. The cracks could be traced using magnetic particle crack detection.

Defects in crankshafts displayed by magnetic testing

Regions shown thus ////// indicate one half of semi-circle at any fillet between crankpins and webs or journals and Webs. Within these areas, or within a radius of 0.25" of the centre of an oil hole, crankshafts shall be rejected if inspection discloses.

a) Any defect visible to naked eye, or by the aid of x 10 magnifying glass.

b) Thread like deposits of magnetic powder exceeding 0.10" in length.

Fig - 31

Surface cracks must be ground out to with in the 0.010" dia, undersize dimension; otherwise it will mean that the crankshaft should be ground further in steps of 0.010" undersize on diameter until shaft cleans up. This in turn means that the crankshaft will have to be re-nitrided before it is reused.

The overheating marks have to be removed fully by grinding down to the possible service size. The depth of material removed will determine the loss of nitriding case depth and the decision to subject the crank shaft for re-nitriding.

13.3.4.4 To Renew Crankshaft Gear

By using **Special Tool 0101008 - Extractor Crank Shaft Gear,** remove crankshaft gear from crankshaft. Eliminate high spots, nicks and chippings from pulley key by filing before re using.

Fig - 32

13.3.4.5 To Renew Crankshaft Main Bearing and Check Main Bearing Crush

Locate the new main bearing shells correctly on the crankcase and fit the cap on respective location by matching punch marks i.e A, B, C, D, E, F, G,. Ensure the notch in the crankcase and main bearing cap are in the same side. Tighten the main bearing cap bolts to specified torque.

To Check crush (0.101 - 0.152 mm) of bearing loosen the bolt opposite to notch side and check the gap using feeler gauge.

Fig - 33

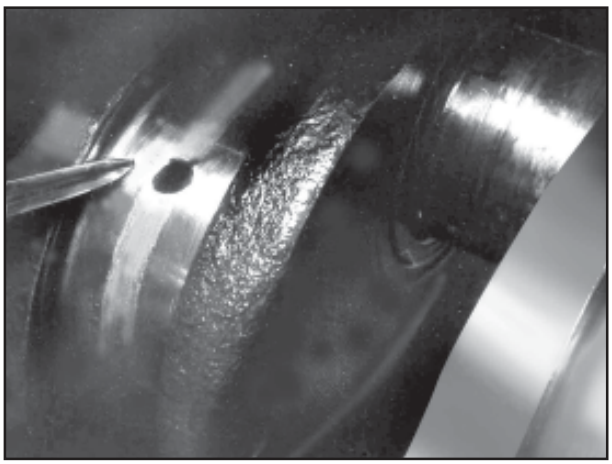

Fig. 31

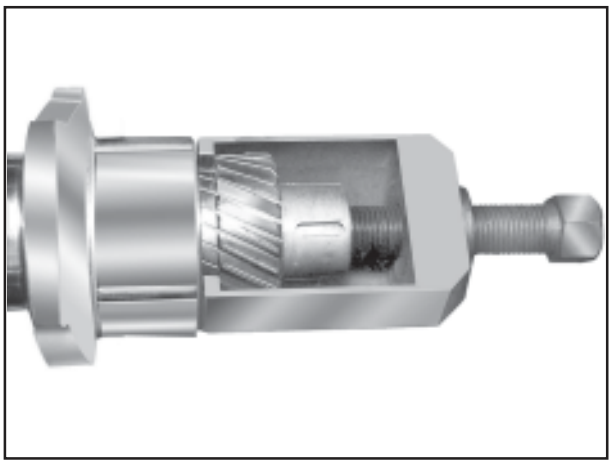

Fig. 32

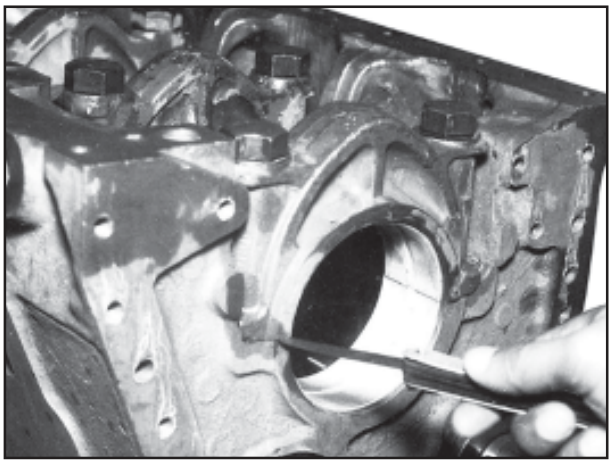

Fig. 33

13.4 CYLINDER HEAD AND VALVES

13.4.0 To Remove and Refit Cylinder Head Sub-assembly

Remove cylinder head cover and remove rocker gear assembly. Unscrew cylinder head nuts, and lift off the cylinder head. Place ends of cylinder head onto the wooden blocks.

Fig - 1

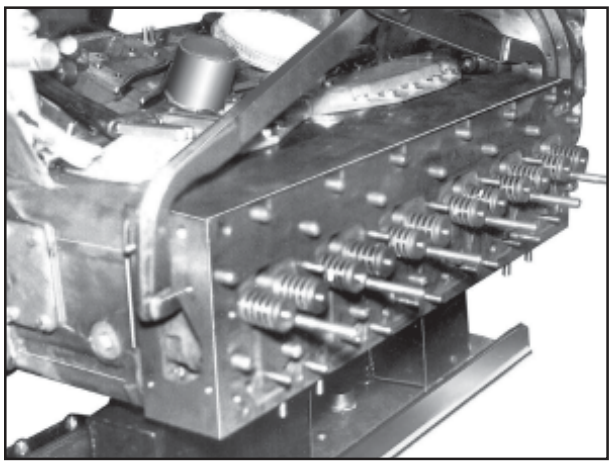

Fig. 1

Cylinder head nut loosening sequence.

Fig - 2

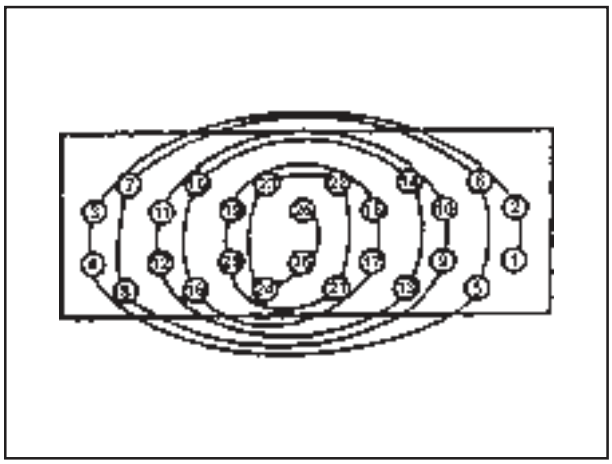

Fig. 2

13.4.0.0 Cylinder Head Pressure Testing

Place the cylinder head on dry flat surface. Fix dummy plates on cylinder head parting surface as well as front and rear covers with thick rubber gasket material.

Fig - 3

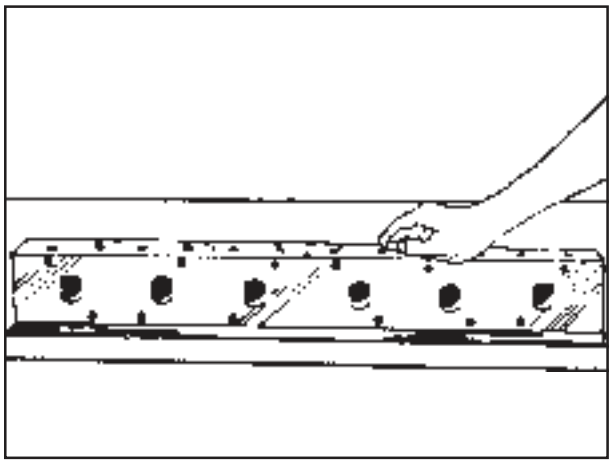

Fig. 3

Connect pressurised water supply to the cylinder head water jackets (2.1 kg/cm²). Inspect water leakage from oil cross hole.

Pressure test oil holes with 5.6 kg/cm² by closing both the ends and pressurising with water.

Fig - 4

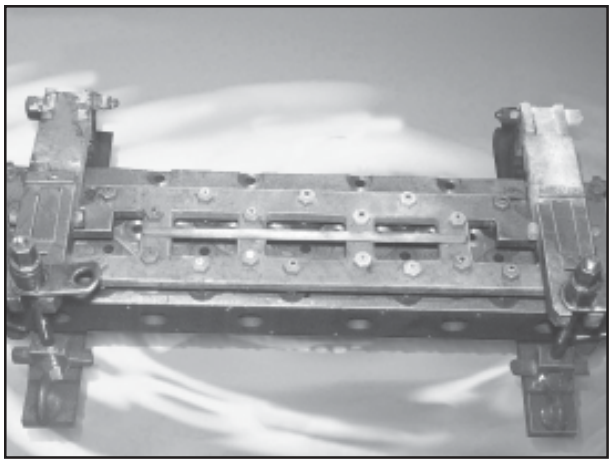

Fig. 4

13.4.0.1 Cylinder Head Surface Regrinding

/ Valve guides, valve seats and studs removed /

Machining Data

Permissible unevenness	0.076 mm
Original height	96.469 - 96.571 mm
Minimum height after refacing	96.01 mm

Note: Ensure after grinding the minimum cylinder head height, valve seat counter bore depth.

Check for surface cracks, blow holes near core plugs.

Installation

Use only genuine cylinder head gasket.

Fig - 5

Clean contact faces of cylinder head and crankcase. Place cylinder head gasket "TOP" mark facing upward.

Mount cylinder head and tighten the nuts in sequence from centre.

Fig - 6

Tighten the cylinder head nuts moderately and then torque tighten to 125 - 130 lb. ft.

Fig - 7

NOTE: After the initial warming up of the engine, the cylinder head bolts must be retightened to the specified torque. The rocker shaft assemblies need to be removed for this purpose.

Readjust valve clearance as per recommendation.

13.4.0.2 To Remove and Refit Valve

Remove valve spring seats and valve spring and withdraw the valve from its guide.

13.4.1 To Remove Valve Springs

Note: Valve springs can be replaced without removing cylinder head by bringing respective piston to Top Dead Centre.

Remove the valve split cones, and valve spring from cylinder head.

Special Tool 0101010 - Compressor Valve Spring.

Fig - 8

Remove the intake and exhaust valves.

Tag valves to identify their cylinder numbers and to eliminate mixing up of valves.

Caution: Avoid damage to cylinder head surface.

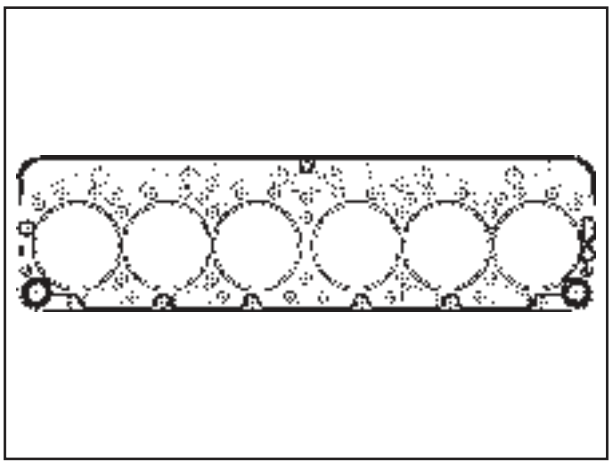

Fig. 5

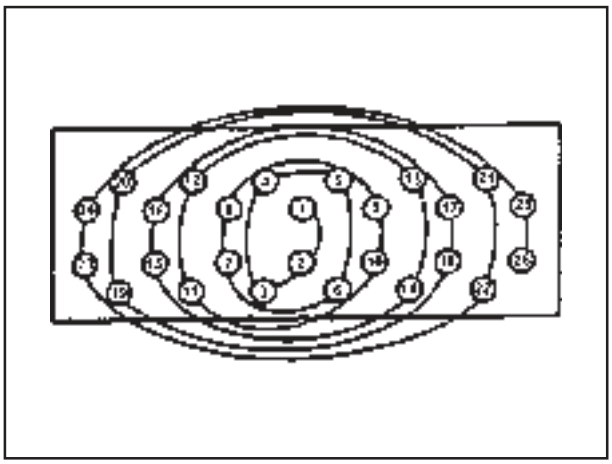

Fig. 6

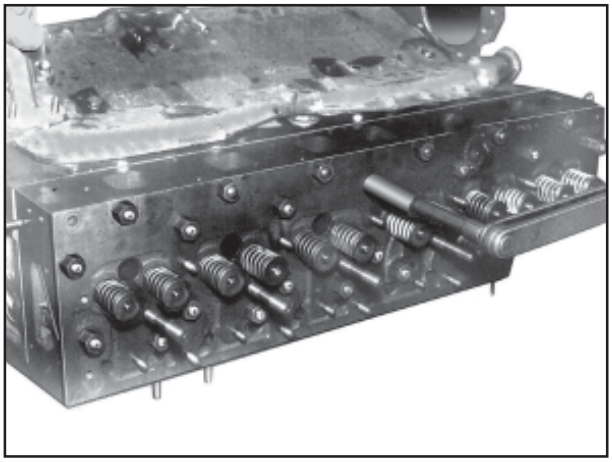

Fig. 7

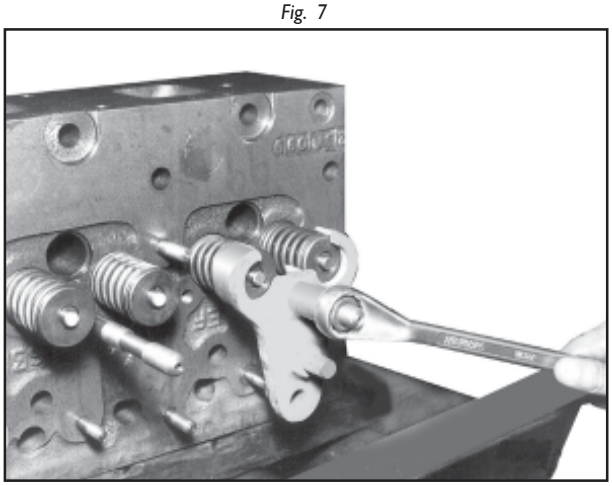

Fig. 8

13.4.2 To Hand-lap Valve and Valve Seat

Lightly apply lapping compound to the valve face. Install the valve with a Valve Lapping Tool, tap and rotate valve against the seat.

Fig - 9

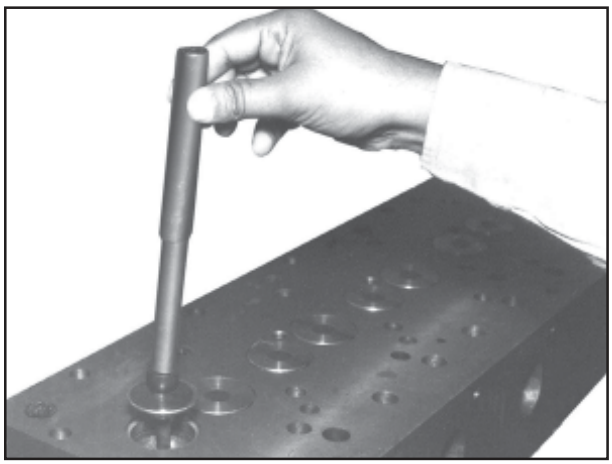

Fig. 9

13.4.3 To Grind Valves and Valve Seats

Note: Grinding of valves and valve seats should only be performed when hand lapping does not result in proper seating. Any conventional valve grinding machine can be used.

Fig - 10

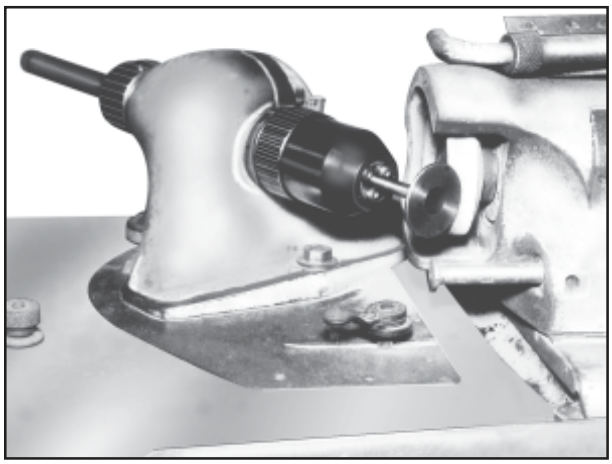

Fig. 10

13.4.4 To Refit Valve Seat and To Check and Reface Valve Seat

Cut the circumference of a old valve head at three places with a grinder and install it into the seat and weld the valve to the seat. Then drive the valve and the seat out with a mallet.

Valve seat installation

Heat the cylinder head to about 80° - 100°C with hot water. On the other hand, cool the valve seat with dry ice or liquid nitrogen for about 30 minutes. Hold the seat with pincers and place it into the heated cylinder head. Use **Special Tool 0101004 - Pilot and Drift Valve Seat Inlet** and **Special Tool 0101005 - Pilot and Drift Valve Seat Exhaust** for fixing valve seats.

Fig - 11

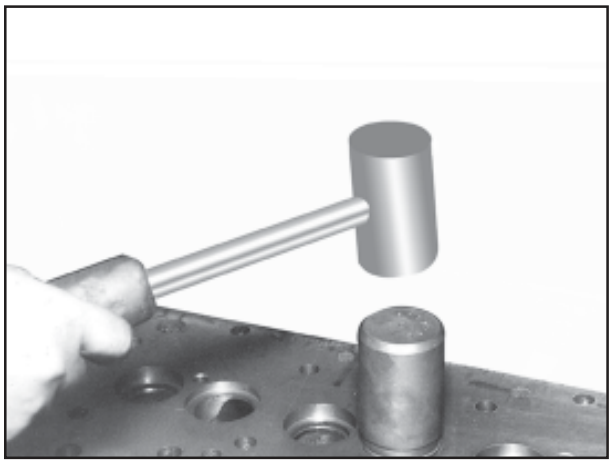

Fig. 11

Refer section 13.4.2 and 13.4.3 for valve seat lapping/grinding.

Check sealing between valve and valve seat.

13.4.5 To Refit Valve Guide.

The Valve guide may require replacement if stem to valve guide clearance exceeds

13.4.5.0 To Renew Valve Guide

Remove the valve stem seal.

Using a brass rod and hammer, drive out the valve guide.

Install the new valve guide using Special Tool.

Fig - 12

Height of the valve guide from cylinder head surface - 15.48 mm.

Fig - 13

Note: Apply engine oil lightly to the valve guide outer circumference before installation. Wherever deep-freezing facilities available, freeze the valve guides to -10°C to -14°C.

13.4.6 To Refit Valve Stem Seal

Remove the valve stem seal.

Fig - 14

Install the valve stem seal using Special Tool.

First, install the lower spring seat (for stopper of special tool) and valve. Then apply engine oil to the lip of the stem seal and drive the special tool until it hits the lower spring seat.

Fig - 15

Note : After installing stem seal, make sure that a check is made on the condition of the rubber seal for cracks or any other damage. Do not use the special tool if its tip (surface contacting lower spring seat) is worn or deformed.

13.4.7 To Check Valve Springs

Check valve springs on a valve spring scale for re-usability

Fig - 16

When pressing valve springs take special care to avoid damaging stem seals.

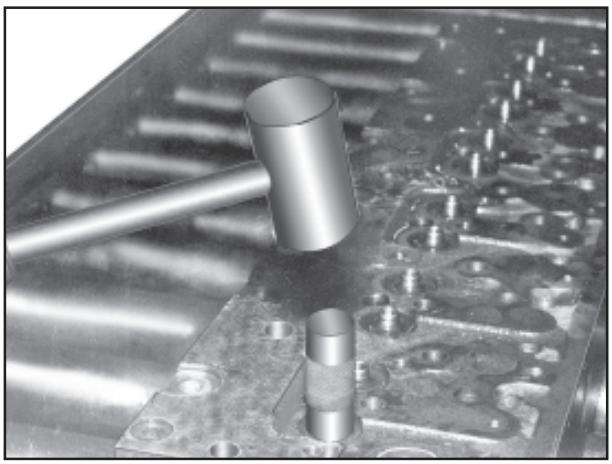

Fig. 12

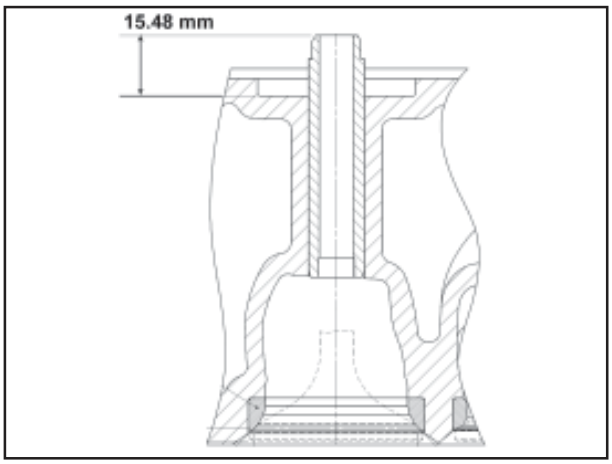

Fig. 13

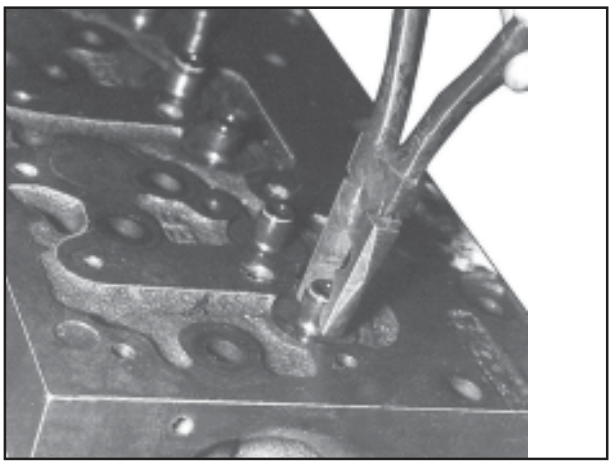

Fig. 14

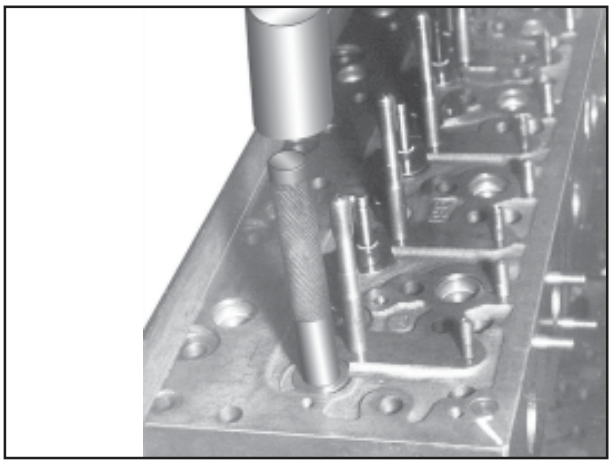

Fig. 15

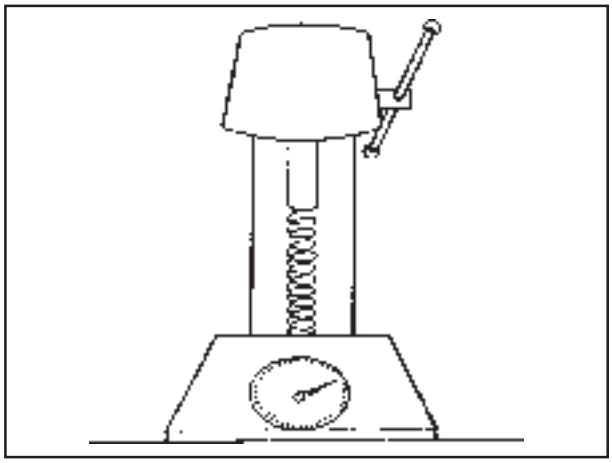

Fig. 16

13.5 TIMING

13.5.0 To Remove and Refit Rocker Levers

Rocker lever - modified to increase rocker ratio.

Fig - 1

Remove cylinder head cover.

Remove Injector clamp and fasteners, remove rocker shaft assembly and remove the circlips at either ends to dismantle the rocker arm subassembly.

Fig - 2

Reassemble rocker arm assembly in the order as follows:-

Washer, Exhaust lever, bracket, inlet lever, washer, spring - for first three cylinders

Washer, Inlet lever, bracket, exhaust lever, washer, spring - for last three cylinders

Fig - 3

Note: Confirm that oil hole of rocker arm bracket No.3 Support aligns with shaft oil hole. This is ensured by locking second rocker bracket with respect to rocker shaft by means of a pin.

Caution: Improper installation will result in seizure of the entire valve assembly.

13.5.0.1 To Remove and Refit Rocker Lever Bush.

Using suitable drift drive out the worn out bush.

Use suitable mechanical or hydraulic press for pressing new rocker lever bush. Drill two nos. holes using 2 mm drill-bit for lubrication.

Fig - 4

Fig. 1

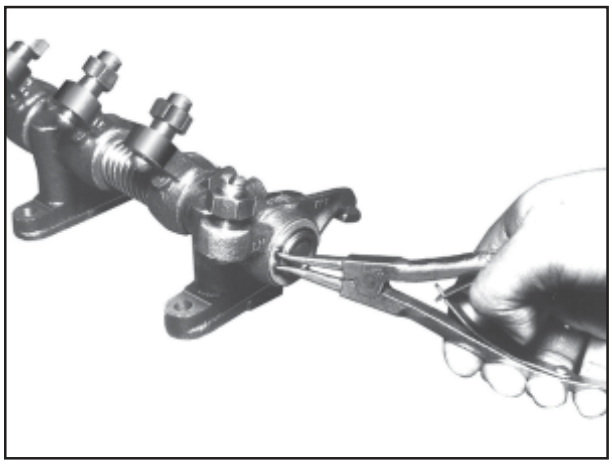

Fig. 2

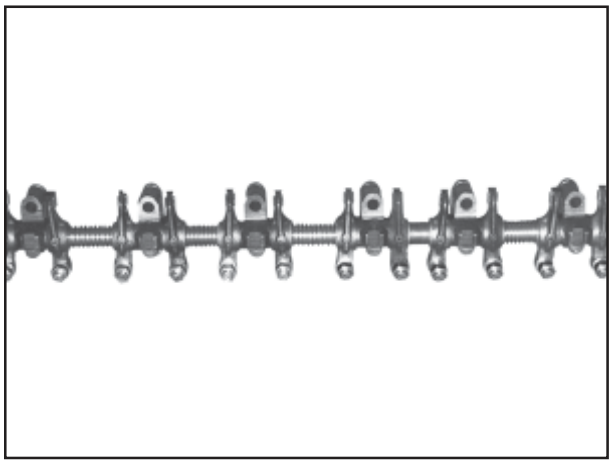

Fig. 3

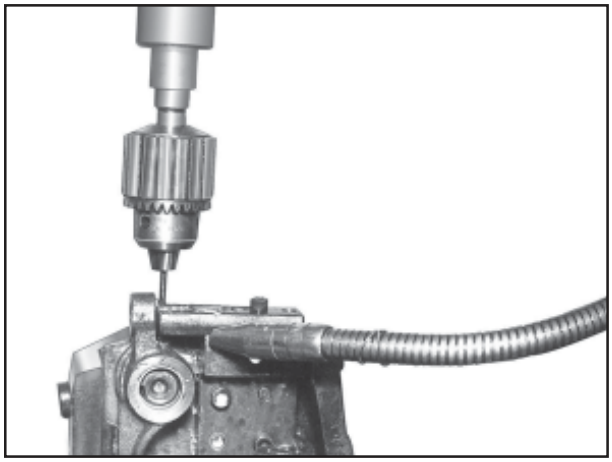

Fig. 4

13.5.1 To Remove and Refit Push Rod and Tappets.

Remove rocker gear and withdraw push rods.

Check push rods bend between centres.

Maximum permissible bend = 0.3 mm

Examine both push rod ends for wear. Replace if necessary and check rocker gear and tappet lubrication in this case.

Fig - 5

Remove the engine RH side covers.

Check diametral clearance of tappet in crankcase bore and inspect sliding surface and push rod seat for wear.

Data

Tappet plunger clearance in engine block	0.057/0.083 mm
Max. permissible diametral clearance	0.127 mm

Renew worn parts. To refit push rods and tappets, reverse the procedure for removal.

13.5.2 To Remove and Refit Camshaft.

Unscrew 4 nos set screws holding camshaft thrust washer and shims. With draw camshaft from front end.

Fig - 6

Extract camshaft after removing tappets.

Use special tool Drift and Extractor camshaft bushes to remove and refit camshaft bushes.

To refit camshaft reverse the procedure for removal.

Note: **Use Special Tool 0101014 - Centraliser Cam Shaft Thrust Washer** for centralising cam shaft thrust washer before tightening setscrews. Set end play of camshaft by adjusting shims to 0.101 - 0.203 mm.

Fig - 7

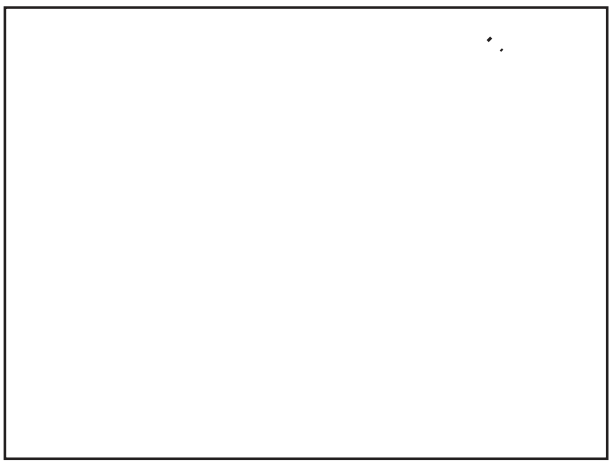

Fig. 5

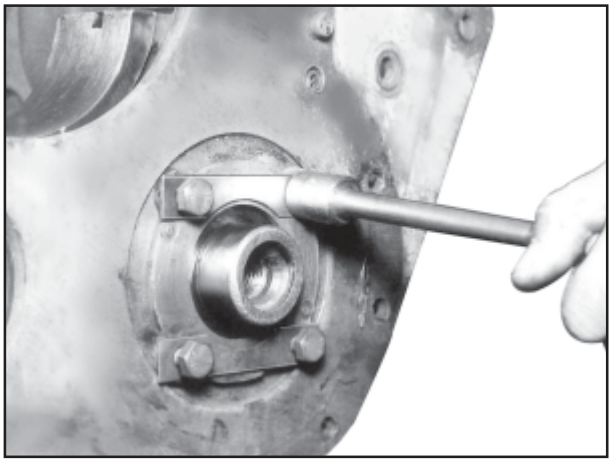

Fig. 6

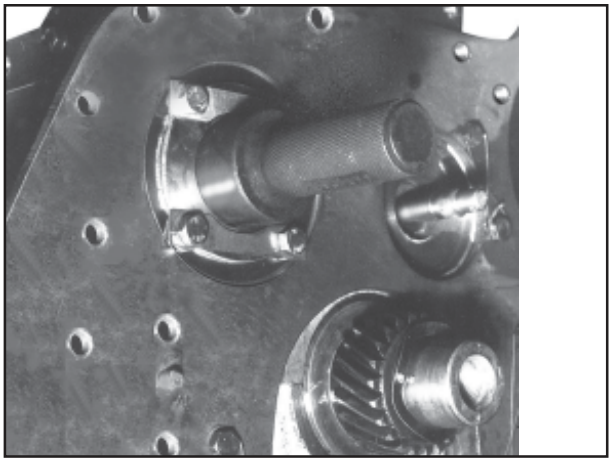

Fig. 7

13.5.3 To Remove, Refit Idler Gear and Valve Timing

Rotate engine until match marks of camshaft gear and timing backplate punch mark to align.

Fig - 8

Unscrew Idler gears nut and remove it with thrust washer, withdraw intermediate gear.

Fig - 9

To refit spindle Idler gear, reverse the procedure for removal. The idler gear bush is floating type.

Seating faces of spindle must be perfectly clean. Install intermediate gear taking care of the match marks, for timing.

Retighten the idler gear castle nut to specified torque (65 - 75 lb. ft.), lock the nut using new split pin.

13.5.4 To Position Timing Gears for Valve Timing

Align 1/6 mark on engine flywheel with flywheel pointer by rotating the engine.

Align camshaft gear timing mark with reference punch mark on timing back plate.

Fix idler gear along with spindle on idler bolt without changing the position of camshaft/crankshaft gear.

Fig - 10

Proposed Valve timing Arrangment

No. 1, 2, 3 punched on gears to align timing marks as shown in figure.

Fig - 11

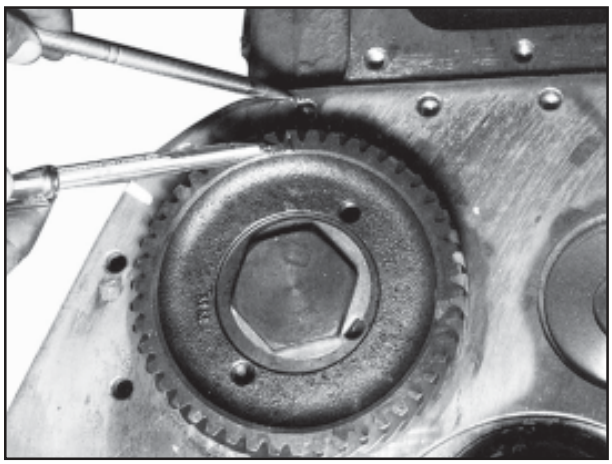

Fig. 8

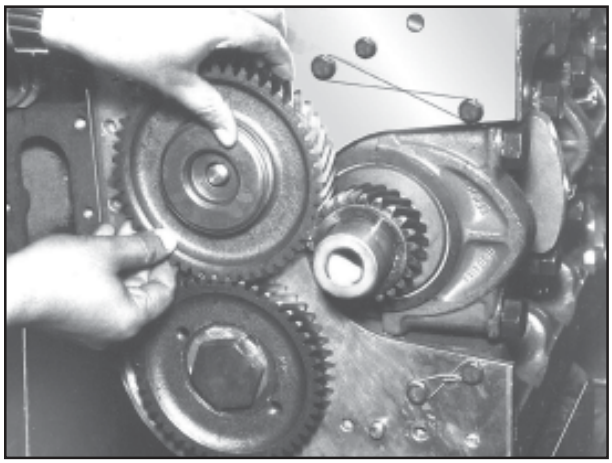

Fig. 9

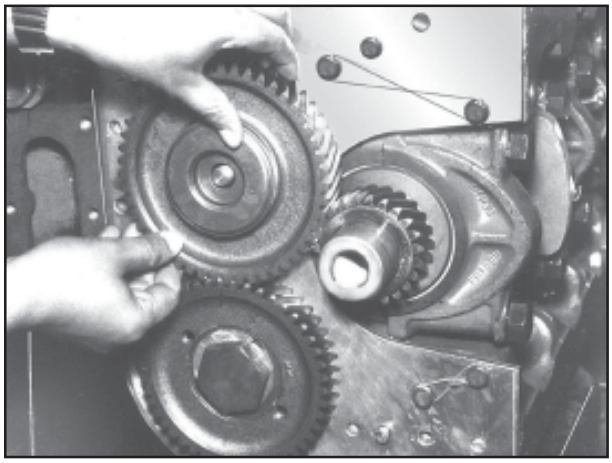

Fig. 10

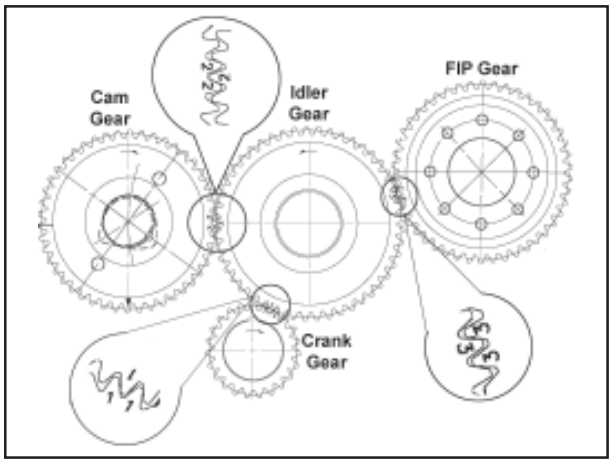

Fig. 11

13.5.5 Timing Gear Backlash Checking

Check tooth backlash with feeler gauge.

Permissible backlash between each pair of gears 0.102 to 0.152 mm.

Fig - 12

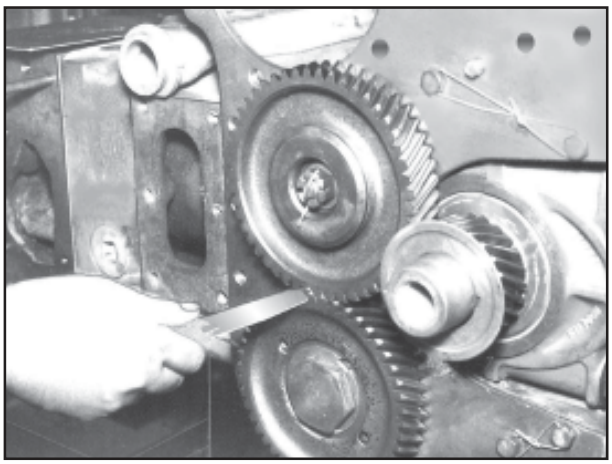

Fig. 12

13.5.6 To Adjust the Valve Clearance

Method for determining if the No. 1 or No.6 piston is at the Top Dead Center on compression stroke.

* Turning the crankshaft, align the mark "1-6" on the flywheel pointer on the flywheel housing.
* In this position either the No. 1 or No. 6 piston is at the top dead center on compression stroke.

If both No. 1 intake and exhaust rocker arms can be moved easily by hand, the No. 1 piston is at top dead center on compression stroke.

With the No. 1 piston positioned at top dead center on compression stroke, adjust the No. 1 valve clearance using a feeler gauge.

The feeler gauge should move with a very slight pull.

To adjust the valve clearance for the other cylinder valves, by turning the crankshaft clockwise 120° (viewed from the front side). Adjust the valve clearance for each cylinder as per firing order 1-5-3-6-2-4. **Fig - 13, 14 & 15.**

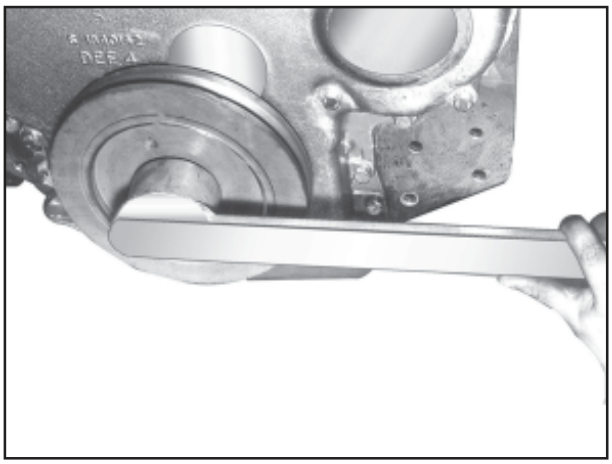

Fig. 13

Quick checking method

To save time the following method can be practiced.

Step 1: Rotate engine in clockwise direction till flywheel 1/6 mark aligns with flywheel pointer.

Step 2: If 3rd rocker lever from the front end of the engine on rocker assembly is fully actuated downward i.e. when the third valve is fully open, start setting valve clearance for 1st, 2nd, 4th, 5th, 7th, 10th valves from frontend.

If 10th rocker lever of engine on rocker assembly is fully actuated downward i.e. when 10th valve is fully open, start setting valve clearance for 12th, 11th, 9th, 8th, 6th, 3rd valves from rear end.

Step 3: Rotate engine clockwise 360° to realign 1/6 mark and repeat step 2 suitably to complete valve clearance setting for all 12 valves.

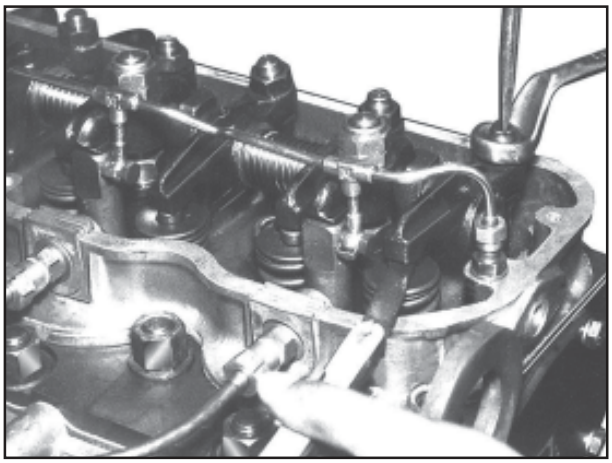

Fig. 14

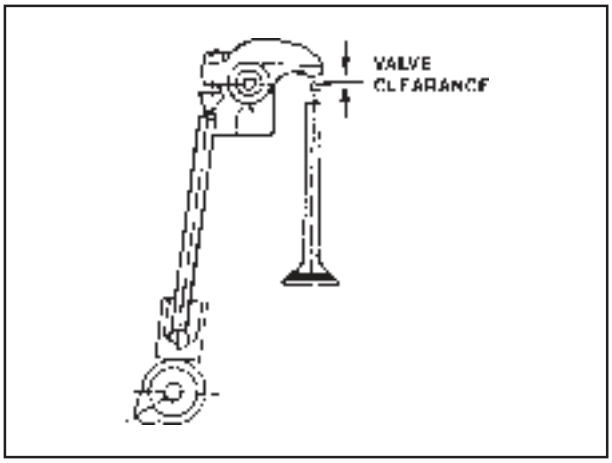

Fig. 15

13.5.7 To Refit the Fuel Injection Pump and adjusting the Fuel Injection Timing

A. Removal of FIP from Engine:

1. Isolate battery.
2. Remove high pressure pipe connections, remove over flow pipe and boost compensator pipe (black colour nylon hose).
3. Loosen the 3 nuts mounting the FIP onto the injection pump drive housing, and remove the FIP. There is no need to remove the injection pump drive housing.

Caution: After removal ensure that the Over flow Banjo (marked as 'OUT') and the LDA connection banjo if fitted back to the respective FIP. These are not to be interchanged and will be required for Bench calibration also.

B. Bench Calibration:

1. Remove the splined bush by a suitable tool.

   The FIP can now be put on bench for calibration.
2. After bench calibration, fix the splined bush and torque tighten to the specified value.
3. Set the specified pre-stroke value by using dial indicator and cam lock.
4. The FIP is now ready for fitment onto the engine.
5. Ensure that the inlet adaptor on the FIP fuel inlet, Overflow ('OUT') Banjo and the LDA Banjos are fitted back onto the FIP after bench calibration.

Note: For Calibration chart refer MICO dealer.

C. To Refit the Fuel Injection Pump and adjusting the Fuel Injection Timing

1. Bring the no.1 cylinder at TDC on compression stroke. **Fig - 17** (Hint: there is no need to remove the rocker cover. At the first cylinder compression the double groove in the Inj. Pump drive coupling, which can be felt with hand from the open end rear end of the Inj. Pump drive housing, will be vertical).
2. Check the FIP mounting Gasket.
3. Fit the FIP onto the engine aligning the double tooth with the double groove in the injection pump drive coupling (Hint: at the correct timing the double tooth on the splined bush would be vertical) and cam locked condition.
4. Tighten the 3 FIP mounting nuts, by pushing the pump towards cylinder block. **Fig - 18**
5. Loosen the cam-lock, insert the interposing plate under the camlock screw and tighten the cam-lock screw again. (To make the drive shaft free).

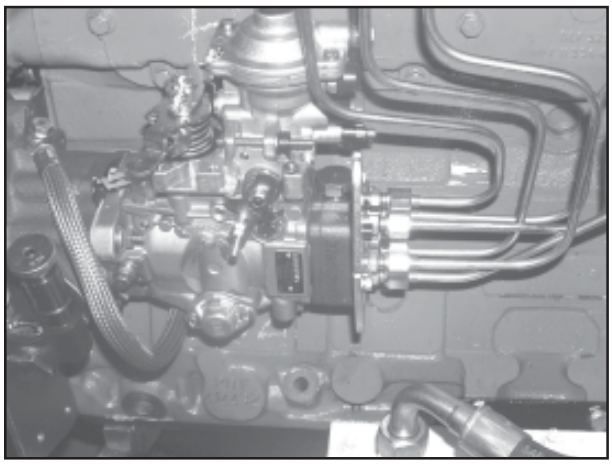

Fig. 16

Fig. 17

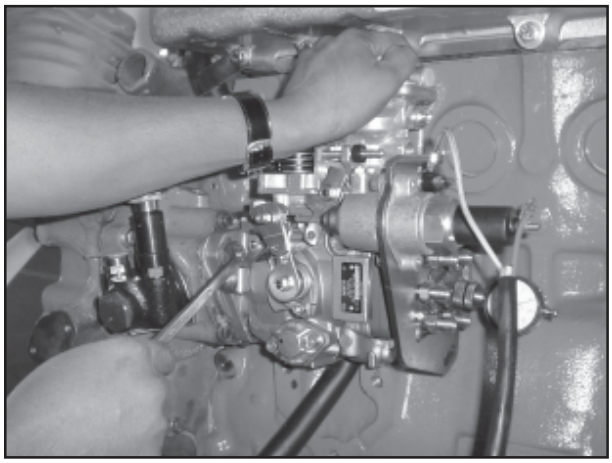

Fig. 18

Check and Setting Injection Timing

1. Remove the dummy plug on the distributor head and fix the special tool. **Fig - 19 & 20**

2. Rotate the engine in the opposite direction of rotation. Stop the rotation when the pointer of the dial indicator stops moving.

3. Set Zero on the dial. **Fig - 21**

4. Rotate the engine in the direction of rotation and align the 1/6 mark on the engine flywheel to the flywheel housing ref.

5. The dial indicator should now read pre-stroke specified for the engine type.

6. If not, loosen the three nuts holding the FIP to the housing-inj. Pump drive and turn the FIP towards or away from the engine so that the dial reads the required pre-stroke value.

7. Tighten the three nuts to secure the FIP firmly.

8. Remove the dial indicator and fit the dummy plug.

9. Fit the Over flow pipe, boost compensator pipe, high pressure pipes and FIP support bracket.

FIP Timing Setting Tool

FIP rear end dummy plug sizes are M8 and M10.

Use special tool part no.

Small Tool - M8 - Z00WEO203193

M10 - Z00WEO230528

for checking timing without high pressure pipes. **Fig - 22**

Use special tool part no.

Long Tool - M8 - Z00ZZ0031450

M10 - Z00ZZ0031604

for checking timing with just loosening the high pressure pipes at injector end. **Fig - 23.**

Supplier Address:
Productive Tool Engineers,
No. 251 1st Main, 7th Cross,
New 3rd Cross, Prakash Nagar,
Bangalore - 560 021.
Ph : 080-3124606.

Fig. 19

Fig. 20

Fig. 21

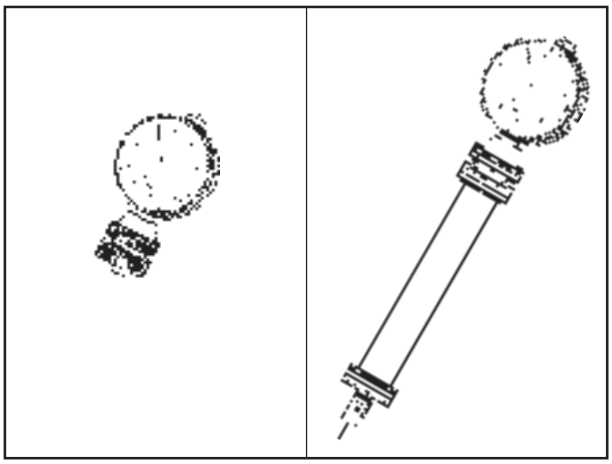

Fig. 22 *Fig. 23*

13.5.8 To Assemble FIP Drive Coupling (Fig - 24)

Assemble the bushes (2) on to the injection pump drive housing (1).

Pump drive shaft (3) is assembled alongwith a thrust washer (4) into the housing (1).

Feeler shim inseration - drive shaft play on the housing is 0.1 mm.

Fig - 25

Eccentric (5) is press fit on to the drive shaft (3) and retainer circlip (6) is fitted.

The IPD coupling (7) is assembled into the drive shaft (3).

Circlip (12) is fitted into the IPD.

FIP gear (8) is fitted onto the drive shaft (3) and retained with 8 bolt (9).

The end cover (11) with O ring (10) is fitted.

Feed pump is fitted on the drive on the injection pump drive housing.

FIP is assembled with splined bush on to the FIP drive coupling.

Note: For derated pump, use splined push punched "6D".
For nominal pump use splined bush punched "6N"

Fig - 26

13.5.9 To Fit Injector High Pressure Pipes

The fuel outlet at distributor head of the FIP would be identified with alphabets A-B-C-D-E-F as shown in **Fig. 27**

The fuel outlet on the pump corresponding to each Engine cylinder is given in the table below:

Connection Sequence

On Cap nut at Injector end	1	2	3	4	5	6
On Cap nut at pump end	A	E	C	F	B	D

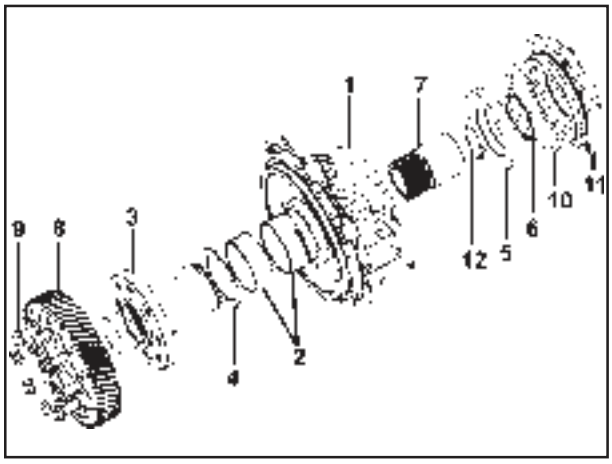

Fig. 24

Fig. 25

Identification for FIP Splined Bush

Part No.	ID Mark	Application
X1600315	6D	Derated
X1600415	6N	Nominal

Fig. 26

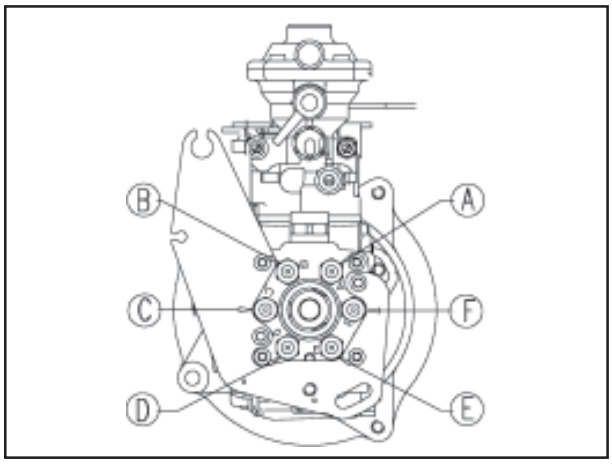

Fig. 27

13.5.10 Fuel Filters

Effective fuel filtration is absolutely essential for trouble free operation of the fuel injection equipment. Fuel filters have been designed to retain even the smallest of the impurities and protect the extremely sensitive precision parts of the injection pump and nozzle from damage.

Note: Do not use star type filter inserts. Always use coil type fuel filter. **Fig - 28**

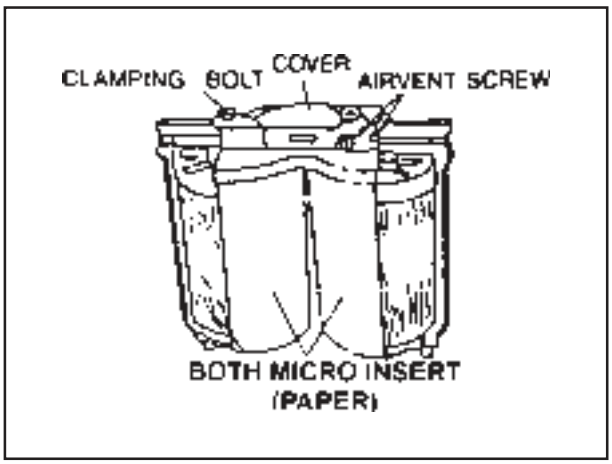

Fig. 28

Maintenance

Filter inserts must be replaced at regular intervals. Guidelines for replacement period under normal conditions are given below.

Filter Change Period (Both Paper Coil Type)

First stage element	First 16000 km and thereafter every 16000 km
Second stage element	First 24000 km and thereafter every 16000 km

Note: Never change both the filters at a same time.

The filter elements (inserts) should never be cleaned, at an interval lesser than the recommended period. Sometimes the filter inserts get clogged in a very short time due to asphaltene or waxy compounds present in fuel. In such cases the filter inserts have to be replaced.

Renew Fuel Filter Element

- Unscrew centre bolt and withdraw the bowl and filter, Install new sealing ring and ensure it is correctly located.
- Clean the bowl free of sediments. Replace a genuine filter element and refit the bowl.

Bleed the fuel system

While bleeding the fuel system bleed the fuel through the high pressure injector pipes upto the injector end. It is necessary to crank the engine intermediately.

Note: Do not disturb FIP for bleeding.
While loosening the injector pipe nut at the injector end for bleeding. Hold the fuel inlet connection stud of the injector to avoid loosening/fuel dilution.

13.5.11 Water Separator

Remove and empty the bowl and wash out with clean fuel. Prefill the bowl with clean fuel before refitting. Always renew the sealing ring. **Fig - 29**

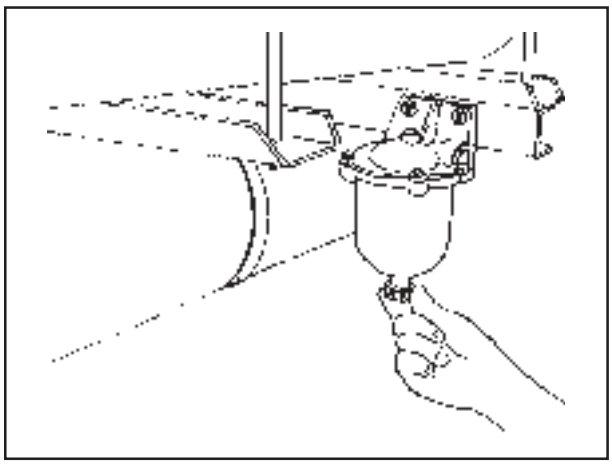

Fig. 29

13.5.12 To Remove and Refit Injector Nozzle

Clean the surrounding area of the nozzle and fuel line connections.

Remove injector pipes, clean and cover both the ends of the pipes to prevent entry of the dirt.

Remove nozzle assembly.

Use a special tools 0102015 - Adaptor Injector Removal and 0102003 - Sliding Hammer. **Fig - 30**

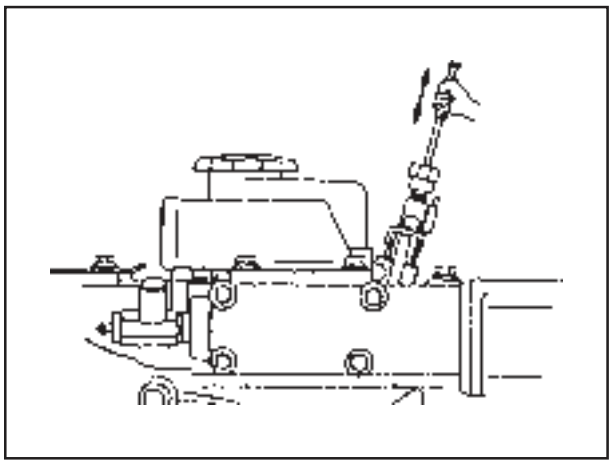

Fig. 30

13.5.12.0 Cleaning

Important: The ball profile of DSLA nozzle is not hardened, extreme care to be exercised in handling the injectors and nozzles at all levels. Do not use emery sheet or hard material to clean the nozzles.

To Clean nozzles

Use ultrasonic cleaning equipment.

Ultrasonic cleaning is a safe and effective way of cleaning the nozzles.

Ultrasonic cleaning equipment consists of generator capable of generating electrical energy at an ultrasonic frequency and a 'transducerized tank' which holds the cleaning solution and the parts to be cleaned. The Ultrasonic frequency waves are transmitted to the cleaning solution contained in the tank, which dislodges the dirt and soot.

The main objective of using this equipment is to clean the spray holes of the nozzles especially the DSLA type in which the ball profile is soft.

13.5.12.1 Test the nozzle sinking

Wash the nozzle with the diesel then immerse it in diesel oil.

Slide the needle inside the nozzle and ensure moves smoothly. The needle should fall under its own weight when withdraw vertically about 1/3rd and released. If its motion is sluggish, replace the nozzle with new one. **Fig - 31**

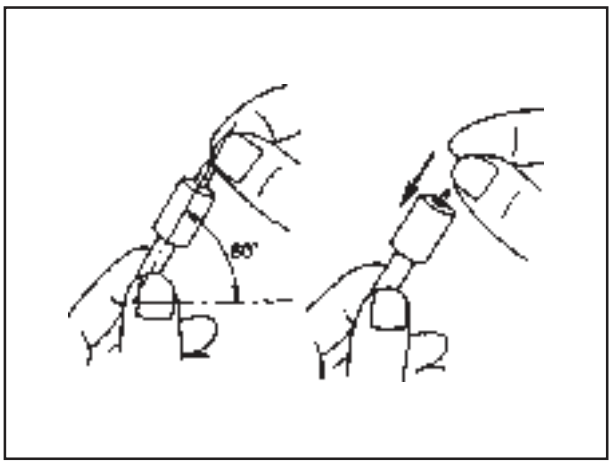

Fig. 31

Adjust the injection pressure.

Connect the nozzle holder with a nozzle tester and move the lever at the rate of about 50 - 60 strokes per minute.

Adjust the injection pressure as recommended. **Fig - 32**

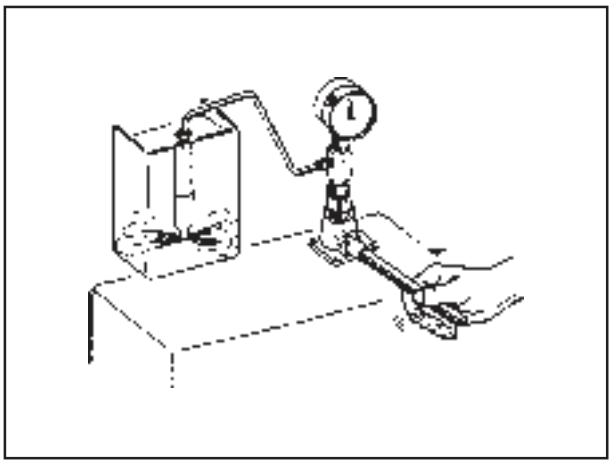

Fig. 32

If the injection pressure is not within specifications, readjust the injection pressure with the shims.

13.5.12.2 Test the spray profile

In case of the new nozzle, operate the lever at the rate of 30 - 60 strokes per minute and for a used nozzle, operate the lever at the rate of 15 - 60 strokes per minute. **Fig - 33**

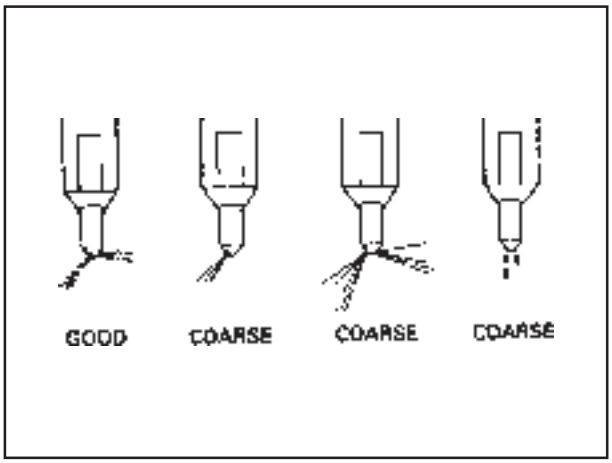

Fig. 33

13.5.12.3 Test the fuel leakage (Dribbling)

When checking for fuel leakage from the nozzle, apply a pressure of about 10 - 20 kg/cm², to lower than correct injection pressure to the nozzle. If there is no leakage, the nozzle is normal. **Fig - 34**

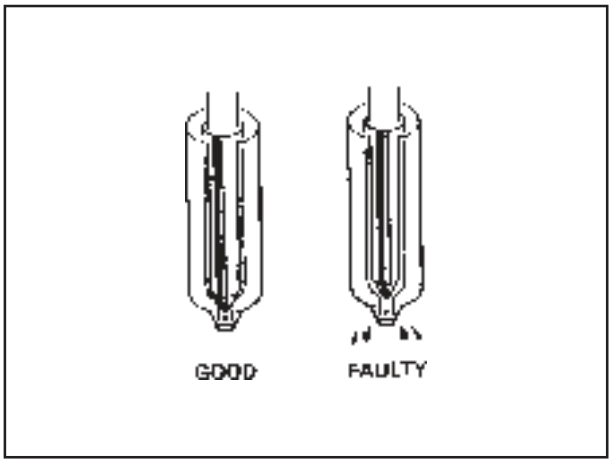

Fig. 34

13.5.12.4 Install the nozzle holder assembly.

Fit the new nozzle washer.

Tight the nozzle holder bolts alternatively right and left, tightening the bolts gradually until the specified torque is reached evenly [Torque 150 kgcm (11 lb.ft.)].

13.6 ENGINE LUBRICATION

13.6.0 Design and Operation

The **Fig - 1** diagram illustrates the arrangement of the equipment, and the flow of oil through the system.

The engine is arranged for forced feed lubrication. The oil pump supplies the lubricating oil for engine. The oil pump is located within oil sump and driven by Engine camshaft.

The oil pump forces the oil from the sump to the oil filter through pressure relief valve. The oil is then filtered through full flow paper type oil filter, the filter by-pass valve provided on filter head opens whenever the filter gets chocked. After filtering oil passes to the main oil gallery and forced through oil ducts to the crankshaft main journals and through idler gear to camshaft first bush. The camshaft oil supply through its own gallery lubricates remaining three camshaft bushes. The connecting rod bearing are supplied with lubricant passing from the crankshaft bearings, through inclined oil ducts in crankshafts. Intermittent oil supply from camshaft second bush rises via vertical oil way drilled in the crankcase meeting an angular passage in the cylinder head. This angular passage meets the third rocker shaft bracket. The tubular rocker shaft has transverse drilling for lubricating rocker lever bushes. The push rods, tappets and valve stems are lubricated by rocker lever oscillations.

The air compressor, Turbo are pressure fed through an external pipe connected to main oil gallery and the oil returns to the engine sump through timing case as well as FIP timer housing. Oil pressure gauge connection is taken from fifth main bearing on RH side.

Additional main oil gallery provided to supply the oil to piston cooling jet.

Crankcase breathing is done by a breather pipe fitted on right hand side with air and oil separator. Crankcase ventilation is improved due to venturi action of breather pipe end.

Note: Incase of Turbo charged engines the connecting rods are provided with riffle hole to lubricate gudgeon pin bush. Also turbocharged engines are fitted with water cooled oil cooler.

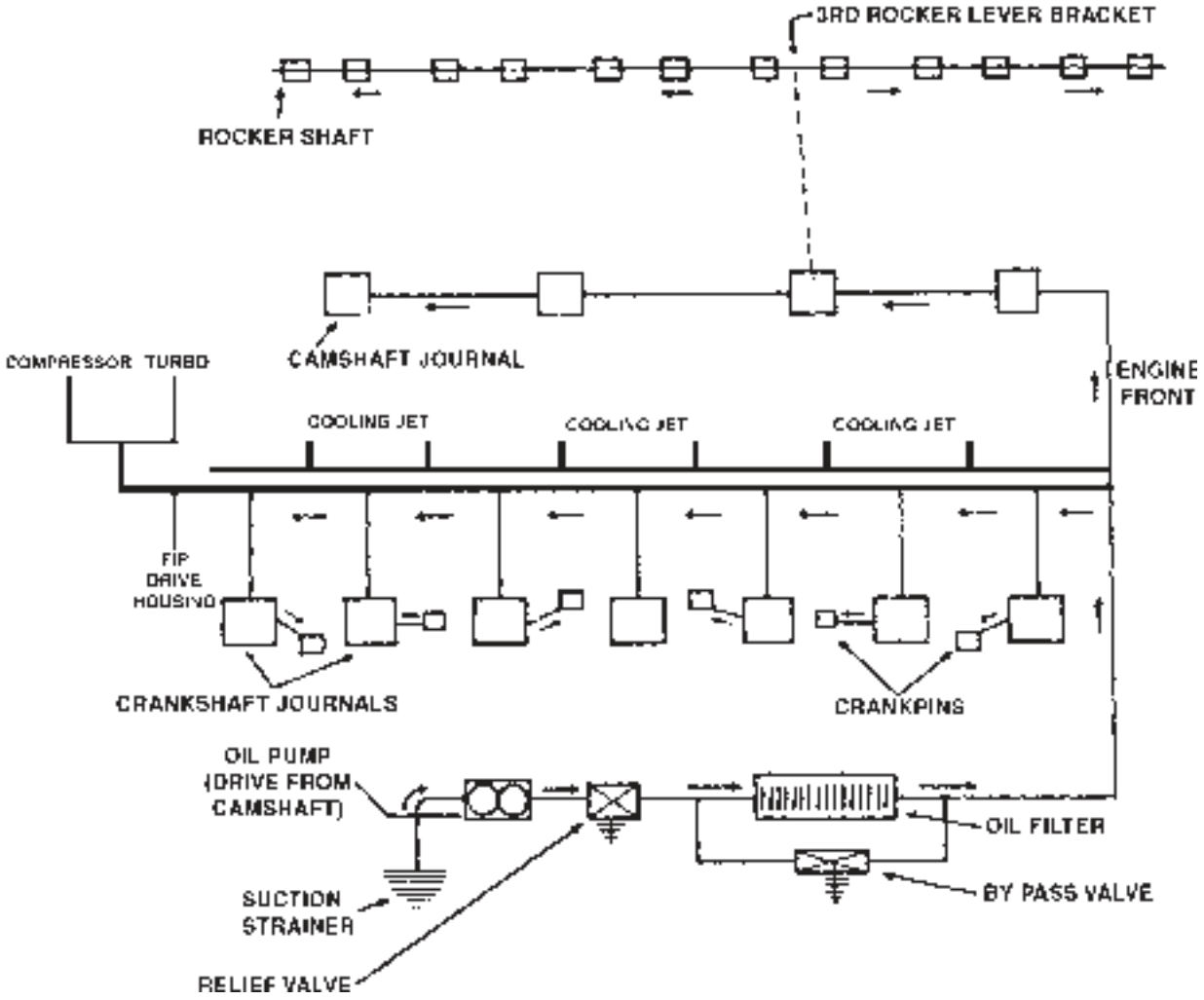

Fig - 1 Engine Lubrication Schematic Diagram

13.6.1 Piston Cooling System

Additional piston cooling gallery gets oil from filter head. When the engine oil pressure is 2 bar, the valve opens in the filter head and the oil supply starts from oil filter head to additional piston cooling gallery/ piston cooling nozzle.

Relief valve opening pressure - 1.9 - 2.1 bar.

To adjust relief valve pressure add or remove washer no. 4. **(Fig - 2)**

Piston cooling system oil supply arrangement shown in the oil filter head.

1. Filter Head
2. Steel Ball
3. Spring
4. Washer
5. Washer
6. Special Plug
7 Copper washer.
8. Dummy Plug

Fig - 2 & 3

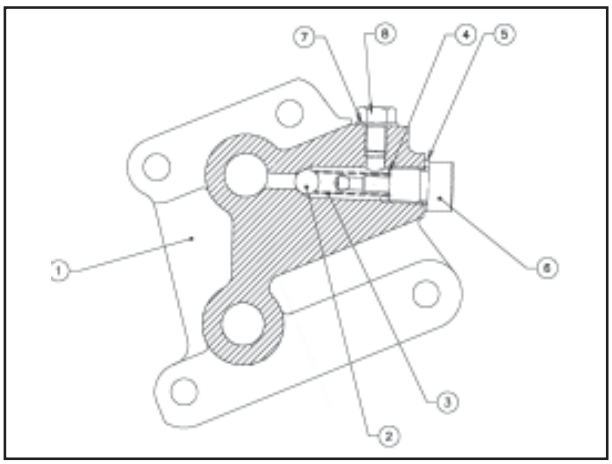

Fig. 2

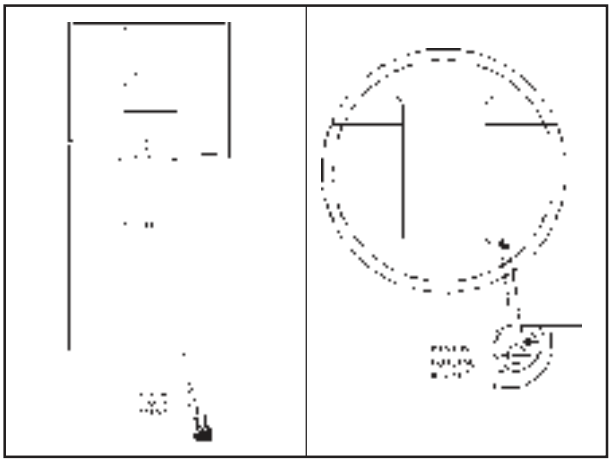

Fig. 3

13.6.2 To Remove and Refit Oil Pump

Unscrew oil pump mounting nuts and withdraw oil pump from engine.

Fig - 4

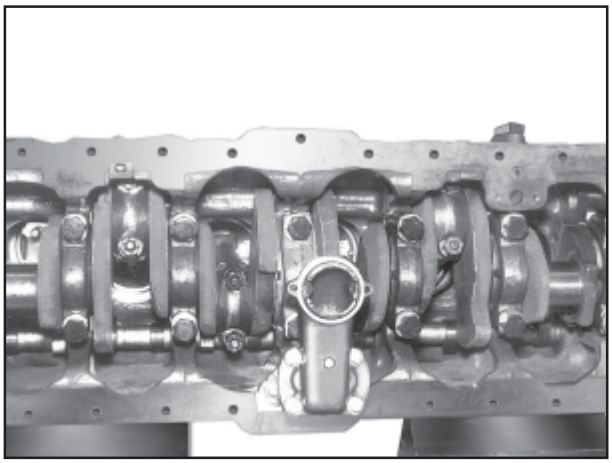

Fig. 4

13.6.3 To Overhaul Oil Pump

Inspect gears and shaft for wear. Replace if necessary.

Check contact surfaces between housing and cover. Check radial clearance between housing and gears. Also check backlash between oil pump gears using feeler gauge. Check condition of suction strainer.

Fig - 5

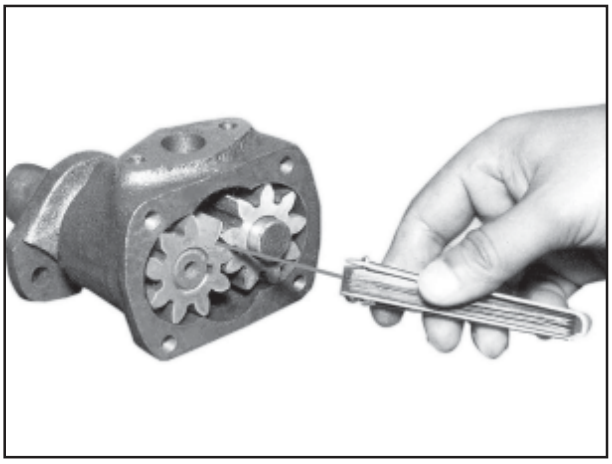

Fig. 5

13.6.4 To Remove and Refit Oil Filter Assembly

Clean oil filter head and adjoining areas.

Unscrew filter dome nut and withdraw the filter bowl.

Remove the oil filter element and conical spring.

Wash the bowl in kerosene or diesel.

Replace new genuine filter element after fixing conical spring smaller dia facing downward.

Fig - 6

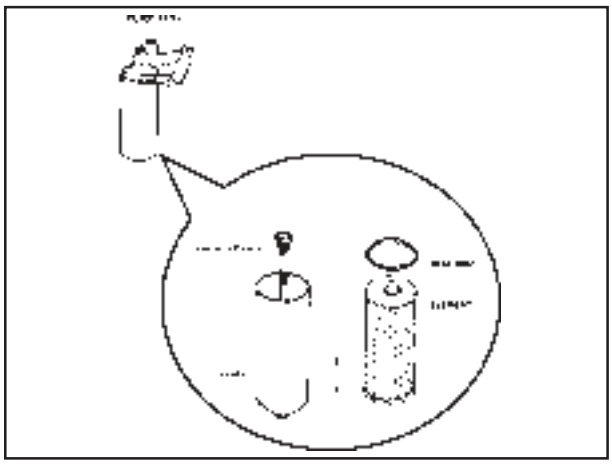

Fig. 6

Wash the filter head after dismantling in kerosene or diesel.

Check filter bypass valve spring, plunger and replace if necessary with fresh sealing washer.

Fix oil filter bowl on filter head with new sealing ring.

Refit the filter assembly on crankcase with new 'O' rings.

Fig - 7

Fig. 7

Caution: The opening pressure of bypass valve is set by factory and should not be altered.

13.6.4.0 To Remove and Refit Oil Pressure Relief Valve (PRV)

The oil pressure relief valve located on left side of crankcase near oil filter assembly. It consists of spring loaded valve with reversible five nos. welch washers.

Fig - 8

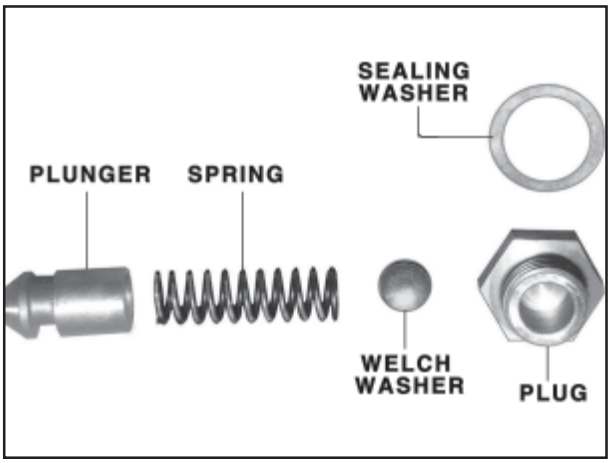

Fig. 8

Whenever low oil pressure is reported (below 1 kg/cm²) the PRV can be removed to check plunger seating on crankcase.

The plunger seating on crankcase can be re-cut using suitable cutter to achieve uniform contact.

If the seat is pitted or grooved lap the PRV plunger on the seat with lapping compound.

Fig - 9

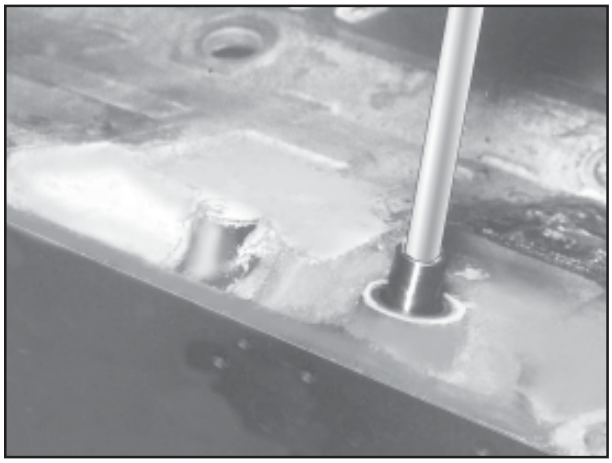

Fig. 9

To increase the spring tension reverse the welch washer or replace spring.

13.6.5 To Remove and Refit Oil Cooler Assembly

Disconnect connecting hoses. Unscrew mounting bolts. Dismount oil cooler assembly.

To refit follow the above in reverse order.

Fig - 10

Fig. 10

13.7 COOLING SYSTEM

13.7.0 General

The engine is water cooled, the coolant being circulated by a pump of impeller type.

13.7.0.1 Conventional Cooling System

The coolant, drawn by the 45 GPM (Gallons Per Minute) capacity coolant pump from radiator or thermostat control by-pass enters the crankcase. It is then passed to cylinder head. The coolant returns to radiator via thermostat housing.

During vehicle operation the thermostat serves to maintain a constant temperature of 80° to 85°C (176 to 185°F).

The thermostat starts opening at 75°C - 80°C and fully opens at 92°C by 9.5 mm stroke.

The twin thermostat arrangement prevents engine overheating in case any one thermostat fails to open.

The thermostat installed in the cooling water return employs a pressure spring and a bottom by pass control disc. It controls not only the cooling water return to the radiator but also regulates the by-pass working alternately. i.e when it allows the coolant to flow back to the radiator it closes the by pass and vice versa.

The electrical sensing unit of the cooling water temperature gauge is fixed in the thermostat housing.

The cooling system is pressurised by employing a radiator cap with combined pressure and vacuum valve. The pressure is limited by the pressure valve which opens whenever pressure exceeds 0.5 kg/cm², allowing steam or water to escape through the overflow pipe. When the engine cools down any depression in the system is relieved by the vacuum valve which opens to admit air from the overflow pipe.

Fig - 1

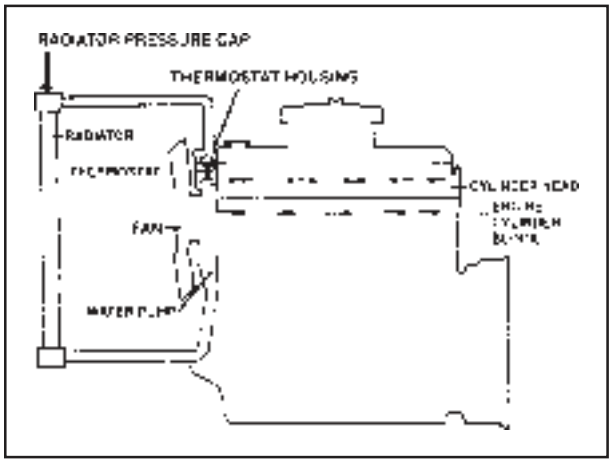

Fig. 1

13.7.0.2 De-aeration Tank (DAT) Cooling System

In a conventional cooling system the aeration of coolant due to inadequate filling, reduction in flow rate results in overheating of engine. The DAT system enables expulsion of Air while filling and ensures 100% coolant fill in the system. The DAT also gives the advantages of no loss system. Low level of scaling, low level of corrosion and forms an anti-surge system with low strain on radiator.

The schematic layout of DAT system is shown.

Fig - 2

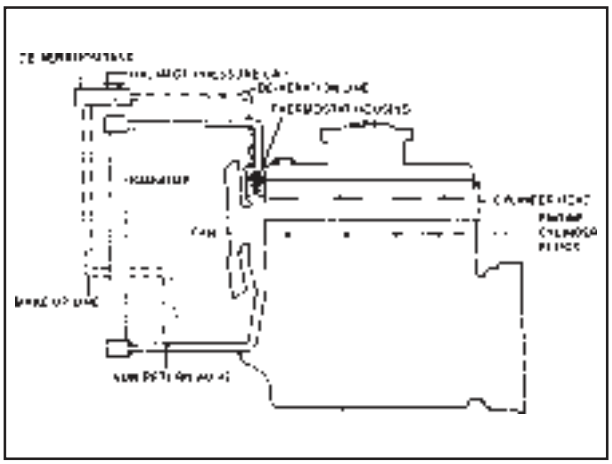

Fig. 2

In addition to conventional set up, the vent pipes are connected to a header tank from radiator top and engine thermostat housing. The filling is done by the make up line from header tank to the bottom points of radiator and engine.

13.7.1 To Flush Cooling System

Cleaning of the cooling system might become necessary because of outer conditions or because of impurities in the coolant itself.

Unfavorable outdoor conditions e.g. excessive accumulation of dust, insects etc can greatly reduce cooling capacity. The radiator fins may be cleaned by washing them with a suitable hot cleaning solutions such as 0.5ℓ of HP Radiator cleaner (supplied by M/s Hindustan Petroleum corpn.).

A 5% caustic soda solution (sodium hydroxide) may also be used for this purpose. In addition, the radiator fins should be blasted from the inside with a strong jet of air or water. When doing so note the fins are made of very thin sheet metal. Avoid rough and unskilled treatment i.e. cleaning with hard brushes.

The cooling system may also be clogged by rust deposits, grease or other impurities in the coolant. This should be removed by flushing the system several times with hot water containing a grease dissolving agent.

Let the engine run when flushing the system.

Note: Make sure that solution does not contain any acid as even the smallest amount of it in the cleaning fluid is likely to affect the cooling system unfavourably.

Having drained off the solvents, flush the system several times whilst the engine is running.

The use of hard water fosters the formation of fur which may be removed with aid of an acid free solvent. The fur removing agent must not be aggressive to copper brass and zinc materials used in the cooling systems.

Also flush the cooling system several times after application of a fur solvent.

If should lime has deposited too heavily in the radiator tubes remove radiator as described in 13.7.2 and have it cleaned mechanically by a specialised workshop.

13.7.2 To Remove and Refit Radiator

Unscrew the bumper mounting bolts and remove bumper.

Remove the grill.

Drain off coolant by opening drain cock on right front bottom of radiator.

Fig - 3

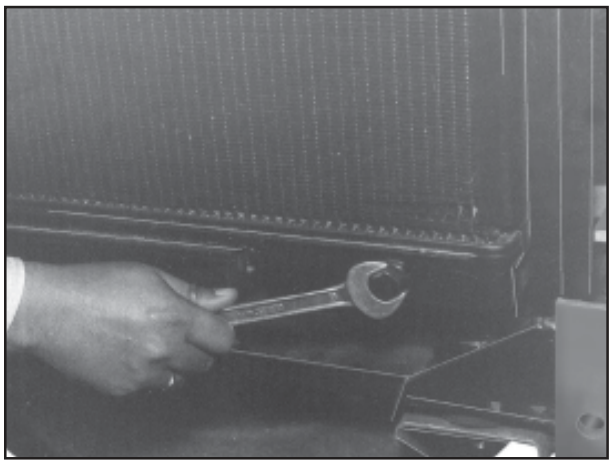

Fig. 3

Collect coolant in a clean container if anti-corrosive or anti-freeze has been added recently.

Remove upper hose connection from cooling water return.

Fig - 4

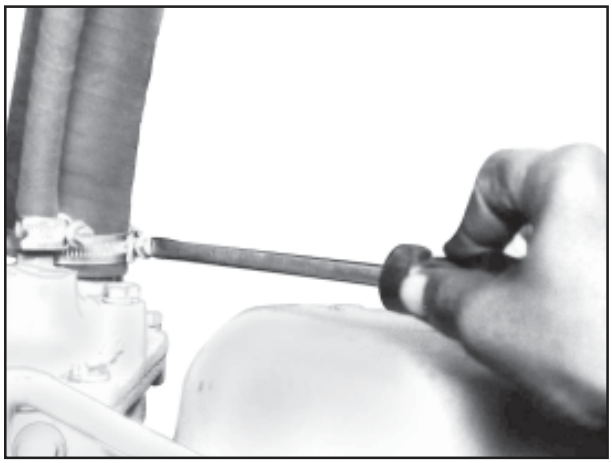

Fig. 4

Remove lower hose connection from cooling water exit.

Unscrew the 4 attaching nuts (from both sides) from the radiator frame and bottom bolts, take off radiator to the front.

To refit radiator, reverse the procedure for removal. Check the hose connections for tightness after a short test run.

13.7.3 To Test Thermostat

Remove hose connection and take out thermostat.

Fig - 5

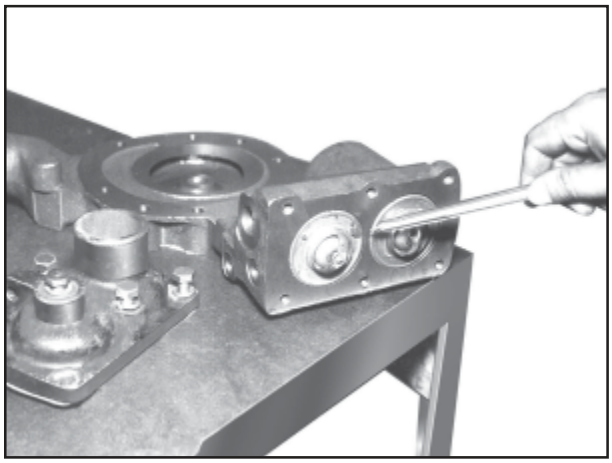

Fig. 5

Check commencement of opening. This is the temperature at which the stroke of the thermostat has risen to 0.1mm in a gradually heated water bath.

Thermostat starts opening at 75° - 80°C and fully opens at 92°C.

Measure the stroke with the aid of special device and dial gauge.

Check full working stroke

Working stroke = 9.5 mm at 92°C

Fig - 6

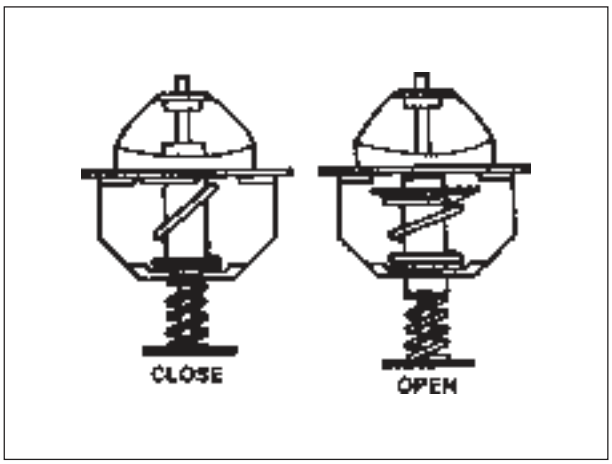

Fig. 6

13.7.4 To Remove and Refit Water Pump

Drain off coolant collecting it in a clean container if anti-freeze has been added.

Remove radiator.

Unscrew fan and remove V belt for water pump fan and alternator.

Remove hose connection from water pump and unscrew attaching bolts.

Fig - 7

Fig. 7

To refit water pump reverse the procedure for removal.

13.7.5 To Overhaul Water Pump

Dismantling

Unscrew water pump mounting securing bolts and nuts. Remove water pump with thermostat housing.

Remove the twin thermostat water outlet pipe from the thermostat housing and remove the thermostats.

Remove the fan pulley.

Remove the nuts holding the thermostat housing and impeller housing. Detach both the housing.

Fig - 8

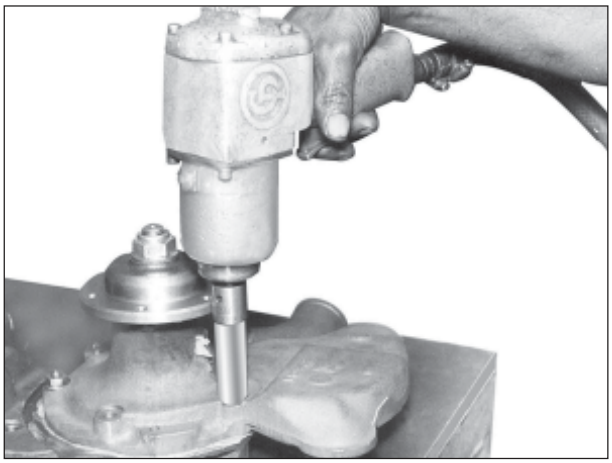

Fig. 8

Extract the water pump hub with **Special Tool 0101003 - Extractor Water Pump Hub / Impeller.**

Fig - 9

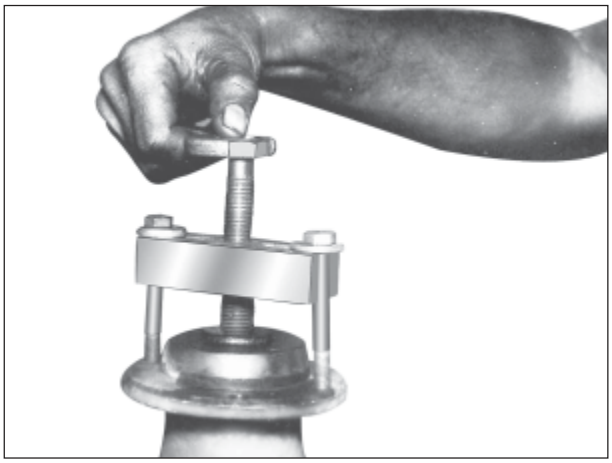

Fig. 9

Remove the stainless steel grub screw from impeller.

Extract the impeller using **Special Tool 0101003 - Extractor Water Pump Hub / Impeller.**

Fig - 10

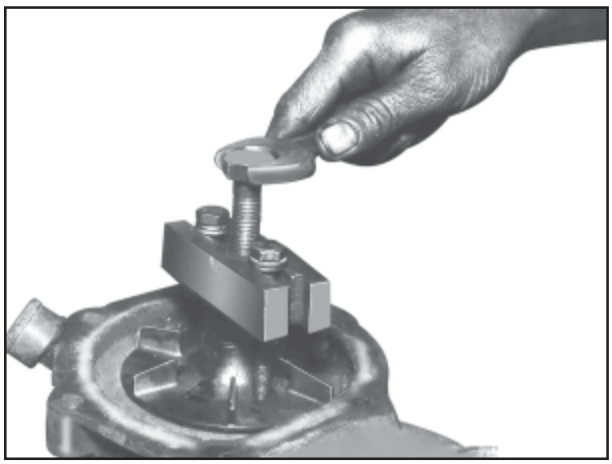

Fig. 10

Remove the woodruff key from hub end and waterpump seal.

Fig - 11

Fig. 11

Remove the outer oil seal and remove the circlip securing the waterpump bearing from the impeller casing.

Fig - 12

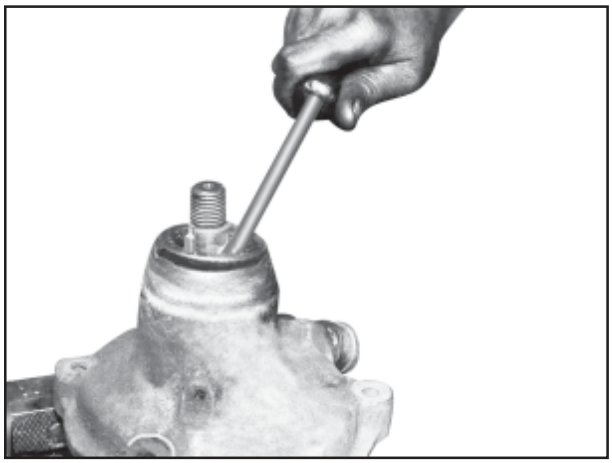

Fig. 12

Press out the water pump bearing along with driving shaft from impeller casing.

Fig - 13

Press out inner oil seal.

Press out the bearings from the driving shaft together with distance pieces.

Inspection

Clean all parts in kerosene or diesel.

Check for wear, damage or corrosion.

Check bearing seats for cracks.

Check thermostat (Refer section 13.7.3)

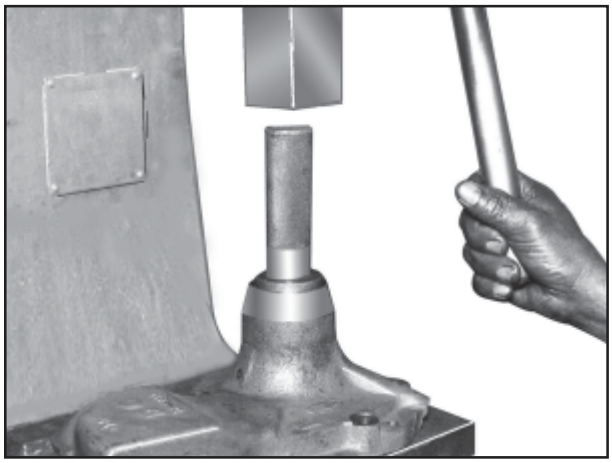

Fig. 13

Assembly

The water pump assembly procedure is in reverse order of dismantling. The following spacer selection procedure can be applied to achieve proper waterpump shaft end play of 0.000" - 0.005".

Spacer Selection

Take the impeller casing and clean.

Remove dirt / burrs if any, using compressed air.

Press both outer races of the bearings on impeller casing.

Fig - 14

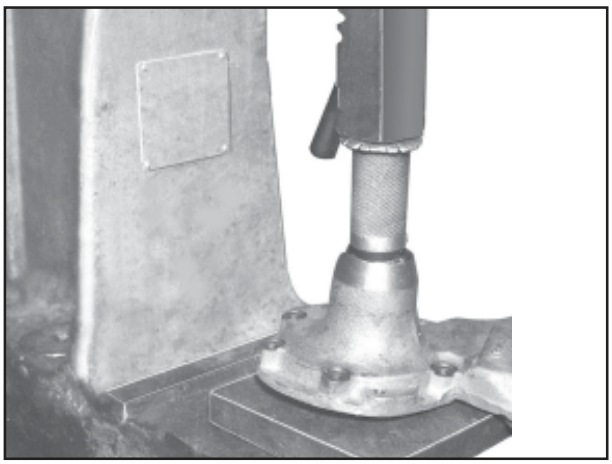

Fig. 14

Place the inner race of rear bearing on centering mandrel.

Fig - 15

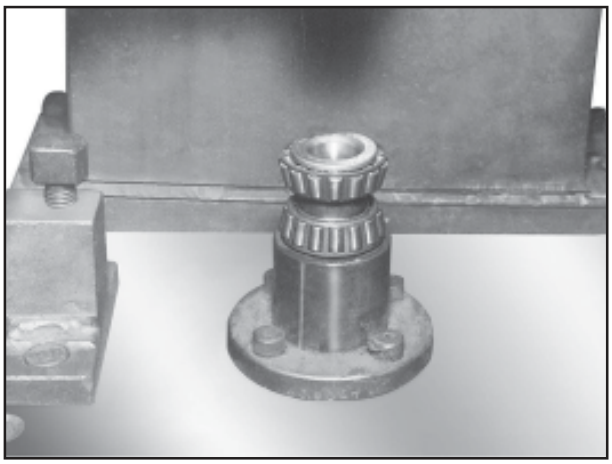

Fig. 15

Mount the impeller casing over the cone.

Fig - 16

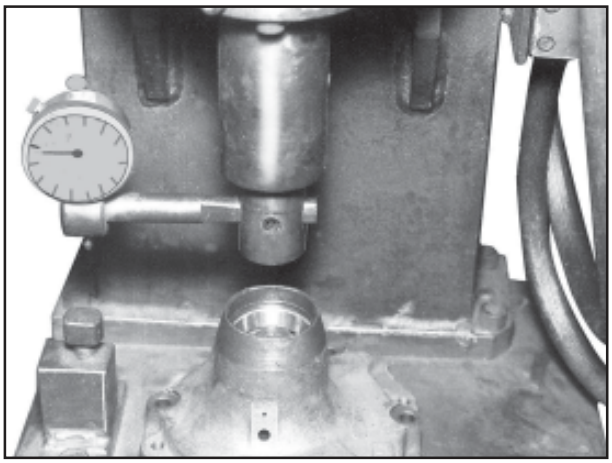

Fig. 16

Place the inner race of front bearing on the Mandrel as shown.

Fig - 17

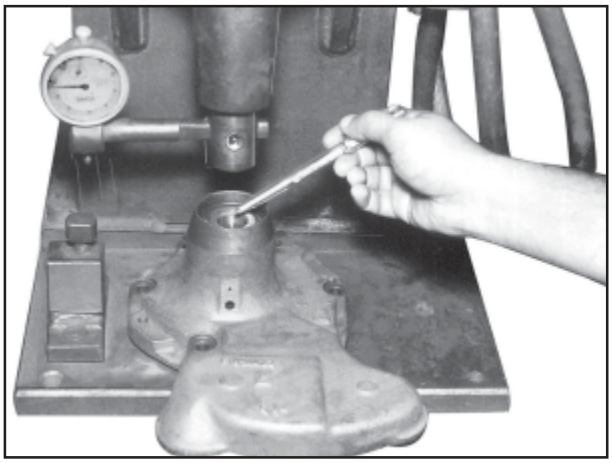

Fig. 17

Place the dial gauge fixture in position.

Fig - 18

Release the ram on the dial gauge fixture to apply an axial load of 29.5 kg (65 lb) on the bearing assembly.

Set the dial reading of zero.

Lift the ram.

Remove the dial gauge fixture without disturbing the zero setting.

Remove the impeller casing with front bearing inner race and leave the rear bearing inner cone on the Mandrel,

Place the "Master spacer' over the inner cone.

Size of Master spacer : 0.4495" / 0.4505"

Replace the front inner race.

Replace the dial fixture without disturbing the 'zero' set already.

Apply the same axial load by releasing the ram.

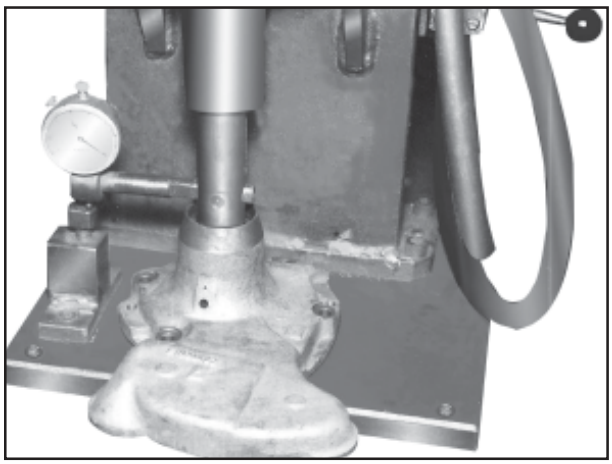

Fig. 18

13.7.6 To Remove and Refit V Belt. To Adjust V Belt Tension for Alternator.

Loosen the alternator mounting bolt.

Adjust the nut on the adjusting bolt of the alternator as per requirement.

To refit V Belt, swing the alternator towards the crankcase.

To Tension the V belt swing the alternator outwards.

Tighten mounting bolt on the alternator bracket. It should be possible to move V belt laterally 1/2" by thumb pressure on the longer side of the belt.

Fig - 19

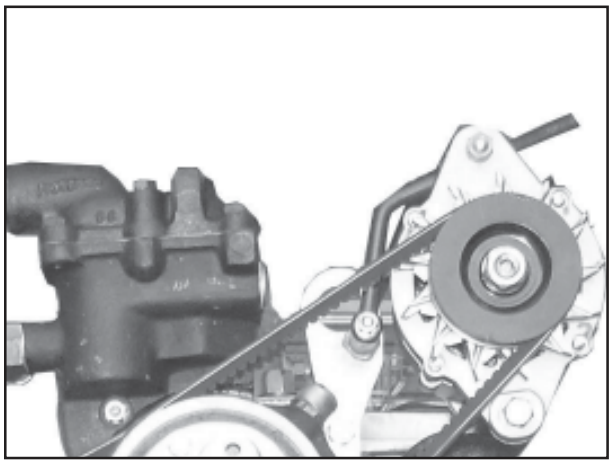

Fig. 19

13.7.7 To Remove and Refit V Belt To Adjust Belt Tensioner.

Loosen the tensioner pulley mouting bracket.

Adjust the belt tensioner as required by adjusting the nuts on the adjusting bolt on Fig - 21.

Belt tension - to move V belt laterlly 1/2" by thumb pressure on the longer side of the belt.

Tighten the mounting bolts.

Fig - 20 & 21

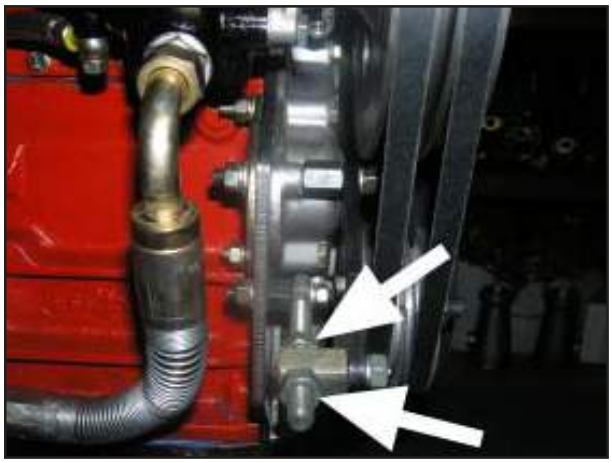

Fig. 20

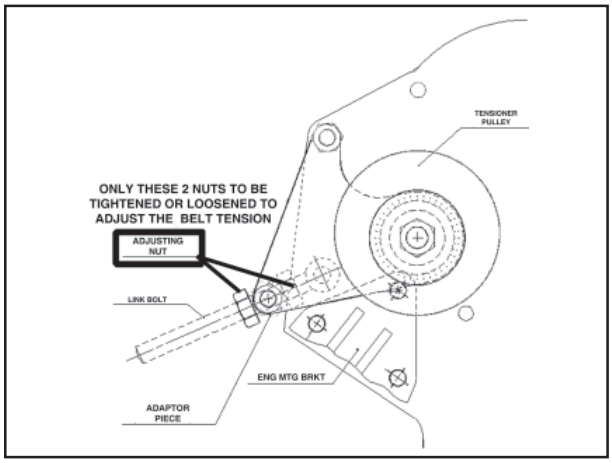

Fig. 21

13.8 EXHAUST AND INTAKE MANIFOLD

13.8.0 To Remove and Refit Exhaust Manifold

Disconnect front exhaust pipe from the exhaust manifold flange.

Unscrew manifold attaching studs from cylinder heads and remove the exhaust manifold taking care of the gaskets.

Note: For Turbocharger general maintenance and precautions Refer section 13.11.1.

Fig - 1

To refit manifold, reverse the procedure for removal.

13.8.1 To Remove and Refit Intake Manifold

Remove LDA connection and injector pipes.

Unscrew inlet manifold fixing bolts and remove inlet manifold.

To refit intake manifold, reverse the procedure for removal.

While replacing use fresh gasket.

Fig - 2

Fig. 1

Fig. 2

13.9 MAINTENANCE AND SERVICING OF DRY TYPE AIR CLEANER

* Remove dust deposit weekly by squeezing the dust evacuator valve. **Fig - 1**

* Replace dust evacuator valve immediately if it is torn, cracked, remains open or missing.

* Never operate the engine, if the restriction indicator is either broken or missing.

* If red band appear in restriction indicator, clean the primary element immediately and reset the restriction indicator by pressing the top button.

Caution: It is recommended that the primary filter element should not be cleaned till the red band appears. Good cleaning practice can increase the life of the filter element.

* Check for proper adhesion between end plate of the element and the sealing ring. **Fig - 2**

* Always clean the primary element with pressurised air. Keep a distance between the nozzle and the element. Use the pressurised air from inside to outside of the primary element.

* Don't tap on the element and never try to clean it with compressed air, flowing from outside to inside of the primary element. **Fig - 3**

* Glow an electric bulb inside the primary element. Check for any holes. If light comes out through any hole, replace the element. **Fig - 4**

* Change the air filter primary element only if

  - due for cleaning after two consecutive cleaning

  - primary element get punctured (refer electric bulb test) OR

  - red band appears in restriction indicator with engine stopped condition, even after cleaning the primary element.

* Replace the safety element after third replacement of the primary element. **Safety element should never be cleaned but always replaced.**

Note: The wing bolt should be tightened with hand alone, excessive tightening would damage the air cleaner.

Caution: Frequent cleaning of the air filter element leads to drop in the dust holding capacity, weakening of the air filter media and ruptures. This, in turn, could result in serious damage to the engine because of entry of dust in the system.

Fig. 1

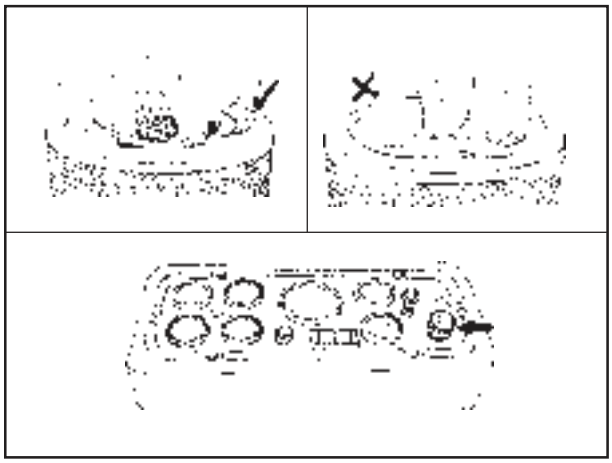

Fig. 2

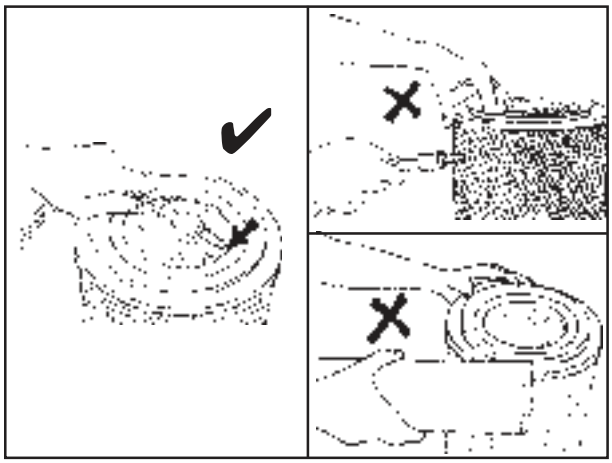

Fig. 3

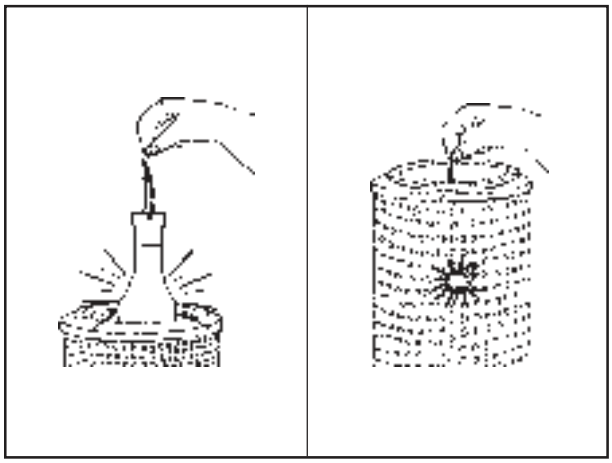

Fig. 4

13.10 ALUMINIUM RADIATORS AND CHARGE AIR COOLER

13.10.0 Service Instruction

13.10.0.0 Introduction

This manual explains the procedure for servicing (specifically, the sealing of leakages) of aluminium radiators fitted with plastic tanks that may damage in actual usage due to improper handling before installation on the vehicle.

The procedure covers the following aspects of servicing :-

* Leakage spot detection
* Sealing Techniques and the tools required
* Confirmation of proper sealing

13.10.0.1 Details of Radiator

A typical radiator is shown in **Fig - 2** for reference.

CAUTION: Users are requested to get themselves familiar with all the parts and the assembly of radiator before undertaking the servicing.

13.10.0.2 Servicing Kit

The radiator servicing kit consists of following items:-

* Screw Driver
* Monkey Plier
* Sealant resin and hardener containers (Araldite Standard of M/s Ciba Geigy make or on equivalent Epo x y based system)
* Alumaseal container
* Araldite applicator
* Brush

NOTE: Araldite rapid may be used in place of Araldite standard for faster drying and curing of seal.

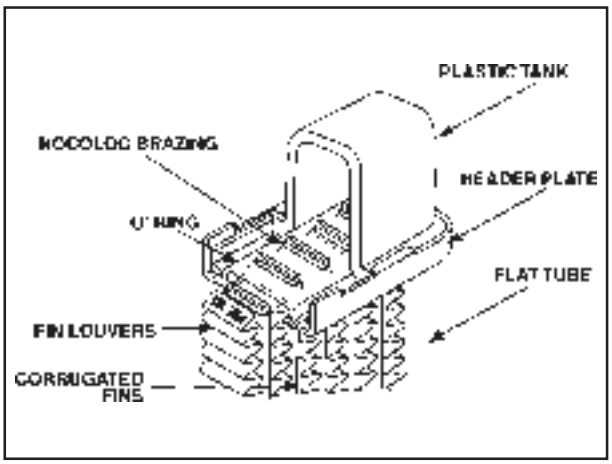

Fig. 1 Construction of Aluminium Radiators

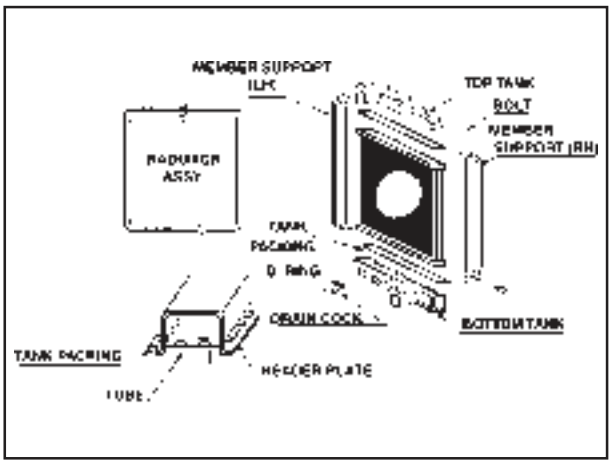

Fig. 2

13.10.0.3 Procedure for Servicing

Removal of radiator from vehicle -

* Allow the coolant in the radiator to reach to the room temperature.
* Drain the coolant from radiator completely by unscrewing the drain cock.
* Remove all the mounting fasteners, attachments like shroud, hoses etc.
* Take out the radiator from the vehicle carefully without damaging the core.

CAUTION: Radiator core and plastic tanks are susceptible to cracking due to impact and deformation.

Detection of Leakage Spot –

* Connect the inlet of the radiator to air supply at the gauge pressure of 1.5 bar.
* Seal all other outlet points.
* Dip the radiator completely in a clean water tank.
* Tilt the radiator and shake it vigorously to let the air bubbles trapped at the clinching area to escape.
* Observe carefully for one minute and locate the source of air leakage on the radiator from the direction of air bubbles that are coming out of the radiator.

CAUTION: Do not use the water tank that is used for copper radiators.

Sealing the leakage spot –

Following procedures shall be adopted for arresting leakages at different locations of the radiator.

Replacement of Plastic tank –

* Take out the member supports using 13 size spanner
* Release the clinch projections of header plate using screw driver.

Fig - 3

* After making all the clinching projections up, take out the tank from its seat in header plate while grasping the outlet.
* In case, it takes more effort, pat the tank with rubber or plastic hammer lightly.

Fig - 4

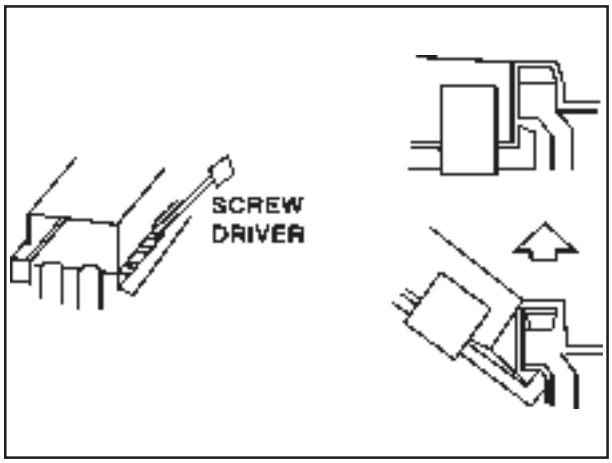

Fig. 3

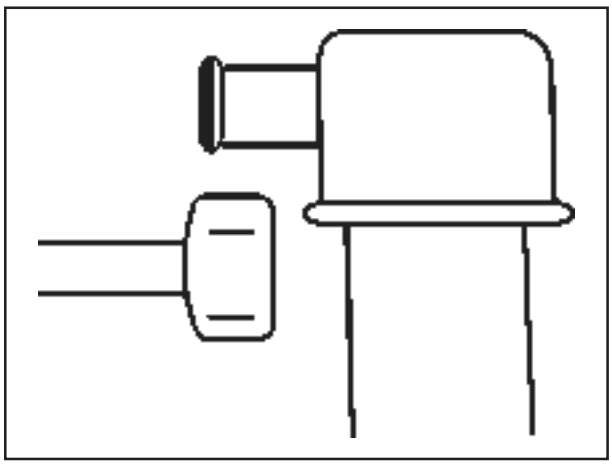

Fig. 4

* Take off the tank packing.
* Clean the area of the header plate where the tank sits, thoroughly.
* Insert new tank packing in the place without twisting.
* Insert new tank (top or bottom) as applicable.

NOTE: If the source of leakage is at the base of the tank, i.e. area between header plate and tank there is no need to replace the tank.

CAUTION: Tank packing shall be replaced, every time, the tank is taken off for servicing.

* If gap is found between the clinching projections of header plate and tank, softly hammer the projections.

Fig - 5

* Clinch the header plate projections with monkey plier.
* The sequence of clinching should be followed as illustrated in the figure.

Fig - 6

* After clinching, confirm the dimension.

Fig - 7

CAUTION: If any of the clinching projections is broken during the clinching or releasing process, discontinue the servicing and replace the entire radiator by a new one.

* Fix the member supports and tighten the bolts properly wherever applicable.

Bottom Type pipe, Drain Cock and Pressure Cap –

Bottom Type pipe -

* Take out the Bottom Type pipe using 10 size spanner.
* Remove the 'O' ring.
* Clean the seat of Bottom Type pipe and the 'O' ring groove.
* Insert a new 'O' ring.
* Fit the Bottom Type pipe back, ensuring proper tightness of the bolts.

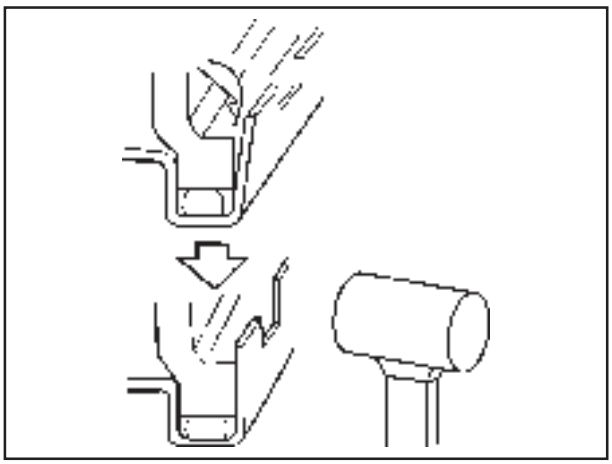

Fig. 5

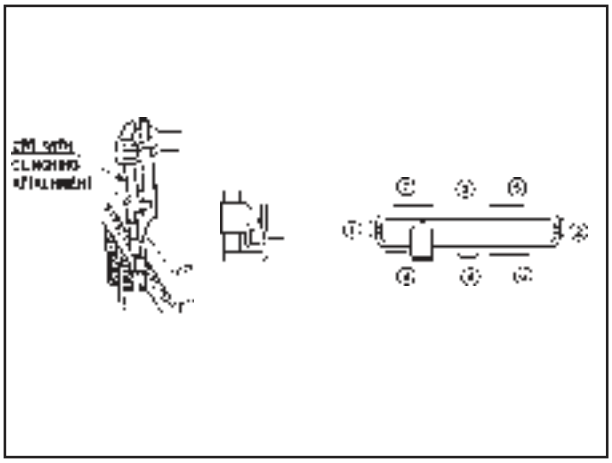

Fig. 6

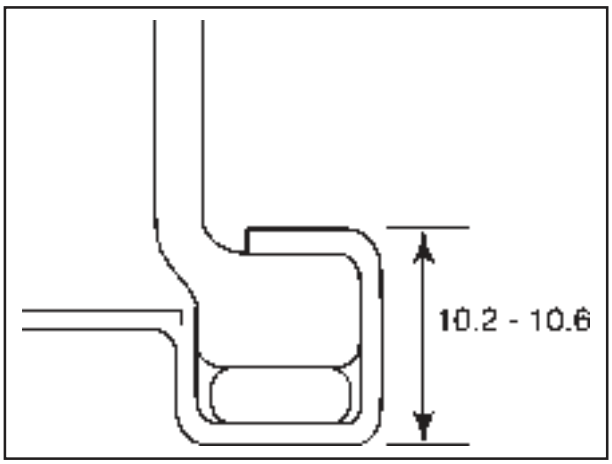

Fig. 7

Drain Cock

* Unscrew the drain cock.
* Remove the 'O' ring.
* Clean the 'O' ring groove.
* Insert a new 'O' ring.
* Screw the drain cock back.

Pressure Cap –

* Replace the pressure cap with a new one, if leakage is through if after cleaning the filler neck.

CAUTION: Always use recommended radiator pressure cap.

Radiator Core –

Different procedure of sealing shall be followed for minor and major leaks in the radiator core.

Minor Leaks : Leak spots which are very minute, are to be sealed in following manner.

* Install the radiator.
* Pour the contents of alumaseal in the radiator.
* Fill proper quantity of coolant liquid.
* Run the engine in idling for more than 20 minutes to detect leakage, if any.

Major Leaks: Procedure of sealing major leaks in the radiator is as follows :

* Wash the core with clean water and brush provided in the kit to remove dirt, dust etc.
* To remove the greasy spot on the core, apply thinner with cotton swab and take off the grease.
* Dry the core using a dryer.

CAUTION: Drying by heating must be avoided.

* Mix adequate quantity of Araldite resin and hardener in the ratio of 1:1 and stir it thoroughly.
* Apply the mixture immediately at the leakage spot with the applicator.
* If required, apply the mixture to dry and harden under the shade at room temperature for 10-12 hour.
* Allow the mixture to dry and harden under the shade at room temperature for 10-12 hour.

NOTE: * Araldite Rapid of M/s Ciba Geigy dries and hardens within one hour and hence users may use it to minimize the down time.

* Silver colour paint may be used for touching up the araldite spots and impart the aluminium type appearance.

CAUTION:

* Do not damage the fins during the process.
* Confirm that fins are set properly, if disturbed during the process.
* As the Araldite is inflammable, do not dry it by heating.
* Proper cleaning of radiator core is must for proper setting of Araldite or else it will come off.

Confirmation of Proper Sealing

* After the sealing work is over, assemble the radiator properly.
* Subject the assembled radiator to leakage test as shown in point 4.2.

NOTE: If the problem of leakage persists, it is advisable to replace the radiator with new one.

13.10.0.4 Radiator Installation

* Ensure that all the openings of the radiator are closed properly except the inlet.
* Install the radiator on the vehicle ensuring proper alignment, damping etc. as applicable.
* Connect the inlet and outlet pipes and clamp them.
* Fit the fan shroud.

Fill the radiator with proper quantity of fresh coolant as recommended.

13.10.0.5 Do's and Don'ts

Do's

Always use the clinching tool for removing and refitting the radiator tanks.

Always drain the radiator fully before removing it from vehicle.,

Always refill the radiator with coolant recommended by the manufacturer.

Always check tank packing before reassembly of tank to core.

Don'ts

Never open the pressure cap when the radiator is hot.

Don't use acid for cleaning the tubes and tanks.

Don't use manual force for cleaning clogged tubes.

13.11 TURBOCHARGER

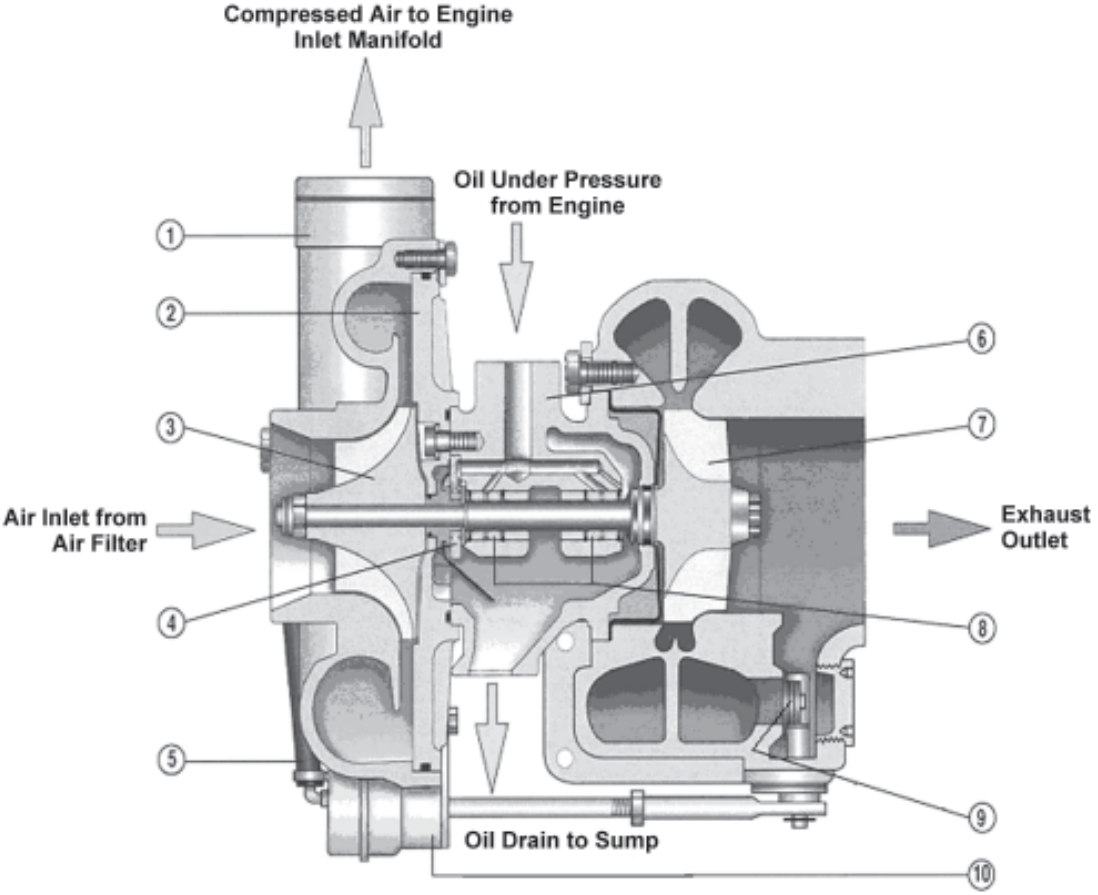

1. Air Outlet from Compressor
2. Back Plate
3. Compressor Wheel
4. Thrust Bearing
5. Boost Pressure Hose to Actuator
6. Center Bearing Housing
7. Turbine Wheel
8. Journals
9. Waste Gate Valve
10. Actuator

Fig. 1 Turbocharger with Waste gate

13.11.0 General

In exhaust gas turbocharging, the thermal energy in the exhaust gas, which would normally be wasted, is used to drive a turbine.

The turbine drives a compressor, which draws in filtered air and feeds this, at a higher pressure, to the engine.

This enables more fuel to be burnt with a greater mass of charge air, increasing engine power output.

Better air availability enhances better combustion, thus leading to lower fuel consumption and less emission.

13.11.0.0 Design and Operation

Turbocharger is operated on the exhaust gas, which is normally wasted.

Turbocharger consists of:

1. Turbine wheel
2. Turbine housing
3. Compressor wheel
4. Compressor housing
5. Journals
6. Bearing housing
7. Waste gate (When provided)
8. Actuator (moved by the boost pressure opens or closes the waste gate valve)

Exhaust gas is used to drive the turbine wheel. Turbine wheel rotates the compressor wheel, which is mounted on the same shaft. Compressor wheel sucks the clean air through the air filter. The clean air is compressed and sent into the engine.

Due to more air in the engine more fuel can be burnt. Due to more fuel and more air, we get more power from the same engine. When waste gate valve is fitted, at higher engine speeds the waste gate limits the exhaust gas flow through the turbine by diverting a portion of the exhaust gas direct to the exhaust pipe.

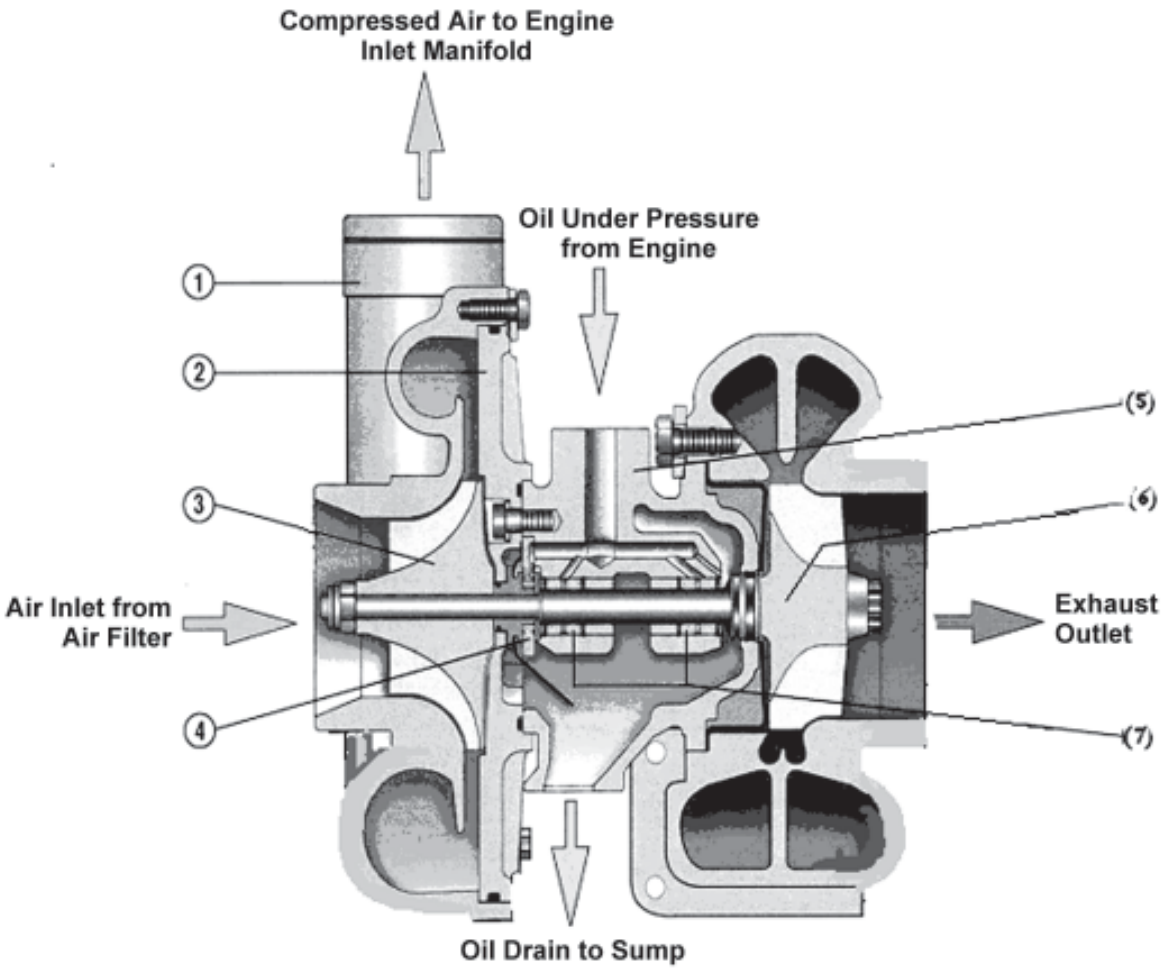

1. Air Outlet from Compressor
2. Back Plate
3. Compressor Wheel
4. Thrust Bearing
5. Center Bearing Housing
6. Turbine Wheel
7. Journals

Fig. 2 Turbocharger without Waste gate

13.11.0.1 Benefits of Turbocharging

Lower fuel consumption

Lower emission

Better torque characteristics

Lower weight and a smaller engine package

Lower engine noise

Altitude compensating

13.11.0.2 For Enhancing Turbocharger Life

Turbocharger needs CLEAN ENGINE OIL & CLEAN AIR (from the air filter.) for it's proper functioning and durability for the following reasons.

1. Oil contaminated with dirt or foreign material will wear the journals and journal seating area.

2. Dirt in the oil also blocks the oil holes in the journals (bearings) and bearing housing leading to oil starvation to the turbocharger.

3. Filtered oil at required pressure is essential to lubricate and cool the journals.

4. The clearances between the rotating parts are very close(in microns)

5. Turbocharger rotor assembly rotates at high speeds up to 1,00,000 rpm at the rated engine power. Therefore turbocharger rotating parts are balanced to very high accuracy for optimum performance.

6. Since turbocharger compressor wheel is made of aluminum alloy rotating at very high speeds, dust, sand or any foreign particle entering in to the turbocharger compressor housing will damage the compressor wheel blades, which will lead to turbocharger failure.

7. Damaged blades will lead to imbalance in the rotor assembly resulting in shaft or bearing failure.

13.11.0.3 Preliminary Checks

If your Turbo engine does not run the way it Should,

Do not start your Search For Defects at the Turbocharger.

Check for the following:

a. Is the clutch slipping?
b. Does the vehicle brake drag?
c. Is the throttle opening fully?
d. Is the air filter system blocked?
e. Is the compression of the engine low?
f. Is the fuel injection system correct?
g. Does the crankcase breather system function?
h. Is the exhaust pipe blocked/ damaged?

After the above inspection now you can look at the turbocharger for cause of trouble.

Please do not try to service or repair the Turbocharger yourself.

Consult TEL Service centre along with AL Service engineer.

If all parameters outside turbocharger are satisfactory as per the checklist given earlier, inspect the turbocharger.

Disconnect compressor inlet and turbine outlet pipes and visually examine both the wheels. If no fault is found remove turbocharger from the engine and send it for detailed inspection by TEL Service Centre. (Please refer to serviceable parts while overhauling.)

13.11.0.4 Serviceable Parts* of Turbocharger

1. Core assembly kit
2. Overhaul kit
3. Secondary kit
4. Gasket kit
5. Actuator Assembly kit (For Waste gated turbocharger)
6. Boost pressure Hose kit (For Waste gated turbocharger)

Core Assembly Kit

Description	Qty	
	For Non-Waste Gated Turbo	For Waste Gated Turbo
Core assy	1	1
Segment (CS)	4	3
Bolts	8	8
Segment (TS)	3	3
Bolts	6	6

Overhaul Kit

Description	Qty	
	For Non-Waste Gated Turbo	For Waste Gated Turbo
Journal	2	2
Snap Ring	4	4
Thrust Plate	1	1
Thrust Ring	1	1
Piston Ring T.S	2	2
Piston Ring C.S	1	1
O' Ring (Big)	1	1
O' Ring (Small)	1	1
Socket Head Bolt	4	4
Washer	4	4
Shaft Nut	1	1
Bolt Hex. (C.S)	8	8
Segment (T.S)	3	3
Bolt Hex. (T.S)	6	6
Segment (C.S)	4	3
Sealing Ring	-	2
Tube Clamp	-	2
Boost Pressure Hose	-	1
Locking plate	-	1

Secondary kit

Sl. No.	Description	Qty
1.	Flinger Sleeve (Single Piece Type)	1

Gasket Kit

Sl.No.	Description	Qty
1	Gasket (Oil Inlet)	1
2	Gasket (Oil Outlet)	1
3	Gasket (Turbine inlet)	1

Boost Pressure Hose Kit

SL. No	Description	Qty
1	Boost pressure Hose	1
2	Tube Clamp	2
3	Sealing Ring	2
4	Connecting Adaptor	1
5	Hollow screw	1

Actuator Assembly kit

SL. No	Description	Qty
1	Actuator Assembly + Tube clamp + Boost pressure hose	1
2	Tube clamp	1
3	Connecting Adaptor	1
4	Sealing ring	2
5	Hollow screw	1
6	Locking plate	1

* These are serviceable parts recommended for use only by TEL Authorised Service Centres for repair / overhaul of Turbochargers.

13.11.1 Precautions to be taken for Turbocharger Installation

Check air cleaner (filter element) and it's connecting pipes for blockage, distortion etc, and should be cleaned / replaced.

Check and clean engine intake and exhaust manifold pipes. The oil feed and drainpipe to the turbocharger should be examined for dirt, cracks, distortion, etc. pipes should be thoroughly cleaned before fitment. If found damaged it should be replaced.

Remove any tape or cover used as temporary cover to the pipe inlet.

Examine the engine oil and the oil filter condition.

Replace the oil and the filter element if necessary. (Adhere to Ashok Leyland's recommendation for correct grade & change period).

Use recommended new gaskets for fitment of the turbocharger to the engine. Do not apply gasket sealant (Shellac, Anabond, grease etc.,) at the oil inlet and the oil outlet flanges for pasting the gaskets.

Do not use a strainer type gasket . (This is a temporary gasket used only for the initial testing in the Factory)

Ensure correct fitment of the turbocharger to the engine (rotate the turbine shaft and check for its free rotation).

Fitment of inlet and outlet pipes (to turbocharger) under strain may result in turbocharger failure.

NOTE:
- After long storage before starting the engine, fill-up the oil feed hole of the turbocharger with clean engine oil to ensure lubrication during start-up.
- Crank the engine till you notice oil pressure in the gauge before you start the engine.
- Start the engine and idle for two minutes before accelerating the engine.
- Check the engine oil pressure.
- Do not run the engine if oil pressure is found less than that recommended.
- When the engine in running, check all air, oil and exhaust connections for leaks.

CAUTION
- Do not accelerate the engine immediately after start.
- Idle the engine for at least two minutes after start and before the engine is stopped.

13.11.2 Do's and Don'ts

Do's

* Regular change of engine oil / oil filter.
* Regular change / cleaning of air filter element.
* Check for oil pressure at engine idling condition. (Minimum oil pressure to be as per recommendation during idling.)
* Idle the engine for two minutes after starting the engine.
* Idle the engine for two minutes before switching off the engine.
* Periodic cleaning of crankcase breather is necessary to allow free flow of oil from turbocharger outlet.
* Regularly check all air, oil and exhaust connections for leaks and abnormal dust / oil / carbon build up.

Don'ts

* Don't run the engine with low oil pressure.
* Don't put the engine under full load immediately after starting. (Always run the engine/vehicle at moderate speed and load for a few minutes before going to full load and speed.)
* Don't switch off the engine under full load.
* Don't run the engine with DAMAGED
  - Oil feed and drain pipes
  - Pipes between air filter and turbocharger
  - Exhaust pipes
* Don't run with Leaky connections from the air cleaner to the turbocharger and turbocharger to the inlet manifold.

CAUTION:
- Don't open the Turbocharger yourself.
- Please contact the Ashok Leyland Authorised Dealers for any turbocharger problems.
- As the turbocharger is precision built, assembled and tested by highly skilled personnel, we do not recommend opening of the Turbocharger for servicing by unauthorised persons.
- However, if need be, please contact Turbo Energy Ltd Service centres for assistance for servicing Turbochargers.

13.11.3 Turbo charger trouble shooting

Possible Cause	Engine Lacks power	Black smoke	Blue Smoke	Turbocharger noisy	High oil consumption	Oil leak from compressor side	Oil leak from turbine seal
Dirty air cleaner	✓	✓	✓				✓
Restricted compressor intake duct / piping	✓	✓	✓	✓			✓
Restricted air duct from compressor to intake manifold	✓	✓		✓			
Air leak in pipe from air cleaner to turbocharger				✓			
Air leak in pipe from compressor to inlet manifold	✓	✓	✓	✓			
Air leak from inlet manifold	✓	✓	✓	✓			
Foreign object in exhaust manifold (from engine)	✓	✓	✓	✓			✓
Restricted exhaust system	✓	✓					✓
Exhaust manifold cracked, gaskets blown or missing	✓	✓		✓			
Gas leak at turbine inlet/exhaust manifold joint	✓	✓		✓			
Gas leak in exhaust piping				✓			
Restricted turbocharger oil drain line			✓			✓	✓
Restricted/blocked/distorted crankcase breather			✓			✓	✓
Turbocharger bearing housing sludged or coked			✓			✓	✓
Fuel Injection System defective / incorrectly adjusted	✓	✓					
Engine valve timing incorrect	✓	✓					
Worn engine piston / piston rings / liners	✓	✓	✓			✓	
Eroded valves and / or pistons	✓	✓	✓			✓	✓
Excessive dirt build up on compressor wheel and housing	✓	✓	✓	✓		✓	✓
Boost pressure control swing valve / poppet valve doesn't close/damaged	✓	✓					
Boost pressure pipe to actuator leaking / damaged	✓						
Piston ring sealing defective			✓			✓	✓
Turbocharger journal (bearing) defective	✓	✓	✓	✓	✓	✓	✓
Foreign body damage on compressor / turbine wheels	✓	✓		✓	✓		
Insufficient oil supply to turbocharger	✓	✓		✓	✓		

13.12 TIGHTENING TORQUES	Kgm	lb.ft	Nm
Rocker assembly nut	5.5 - 6.2	40 - 45	54 - 60
Injector clamp nut	4.1	30	40
Connecting rod cap bolt	10.4 - 11.1	75 - 80	102 - 109
Main bearing cap bolt	20.1 - 21.5	145 - 155	197 - 211
Idler gear assembly nut	9.7 - 10.4	70 - 75	95 - 102
Cam shaft gear set screw	19.4 - 20.1	140 - 145	190 - 197
Damper puller setscrew	27.7 - 30.5	200 - 220	272 - 299
Flywheel adaptor to crankshaft bolt	22.8 - 24	165 - 174	224 - 235
Flywheel to adaptor flange bolt	11.7 - 13.1	85 - 95	115 - 129
Cylinder head assembly nut	17.3 - 18	125 - 130	170 - 176
Flywheel housing setscrews	5.5 - 6.2	40 - 45	54 - 60
Sump bolts	3.5	25	34
Side cover bolts	2 - 2.7	15 - 20	20 - 26
Water pump hub lock nut	13.9 - 14.5	100 - 105	136 - 142
Engine metacone mounting nut	19.4 - 20.8	140 - 150	190 - 204
Cooling Jet Banjo Bolt	1.4	10	14
Compressor pulley nut	9.2 - 10.2	67 - 74	90 - 100
FIP drive spline lock nut	6.2 - 7.6	45 - 55	60 - 75

13.13 Recommended coolant

Coolant	Name & Address of the manufacturer	Recommended Concentration		Change intervals in km
		For Brass- Copper Radiator	For Aluminium Radiator	
Gulf Euro Cool	Gulf Oil Corporation Limited, Lubricants Division IN Centre, 49/50, MIDC, 12th Road, Andheri (E), Mumbai - 400 093. INDIA	20%	50%	75,000
GC 1200	Sunstar-CCI (India) Private Ltd., 67, Maruthi Industrial Area, Sector 18, Gurgaon - 122 015. Haryana.	30%	50%	60,000
GCL-2000		20%	50%	75,000
Tejon 800	S S Industrial Corporation G-10, Udyog Nagar, Delhi - 110 041.	20%	50%	75,000
Tejon 1200		30%	50%	60,000
MAK® SuperKool	Bharat Petroleum Corporation Limited, ECE House, 28A Kasturba Gandhi Marg, New Delhi - 110 001.	20%	50%	75,000

Note: For Sub-zero temperature application use 1 : 1 Ratio.

To Prepare the coolant, it is recommended that only potable drinking water is used.

Caution: Use of any hard water will only increase scale formation in the Engine. Also please note that coolant does not alter the hardness level of water.

13.14 Recommended Lubricants

Use of correct grades of lubrication is most important to prevent the wear and tear of components. The chart shows the oil grade recommended by AL.

			ASHOK LEYLAND GENUINE LUBRICANTS								
Aggregate	**Ashok Leyland Specification**	**Ambient Temp. °C**	**Gulf Oil India**	**Indian Oil Corporation**	**Hindustan Petroleum**	**Bharat Petroleum**	**Elf Lubricants**	**IBP**	**Chemoleums**	**Sah Petroleums IPOL**	**Valvoline Cummins Ltd.**
Bharat Stage II Norm Engines #	API CG4 + MB 228.3	-15 and above	**Gulf Superfleet Special 15W40**	Servo Premium CG4 15W40	HP Milcy Eurol 15W40	MAK®-CG4 15W-40	Elf Performance Trophy DX 15W 40	IBP Turbo CG4 15W40	Turbo CG4 15W40	IPOL MCG Diesel Premium 15W40	VALVOLINE All Fleet Premium 15W40

13.15 Filling Capacity

Aggregates	Qty (ℓ) Minimum	Qty (ℓ) Maximum	Change Period (km)
Engine (Without Oil Filter)	10	12.5	10000

Note: The drain limits indicated are only for plains operation. For Ghat operations drain interval to be halved.

13.16 MAINTENANCE PROGRAMME

		Lubricant	No. of points	PDI	Daily	Weekly	Every 8000 km	Every 16000 km	Every km x 1000	Remarks
A.	**General**									
1	Check and tighten, front and rear engine mounting / other peripherals bolts			✓			✓			
2	Check and tighten cylinder head nuts/bolts for correct torque in correct sequence			✓					96	
3	Check and adjust valve clearance on cold engine			✓				✓		
4	Check vibration damper and replace if necessary								72	
5	Check compression pressure								60	
B.	**Lubrication System**									
1	Check oil pressure (minimum 1.0 kg/cm² at idling rpm and 85°C engine temperature)			✓	✓					
2	Check and top up oil level in sump	O	1		✓					
3	Change engine oil and filter element		1	✓					10	
4	Remove and clean breather								48	
5	Clean and refit engine sump and oil pump strainer								48	
C.	**Cooling System**									
1	Check and top up coolant level in radiator				✓					
2	Check radiator hoses and clamps for leakages and tightness			✓		✓				
3	Check and adjust fan belt tension			✓		✓	✓			
4	Check and tighten radiator stay rod and radiator mounting bolts			✓				✓		
5	Lubricate water pump bearing.	G	1	✓		✓				
6	Check water pump, recondition if necessary								48	
7	Drain cooling system and fill recommended coolant									Refer section 5.13
8	Replace cooling system hoses and rubber pads for radiator mounting and stay rod								72	
D.	**Fuel System**									
1	Check fuel pipes on suction, pressure and overflow line, for leakages and tighten if necessary.			✓		✓				
2	Lubricate accelerator linkages	G	2				✓			
3	Lubricate accelerator link pedal shaft	O	1				✓			
4	Check and tighten F.I.P. / filter mountings								32	
5	Check and adjust F.I.P. timing								32	

*** Both the fuel filter elements must not be changed at the same time**

09.12 MAINTENANCE PROGRAMME

		Lubricant	No. of points	PDI	Daily	Weekly	Every 8000 km	Every 16000 km	Every km x 1000	Remarks
6	Replace fuel filter element*									
	a. Primary element							✓		
	b. Secondary element							✓		First 24000kms & thereafter every 16000kms
7	Replace chassis filter (Single)								10	
8	Check and drain water separator					✓				
9	Clean fuel tank and strainer								48	
10	Check injector for correct opening pressure and spray characteristics, adjust if necessary								56	First 16000km also
11.	Clean and refit feed pump strainer						✓			
12.	Drain fuel filter bowl, till clear fuel appears and bleed the system						✓			
13	Re-calibrate fuel injection pump and timer								150	
14	Replace fuel hoses								150	
E.	**Air Intake and Exhaust**									
1	Check and clean air cleaner - primary element (If restriction indicator shows red band)									
2	Replace air cleaner primary element (After 2 consecutive cleaning).									
3	Replace air cleaner safety element (At the time of third replacement of primary element or once in a year - whichever earlier).									
4	Check restriction indicator, if necessary clean the element				✓					
5	Check air inlet hose for any puncture/damage					✓				
6	Check for any blockage / breakage at rainhood assembly					✓				
7	Check Turbocharger mounting			✓					24	
8	Check charge air cooler for any blockage of fins and clean the cooler if necessary			✓					32	
9	Check charge air cooler hoses for any damage						✓			
10	Check exhaust manifold and silencer for leaks and tightness			✓				✓		
11	Check intake and exhaust manifold mounting fasteners fins and clean the cooler if necessary			✓					32	