Introduction

Thank you for purchasing the series trucks supplied by Anhui Hualing Automobile Co., Ltd.

With the view to driving the motor vehicle safely and comfortably at most time, the Operation Instructions describe the main points of the proper operation and the simple maintenance and service.

Before operation, the Operation Instructions must be read carefully in order to avoid the troubles of the truck and accidents caused by the mal-operations.

Due to improvements made to the products, data herein is subject to change without notice.

Anhui Hualing Automobile Co., Ltd

Before reading this Instruction Manual

- Various data are indicated herein on the basis of the model No. of the trucks, the motor vehicle type, Engine No., etc. Therefore, you are kindly requested to confirm the Model No., etc., of the truck that you have purchased.
- You are kindly requested to understand that the contents of the descriptions and sketches in this Instruction Manual differ somewhat from the actual truck in some cases that you have purchased because of different specifications, improvements made, etc.
- The meanings of the marks used in this manual are described as follows:
  OPT :It stands for special accessories.
- In this Instruction Manual, the following four items of prompts describe the important precautions and give supplement notes. Each item contains important contents, and therefore, they shall be read and observed carefully.

Danger ⚠ It describes the precautions that shall be taken when topping up such dangerous materials as the battery fluid or the additives to cooling fluid, etc.

Warning It means that when this precaution is not observed, a serious injury, a fire or even a fatal accident may be resulted from sometimes.

Caution ⚠ It means that if this precaution is run counter to, dangerous conditions or damages to equipment and parts, etc., may be caused wherefrom sometimes.

Note It describes the recommendations, supplementary knowledge, etc., necessary for effectively operating the motor vehicle.

- In this Instruction Manual, the numerical values are shown in SI unit (Standard International Unit) with the conventional unit (Metric unit) indicated in { }. In case the numerical values are not indicated in both units, it means the value in SI unit is the same as that in the Metric unit. SI unit is the abbreviation of Le système Intemational d'Unitès.

e.g. 686kpa{ 7kgf/cm²}

- 686kpa — SI unit (Standard International Unit)
- 7kgf/cm² — Conventional unit (Metric Unit)

Duplicate of Registration
(Copy for Service Station)

Name: _____

Address: _____

Model: _____

Chassis No.: _____

Engine No.: _____

Registered No.: _____

Registered date: _____

Truck-sale inspection date: _____

Sales company: _____

(Signature): _____

Service unit: _____

Duplicate of Registration
(Copy for the Owner)

Name: _____

Address: _____

Model: _____

Chassis No.: _____

Engine No.: _____

Registered No.: _____

Registered date: _____

Truck-sale inspection date: _____

Sales company: _____

(Signature): _____

Service unit: _____

Table of Contents

Table of contents of each chapter is given on the first page of each chapter in this Instruction Manual.

Information for Drivers

Chassis No. and Engine No.

When making contacts for maintenance and ordering, the service can be obtained smoothly by using the following numbers.

Chassis No. and engine No. 04519

► Chassis No.

It is directly stamped on the frame of the truck, located at the middle-front end of the right longitudinal beam of the frame.

The meaning of Chassis No. is described as follows:

For example, LZ5 M 1 A B 1 1 1 A 000001

① ② ③ ④ ⑤ ⑥ ⑦ ⑧ ⑨ ⑩

① Name of manufacturer
② Type of driver's cab
③ Model of truck
④ Type of engine
⑤ Max. total mass, and the length of vehicle
⑥ Driving mode and braking mode
⑦ Inspection bit
⑧ Year
⑨ Assembling plant
⑩ Serial No.

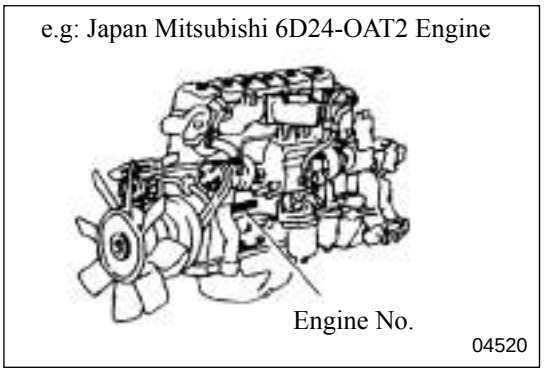

► Engine No.

Engine No. is stamped on the left side of the crankshaft case.

e.g.:6D24- □□□□□□

Engine No.

Engine Model

Location of the Engine No. varies with the different models of the engines. For the real location, see the actual engine.

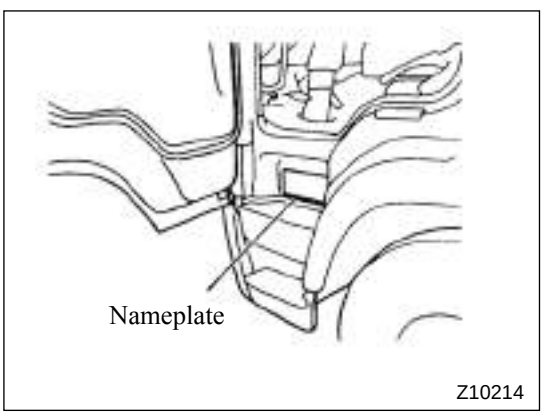

Nameplate

Nameplate is fixed above the second step for the right door with rivets.

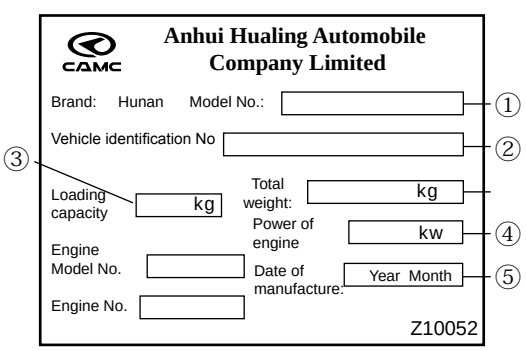

Following information is indicated on the nameplate:

① Model No.:

② VIN Code

③ Total weight and loading capacity of truck

④ Rated output

⑤ Date of manufacture:

e.g. April, 2003: It is indicated as 2003.04

Inspection of Vehicle

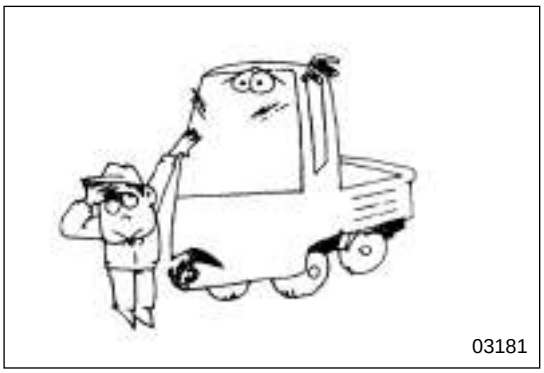
03181

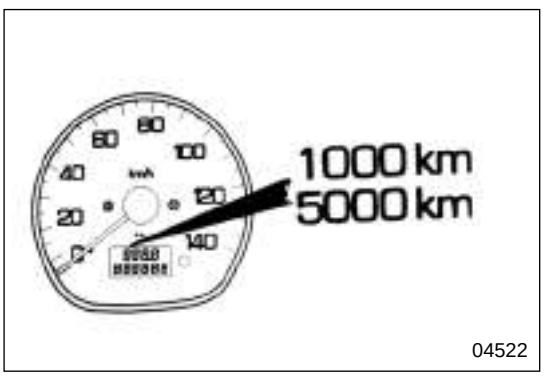

04522

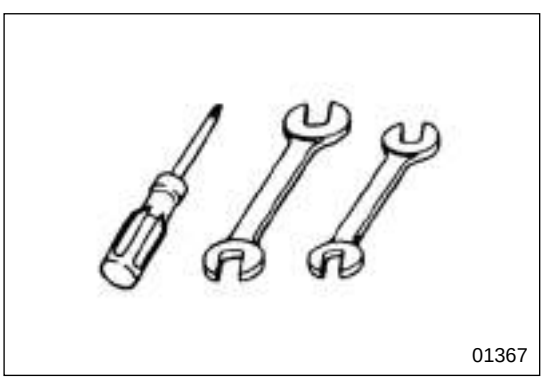
01367

Inspections and maintenances must be made in order to fully have the performances of the vehicle and extend the service life. The following inspections shall be performed periodically.

► Inspection of new vehicle

When a new vehicle has been run for a mileage of 2,000 - 4,000km, it is necessary to carry out a run-in maintenance to meet the requirements for the initial run-in of all parts, etc. Please go to the nearest Hualing Automobile service station to make this inspection.

► Check prior to dispatching a vehicle

In order to have a safe and comfortable drive constantly, check prior to dispatching a vehicle shall be made each time when the vehicle is dispatched.

► Periodical inspection

The inspection contents are specified according to the mileage or the use time. In case the vehicle runs under the harsh conditions, the inspection frequency shall be increased. For the inspection intervals and items, refer to the Regular Checklist.
It is recommended by our Company that the special parts (e.g. brake hose, fuel hose, brake gear oil seals, etc.) shall be replaced periodically in order to ensure safe driving.
It is very difficult to determine whether these parts are good or not through the periodical inspections, and therefore, the inspection frequency shall be increase properly for the vehicles that run under harsh conditions.
The maintenance and inspection items of rubber hoses (of the braking system, fuel system and power steering system) are particularly important. Usually aging, expansion, wear and tear and cracking occur to the rubber hoses. Therefore, the contents listed in the checklist shall be inspected periodically, and the inspection shall be made by the special technicians.
Periodic replacement shall be made in order to ensure the safety. The aged or damaged rubber hoses shall be replaced timely. For the interval of replacement of these parts, refer to the Regular Checklist".

Fuel to Be Used

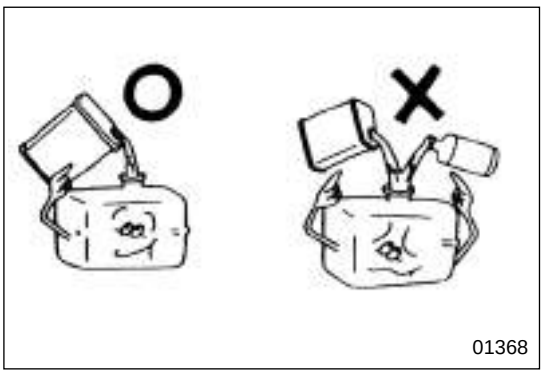

01368

► Selection of fuel oil

Specified diesel oil shall be used.
Diesel oil in conformity with the local air temperature shall be used in the cold area.

Warning ⚠

It shall be avoided absolutely to use the fuel oil other than the diesel oil or the diesel oil mixed with gasoline or alcohol, etc., for the diesel engine vehicles, otherwise there will be a danger to cause a fire and even an explosion.

► Refilling the fuel oil

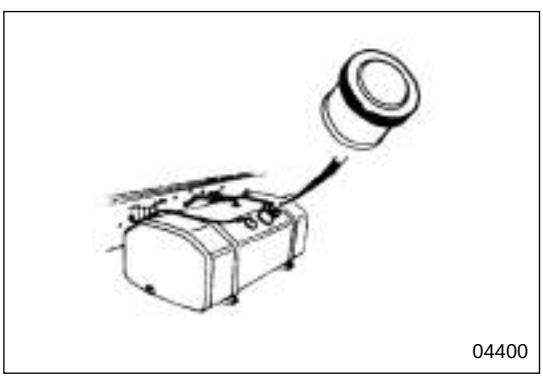
04400

Warning ⚠

Before refilling the fuel, the engine must be stopped and the cigarette and all open fires, etc., shall be died out.

► Caution ⚠

When refilling the fuel, care shall be taken to prevent the dust and water-drops from entering the fuel tank.

- Clean the cap of the fuel tank and the section around it by wiping.
- Turn the cap of the fuel tank anticlockwise to remove it. After the fuel tank is refilled, the cap shall be screwed on and tightened.

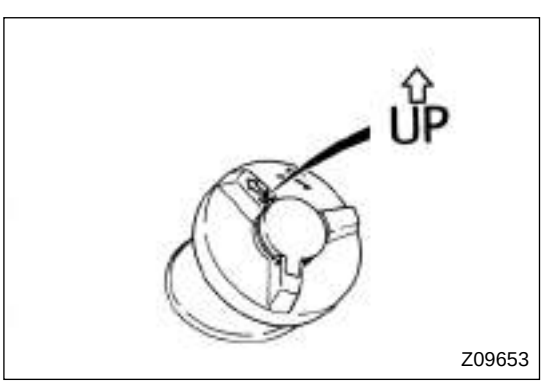

Z09653

► Removal and assemblage of lockable cap of the fuel tank

After the cap of the fuel tank is put into place, the mark “UP” shall be on the upper part (toward the center of the vehicle). In case the mark is not in this position, it shows that the cap of the fuel tank is not replaced properly.

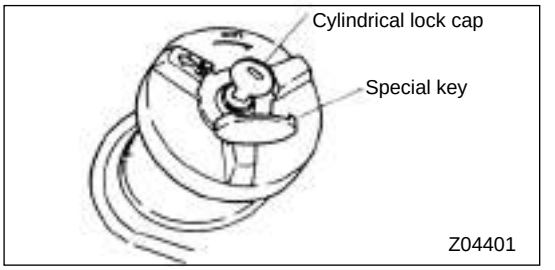

1. Open the cylindrical lock cap and insert the key into the key hole.

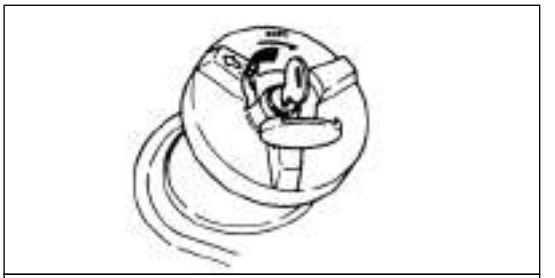

2. Turn the key anticlockwise.

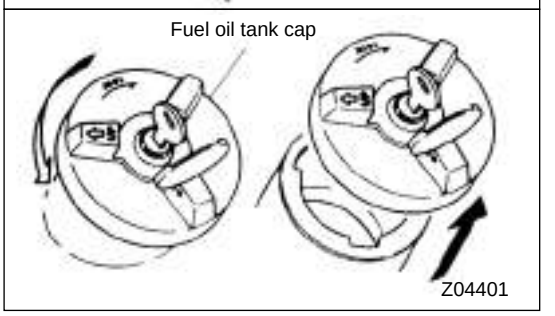

3. Turn the fuel oil tank cap anticlockwise to remove it from the tank. After the tank is refilled, screw on the fuel tank cap tightly and turn the key to lock it up.

Operating Methods for a New Vehicle

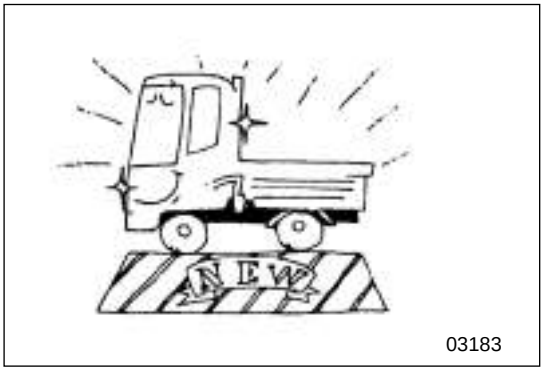

Operation methods for a new vehicle will exert a great effect on the performance and the service life of the vehicle in the future. Therefore, the follow matters must be observed strictly.

► Check maintenance

Run-in check for a new vehicle is an very important maintenance for the vehicle to extend the service life. This run-in check maintenance shall be executed by the nearest Hualing Automobile Service Station according to the specification “Initial Maintenance during Run-in Period of a New Vehicle”.

During the initial run-in period, various types of oil may be deteriorated soon. The following engine oil and filter elements shall be replaced when carrying out “Check Maintenance for a New Vehicle”.

At a mileage of 2,000 - 4,000 km,

- Engine oil
- Filter element of engine oil filter (except for the by-pass filer)
- Transmission oil
- Differential gear oil
- Power steering gear oil (if the material of the hydraulic fluid tank is resin, replace the hydraulic oil filter inside the tank. If the material of the hydraulic fluid tank is metal, clean the hydraulic oil filter inside the tank.)

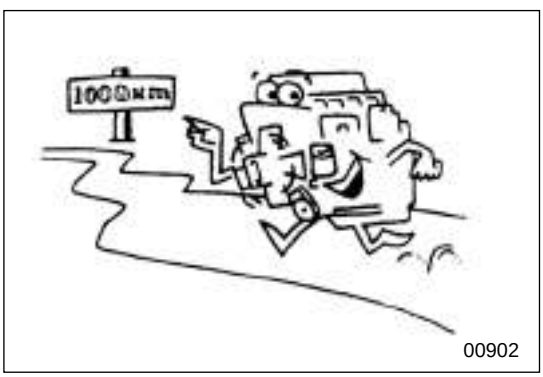

00902

► Max. speed of engine during run-in period

Within the initial mileage of 1,000 km, the engine shall be limited to a running speed below 1,500 rpm and the rough and forced driving operations shall be avoided. Afterwards, a run-in operation from a low speed to a higher speed shall be gradually performed.

To Prevent Troubles and Accidents

- The engine oil shall be replaced periodically. If the deteriorated engine oil is still used, the serious troubles e.g. seizing of bearings, etc., may be resulted in.

The grease and lubrication oil recommended in this Operation Instructions must be used. In case the types of grease and oil other than the recommended products are used, the troubles may be resulted in.

- The filters and filter elements shall be cleaned or replaced periodically. In case the clogged or damaged filters and filter elements are used continuously, the phenomenon of power decrease, abnormality of engine, etc., will be incurred.
- When making replacement of parts, the genuine parts of Hualing shall be used. Our manufacturer shall assure the quality of Hualing genuine parts, and therefore, they can be used without any worry.

Caution ⚠

The warranties shall become inapplicable in case

01979

the problems or accidents are resulted from the parts other than the genuine parts or the recommended parts used.

● When starting up the engine, the engine must not be running continuously for more than 15 seconds absolutely, otherwise over - discharge of battery or agglomeration damages to engine may be caused.

● When starting to run, the clutch shall be engaged slowly. If the clutch is engaged too fast, all parts of the body assembly may be subject to too great stresses, and the service life of the clutch will be shortened.

● It is not allowed to put the foot onto the pedal of the clutch for a long time, otherwise the clutch will be caused to be in a semi-engaged state, and it will not only cause the power to be insufficient, it will also cause the wear-out of friction disc of the clutch and thus shorten the service life of the clutch.

● The clutch is not allowed to slip for a too long time, otherwise the service life of the friction disc of the clutch will be shortened.

● When running on bad road, the running speed of vehicle shall be decreased and the rough pavement shall be avoided.

● When the truck is caught in a mud pit and loses the traction, the wheels of the truck must not be kept idle for a long time. Gunnysacks and the like shall be put under the wheels to make the truck be driven out.

● During driving , the clutch must not be cut off or the gear shift lever shall not be pushed into the neutral.

Furthermore, during driving, the engine is not allowed to be cut off.

Warning ⚠

During driving, if the engine is cut off, the braking effect of vehicle will be decreased remarkably and the operation of steering wheel will become more difficult , and it is very dangerous.

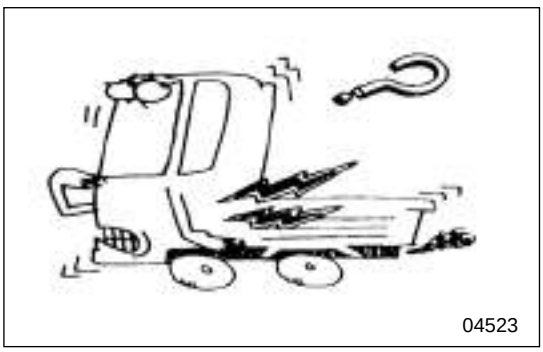

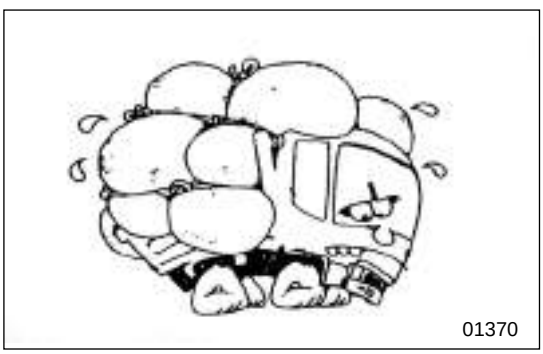

- In case the abnormal noise, peculiar smell or abnormal vibration are found, the truck shall be stopped at once to make a check.
- When climbing up or running down a slope, pay attention to the use of the shifter positions in order to avoid over-speed of the engine that will result in the vehicle running at an out-of-control speed.
- When running down on a slope, the engine braking device and the exhaust braking device shall be used effectively.
- If the warning lamp is flashing, the vehicle shall be stopped and parked in a safe place and the safety measures shall be taken.
- During cold days, all types of machine oil shall be changed by the types of the machine oil with a viscosity which is in inconformity with the outdoor air temperature. Besides, the concentration of the coolant, the specific gravity of battery acid and the concentration of cleaning mixture for the windshield, etc., shall be checked.
- It is not allowed to over-load the truck, otherwise there will be detrimental effect on all parts of the vehicle, and the service life shall be shortened therefore. Moreover, wrong loading methods for cargo will not only cause the cargo to slide, but also make the cargo be concentrated on a certain point, and as a result, the carriage, frame, etc., of the truck will be damaged.

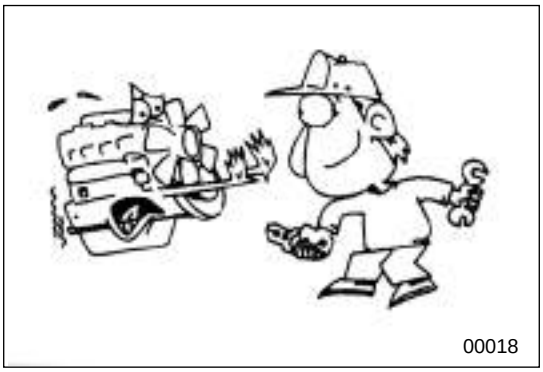

Warning ⚠

- After the cargo is covered with canvas or tied up with ropes, the fringe of the canvas or rope ends must not be suspended between the driver's cab and the carriage, otherwise, the heat emitted from the engine may cause a fire.
- When the canvas is used for covering the cargo, the canvas shall not be allowed to cover the air inlet pipe of the engine or be sucked by it.
- When carrying heavy and large-size cargoes, anti-displacement measures shall be taken and steel wire-rope shall be used to tie the cargos tightly in order to protect the cargos from sliding and displacement.

- A state of fully turning the steering wheel to one side shall not be maintained for more than 10 seconds, otherwise there will be a risk of troubles on the power steering device.
- Before the vehicle leaves the factory, the engine is adjusted to the optimum state. Therefore, the users are absolutely not allowed to make any adjustment to the engine without permission, otherwise the performance of the engine will be lowered and meanwhile detrimental effects on the exhaust and noise will be resulted from.

● The vehicle is provided with the electronic devices. Although measures to prevent electromagnetic interference are taken, when the user is going to install the equipment that will generate strong electric waves e.g. radio, etc., the user shall consult the nearest Hualing Automobile Service Station.

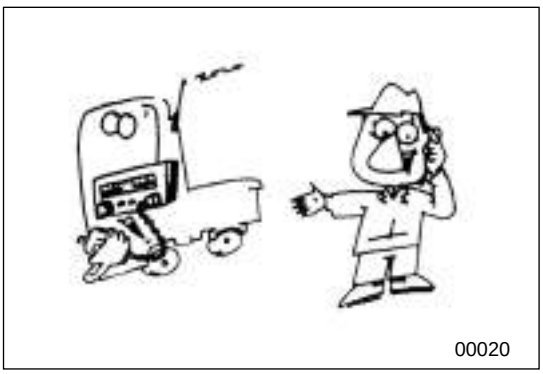
00020

Note

Operation voltage of the most of the mobile radios is 12V. Therefore the radios can not be directly connected to the 24V power of the vehicle. If it is intended to install such electrical apparatus, consultations shall be made with the nearest Hualing Automobile Service Station.

● Electric apparatus shall not be connected or added at random. When wiring is added, consultations shall be made with the nearest Hualing Automobile Service Station.

Warning ⚠

In case an improper wiring is made for a commercial electric apparatus product, malfunctions of the existing devices of the vehicle may be caused or a fire will be resulted from overheating of the wiring. It is extremely dangerous.

● When the outfit such as the top cargo rack or top wind deflector, etc., is installed at the top of the driver's cab, the special mounting holes at the top shall be used for fixing. The weight of the outfit to be installed shall be limited to < 50kg.

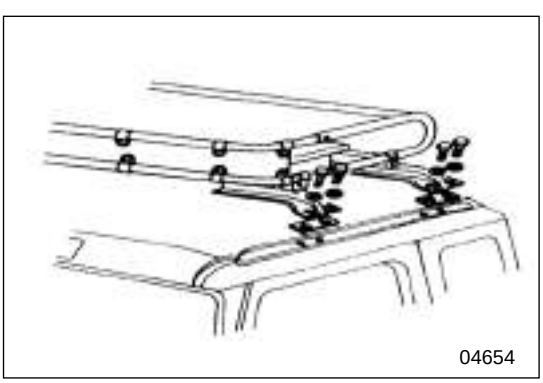
04654

● When the outfit is installed at the top of the driver's cab, the specified bolts (M8×1.25), washers, rubber gaskets, etc., shall be used.

After installation, sealant shall be applied around the bolts.

For the details, consult the nearest Hualing Automobile Service Station.

Opening and Closing of Doors and Windows

04351

Starting Key

Each vehicle is provided with three starting keys of a size. With this key, the engine can be started up and shut down and the doors of the truck can be locked and unlocked.

Z10054

Warning ⚠

If the other keys are hung to the starting key, the other keys should be separated from the starting key with a 50mm chain so as to avoid intertwining of the keys.

Doors

Warning ⚠

● Before opening the door, it must be confirmed that there is no pedestrian or follow-up vehicle, etc. nearby.

● It is extremely dangerous to drive the truck with the door being half-open. When starting, it must be confirmed that the doors of the truck are closed safely.

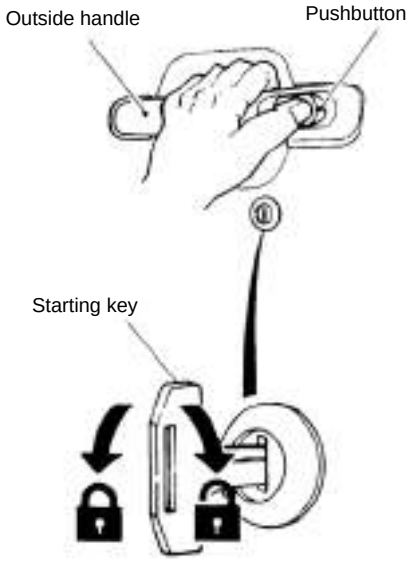

04352

► Operations outside truck

● Press the pushbutton and then pull the outside handle.

● Use the starting key to lock/unlock the door.

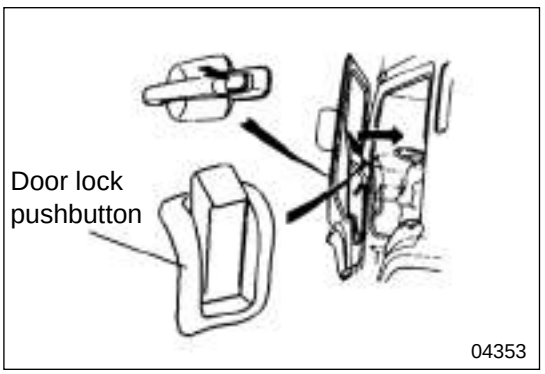

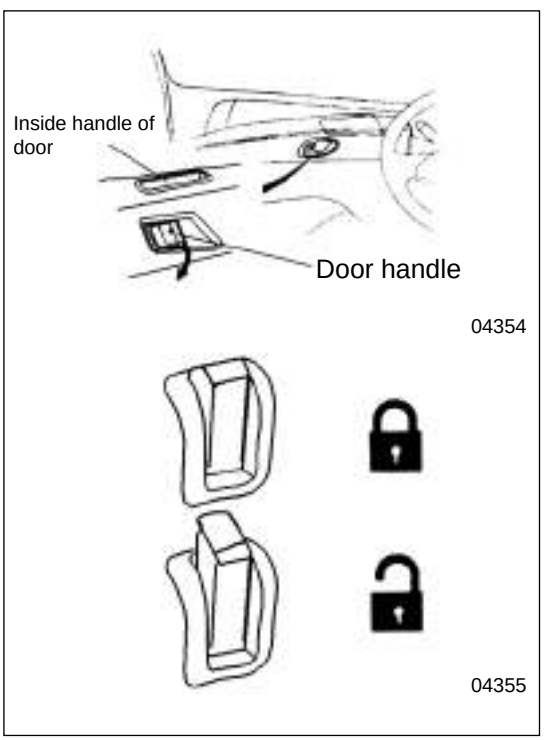

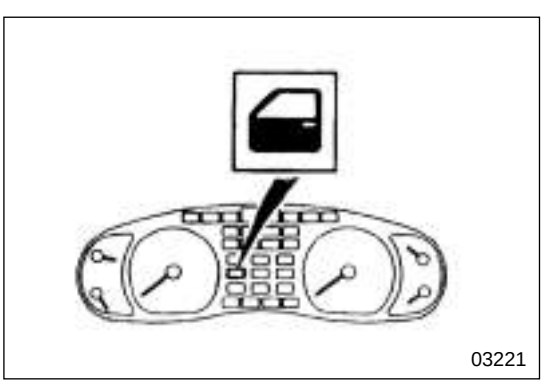

● When locking the doors without using the starting key, press down the door lock inside the door to the locking position and then close the door with the pushbutton on the outside handle pressed.

Note

● When leaving the truck, the key must be removed from the starting switch in order to prevent the vehicle from being stolen.

● When locking the door without using the starting key, the starting key must be removed from the starting switch, otherwise it will cause that the door can not be opened.

► Operations inside truck

● When closing the door, pull and draw the inside handle of the door. The door must be closed completely.

● Press down the door lock pushbutton to lock the door. When the lock pushbutton is pulled up, the door is unlocked.

● When opening the door of the truck, pull and draw the door handle and push the door outward.

Caution ⚠

When closing the door of the truck, the inside handle of door must be pulled and drawn. Pulling or drawing other parts may result in the damages to the door mechanism.

► When door is at an open position

When the starting key is in the ON position and the door of truck is in an open state or a half-open state, the indicating lamp on the dashboard will light up.

In case the door is not completely closed, the door shall be closed first before running the truck.

Caution ⚠

If the inside lamp switch is pressed, the inside lamp will light up whenever the door is opened.

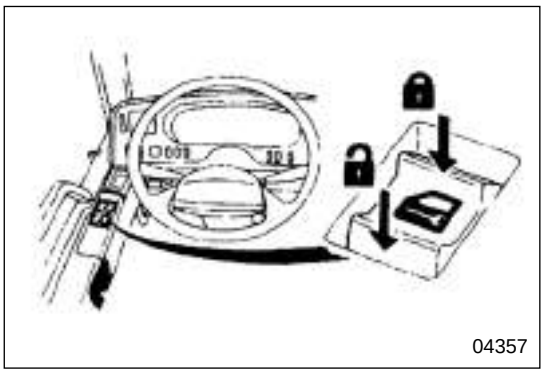

► Central control door-lock switch

With the central control door-lock switch pressed, it is possible to lock or unlock the doors on both right and left sides at the same time.

The vehicle equipped with a central control door-lock switch is also provided with the following functions:

● As the lock pushbutton of the door at the driver's side is pressed, the door at the assistant driver's side will also be locked automatically.

When unlocking the door, if the lock pushbutton of the door at the driver's side or the assistant driver's side is pulled up, it is only possible to unlock the door with the lock pushbutton pulled up.

● As the starting key is used to lock up the door at the driver's side from the outside, the door at the assistant driver's side will also be locked automatically When the starting key is used to unlock the lock, it is only possible to open the door that the key is used.

Glass of Doors

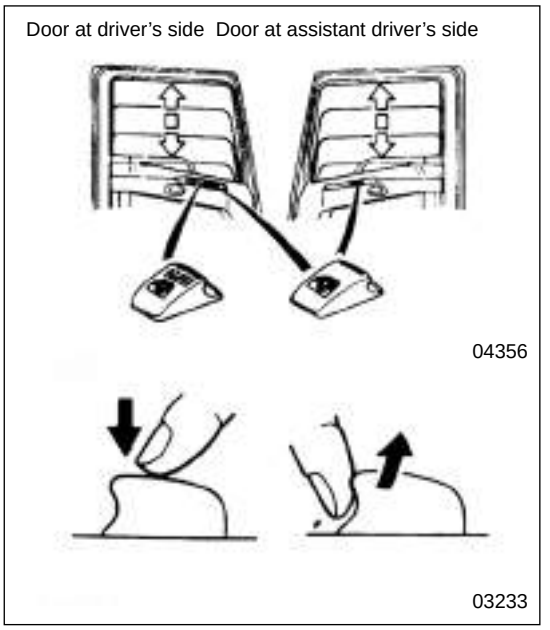

► Power window provided as a standard part of the truck

When the starting key is at the ON position, the power window switch can be used to unlock or lock windows.

Warning ⚠

● When closing the window, it must be confirmed that nobody leans out of the window, otherwise injuries to the body will be caused.

● Children are absolutely not allowed to open or close the door by themselves.

When this switch is pressed down, the window can be opened and when this switch is pulled over, the window is closed. As soon as the switch is released, the motion of the window will be stopped immediately.

Caution ⚠

Moisture entrapped in the power window switch

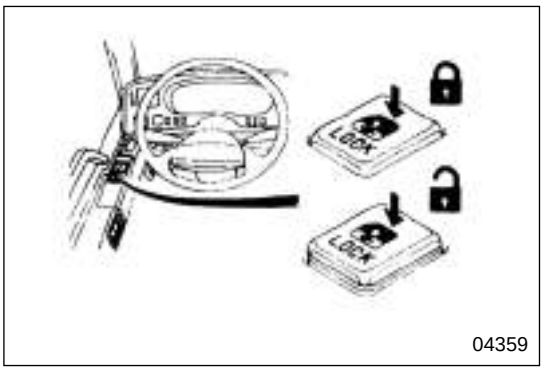

04359

will cause the fault to the switch. Care shall be taken not to splash drinks, etc., on the switch. When it is raining, doors and windows of the truck shall be closed.

► Window locking switch

With the window locking switch pressed, it is possible to prevent the window at the assistant driver's side from opening and closing.
When the switch is pressed again, this function can be cancelled.

Caution ⚠

Moisture entrapped in the power window switch will cause the fault to the switch. Care shall be taken not to splash drinks, etc., on the switch. When it is raining, doors and windows of the truck shall be closed.

Adjustment of Seat and Steering Wheel

Seat

Warning ⚠

- If adjusting the seat when the truck is in motion, sometimes the seat will slide to cause a danger. Therefore, the adjustment of the seat shall be made after the truck is stopped and the handle of the parking brake is pulled up.
- After the adjustment is made, gently shake the seat to check whether the seat is fixed reliably.

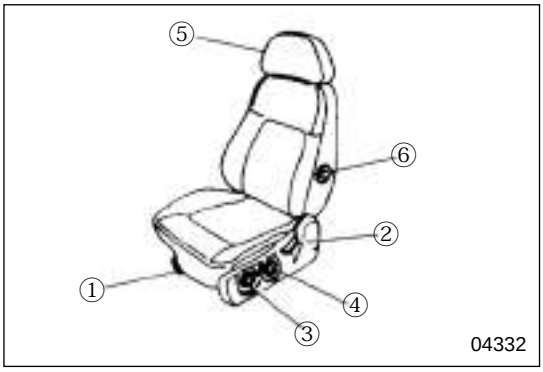

► Driver's seat

① Adjusting handle for moving forward and backward
② Adjusting handle for seat backrest angle
③ Adjusting handle for front side height
④ Adjusting handle for rear side height
⑤ Headrest
⑥ Adjusting handle for waist cushion

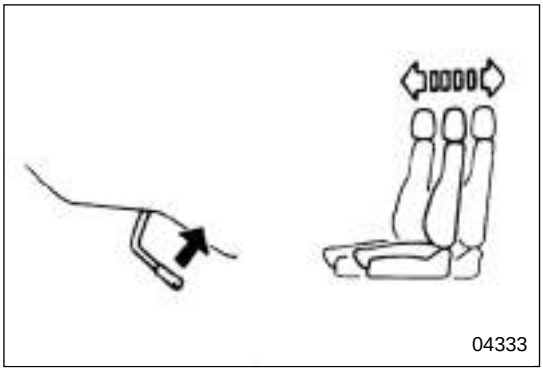

- Adjustment of forward position and backward position

Pull the adjusting handle to make the seat move forward or backward.

- Adjustment of seat back angle

Warning ⚠

When adjusting the backrest angle, you should sit down on the seat to press the seat backrest, or hold down the seat backrest with your hand. If the backrest is not pressed, the seat backrest will rebound abruptly to the front to bump against your face, etc.

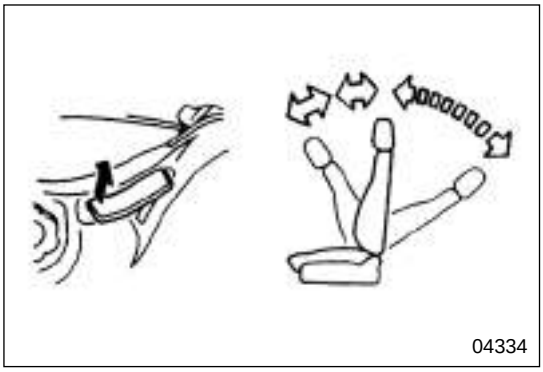

It is possible to change the angle of the seat back by pulling and drawing the adjusting handle for seat backrest.

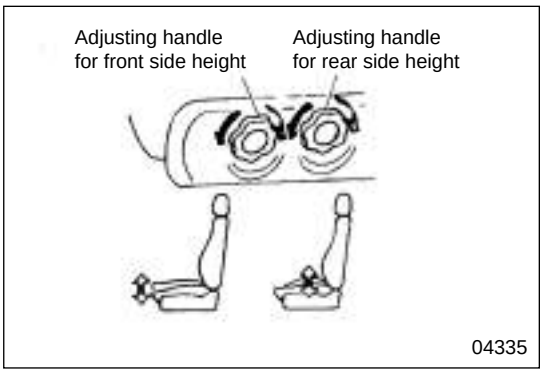

● Adjustment of seat height

When turning the adjusting handle for the front side height or the adjusting handle for the rear side height, it is possible to adjust the heights of the front side or the rear side of the seat as well as the angle of the seat surface.

● Headrest

Warning ⚠

The headrest must be adjusted to an appropriate position and fixed reliably.

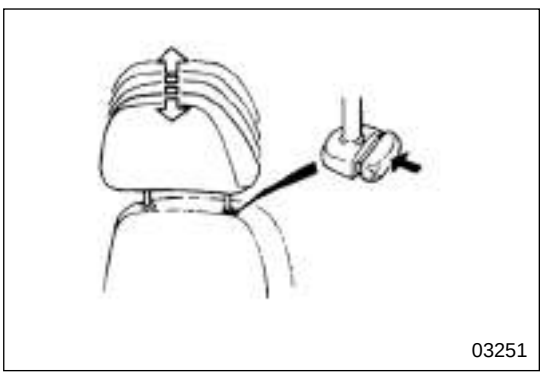

Adjustment of headrest height

Adjust the height of the headrest to allow it to be located at the center of your head. When raising the headrest position, pull it upward to adjust the position of the headrest.

When lowering the position of headrest, press down the headrest pushbutton while pressing down the headrest.

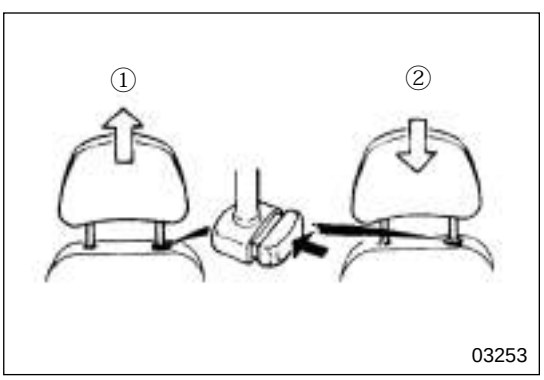

Removing and installation of headrest

① When removing the headrest, pull it to the upper limit, and then remove the headrest from the seat while pressing down the pushbutton of headrest.

② To replacing the headrest, insert it into the seat and lower it to the locking position while pressing down the headrest pushbutton.

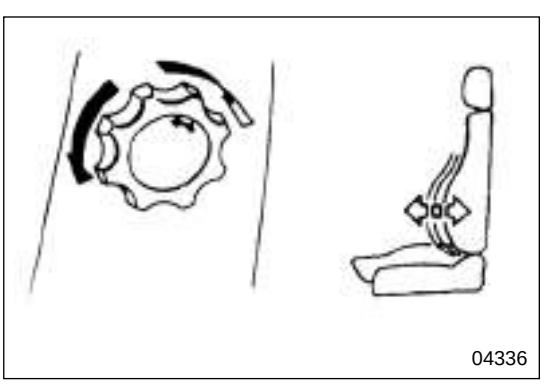

● Waist cushion (optional)

Turn the adjusting handle for waist cushion to adjust the hardness of the cushion.

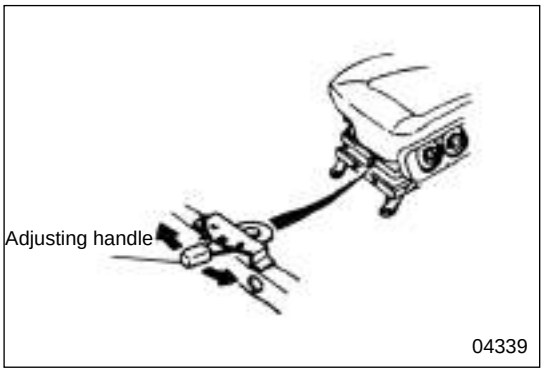

● Air cushioned seat (optional)

Air pressure will be adjusted automatically according to the body weight of passenger.

The adjusting handle is used to select the most comfortable condition according to the pavement conditions of the road. There are three handle positions for the road conditions as follows:

S: The soft position suitable for the asphalt road;

M: The medium-hardness position suitable for the ordinary road;

H: The hardest position suitable for the uneven road to reduce body shaking of passenger

► Assistant driver's seat

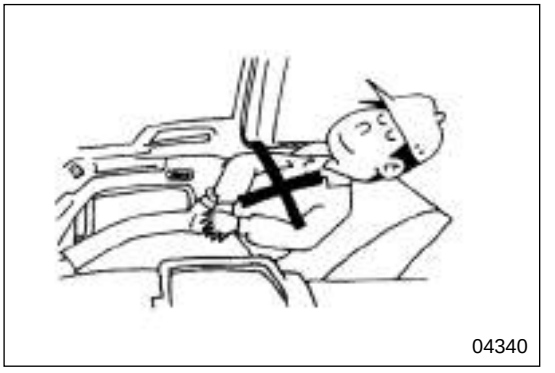

Warning ⚠

When the truck is in motion, the seat back should not be inclined too much; otherwise the body of passenger will slide out of the seat resulting in a serious injury in case the brake is applied rapidly.

● Adjustment of seat angle

Warning ⚠

When adjusting the backrest angle, you should sit down on the seat to press the seat backrest, or hold down the seat backrest with your hand. If the backrest is not pressed, the seat backrest will rebound abruptly to the front to bump against your face, etc.

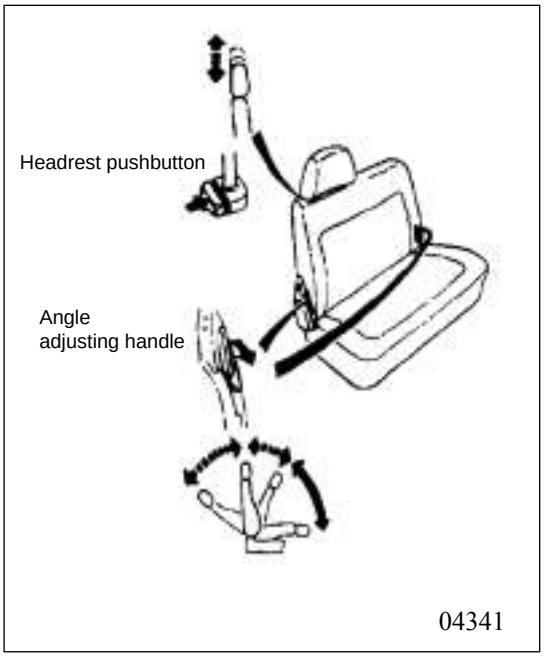

Pull and draw the angle adjusting handle to change the angle of the seat back.

● Headrest

Warning ⚠

The headrest must be adjusted to an appropriate position and fixed reliably.

● Adjustment of headrest height

Adjust the height of the headrest to allow it to be located at the center of your head. When raising the headrest position, pull it upward to adjust the position of the headrest.

When lowering the position of headrest, press down the headrest pushbutton while pressing down the headrest.

● Removing and installation of headrest

The methods for removing and installation of the headrest of the assistant driver's seat are as same as that for the driver's seat.

Seatbelt

It is particularly important to use the seatbelt in a right way to reduce the bumping accidents or the injuries that may probably occur during the sudden braking. Before the truck is going to start, it must be confirmed that all passengers have fastened the seatbelts properly.

Warning ⚠

● It is extremely dangerous to release or fasten the seatbelt when the truck is in motion. The seatbelt must be fastened or released when the truck stops.

● One seatbelt can not be shared by two persons.

● Pay attention to the wear and tear seatbelt. Such seatbelt is not only ineffective, but also very dangerous.

● When fastening the seatbelt, sit regularly in the seat to allow your back lean tightly on the seat back. If the sitting posture is not regular; the protection function of the seatbelt would be reduced.

● During the motion of the truck, the seat back must not be inclined too much, otherwise when there is a bumping, the body of passenger will come out of the seatbelt to hang up the neck resulting in such serious injuries as the vertebrae cervical break, etc.

● The waistband of the seatbelt must be attached to the bones in order to protect the belly from injury resulting from pressing that may occur during

bumping. Attention should also be attached to positioning the shoulder band of the belt, and don't attach it to the neck.

- When fastening the seatbelt, it must be confirmed that the belt is not twisted and askew. Since the twisted and askew section is of a smaller area, too great local pressure will be exerted onto the body to cause a danger.
- In case the seatbelt has got worn, open stitches or fail of belt buckle, etc., it shall be replaced immediately.
- In case there occurs a bumping accident and the seatbelt has been subjected to the shock power, the seatbelt should still be replaced even if not any damage is found on the seatbelt. Although there is only a light bumping, it is also necessary to go to the nearest Hualing Automobile Service Station to make an inspection to the seatbelt.
- It is not allowed to insert any foreign matter into the belt buckle part or the rewinding mechanism of the seatbelt, nor to modify or remove the seatbelt. Such construction will be the cause for no function of the seatbelt when a bumping happens.
- Because the seatbelt will probably exert a great pressure onto the passenger's belly, inquiries about the pregnant women or patients shall be made to the doctors in advance to confirm that fastening seatbelt will not be a threat to health.
- For the children who can not sit alone, or the seatbelt will be in contact with their necks, faces, jaws, etc., the special seat for children shall be used.

Caution ⚠

When the seatbelt is contaminated, neutral detergent shall be used to clean it. It is not allowed to use de-colorant, colorant, or dry cleaning agent, etc., for cleaning, otherwise its strength will be impaired seriously.

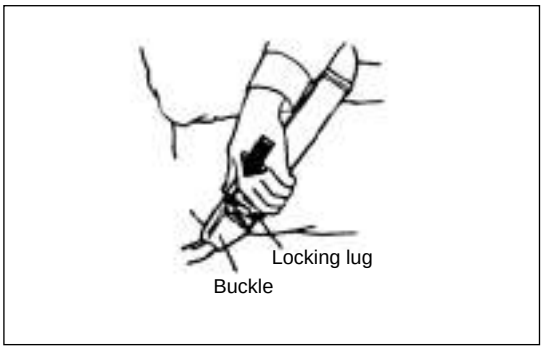

► Three-point emergency locking retractable(ELR)seatbelt

- Seatbelt (safety waist belt)

1.Adjust the seat position according to the needs. Sit regular in the seat to allow the upper part of the body press tightly against the seatback.

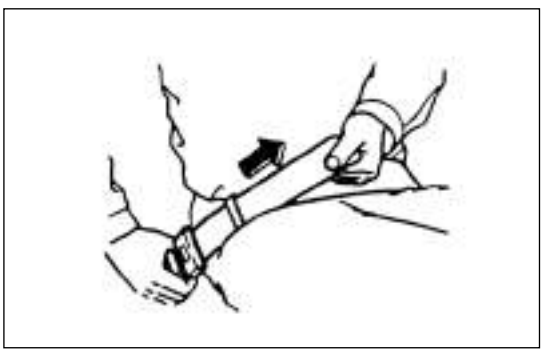

2.Hold the locking lug and make it go round the body and then insert the locking lug into the buckle. When the locking lug is inserted into the place, a “click” can be heard.

- It shall be confirmed that the seatbelt is attached to the hip at the lower position instead of the waist.
- The length of seatbelt can be adjusted only by pulling the belt at the locking lug end.

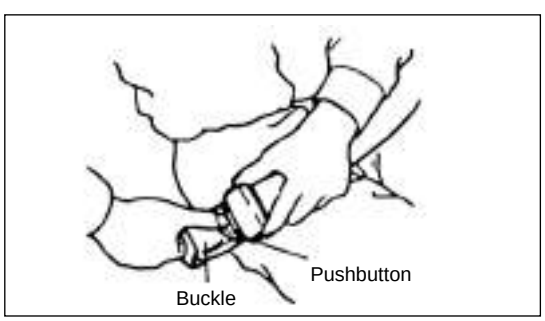

3.Press down the pushbutton on the buckle to unfasten the seatbelt.

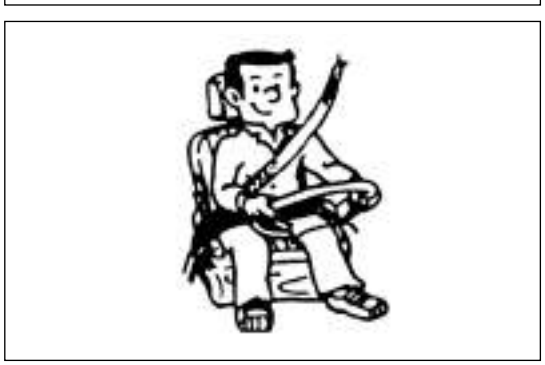

► Composite shoulder and waist belt for front seat

Your motor vehicle may have a 3-bearing point, composite shoulder and waist seatbelt which is provided as an option. For the use method for the above-mentioned seatbelt, please refer to the following information and observe them accurately.

1.Adjust the seat to a position that the driver feels comfortable. When sitting in the seat, the upper part of the body shall press tightly against the seatback.

2.Hold the lug (L) of buckle of the seatbelt and pull the composite seatbelt over the body. At this moment, the lug together with the seatbelt shall be drawn to the buckle (B) position. Insert it into the open end of the buckle until a “click” is heard.

Caution ⚠

It is very important to attach the seatbelt tightly onto the body and lower its location, because when a collision happens, the force generated from the waist band will be distributed over the relatively strong pelvis instead of belly. If the seatbelt is not fastened, serious casualty accident will be caused when a traffic accident happens.

The section of seatbelt across the waist shall be pressed down to allow it to be as close to the pelvis as possible, and then fasten the shoulder section of the belt that passes through the lug of the buckle to allow the belt to be pressed against the waist. Thus it is possible to reduce the risk that the body will come out from the seatbelt when the traffic accident happens.

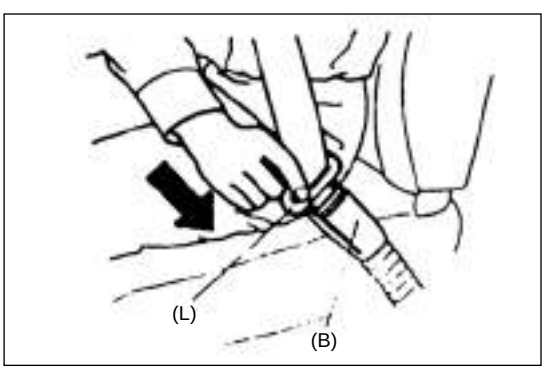

Caution ⚠

It is absolutely not allowed to share a seatbelt by two persons in order to avoid injuries when a traffic accident happens. Care shall be taken to avoid the wear and tear of seatbelt due to twist or being nipped by any metal parts of the seat or door.

A so-called “vehicle sensing withdrawing device” is provided for the shoulder belt of the front seat belt. The design characteristics of this device are that the belt will not be fastened unless there happens a rapid braking or a bumping of the truck, while the belt can slide freely with the movement of the person who wears it. If the pushbutton in the center of the buckle is pressed down, the seatbelt can be released.

If the seatbelt is not used, it can be rewound up into the withdrawn device for storage. If necessary, the positioning buckle on the belt can be moved to allow the belt to be re-wound up completely into the

withdrawing device. In this case, the lug of buckle of the belt can be hung on the easily accessible door pillar.

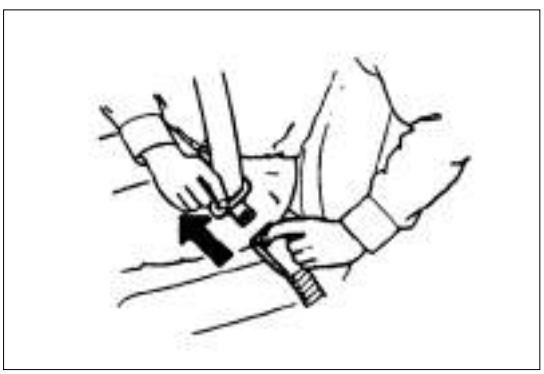

► Inspection and maintenance of seatbelt

● The belt, buckle, lug of buckle, belt withdrawing device, bearing, etc., shall be checked periodically for any damage in order to avoid the reduction of safety effect.

● Objects that have sharp edges or will cause the damages to the belt should not be placed nearby the seatbelt, otherwise the damages will be caused to the seatbelt.

● In case the seatbelt is found to have cut-outs, weakening, cracks or have been subjected to bumping load, it shall be replaced.

● Check the fixing bolts of the bearing to see whether they are fastened solidly onto the floor board.

● Any part with a problem found shall be replaced.

● Seatbelt shall be kept clean and dry.

● Only mild-base soap solution and warm water can be used for cleaning.

● Decolorizing or colorizing must not be made to the seat belt, otherwise the strength of the seatbelt will be lowered.

● Release of seatbelt

Pressing down the red pushbutton, the seatbelt will be rewound up automatically. During rewinding of the seatbelt, the locking lug shall be held by hand for rewinding.

Note

The angle of seatback can be changed by pulling and drawing the angle adjusting handle.

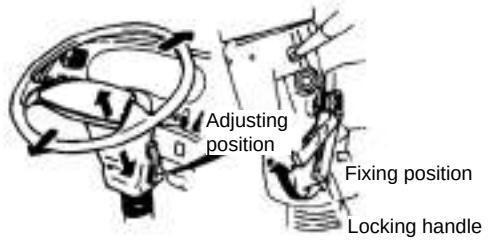

04346

Steering Wheel

Raise the locking handle to the adjusting position to adjust the height and inclination angle of the steering wheel. After the adjustment is made, press down the locking handle to fix the position of the steering wheel.

Warning ⚠

- After the adjustment is made, the steering wheel shall be shaken to check for a reliable fixing.
- When the truck is in motion, it is absolutely not allowed to adjust the position of steering wheel, otherwise the extremely dangerous circumstances will occur.

Switches and Operating Devices

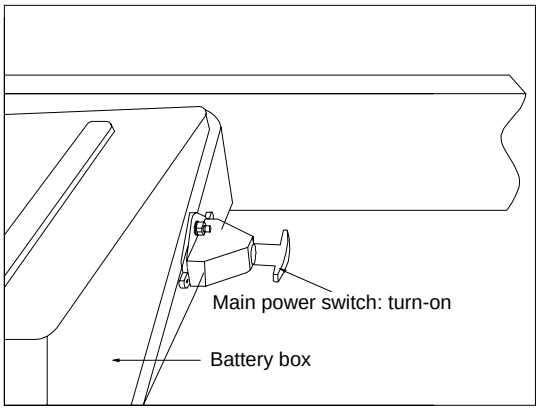

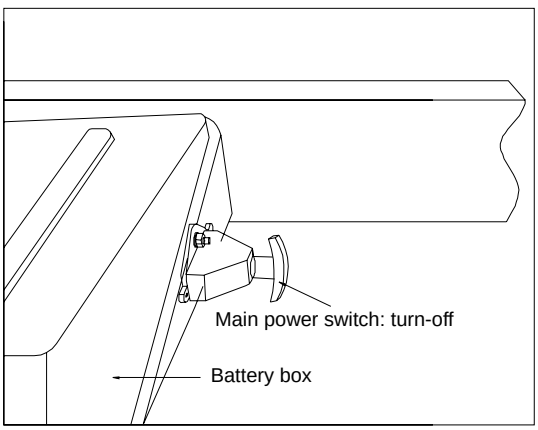

Main Power Switch

AH vehicle is provided with main power switch locating at right side of battery box which controls the negative pole of vehicle.

When main power switch handle is in parallel with ground the negative cable will be connected with negative pole of battery. Thus electric system of vehicle can be energized through ignition switch and electric apparatus can work (some vehicle types have no hand-operated main power switch).

When main power switch handle is perpendicular to ground, the negative cable will be disconnected with negative pole of battery. Thus the whole vehicle will be disenergized (some vehicle types have no hand-operated main power switch).

Caution: ⚠

Before driving main power switch handle must be in parallel with ground and electric system can thus work normally.

When stop the main power switch handle must be perpendicular to ground and electric system can thus stop working.

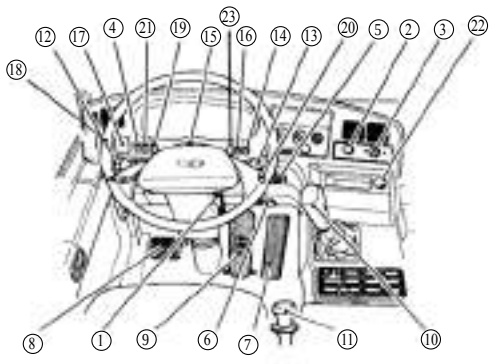

Z10076

Switch Arrangement of Cummins

（1）starting switch
（2）preheater switch
（3）preheating indicator
（4）cold starting switch(for different vehicle it will be in different position or absent)
（5）empty
（6）emergency stop handle of engine
（7）accelerator pedal
（8）clutch pedal
（9）brake pedal
（10）gear lever
（11）parking brake handle
（12）Combined switch left handle
（12）Left and right steering signal indicator switch
（12）light control switch
（12）headlight variation switch
（12）night light switch
（13）combined switch right handle
- exhaust brake switch
- windshield wiper switch
- windshield cleaner switch
- alarming lamp switch

（14）working lamp switch (dump truck type)
（15）front fog lamp switch
（16）non-dump truck type:working lamp switch
（16）dump truck type: PTO switch
（17）inter-axle differential lock switch
（18）inter-wheel differential lock switch (only suitable for vehicles with inter-wheel differential)
（19）speed lamp inspection switch
（20）empty
（21）rear fog lamp switch
（22）cigarette igniter
（23）electric horn switch

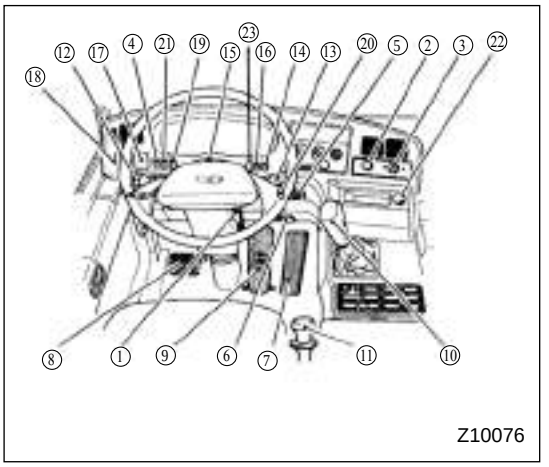

Switch Arrangement of Weichai Diesel Engine

（1）starting switch
（2）preheater switch
（3）empty
（4）cold starting switch (depending on vehicle types) or working lamp switch
（5）empty
（6）emergency stop handle of engine
（7）accelerator pedal
（8）clutch pedal
（9）brake pedal
（10）gear lever
（11）parking brake valve handle
（12）combined switch left handle
- steering signal indicator switch
- lamp control switch
- headlight variation switch
- overtaking lamp switch

（13）combined switch right handle
- exhaust stop switch
- wind shield wiper switch
- wind shield cleaner switch
- alarming lamp switch

（14）stall switch
（15）front fog light switch
（16）working lamp switch (part of types)
Dump truck type: PTO switch
（17）interaxle differential lock switch
（18）interwheel differential lock switch (only suitable for vehicles with inter-wheel differential)
（19）speed lamp inspection switch
（20）empty
（21）rear fog lamp switch
（22）cigarette igniter
（23）electric horn switch

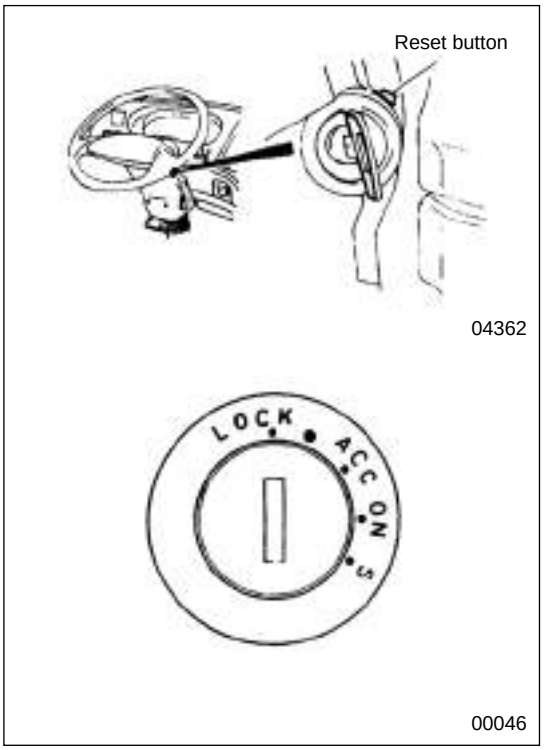

Starting Switch

Warning ⚠

Starting key must be kept at ON position in riding and never be changed into any other position. In case of changing to ACC the following abnormality shall occur:

- loss of braking function of engine and exhaust
- heavy steering operation and failure.
- loss of function of electric system resulting in failure of parts of apparatus.

If taking out starting key steering wheel will be locked and unable to change vehicle steering.

LOCK：Position to insert or take out the key. The key shall be turned to the mark position between ACC and LOCK before turning to LOCK position and press reset button and turn the key to LOCK position. Steering wheel will be locked automatically when the key is taken out. When starting key is on LOCK position, steering indicator, private lamp, alarming lamp and horn can be used.

ACC：Position to stop engine and at the time of shutdown.

In this position only radio set and cigarette igniter can be used.

ON：Position when engine rotating and electric system can work..

S：Position to start up engine. Release starting key when engine start up it will return from S position to ON position. If the starting switch is put to S position after engine starts up, the starter shall not be damaged owing to its maloperation protection function. Vehicles manufactured before June 2006 are provided with this function.

Note

- The key shall be fully inserted into starting switch and then turned.
- When the key is not easy to be turned, steering wheel shall be slightly moved left and right and then turn the key again.

Caution ⚠

● If turning the key from ACC to LOCK without pressing reset button the key can only be turned to the mark position between ACC and LOCK and in this case forced turning is not permissible. Press reset button in this position the key can be turned to LOCK position and taken out. Besides, press reset button once the key can be turned with hand released.

● For long time parking of vehicle the starting switch must be turned to LOCK position and key taken out or turned to the mark position between ACC and LOCK. If parking with the switch on ON or ACC position for long time the battery will be over discharged.

Air Heater Switch

Cummins type:

● This switch is used to operate electric preheating device (air in-take heater) to start engine easily in cold weather.

● Press this switch when starting key is on ON position, engine preheating device will work ≥60 seconds.

● Air heating indicator can be used to confirm working status of the engine preheater.

● When preheating button is pressed resistance wire of the preheating indicator will become red and bright and engine can then be started after 60 seconds. If environmental temperature is lower than -10 - 20℃ heating time should be properly extended and repeat several times till the engine starts up successfully.

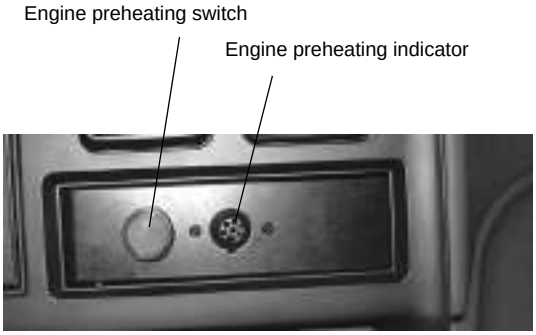

Weichai diesel engine type

● This switch shall be used to operate flame preheating device (air in-take heater) so that the engine shall be started up easily in cold weather.

● Press this switch when starting key is on ON position：

If low preheating temperature condition is satisfied (water temperature of engine is lower than 15℃) the control system shall enter into preheating status and red indicator of the switch shall flash 30±5 seconds. and then die out.

Entering 30 seconds waiting time for start-up:

If engine does not start up within 30 seconds. the preheating system shall automatically stop working after 6 seconds.

If the engine successfully start up the flame preheating system shall go on working till water temperature reaches above 15℃ and stop working. The light shall turn on after start-up (if you do not press the heating switch it will not automatically work.)

- Air heating indicator can be used to confirm working status of engine preheating device.

Caution ⚠

Power consumption of preheating device of engine is very great and repeat use should be avoided otherwise battery will be over discharged.

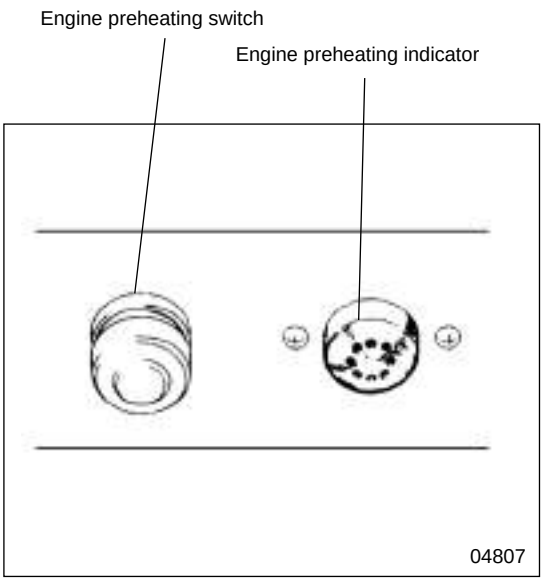

Air Heater Indicator

Cummins type:
This device shall indicate operating status of engine preheating device. Press air heater switch when starting switch is on ON position to operate electric preheater of engine and soon the air heater indicator will become red-hot. Only after confirmation of the air heater indicator being red-hot for 40-60 seconds, then engine can be started.

Note: working condition of fuel flame heating system and preheating system used for Weichai diesel engine can be identified by flashing of the red indicator of the air heater.

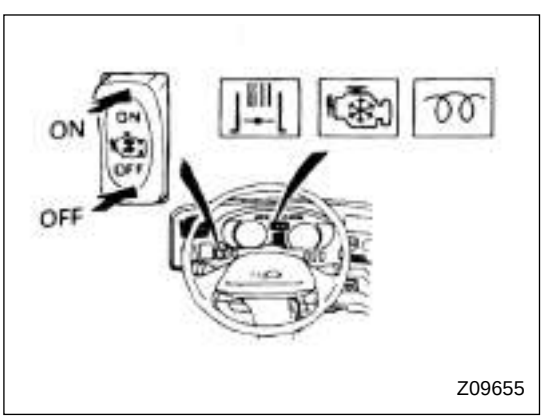

Cold Start-up Switch (Not Available for Some Types)

When starting engine in cold weather or shortening preheating time this switch can be turned to ON position.
Place the switch on ON position and the indicator will immediately flash.

Note
Cold starting switch should be turned to ON position for cold starting and after engine is started the switch should be turned to OFF position.

Warning ⚠

Do not drive when adjusting speed of engine. At this time accelerator pedal can not control the speed and it will be very dangerous to drive.

Starting up Engine

► Operation before starting

- Be sure that the parking brake can function normally.
- Push the gear lever to neutral gear

►Important for starting engine

- If it fails to start engine in one time the starting key should be turned to ACC position and start again after a period of time.
- Starter is not permitted to operate continuously for over 17 seconds. Otherwise it will result in starting failure or battery being over discharged.
- The vehicle is provided with automatic starting time controller, the interval of which is defined as 15 seconds.
- Starting key cannot be turned to S position when engine is in operation; Otherwise starter may be burned or damaged.
- If you want to start with accelerator pedal being stepped, the starting key should be turned to ON position first and then step on the accelerator pedal. If you step on the pedal before the key turned to ON position the fuel increasing device will not work, which will cause difficulty for engine starting. At this time the key should be turned back to ACC position and then start again.
- When starting with accelerator pedal being stepped on, the extent of step-on should be adjusted after engine start-up in order to avoid over speed idle running of engine.
- Vehicles parking for long time or after changing engine oil and filter element, the engine axle should be rotated first by starting motor and then start up engine.
- important for start-up of turbocharger engine

Upon start-up of turbocharger engine the charger bearing and rotating parts are still under insufficient lubricating condition so the engine cannot run idle at high speed. When driving on highway the engine should not be shutdown immediately.

Z10077

04366

04351

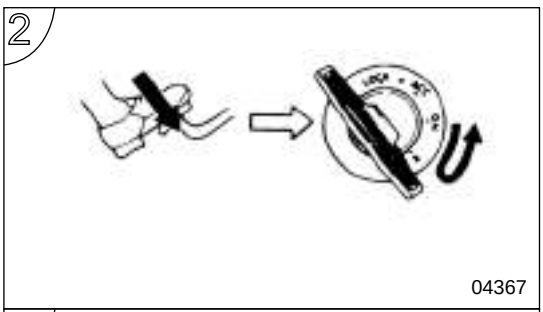

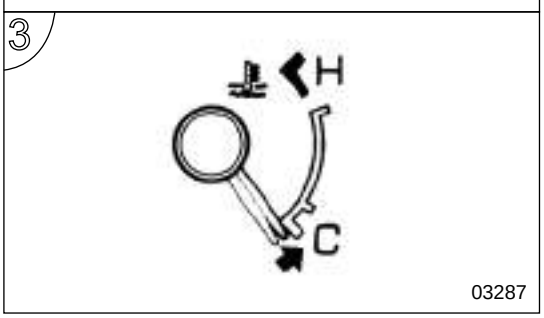

► Normal start-up

(at high temperature and engine warming up)
1. Turn starting key to ON position
2. Start engine with the starting switch, on S position while stepping on clutch pedal. If engine is difficult to start please step on the accelerator pedal.

3. After start-up of engine warming up should be performed until the water thermometer pointer begins to swing.

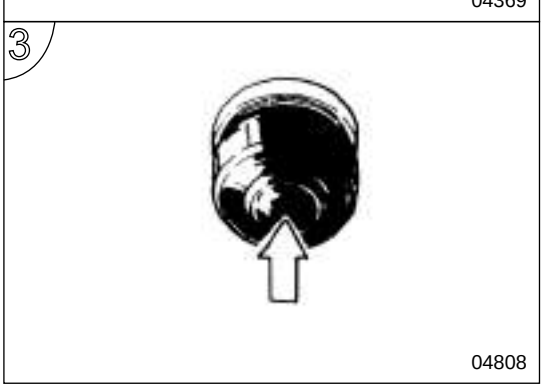

► Cold start up

1. Turn starting key to ON position and turn on cold start up switch (some types have no such switch)

2. If there is cold starting switch, turn it to ON position.

3. Keep the air heater switch at pressed position and during heating hand cannot get off the switch otherwise heating will stop immediately.

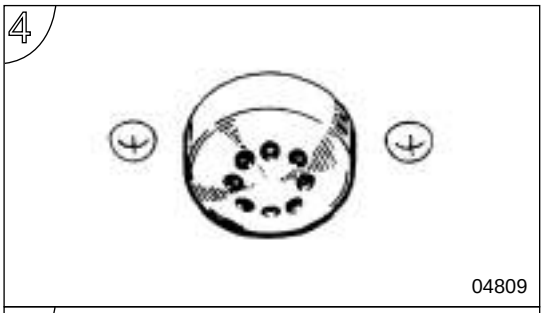

4. After pressing air heater switch for 40-60 seconds when air heater indicator is very hot release the switch (for Weichai diesel engine vehicle preheating condition will be confirmed according to preheating operation)

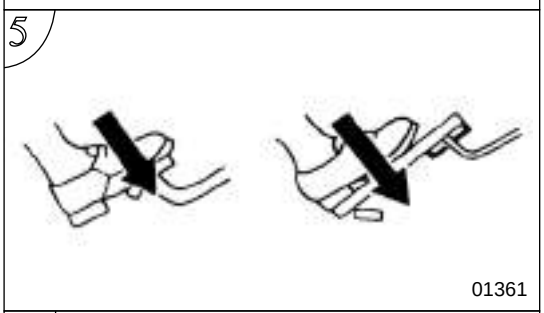

5. Step on clutch pedal and accelerator pedal simultaneously and step on the accelerator pedal several times.

6. Starting key shall be turned to S position to start engine. After start-up of engine release the key to let it return to ON position. Warming up operation should be performed until water thermometer pointer begins to swing.

Caution ⚠

- After warming up operation when vehicle start the cold starting key should be turned to OFF position.
- Preheating equipment of engine needs large quantity of current so repeat use of it should be avoided otherwise battery will be over discharged (serious under current may result in abnormal operation of vehicle).

Note

Air heater indicator is not red-hot in spite of the button of air heater being pressed for 60 seconds. or although the air heater indicator is red-hot the engine cannot start up yet, the cause may be that the fuse of preheating circuit is broken or the air heater is damaged. Please refer to related maintenance manual.

► Starting method of engine after long period of shutdown

After long period of shutdown or changing engine oil and oil filter elements there will be no enough oil in engine therefore the following method should be adopted to enable engine oil to flow into everywhere.

Warning ⚠

For the purpose of safety hand-operated brake should be applied and wooden pad used to lock the wheel.

1. Be sure that parking brake can take effect.

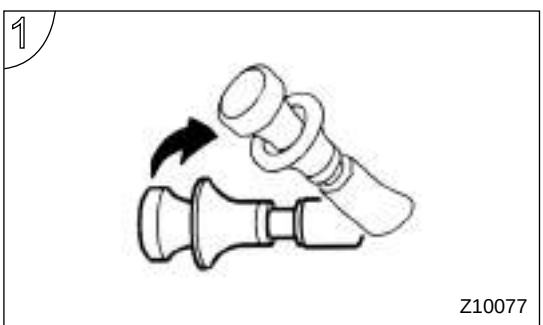

2. Push the gear lever into neutral gear.

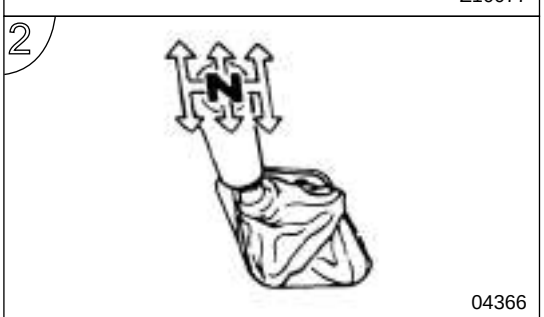

3. Turn the starting key to S position with the accelerator pedal not stepped on to start up engine within 15 seconds.

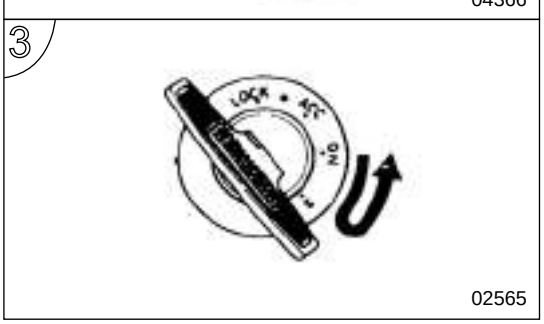

Caution ⚠

Before vehicle with turbocharger start up the engine must be rotated using the above method.

Note

Use starter motor to rotate crankshaft of engine, the purpose of which is not to start engine. Therefore the accelerator pedal should not be stepped on and after the starting key is turned to S position release hand.

► Starting engine with cabin dumped

When starting engine with cabin dumped for inspection or maintenance the following measures should be adopted first and then using starting key to start engine.

- Be sure that parking brake can take effect and use wooden pad to fix the wheel.
- Be sure that the gear lever is in neutral gear.
- Be sure that nobody is nearby the engine room.

Just as common doing use the starting key to start engine.

Caution ⚠

If forced stop handle is used the starting switch should be turned to LOCK position or turned to middle position between ACC and LOCK (marked)after shutdown. IF the key is left at ON or LOCK position battery will discharge.

Warming up Operation of Engine

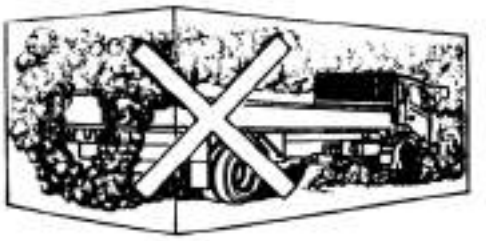

02012

Warning ⚠

- warming up operation should not be performed at place of insufficient ventilation such as garage otherwise the garage will be full of tail gas causing dangerous result.
- Inspect road surface where the vehicle is parking especially if there is flammable materials nearby the exhaust tube. As sometime heat emitted from engine or exhaust tube may cause fire.

Caution ⚠

No-load high speed idle running after start-up of engine will accelerate wear of cylinder and piston and is one of the reasons causing trouble with the engine so the specified method should be followed to perform warming up operation. This is especially important for vehicle with turbocharger.

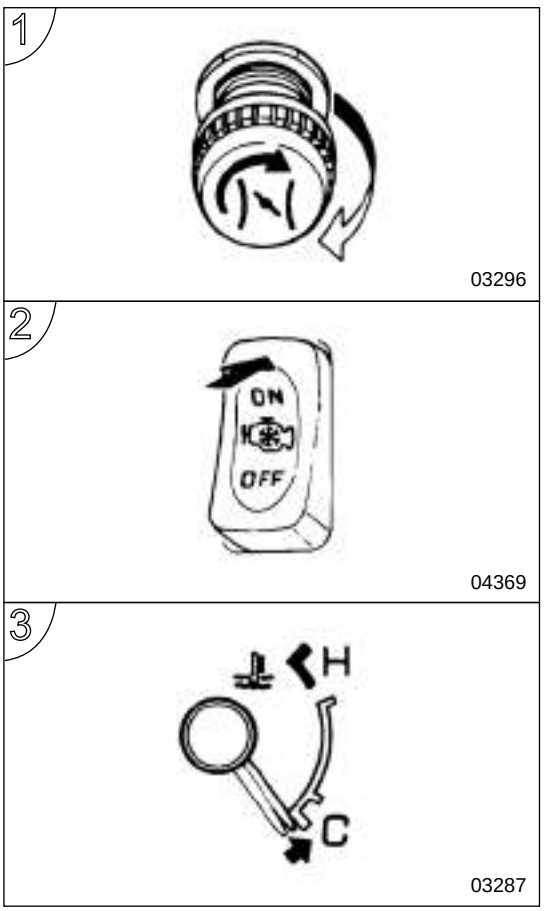

►Vehicle with mechanical speed regulator

1. Release the clutch pedal after start-up of engine. If starting engine with accelerator pedal stepped on the accelerator pedal should be released slowly and speed of engine reduced maximally.

2. If you want to end warming up operation soon you must turn the cold starting switch to ON position. (Some vehicles have no such switch)

Note

It is not permitted to over speed engine with the cold starting switch on ON position, otherwise the engine will smoke.

3. Continue warming up operation of engine until the water thermometer pointer begins to swing.

Engine idle speed
about 650 rpm

Caution ⚠

Driving can be performed only after the cold starting switch is turned off following temperature rise of the engine.

Note

If engine idle speed is too low noise will be great. It is necessary to adjust engine speed to best idle speed.

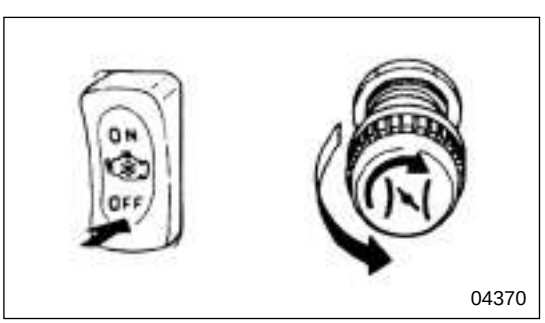

Note

It is not permitted to over speed engine with the cold starting switch on ON position, otherwise the engine will smoke.

1. Perform warming up operation until the water thermometer pointer begins to swing.

Caution ⚠

Cold starting control switch must be turned to OFF position when driving after warming up operation.

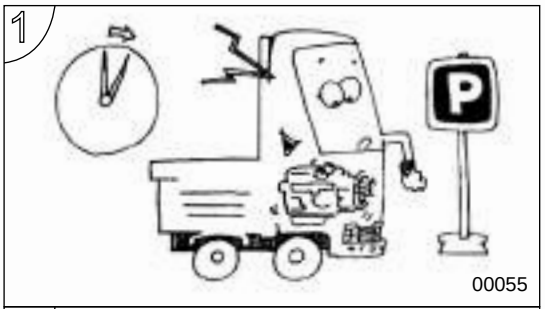

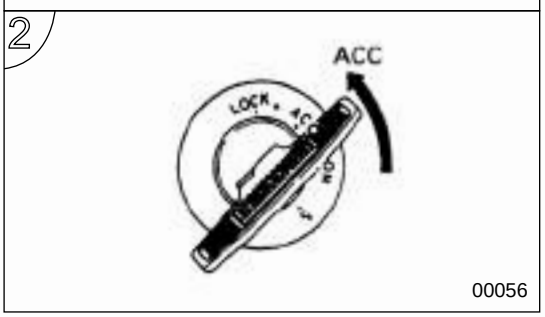

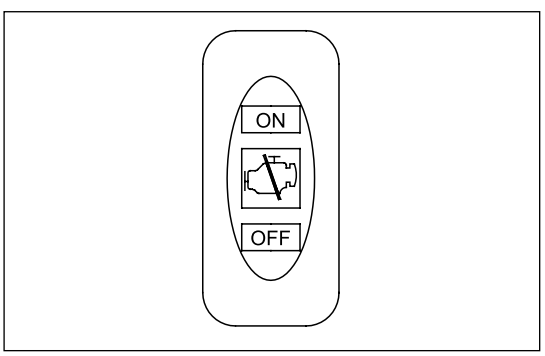

Stall of Engine

1. Perform idle running for over 3 minutes before stall of engine.
Every part of engine is in overheated status especially after climbing and running at high speed and it needs idle running to be cooled fully.

Caution ⚠

Idle running for 3 minutes before stall of engine is very important for vehicle with turbocharger.

2. Turn the starting switch to ACC position to shut down the engine.
For Weichai diesel engine the shutdown switch should be pressed until the engine completely stop and then release the switch.

Warning ⚠

- It is absolutely not permitted to let vehicle running by inertia with engine shutdown. For this status may not only cause trouble with brake but also steering wheel of the vehicle with assistant steering box will become obviously heavy that is very dangerous.
- Exhaust tube will be in high temperature condition after driving so do not park the vehicle nearby flammable material such as withered grass.

Caution ⚠

- Engine must be shutdown under condition of idle running. If it is shutdown when operating at high speed harmful effect will be caused to the engine.
- In case that engine of vehicle with mechanical speed regulator rotates in reverse direction the starting key must be turned immediately to ACC position.
- After engine is shutdown the starting key should be turned to LOCK position or to the middle position between ACC and LOCK(marked·). If the key is left at ON or ACC position the battery will be discharged.

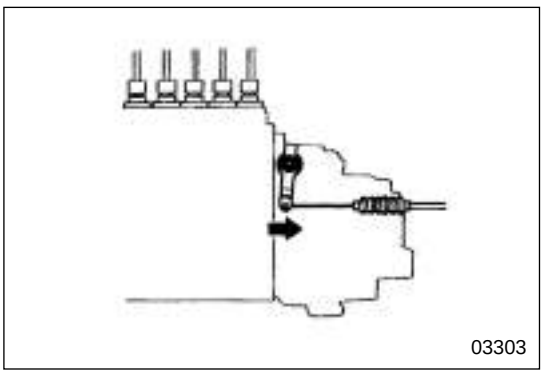

Note

If engine is not shutdown when the starting key is turned to ACC position the main power switch may be turned off manually for vehicle with hand operated main power switch. The stall of non-electrical controlled engine should be carried by pulling the stall handle which is nearby the stall puller of engine.

● Vehicle with mechanical speed regulator

Be sure that hand operated brake is applied and wooden pad used to fix the wheel. Dump the cabin and pull shutdown lever of oil spray pump toward the direction as shown by the arrow to shutdown the engine. After complete shutdown of engine release the lever.

Warning ⚠

Don't touch rotating engine.

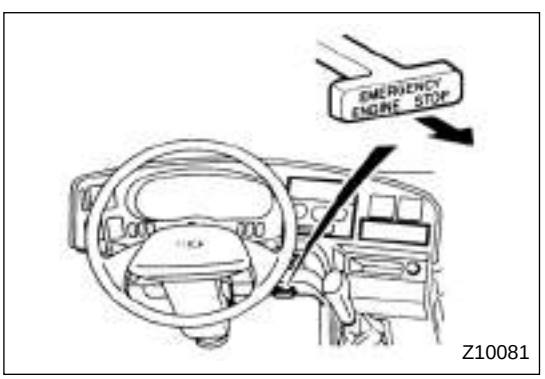

If the starting key is turned to ACC position but the engine is still operating the cause may be that there is trouble with the stop wire of engine or with the starting switch. Go to Hualing Automobile Service Center for inspection.

Pull out the emergency stop button to shutdown the engine and after the vehicle stop completely release the hand.

Caution ⚠

● Engine emergency stop button should not be used except emergency situation. In case of having used emergency stop button the starting switch should be turned to ACC or LOCK position for over 5 seconds. in order to reset the micro-controller. If engine is restarted with micro-controller being not reset, the alarming lamp will light and the engine speed will become unstable.

● If engine emergency stop button is used, inspection must be made by Hualing Automobile Service Center.

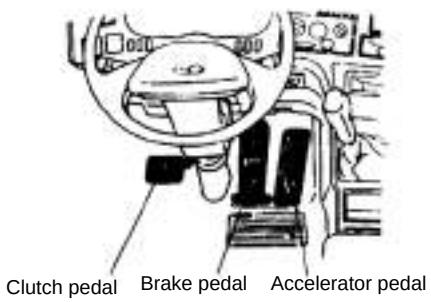

04372


04373


01979

Pedal

► Accelerator pedal

Do not operate at high speed immediately after engine starts. This operation will not only waste fuel but also cause trouble with the engine.

► Brake pedal

Use correct method to operate brake pedal.

Warning ⚠

- It is very dangerous if empty can is interspersed under brake pedal because the brake pedal cannot be operated in that case. Empty cans should be collected at all times.
- Free space should be maintained under brake pedal and no dust or foreign matter be intruded. Otherwise brake pedal will not be able to return to its position fully resulting in braking lag. Press brake pedal to check if it can move up and down smoothly.

► Clutch pedal

- Do not put your foot on clutch pedal when driving. Operating in this way clutch will slip resulting in incomplete transmission of dynamics of engine and shortening of lifetime of clutch friction disk. After completing gear shift foot must leave brake pedal.
- It is not permitted to keep clutch at slipping for long time for that will shorten lifetime of clutch.

FULLER9 Gear Box

1.Double intermediate shaft construction

- Fuller double intermediate shaft gear box employs two pieces of intermediate shaft of completely same construction for primary and secondary gear box with interval of 180°to each other. Dynamics will divert to two intermediate shafts after importing from input shaft and then gather and export from driving shaft. The secondary gear box is the same as this.

Sketch of floating construction of driving shaft

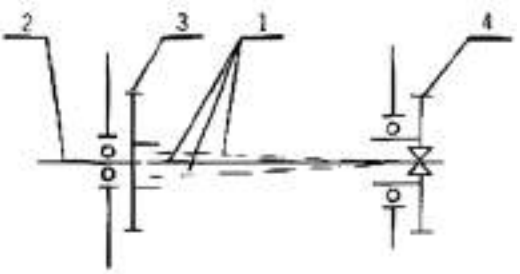

1. Driving shaft
2. Input shaft
3. Input shaft gear
4. Driving gear of secondary gear box

● Theoretically each intermediate shaft only transmits 1/2 of torque therefore double intermediately shafts can reduce center-to-center distance of gear box, decrease width of gear, shorten axial dimension and lighten quality. All the gears on the driving shaft must engage with the two intermediate shaft gears simultaneously after using the double intermediate shaft.

● In order to engage correctly and distribute load as equal as possible driving shaft shall employ hinged floating construction for radial floating of gear on the driving shaft. Driving shaft journal shall be inserted in bore of input shaft and guide sleeve containing oil pressed with enough radial space between the journal and guide sleeve. Rear end of the driving shaft shall insert driving gear bore of secondary gear box via spline and driving gear journal of the secondary gear box shall support on ball bearing.

● In fine teeth gear box the driving gear journal of secondary gear box has two slots which are provided with rubber O-ring to form elastic support together with the bearing.

● As all the gears float on driving shaft the traditional needle bearing is thus removed and construction of driving shaft assembly becomes more simple. When working radial force applied by the two intermediate shaft gear on the driving shaft gear is equal in size but reverse in direction thus the driving shaft only bears torque but not bending moment and force-bearing status of the driving shaft and bearing is improved thus greatly increasing reliability and duration of gear box..

2. “Teeth alignment” and procedure of teeth alignment

● For correct engaging of the double intermediate shaft gear with the driving shaft gear teeth alignment must be performed.

● So-called “teeth alignment” means that the marked teeth of the double intermediate shaft gear shall be inserted respectively in the groove of two group of marked teeth (each group containing two adjacent teeth) of input shaft (one shaft) gear.

● “Teeth alignment ” of secondary gear box shall also be performed as above method. Normally the rear pair of gear shall be selected for “teeth align-

Sketch of teeth alignment of gear box assembly

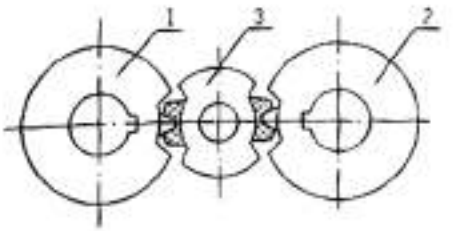

1. Left intermediate shaft driving gear
2. Right intermediate shaft driving gear
3. Input shaft gear

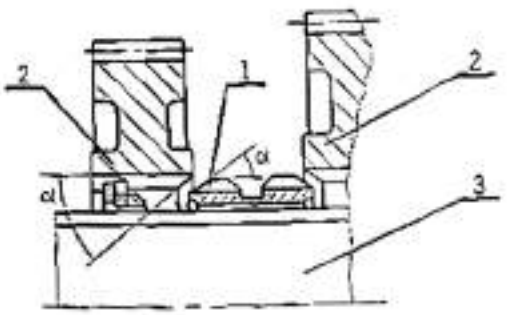

1. Slipping bush
2. Driving shaft gear
3. Driving shaft
4. Operating mechanism

ment".

● "teeth alignment" procedure

（1）First mark any two adjacent teeth of one shaft gear and then mark two adjacent teeth on the opposite side. Number of teeth between the two marks should be equal.

（2）Mark the tooth of each intermediate shaft gear, which is facing the gear key groove for identification.

（3）When assembling the two marked teeth of intermediate shaft driving gear should be engaged respectively with right and left marked teeth.

3. Gear shift mechanism

● There is no synchronizer in main housing of Fuller double intermediate shaft gear box and slipping bush of the driving shaft is put on the shaft through spline. Move slipping bush to engage joint teeth of the bush with joint teeth of the driving shaft to transmit dynamics. There is cone angle (α=35º) of the same size in the slipping bush and joint teeth of the driving shaft gear. As the driving shaft and gear are both in floating condition, these two cones can play a role of automatic centralization and synchronization when putting into gear.

● Fuller double intermediate shaft gear box has many gears and speed ratio has little difference and speed difference between adjacent gears is small when working so that gear shift is very smooth.

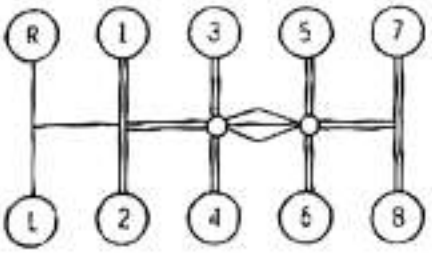

Position of operating handle of double H gear changing mechanism

● Hualing vehicle equipped with Fuller double intermediate shaft gear box employs remote double H operating mechanism, position of whose operating handle is as shown in the figure.

●In H double operating mechanism 1-2-3-4 and R-L are in low gears and 5-6-7-8 in high gears.

● Pneumatic line of double H gear changing mechanism is as shown in figure. There are two neutral gear position: one is 3-4 gear in low part and the other is 5-6 gear in high gear position.

Sketch of pneumatic line of double H gear changing mechanism

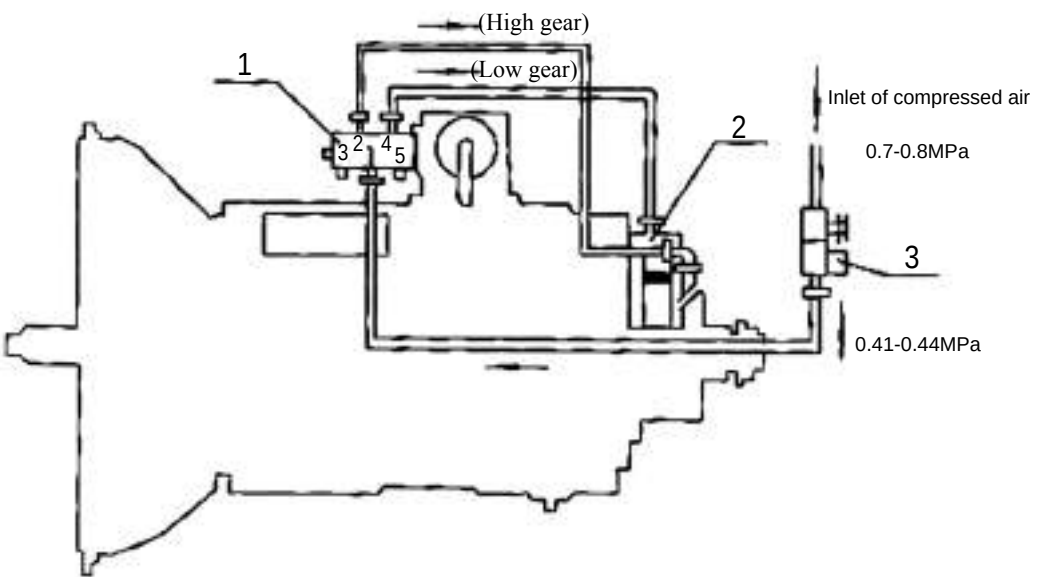

1. Double H air valve 2. Range gear cylinder 3. Air filter regulator

● Poker installed on transverse gear lever of double H operating mechanism will directly control double H air valve to connect with air loop in high gear or low gear to realize automatic change of high gear and low gear. Port 1 of double H air valve is air inlet and ports 2 & 4 are outlets and ports 3 & 5 exhausts.

Sketch of double H operating device

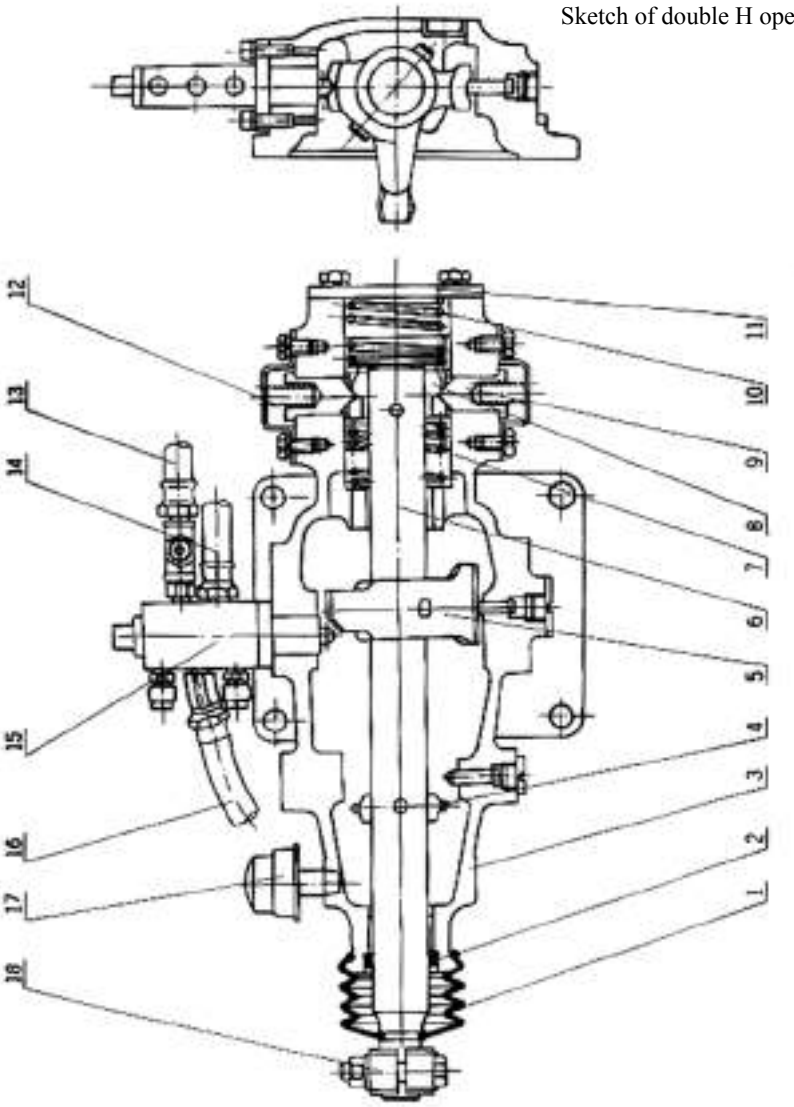

1.Dust cover
2.Oil seal
3.Case of double H operating device
4.Control block of reverse gear switch
5.Gear changing poker
6.Transverse gear lever
7.Balance spring
8.Positioning ring
9.Positioning wooden plug
10.Balance spring
11.Side plate
12.Compressed spring
13.14.16 Air pipes
15.Double H air valve
17.Ventilation plug
18.External gear shift arm

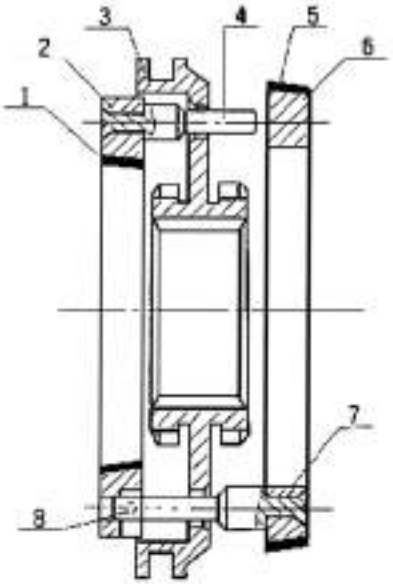

1. Friction tape of high gear
2. Synchronizing ring of high gear
3. Slipping teeth bush
4. Locking pin of high gear
5. Friction tape of low gear
6. Cone ring of low gear
7. Locking pin of low gear
8. Spring

Synchronizer assembly

6. Gear shift of synchronizer

● Secondary gear box of Fuller double intermediate shaft gear box is provided with pin-type inertial synchronizer. It will be controlled by gear shift cylinder of secondary gear box working only at changing from high gear to low gear or vice versa. It is controlled in link with transverse gear lever and double H air valve.

● Construction of synchronizer. High gear synchronizer ring 2 and low gear cone ring 6 each is provided with 3 pieces of locking pin 4 and 7 and slipping teeth bush 3 is connected with output shaft of secondary gear box through spline. Body of high gear synchronizer ring and low gear cone ring is made of iron base powder by sintering process. Inner cone face of high gear synchronizer ring and outer cone face of low gear cone ring are applied with non-metallic material of high friction performance and there is respectively outer cone face and inner cone face on driving gear and reduction gear of secondary gear box.

Construction diagram of neutral gear cylinder

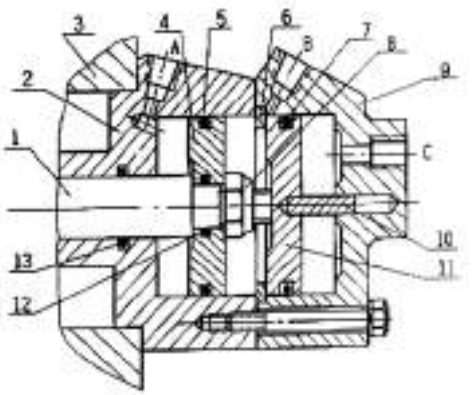

1. Poking shaft of range gear
2. Range gear cylinder
3.Rear cover housing
4. Range gear cylinder piston
5. O-ring
6. Positioning ring
7. O-ring
8. Hex nylon locking nut
9. Neutral gear position cylinder
10. Guide pin
11. Neutral gear position cylinder
12. O-ring
13. O-ring

7. Power take-off mechanism

● To meet the needs of some special vehicle power take-off can be installed on right side of primary box and power take-off window for Fuller double intermediate shaft gear box. They will take-off power respectively from take-off gear locating between intermediate shaft driving gear and the 3rd gear called as “side power take-off” and “bottom power take-off”. Power can also be taken-off from extended intermediate shaft of secondary gear box called as “rear power take-off”. This method of “rear power take-off” is now used most popularly.

● When using “rear power take-off” method the secondary gear box must be put into neutral gear position to realize stop power takeoff. To solve this problem it is only necessary to remove cylinder cover of range gear and install a neutral gear cylinder.

Figure 14 is construction diagram of neutral gear cylinder. Position shown in figure is neutral gear position.

● In the figure ports A and B are respectively connected to low gear and high gear air pipe and to double H air valve of gear box with air pressure of 0.41-0.44MPa. Port C is inlet of compressed air when the gear box is in position of neutral gear with air pressure of 0.7-0.8MPa. When parking for power take-off the gear lever should be pushed to low gear position first to let range gear cylinder piston 4 be pressed onto positioning ring 6 and then operate neutral gear position cylinder control valve so that compressed air of 0.7-0.8MPa will pass from port C to neutral gear position cylinder 9. As there is pressure difference the neutral gear position cylinder 11 shall move left and stop when pressing against positioning ring 6. At this time range gear cylinder piston 4 will be in neutral gear position.

VII、Use, maintenance and important matters of Fuller double intermediate shaft gear box

For safe and reliable driving of vehicle and prolonged lifetime of gear box it is very important to correctly and reasonably operate, periodically maintain gear box. For this purpose the following requirements must be observed.

1. Lubricating oil brand

Gear box must be filled with 85W-90 gear oil.

2. Correct oil level

Be sure that oil level must be flush with fuel injection port. Oil level should be checked through cone injection pond at side of oil tank. Oil injection shall stop as soon as the fuel injection port overflows.

3. Working temperature

Max. continuous working temperature of gear box should not exceed 120℃ and minimum temperature not lower than -40℃. Over 120℃ working temperature will cause lube oil be dissolved and lifetime of gear box shortened.

4. Oil changing cycle

For new gear box lube oil must be changed after driving 2000-5000 km.

Lube oil level and leakage should be checked for every 10000 km driving and supplemented with lube oil at any time.

Lube oil must be changed after driving 50000 km every time.

5. Dragging or slipping

When gear box working shaft and gear rotate continuously to provide sufficient lubrication for gear box. But when vehicle is dragged with rear wheel touching ground and transmission train connected the intermediate shaft gear and main shaft gear do not rotate and the main shaft is rotating at high speed by the rear wheel and this will cause serious damage to gear box.

- The same damage will be done to gear box when it is slipping in neutral gear position.
- When vehicle needs to be dragged half shaft may be drawn out or driving shaft disengaged and also be dragged with driving wheel leaving ground.

Important ⚠

1. Clutch must completely separate and gear lever must be put into gear position when changing gear
2. Gear lever has two neutral gear positions for high gear and low gear i.e. 5-6 position in high gear and 3-4 position in low gear. When parking vehicle gear lever should be put to neutral gear position in low gear.
3. When vehicle is put to low gear (creeping gear) or reverse gear it should be stopped first and then put into gear so as not to damage parts of gear box. For reverse gear great force should be applied to overcome resistance of reverse gear lock.
4. When changing from gear 4 to gear 5 (or from gear

5 to gear 4) stop consciously for a moment to facilitate changing of high and low gear positions by the secondary gear box.

5. When gear box is changing from low gear position to high gear position (or vice versa) do not jump over, otherwise it will affect lifetime of synchronizer of secondary box.

6. In case of no thoroughfare intermediate shaft brake should be used.

7. When vehicle is driving downhill no changing of high and low gear position should be performed.

8. Vehicle should start using first or second gear according to road condition.

9. Before vehicle starts stopping brake should be firstly released. For vehicle using pneumatic brake it can start only after pneumatic pressure has increased to the value necessary to release the brake following connection of brake valve.

10. If gear box has abnormal noise and operation is obviously heavy the vehicle should stop immediately to be inspected until trouble is removed.

04374

Mitsubishi Ten-speed Gear Lever

- Each position is marked on top of gear lever.
- Completely step on clutch pedal before changing gear.
- When gear lever is put into reverse gear position (R) reversing lamp will be lit and at the same time buzzer will ring (if vehicle has a buzzer).

Caution ⚠

- changing from forward gear to reverse gear or from reverse gear to forward gear should be performed after the vehicle completely stop. In addition it should be fully confirmed that the rear is safety when reversing the vehicle.
- In neutral gear do not put hand on gear change lever for this may result in thrust forward or backward causing trouble with gear box.

Mitsubishi Ten-speed Gear Box

Operating method of ten-speed gear box is the same as that of the five-speed gear box. But ten-speed gear box has secondary gear lever for selecting high gear and low gear so that 5 gear becomes

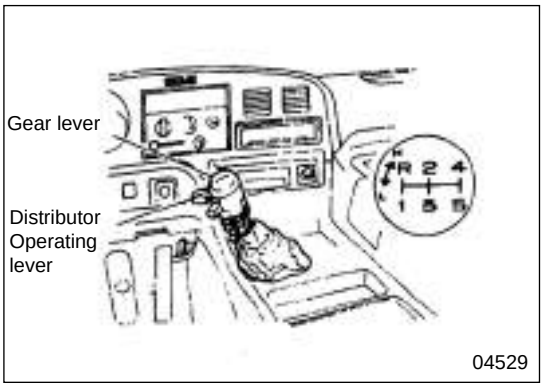

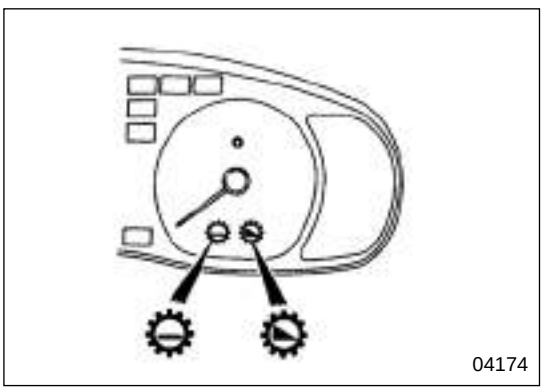

10 gear.

►Gear shift operation

Operating method of gear lever is the same as that of 5 or 6 gear box.

►Changing of high gear(H)and low gear (L)

Example: 4L↔4H

1. Push operating lever of secondary gear box to H or L position.
2. Step on clutch pedal without stepping on accelerator pedal, the selected gear of secondary gear box will engage.
3. Confirm that gear shift is complete according to or indicator. Then foot will leave clutch pedal.

When the operating lever of secondary gear box shifts to H position, indicator will light ;when it shifts to L position,indictor will light.

►Simultaneous changing of gear position of gear box and gear position of secondary gear box

Example： 4LH↔5L

1. Push operating lever of secondary gear box to H or L position.
2. Step on clutch pedal without stepping on accelerator pedal, the selected gear of secondary gear box will engage.
3. Confirm that gear shift is complete according to or indicator.
4. When gear box is pushed to desired position release clutch pedal.

Caution ⚠

●It is a must to operate secondary gear box operating lever to select speed range before stepping on clutch pedal.

●When changing operating lever from H position to L position the engine speed must be under 1800 rpm.

●Even if mal-operation of operating lever during driving the speed range will not change except that clutch pedal is stepped on. At this time the operating lever must be returned to normal position.

Note

When using operating lever of secondary gear box

to change speed sometime gear cannot be engaged or engaged with neutral gear if clutch pedal is stepped on too soon.
After confirmation of completion of gear shift by indicator foot should be moved from clutch pedal.

Parking Brake Valve

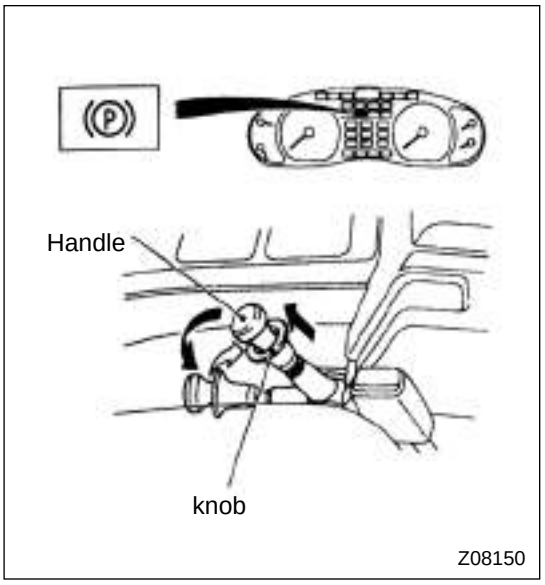

Warning ⚠

With exception of emergency case parking brake should not be used during driving.

►Parking

Pull out handle ①, parking brake will operate immediately and indicator ② will light.

►Release brake

Confirm that (!) indicator is died out. After knob ③ is pulled out the handle should be pressed and after reset parking (P) status will be released. (P) Indicator will go out.

Warning ⚠

- Pull the handle up to position where handle can be fixed. If the handle returns to released position during braking parking brake function will be ineffective.
- After parking function is released air pressure may fall down sometime. Before starting, please be sure that air pressure meets the requirement.
- Incomplete release of parking status will cause braking drag if vehicle is driving under this condition the brake will become hot causing fire.

Sometime parking status may not be released due to trouble with braking pipe etc.

Caution ⚠

- When starting please confirm that (P) indicator has already died out. Driving without release of braking will cause damage to parts of brake or deterioration of performance. If (P) indicator is abnormal please confirm that if it is within scope of normal air pressure（4.5kg）.

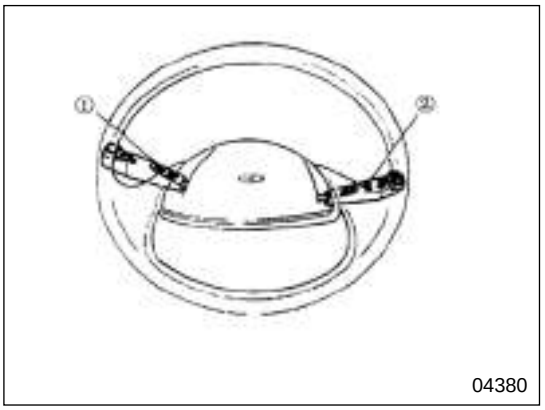

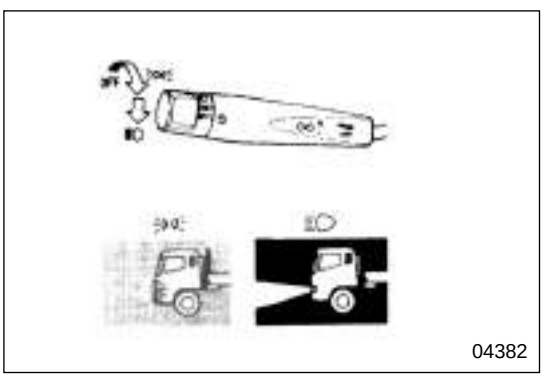

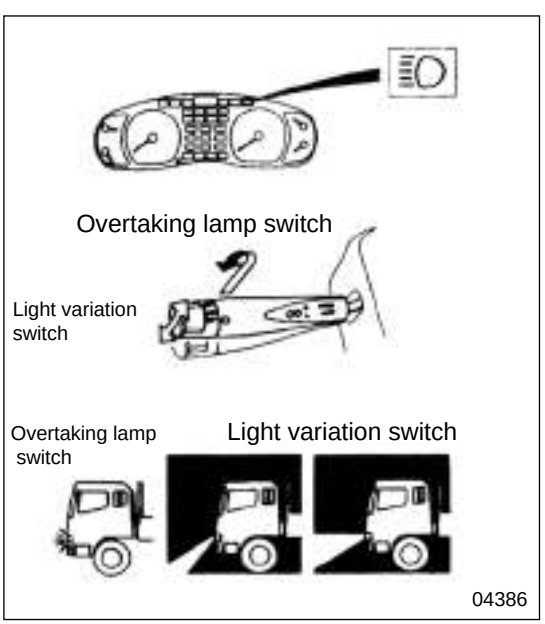

● If parking brake cannot function adequately on slope and slippery road the differential speed lock switch should be turned to ON position so as to provide more effective braking power.

Combined Switch Lever

►Arrangement of switch

① ● steering signal indicator switch
- head light/ light variation switch
- overtaking light switch (steering light)
- lamp control switch

② ● exhaust stop switch
- wind shield wiper switch
- window cleaner switch
- warning switch

►Illuminating light switch

The following lights can be controlled by turning the switch on top of handle.

	license light, profile boundary mark light, side vehicle model mark light, tail light, position light (optional), width showing light, instrument light	headlight
Position	light	die out
front light	light	light

Caution ⚠

●If light is shining, continuously while and engine is not working the battery will be over discharged.

►Overtaking light/light variation switch

● overtaking signal switch (steering light)

Pull up handle, to turn on far light lamp to inform other vehicle.

● light variation switch

When headlight is shining,press down the handle and the headlight will become far light. Pull up the handle, the headlight will become near light. When the headlight becomes far light, the indicator on

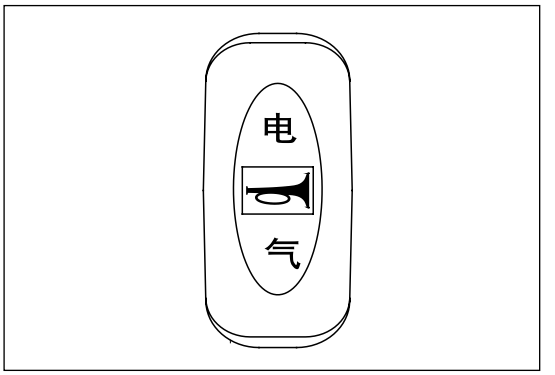

dashboard will be lit.

►Electric horn switch

● If pneumatic horn is used, press “pneumatic” button of switch to confirm existence of air pressure and then press the horn switch on steering wheel the horn will sound; otherwise, the buzzer will ring. For electric horn the operating method is just the same as above-mentioned.

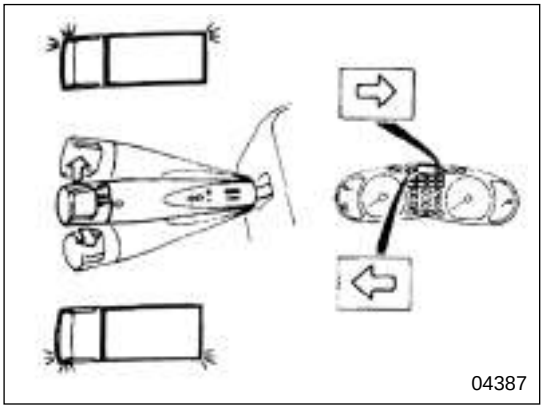

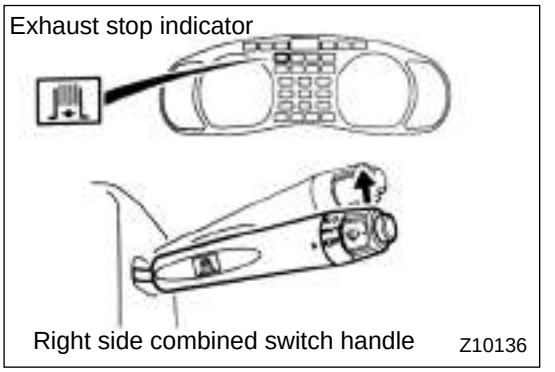

►Steering signal indicator switch

● Steering signal

When pushing forward or pulling backward the handle the corresponding steering light will begin to flash and at the same time ⇦ or ⇨ indicator on instrument panel will also begin to light. After turning left or right and returning steering wheel the switch handle will reset automatically. If the switch handle cannot reset automatically due to detour being relax the handle should be pushed back by hand.

►Exhaust brake switch

Exhaust brake is used to improve braking effect of engine and shall be used as auxiliary brake for vehicle going downhill or driving at high speed.

●When pushing forward the switch handle with accelerator pedal and clutch pedal released exhaust brake will begin to work. When exhaust brake is working the indicator of instrument panel will light.

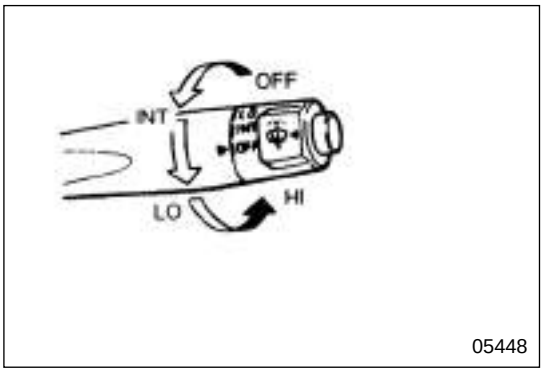

●When accelerator pedal or clutch pedal is stepped on or when gear lever is put into neutral gear, the exhaust brake will be no longer effective. Exhaust brake will resume effect as soon as previous status recovers.

►Windshield wiper switch

Warning ⚠

When front cover is opened for maintenance it is not allowed to operate windshield wiper or window cleaner because link device of windshield wiper will cause danger

● When turning knob of the handle the windshield wiper will work in one of the following method.

INT: The wiper will wipe at interval of 4-6 seconds;
LO: The wiper will wipe slowly;
HI: The wiper will wipe quickly.

● When function of the wiper deteriorates, new wiper blade should be installed.

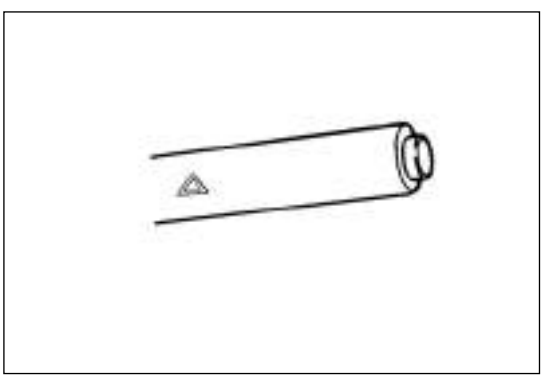

►Warning switch will control this handle and front-rear and left-right steering lamp will flash simultaneously.

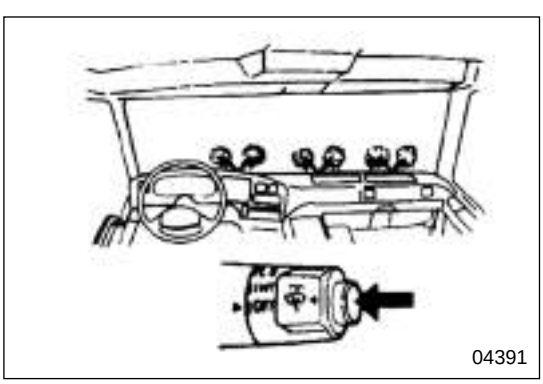

Caution ⚠

● Dry-wiping window will scratch the glass. When the window glass is dry, cleansing solution should be applied first and then operate the wiper.

● Do not operate the wiper and cleansing solution with the wiper arm lifting for in that case the wiper arm may be damaged.

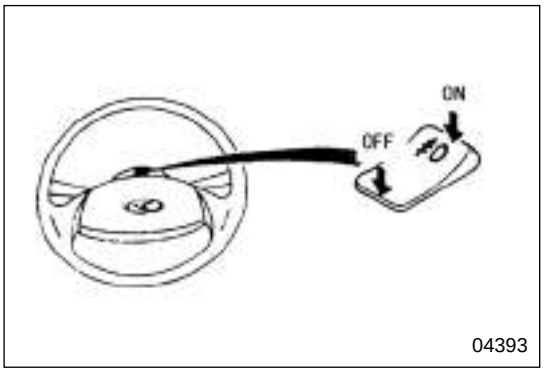

- After pressing the spray button for 3 seconds the wiper will wipe several times automatically.
- If cleanser spray continuously for over 20 seconds or keep on rotating motor without cleansing solution, the motor of the cleanser will be burned.
- Cleansing solution should be compensated as soon as it is used up.

Front Fog Light Switch

Front fog light may be used when visibility is not so far due to thick fog, snow and heavy rain. With illuminating light switch is on " ", " " position the front fog light will be lit when the switch is turned to ON position. Fog light will not be lit if night lamp is not turned on.

Turn the front fog light switch or illuminating light switch to OFF position the light will go out. When using illuminating light switch to turn off front fog light the switch of which should be turned to OFF position firstly.

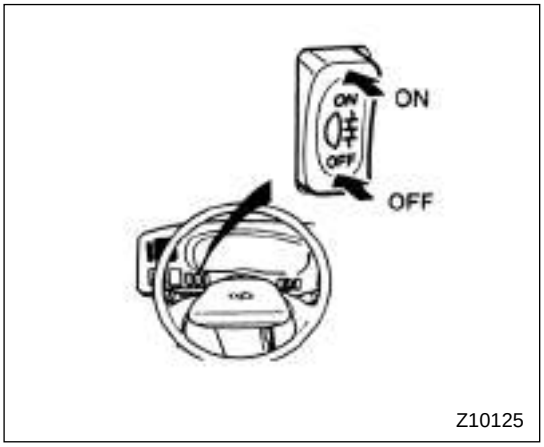

Caution ⚠

Do not use fog light except for poor visibility due to thick fog;otherwise, it will disturb other drivers.

Rear Fog Light Switch

Rear fog light may be used when visibility is not so far due to thick fog, snow and heavy rain in order to prevent the following vehicle from crashing.

When illuminating light switch is on" "position or the front fog light is lit,the rear fog light will be lit by turning its switch to ON position. When the hand release the switch will reset.

Turn the rear fog light switch or illuminating light switch to OFF position the light will go out.

When illuminating light switch is on position the front fog light and rear fog light will be lit simultaneously and when the illuminating light switch is turned to OFF

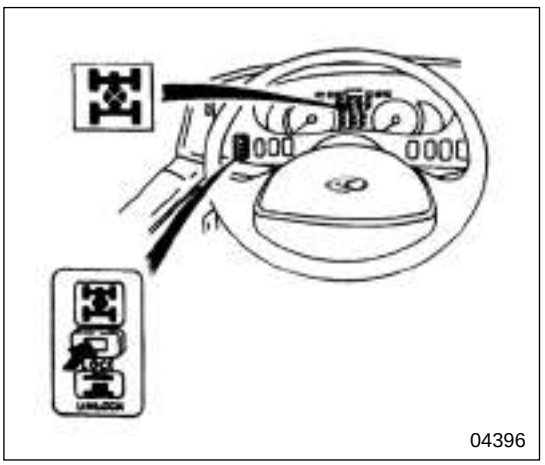

" " position the front and rear fog lights will go out simultaneously.

Caution ⚠

Do not use the rear fog light except for poor visibility due to thick fog; otherwise, it will disturb other drivers.

Inter-shaft Differential Lock Button

Differential lock button is used to remove speed difference between two rear shafts. When driving on soil, snowy, frozen or slippery road this switch may be used to drive the vehicle out of the slippery road in case of the driving wheel losing its driving power.

- Before driving on slippery road stop the vehicle and turn the differential lock switch to ON position. Then drive the vehicle at low speed. If the wheel slips when the switch has not been turned to ON position stop the vehicle and then press the button.
- Turn the switch to OFF position and unlock the differential as soon as the vehicle drives out of slippery road
- When the differential is in locking condition, the indicator on instrument panel will light and whereas it will go out.

Caution ⚠

- If driving wheel is slipping in driving,the vehicle will lose driving power and at this time stop the vehicle immediately and turn the differential lock switch to ON position. It is not permitted to let wheel idling for long time for in that case the differential will be burned.
- In normal driving condition the differential lock switch should be kept at OFF position. If it remains on ON position, tyres will be worn seriously or gears damaged.

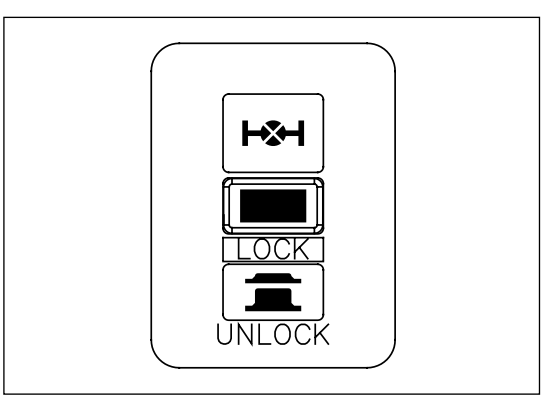

Inter-wheel Differential Lock Button

Differential lock button is used to remove speed difference between two wheels. When

driving on soil, snowy, frozen or slippery road this switch may be used to drive the vehicle out of the slippery road in case of the driving wheel losing its driving power.

● Before driving on slippery road stop the vehicle and turn the differential lock switch to ON position. Then drive the vehicle at low speed. If the wheel slips when the switch has not been turned to ON position, stop the vehicle and then press the button.

● Turn the switch to OFF position and unlock the differential as soon as the vehicle drives out of slippery road

● When the differential is in locking condition ,the indicator on instrument panel will light and whereas it will go out.

Caution ⚠

● If driving wheel is slipping in driving, the vehicle will lose driving power and at this time stop the vehicle immediately and turn the differential lock switch to ON position. It is not permitted to let wheel idling for long time for in that case the differential will be burned.

● In normal driving condition the differential lock switch should be kept at OFF position. If it remains on ON position tyres will be worn seriously or gears damaged.

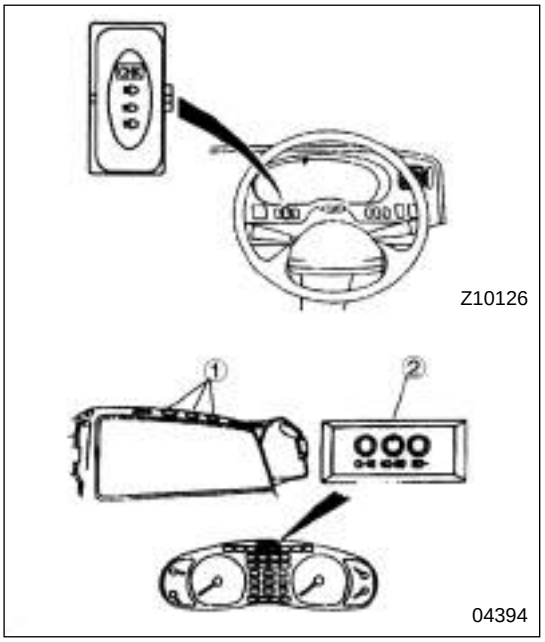

Speed Indicator Switch

When turning the switch to ON position the speed indicator ① of cabin and indicator ② will light. After inspection turn the switch to OFF position. Lighting speed of indicator is numbered from left to right as 1、2、3、

speed	light
20-40km	1
40-60km	1.2
60km	1.2.3

All the lights may sometime be lit simultaneously. Speed control is provided.

Z10127

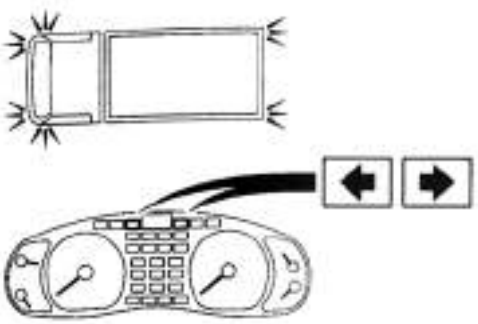

Z10128

Alarming Light Switch

For emergency stop on road the main alarming light will flash in order to let other vehicle keep space. Flashing of the alarming light is independent from position of the starting switch.

Lift right handle and alarming light switch will turn on and the steering indicator will flash. Press down the switch and the alarming indicator will go out.

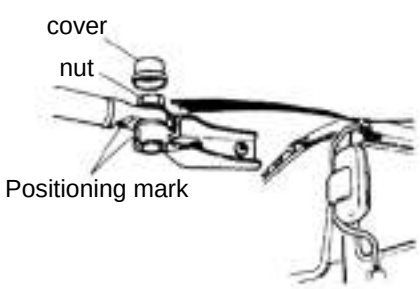

04398

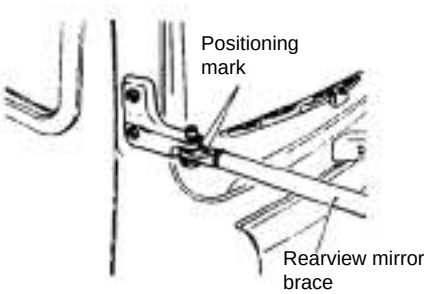

04397

Rearview Mirror

When a vehicle turns right or meets with other vehicle on narrow road the rearview mirror can be moved inward. Reset the mirror as follows.

► Type I

- Rearview mirror at side of driver

When resetting the mirror please align it with the mark on the top. If it is difficult to move the rearview mirror brace, please remove the top cover of the mirror, unscrew the nut slightly, then move the brace and tight the nut and replace the cover.

- Rearview mirror at side of co-driver

When resetting the mirror please align it with the mark on the bottom.

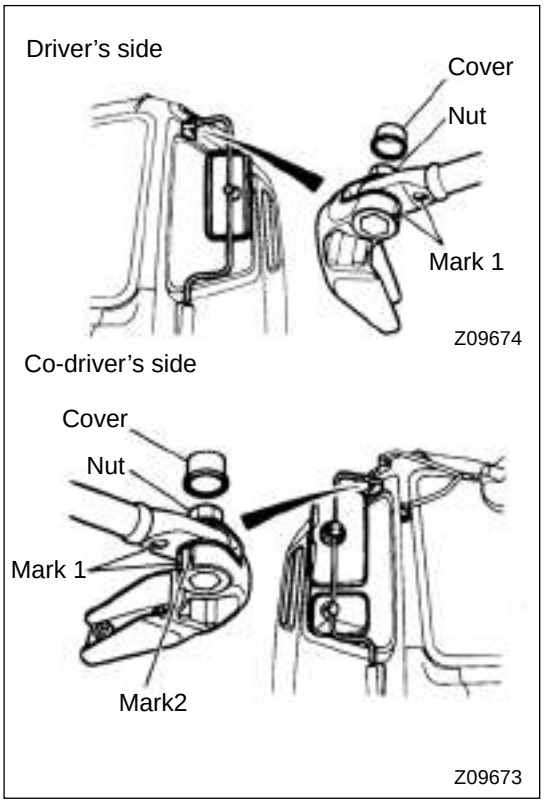

► Type II

When resetting the rearview mirror,please be sure that it is aligned with the top mark. When aligning the rearview mirror at the co-driver's side,please be sure that it must be aligned with mark 1 instead of 2.

If it is difficult to move the rearview mirror brace please remove the top cover of the mirror first and unscrew the nut slightly, then move the brace and tight the nut and replace the cover.

Arrangement of Instruments and Warning Lamps

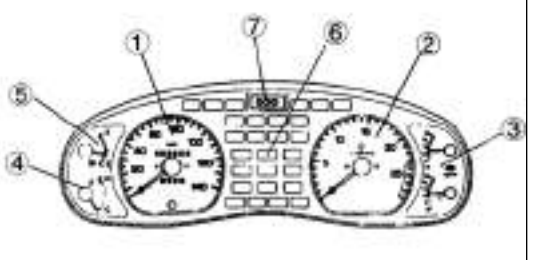

Z06663

Arrangement of Instruments and Warning Lamps

① Speedometer
② Tachometer of engine
③ Air pressure gauge
④ water temperature gauge
⑤ Fuel gauge
⑥ Warning lamp/Indicating lamp
⑦ Speed indicating lamp

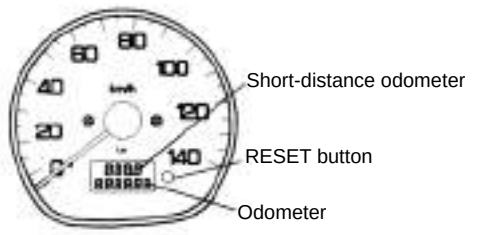

04384

Speedometer

● Speedometer indicating the speed of motor vehicle in km/h

● Odometer in km indicating the accumulative run distance.

● Short-distance odometer indicating the run distance of a certain section in km. Press the Reset button to reset the short-distance odometer.

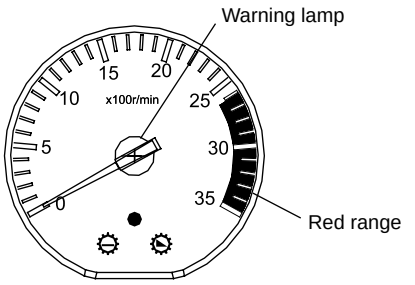

04385

Tachometer

● The tachometer indicates rpm of the engine.

● The red range indicates the rotating speed of the engine. When running on a slope or shifting the gear, the rotating speed of the engine shall be prevented from entering in this range.

Caution ⚠

Continuous running at an over-speed will probably result in damages to the engine.

Note

"Over-speed" means running at a speed over the max. rotation rate. This state may occur due to the driving force of the wheels when running on a slope and a geared-down speed can be shifted to.

► Tachometer (O) with an over-speed warning lamp

In case the rotating speed of the engine is over 2800rpm,the warning lamp will light up and at the same time, the buzzer will sound.

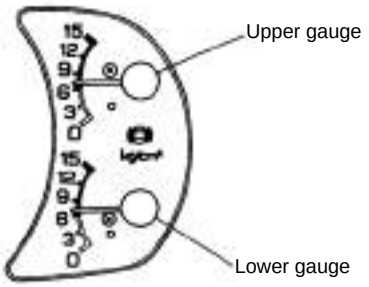

05114

Air Pressure Gauge

The air pressure gauge indicates the air pressure of the air accumulator. The red range indicates the air pressure is too low.

The upper gauge indicates the air pressure of the front wheel braking system, and the lower gauge indicates the air pressure of the rear wheel braking system.

Warning ⚠

When the pointer goes into the red range, it is very dangerous and it is absolutely not allowed to drive the truck.

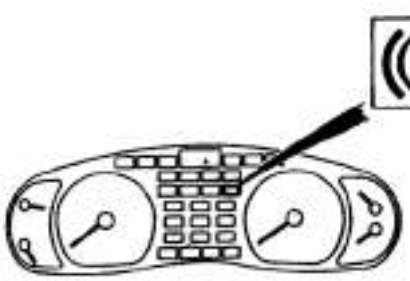
Z10391

● If the warning lamp (Ⓘ) lights up during the motion of the motor vehicle, the motor vehicle shall stop running and parked immediately at a safe place, and the engine shall be allowed to run at a medium speed until the normal air pressure is restored. As soon as the hand brake is pulled up, the buzzer will stop sounding.

● If the air pressure can not be restored, or it needs to take too much time to restore the air pressure, or the air pressure is over 9.5kg/cm2,it shows that there may be troubles in the air compressor or the pressure regulator. Consult with the nearest Hualing Automobile Service Station.

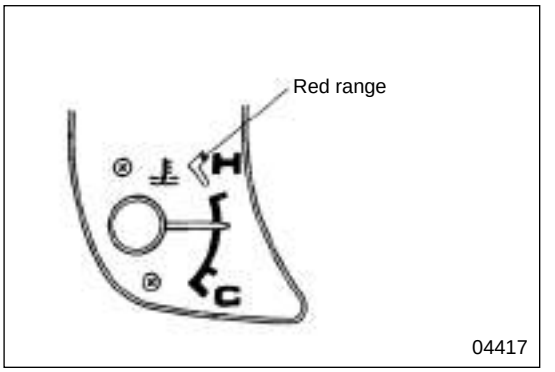

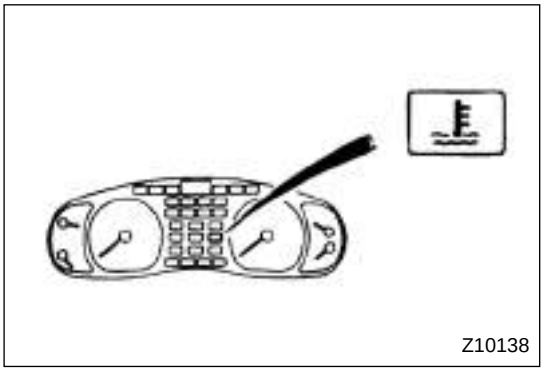

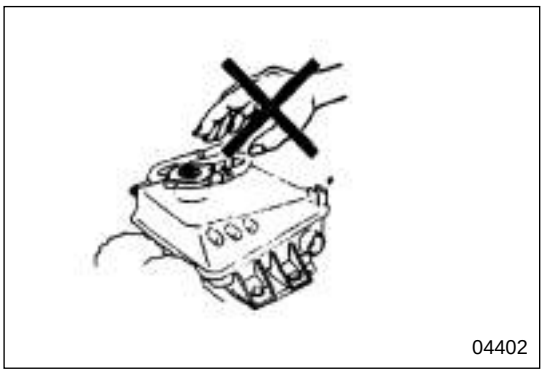

Water Temperature Gauge

It indicates the temperature of the coolant for the engine.
When the truck is in motion, it will be normal for the pointer to be within the white line zone.
In case the pointer goes into the red range, it shows that the engine is overheated. When the engine is overheated, warning lamp will light up and at the same time the buzzer will sound. If such state occurs, the motor vehicle shall be parked on a safe place immediately and the engine shall run at a speed a bit higher than the idle speed in order to cool down.
After the pointer returns to nearby the higher-middle point, the engine shall be shut down for performing the following checks and dispositions. Take necessary measures according to the check results.

1. Check the radiator and the hose for leaking of coolant.
2. Check whether the V-belt is ruptured or damaged and the tension of the V-belt is OK.
3. Check the coolant level. Top up it if necessary.
4. Check whether there is dust at the front end of the radiator and the fins of radiator.
5. If coolant leaks or overheating of the engine often occurs, they show there is a trouble in the cooling system. Go to the nearest Hualing Automobile Service Station to get it repaired.

Warning ⚠

The pressure cap of the radiator shall not be opened until the water temperature is lowered down. When opening the cap, rags shall be used to cover the cap. Unscrew the cap slowly. Care shall be taken to remove the cap, otherwise the hot water will blow-out to cause a scald.

Caution ⚠

● If the coolant temperature warning lamp lights up and the buzzer sounds at the same time in the motion of the truck, the truck shall be stopped with the hand brake pulled up, and the buzzer will stop sounding. At this moment, the trouble still exists.
● After the stop of the truck, the engine shall not be shut down at once, otherwise the water temperature will rise rapidly while agglomeration may probably caused in the engine.
● If cold water is injected into the sudden overheated engine, cracking will be caused to the engine. The water shall be added slowly little by little.

03363

Fuel Gauge

The fuel gauge indicates the fuel level of the fuel tank.
F: FULL
E: Empty
When the pointer is close to E, fuel shall be refilled timely in advance.

When the fuel tank is completely empty, air may probably enter the fuel system. Therefore, before refilling the fuel and start up the engine, the air entrapped must be discharged from the fuel system.

Note

The pointer of the fuel gauge usually follows up the actual fuel level. When the starting key is in ACC or LOCK position, the pointer still indicates the fuel level. However, if the truck is laid up for a long time, there may be certain changes in the indicated values.

Warning Lamp /Indicating Lamp

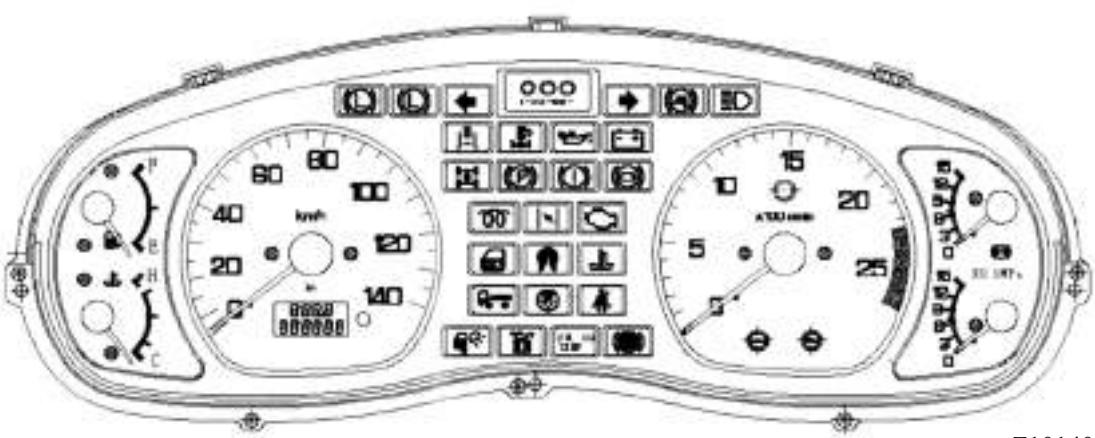

Z10140

● Basic arrangement of the warning lamps and indicating lamps is shown in the above figure. Varying with different specifications of the motor vehicles, there are still some lamps available that are not shown.

	Description of Warning Lamp /Indicating Lamp	Lamp Lights up	Page No. Referred to
	Direction indicator lamp	When the direction indicator lamp goes out	4-20
	Trailer brake indicating lamp <Tractor>	When the brake is used	8-2
	Headlamp high beam indicating lamp	When the headlamp high beam is ON	4-19
	Exhaust brake indicating lamp	When the exhaust brake is operating	4-20
	Power Take-off indicating lamp <Motor vehicle with gearbox power take-off>	When the gearbox power take-off is operating	9-2
	ENGINE OIL PRESSURE warning lamp	When the engine oil pressure of the engine is too low	5-7
		The buzzer sounds	
	ENGINE OIL FILTER warning lamp	Engine oil filter is clogged.	
	CHARGING indicating lamp	When a trouble occurs in the battery system	5-8
	Interaxial Differential Spider Locking indicating lamp	When the differential spider is locked	4-23
	Interwheel Differential Spider Locking indicating lamp	When the interwheel differential spider is locked	
	Hand brake indicating lamp	Parking brake is in operation	4-18
	Low air pressure warning lamp	When the air pressure in the air accumulator is too low	5-8
		The buzzer sounds.	
	(Red)Engine Serious Fault warning lamp<Motor vehicle with the electronic governor>	When a serious trouble occurs in the fuel ejection system	5-8
	(Orange)Engine Common Fault warning lamp < Motor vehicle with the electronic governor >	When there is an abnormality in the engine fuel ejection control system	
	DOOR UNCLOSED warning lamp	When the door is not closed	2-3
	COOLANT INSUFFICIENT/ENGINE OVERHEATED warning lamp	When the coolant level is too low, or the engine is overheated	5-9
		The buzzer sounds.	
	Driver's cab Tilting Locking warning lamp	When the driver's cab is in tilting operation, or is not clocked	12-11
	AIR FILTER ELEMENT warning lamp	When the air filter element is clogged	5-10
	Operation Lamp indicating lamp	When the Operation Lamp lights up	8-5
	High-speed Gear indicating lamp <Motor Vehicle with 10-step Gearbox>	When the auxiliary gear shifter control handle is at H (High speed gear) position	4-17
	Low-speed Gear indicating lamp < Motor Vehicle with 10-step Gearbox>	When the auxiliary gear shifter control handle is at L (Low speed gear) position	

► Engine Oil Pressure/ Warning Lamp

When the starting switch turns to ON position, this warning lamp will light up. After the engine is started up, it goes out. If it is goes ON during the operation of the engine, the vehicle shall be parked in a safe place and perform the following checks.

Note

In the cold season, sometimes this warning lamp will still keep ON after the engine is started up due to the increased viscosity of the engine oil. Therefore, this phenomenon is not abnormal.

● When the lamp lights up,
the engine oil pressure is extremely low.
1. Check the engine oil for the level. If the engine oil is not sufficient, make up it.
2. Check all parts of the engine for leaking.
3. If the oil level is OK and there is no leaking, it shows that a trouble occurs in the lubrication system, contact the nearest Hualing Automobile Service Station for repair.

Caution ⚠

● When the warning lamp lights up, the buzzer also sounds. The buzzer will stop sounding when the motor vehicle stops with the hand brake is applied.
● When the warning lamp is in a lit state, if the vehicle continuous to move, agglomeration of the bearings will happen to the bearings to result in the damages to the engine.

►FILTER CLOGGING Warning Lamp

● When the lamp lights up, it shows that the filter element is clogged, and the filtering element shall be replaced immediately.

Caution ⚠

It is absolutely not allowed to continue the running of the motor vehicle; otherwise the agglomeration will happen to the engine.

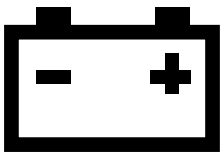

00129

► CHARGING Warning Lamp

When the starting switch is turned to ON position, it will lights up, and it will go out when the engine is started up and the A.C. generator starts to charge. During the operation of the engine, if there is any abnormality in the charging system, the CHARGING warning lamp will lights up, and in this case, the motor vehicle shall be parked in a safe place to perform the following checks.

1. Check the belt of the fan for any rupture and damage and for an appropriate tension of the belt.
2. Check whether the high-current fuse of the charging circuit is burnt out. If it is burnt out, it shall be replaced.
3. When there is no abnormality in the above-mentioned two check items, it means that a trouble happens to the charging system. Make contact with the nearest Hualing Automobile Service Station.

00127

► AIR PRESSURE Warning Lamp

Warning ⚠

When the AIR PRESSURE warning lamp lights up, the braking effect will be reduced remarkably, and it is extremely dangerous and it is absolutely not allowed to continue the running.

If the air pressure in the air accumulator of the braking system decreases to below the min. safety level, the AIR PRESSURE warning lamp will light up and at the same time the buzzer will sound. In this case, the motor vehicle shall be parked in a safe place, and the following checks shall be performed.

When the hand brake is applied, the buzzer will stop sounding.

1. Run the engine at a medium speed until this warning lamp goes out.
2. Check whether there is any leaking at each tube and pipe connection, etc.
3. In case the warning will not die out or will light up again not long after it goes out, stop the running of motor immediately and go to the nearest Hualing Automobile Service Station for making inspections and maintenance.

00125

► COOLANT LEVEL/OVER-HEATING OF ENGINE Warning Lamp

When the coolant of the engine is not sufficient or the engine is over-heated, this warning lamp will light up and at the same time the buzzer will sound. If the warning lamp lights up and the pointer of the water temperature gauge goes to the red range, it means the engine is over-heated. If the warning lamp lights up, but the pointer of the water temperature gauge are at a normal position, it means there is a deficiency of the coolant. In case the warning lamp lights up, perform the inspections and take the necessary measures as follows:
If there is a failure in parking braking operation, the buzzer will sound.

04402

- When the coolant is deficient,

1. Shut down the engine and wait until the coolant is cooled down.
2. Check whether there is any leaking in the radiator and its tubing
3. Remove the cap of the water tank of radiator and refill it with cooling water.
4. In case there is any leakage of water found, make contact with Hualing Automobile Service Station.

Warning ⚠

The pressure cap of the radiator shall not be opened until the water temperature is lowered down. When opening the cap, rags shall be used to cover the cap. Unscrew the cap slowly. Care shall be taken to remove the cap, otherwise the hot water will blow-out to cause a scald.

Caution ⚠

This warning lamp must not be neglected; otherwise the temperature of the engine will rise excessively to cause agglomeration. When the warning lamp lights up, running shall not be continued.

- When the engine is overheated

Run the engine at a speed that is a bit higher than the idle speed to allow the engine to be cooled down.

00137

►AIR FILTER Warning Lamp

If the air filter element is clogged, this warning lamp will just light up. In this case, the filtering element shall be cleaned immediate

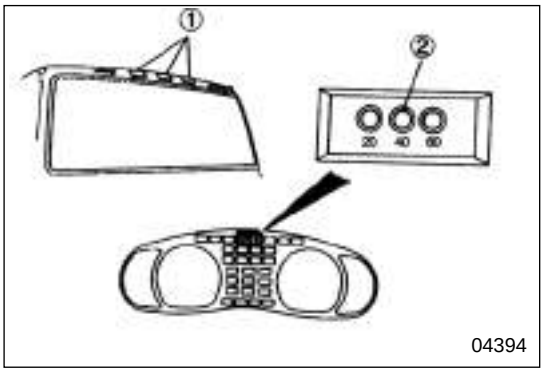

04394

Speed Indicating Lamp

The SPEED Indicating Lamp ① installed in the driver's cab and the SPEED Indicating Lamp ② installed in the gauge light up based on the speed of the motor vehicle simultaneously. (It is an option for some models of the motor vehicles that are not provided with the speed control).

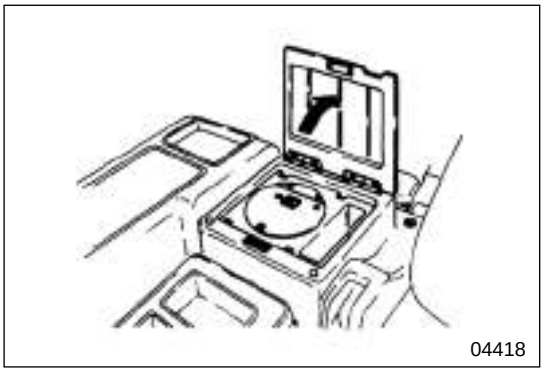
04418

Operation Record Form (for Optional Parts)

Operation Record Form is used to record the speed, mileage, or other information about the operation of the motor vehicle. For the specific contents, please refer to the description of the Operation Record Form in the other instruction manual.

Starting and Driving Methods

04404

Precautions during Startup

● By visual inspection or by means of mirrors, confirm that there is no person or obstacle below, in front of, and at left and right side of the vehicle.
● Confirm if the red alarm lamp lights up.
● Confirm the release of hand brake handle.
● Start the vehicle up smoothly and slowly. Fast startup or half engaged clutch for long period will damage the clutch.

Note

● During startup of a vehicle with electronic governor on a slope, when a forward gear is engaged but the vehicle goes astern, the engine will rotate in the reverse direction. At this time, a protection device against engine reverse rotation will act and the engine will stop.
Please reset starting switch to ACC, and then start the engine again.

Precautions during Driving

04405

During driving, pay attention to the following issues. Besides, in case of abnormity, quickly stop the vehicle and locate the cause. If cause is not found or you cannot repair on yourself, contact nearby Hualing Automobile Service Station.
During driving, never turn the starting key to a position other than ON.
By any chance this key is turned to position ACC, the engine will stop.

Warning ⚠

After stop of engine:
● Braking pneumatic pressure cannot be supplied, resulting in failure of brake;
● Steering wheel will be heavy to operate, resulting in danger;
● Alarm lamp and instrument lamp circuits may stop to operate, possibly resulting in fault of electric parts.

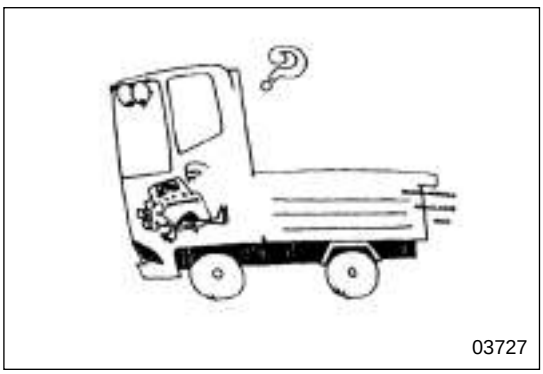
03727

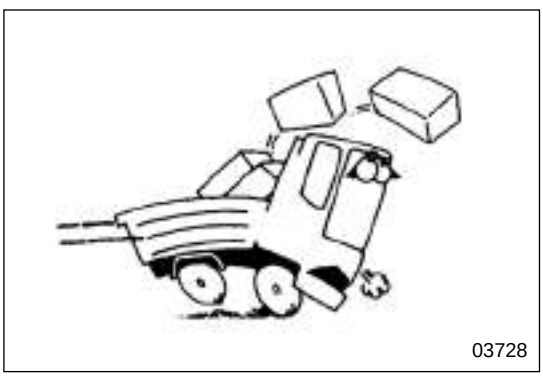
03728


04406


03948

● After removal of starting key, steering wheel will be locked and cannot be operated.

● During driving, by any chance engine stalling occurs, calmly step down brake pedal to reduce speed and park the vehicle at a safe place.

● When red alarm lamp lights up, quickly park the vehicle at a safe place for suitable treatment.

Notes

● Once hand brake is applied, buzzer will stop.

● Except for emergency, avoid sharp turning and sharp braking. Especially during high-speed running, these may cause turn-over; hence full attention shall be paid to them. If the cause is not found or you cannot repair on yourself, contact nearby Hualing Automobile Service Station.

● In case abnormal noise, vibration, smell, steering wheel operation or brake effect is noticed, quickly park the vehicle at a safe place and find causes.

● Never run the vehicle with clutch cut off or change lever at neutral position; otherwise engine braking function and exhaust braking function may fail, increasing burden of foot brake.

● Avoid frequent use of clutch in half engaged status. During driving, if you place your foot on clutch pedal, the clutch will be in a half-engaged state. This way of driving will shorten service life of clutch.

● When driving on a narrow road or turning left or right, pay full attention to wheel difference (between inner and outer wheels) and use rearview mirrors to confirm safety.

● Continuous high-speed running has adverse effect on engine and other devices. Suitably reduce running speed.

● The steering wheel must not be fully turned to one side for more than 10s; otherwise power steering gear may fail.

● When running at high-speed in a rainy day, tires may float and slip on a water film on the road. This phenomenon is referred as “water floating”. At this time, steering wheel and brake will totally fail. To avoid this, run at medium speed in rainy days. In particular, when tires are worn and have no tread, this phenomenon is more likely.

● Even if the vehicle is fitted with ABS, in rainy days and on snowy road, run at medium speed.

● ABS only functions to prevent locking of brake. In rainy days and on snowy road, if vehicle speed is relatively high, braking distance will be longer, bringing danger.

04407

04408

Secrets of Economic Driving

To save fuel and extend tire service life, pay attention to the following issues:

● Warm up and operate engine till pointer of water temperature gauge starts to swing.

● Avoid no-load high-speed idling of engine; otherwise fuel will be wasted and the engine will be adversely affected.

● Avoid rapid startup, hard acceleration and emergency braking.

● During acceleration, change gear before engine reaches highest rotation speed.

● Control vehicle speed as much as possible and run at constant speed. Unnecessary acceleration and braking will increase fuel consumption.

● Adjust to obtain suitable tire pressure.

● Use a way of minimum air resistance to load cargo.

● Carry out inspection before starting and periodic inspections.

Method of Braking

Warning ⚠

● During running of vehicle, if alarm lamp lights up, quickly park the vehicle and locate causes.

● Except during an emergency, avoid emergency braking. Emergency braking may cause locking of tires and slipping of the vehicle. When running with no-load or light cargo and down a slope or on muddy, snowy, frozen road surface or other slipping road, pay sufficient attention. Emergency braking will result in early wear of tires, and adverse effect on other devices. Emergency braking will also cause great impact on passengers and possible injury.

● Never step down brake pedal continuously; otherwise braking pneumatic pressure will be lowered, causing poor braking effect.

● Note not to use foot brake too frequently; otherwise the brake will be overheated sometimes, resulting in thermal deterioration and low braking effect.

● When driving the vehicle with ABS (option) on muddy, snowy or frozen road, in rainy days, or on

other slippery road, during sharp braking, locking of tires can be avoided, but small adhesion force on slippery road will increase brake distance.

Note

"Deterioration of brake performance" refers to excessive wear between brake drum and brake shoes, and abnormal temperature rise, hence loosing normal friction status and lowering brake performance.

● Brake distance will change somewhat according to vehicle running speed, load and road conditions.

● When driving in a rainy day or on road surface covered with water, rain water will enter brake drum, thus lowering brake efficiency. At this time, lightly step down brake pedal to confirm brake performance. If braking is not functioning well, first confirm safety in front of and at back of the vehicle, then lightly step down pedal and run at low speed till braking is restored.

● When brake pedal is stepped down hard, the brake will generate strong braking force. Therefore, except during an emergency, avoid hard stepping of brake pedal. Brake distance will change somewhat according to vehicle speed, load and road conditions.

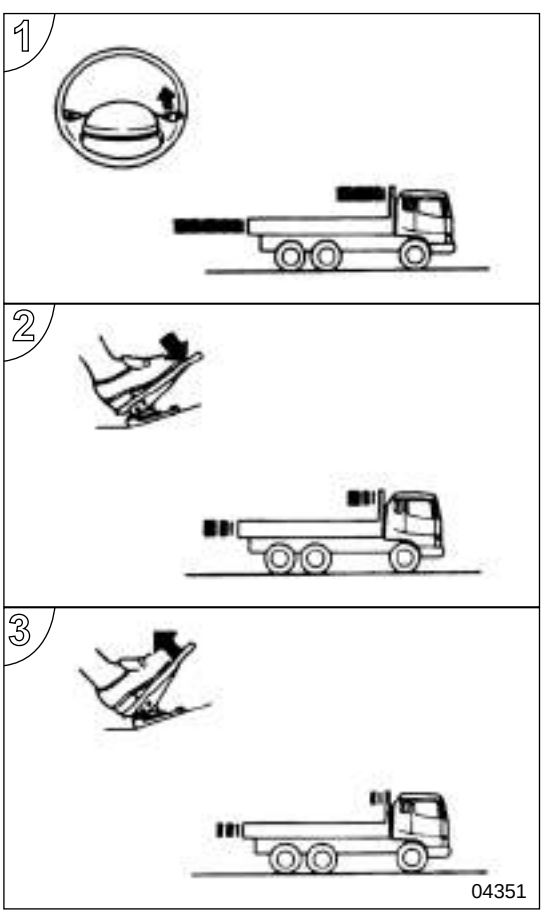

1. Before using foot brake, effectively use engine braking function and exhaust braking function, so as to reduce speed.

2. When approaching expected place of parking, step down brake pedal to its half stroke.

3. Maintain half stroke of brake till target place is just in front of you. Then slowly release clutch (about 1/2 or 1/3 of the stroke maintained), At this time, if you release pedal completely, the vehicle will slide by inertia and pass the target.

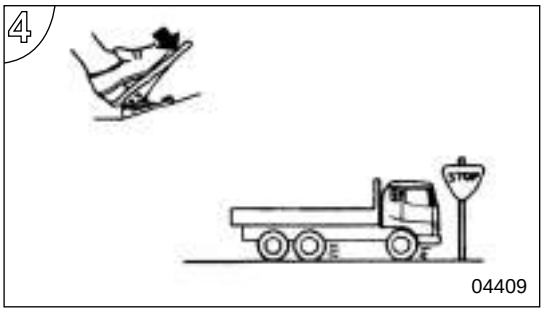

04409

4. In front of target, again slightly step down pedal so that the vehicle stops completely.

● If fast stop is required due to emergency, fully step down brake pedal.

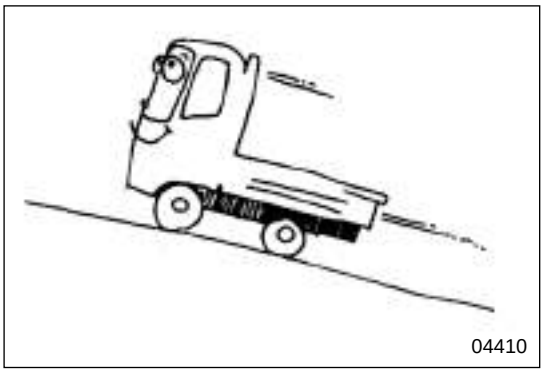
04410

Going up or down a Slope

► Going up a slope

When speed starts to fall, timely change to lower gear to avoid engine burden.

► Going down a slope

● Before going down a steep or long slope, check braking performance to confirm normal brake.

● When going down a slope, use the same gear as for going up the slope. In addition, also use engine braking and exhaust braking functions for low-speed and safe driving. Never run down a slope at high-speed.


04411

Warning ⚠

● Never run with change lever at neutral position; otherwise engine braking function and exhaust braking function will fail, and burden of foot brake will increase, causing overheat of foot brake and wear of brake shoes.

● Note to avoid frequent use of foot brake; otherwise the brake will be overheated, resulting in thermal deterioration and low braking effect.

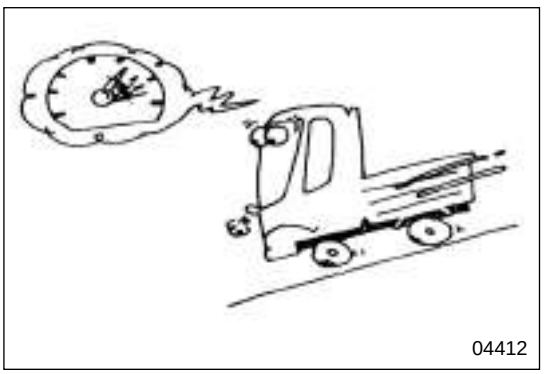

● Fully reduce speed and then change to lower gear. Skipping to a lower gear or high-speed engine operation will cause engine overspeed after engaging the lower gear. Normally, you can shift to lower gear when engine speed falls to about 1,500rpm. (For a vehicle with 10-gear transmission, first reduce engine rotation speed to 1,800rpm, and then move auxiliary transmission handle from H to L). Never let tachometer pointer enter red zone.

Note

"Engine overspeed" refers to engine speed exceeding highest speed. This status will increase load at each part of engine and damage the engine.

On Bad Road and during Bad Weather

● When running on macadam or muddy road, use low gear and run at constant speed.

When running on muddy, snowy, frozen or other slippery road, use differential lock button to prevent loss of driving force of driving wheels.

● When running on uneven road, fully lower gear. Also pay attention to avoid hitting obstacle under the vehicle.

● In rainy days, road surface is most likely slippery. Avoid emergency braking; otherwise great danger will exist. The period of start of raining is most dangerous.

● When running on road surface covered with water, water will enter brake drum causing reduced braking efficiency. At this time, use low speed and lightly step down brake pedal to dry the brake.

● In case of fog, turn on fog lamps, note road centerline and vehicles in front of you, and run at low speed.

● When running on snowy or frozen road, use tire chains or snow tires and run at low-speed. Emergency braking or sharp turning will cause slipping, hence extremely dangerous. Full attention shall be paid to this note.

04414

Parking

Warning ⚠

● Avoid parking on a steep slope. If this is a must, make sure to lock wheels with wood.
● After using the vehicle, exhaust pipe has high temperature. Avoid parking near inflammables (e.g. dry grass).
● If you take a nap inside the vehicle, make sure to stop the engine. Accident may occur if you happen to touch change lever or pedal.
● When parking in a hot day, do not place lighter, carbonic acid tin or glasses etc. in vehicle.
● Due to high temperature inside the vehicle, lighter and inflammables etc. may cause spontaneous ignition, and carbonic acid drink and beer cans may rupture. Crack or deform may occur on plastic lens and coating film on plastic glasses.

● Select a flat site for parking as much as possible.
● Stall engine and pull hand brake handle tight.
● To prevent theft and consumption of battery power, it is necessary to remove starting key and lock doors.

Caution ⚠

● Ⓟ Light-up of indicator has nothing to do with hand braking effect. Ensure pulling of hand brake handle.
● If the starting key is placed at position ON or ACC for a long time, battery over-discharge may occur.

Method to Carry Cargo

Type of cargo	Method to carry cargo	Method to protect cargo compartment
Admixture, sandy soil, gravel, brick, other loose cargo	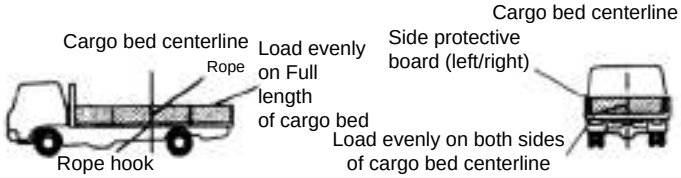	When carrying sand-stone, gravel, brick etc., protect side boards and hang ropes
Light cargo	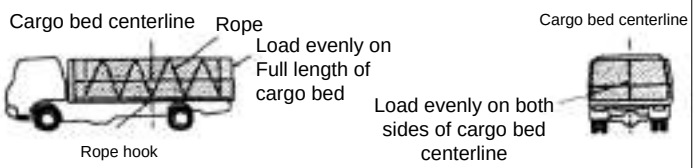	Hang ropes by means of rope hooks
Large cargo e.g. machinery and equipment Note: Center of cargo bed refers to point of intersection of two diagonals of compartment bottom plate. Cargo bed centerline refers to the line passing this point and perpen-dicular to the bottom plate	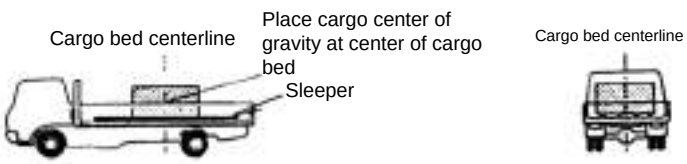	Lay steel plate or plywood plate on compartment bottom plate, or longitudinal sleepers

Type of cargo	Method to carry cargo	Method to protect cargo compartment
	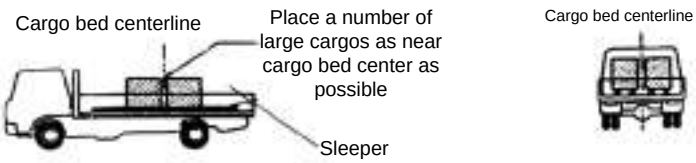	Hang rope by means of rope hook
	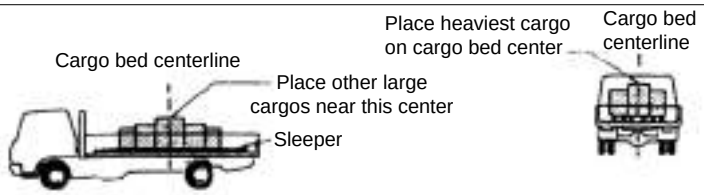	
Timber, electric wire stands, steel pipes and other long cargos	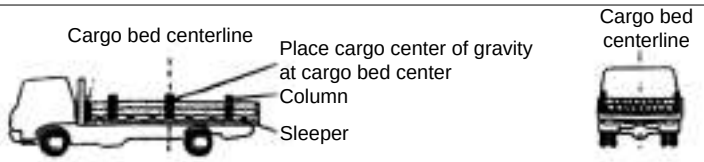	Provide protective pad (wood or steel) on front board, support columns or sleepers

Dump Truck

This chapter describes the general usage of dump truck. For detailed instruction, please read the dump truck instruction manual composed by the manufacturer of dump truck.

04419

Items Concerning Dump Truck

① Power-take-off switch
The tilting truck body is lifted up and lowered down by hydraulic power. The power-take-off switch is used to control the engagement and disengagement of the power-take-off for the driving hydraulic pump.
② Tilting operation lever
It is used to lift up or lower down the tilting truck body. During operation, the button on the end of the lever shall be pressed down.
③Power-take-off indicator
Turn the power-take-off switch to ON position, when engaging the power-take-off, this indicator will light up.


03572


03573


03574

Rise up and down of the Tilting Truck Body

Warning ⚠

- In the lifting up or lower down action of the tilting truck body, it is absolutely prohibited to enter into the bottom part of the truck body. Before operating the dump action, make sure there is no person or obstacles etc. in the surroundings of the dump truck and the truck body.
- The tilting operation shall only be carried out on sound and flat ground. If carrying out tilting operation on inclined or soft ground, it will cause the roll-over accident or the tilting mechanism and components twisted or damaged.
- Do not let the truck under truck body lifting up status for long time, otherwise the hydraulic cylinder will gradually draw back and lower down the truck body. The truck body must be lowered down before leaving the truck.

►Up and down of truck body

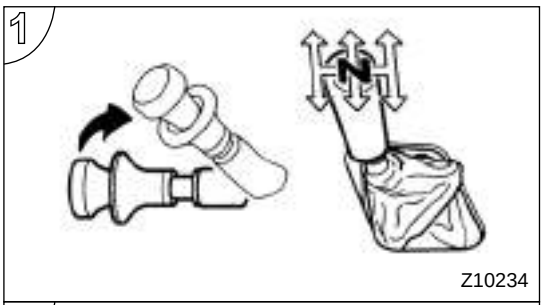

1. Stop the vehicle and make sure that manual brake is engaged. Put the shift lever to neutral position.

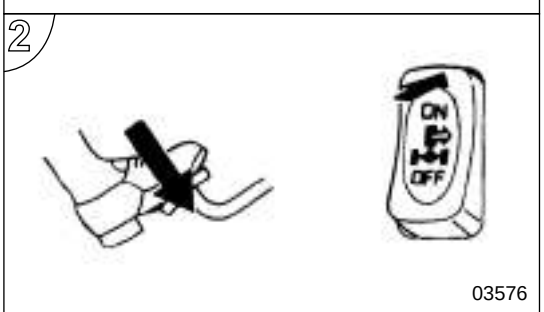

2. Step down the clutch pedal, and push the power-take-off switch to ON position. After the indicator lights up , slowly release the clutch pedal.

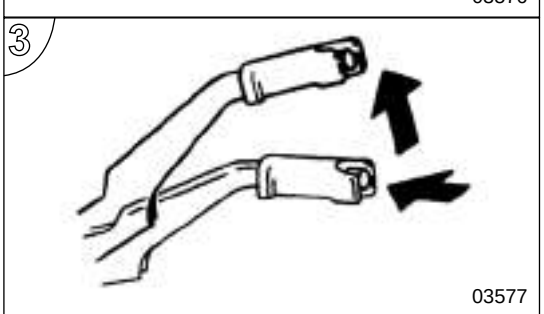

3. Press down the button on the end of the tilting operation lever, while pushing the lever to the position for lifting up the truck body. The lifting speed can be increased by slightly stepping down the accelerator pedal.

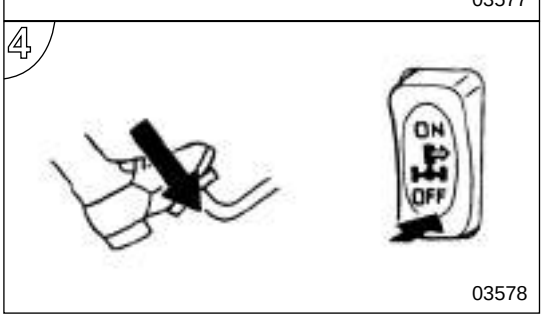

4. It will automatically stop after the truck body is lifted to the highest position. Step down the clutch pedal, and turn the power-take-off switch to OFF position.

Caution ⚠

Do not change the engine speed abruptly or step down accelerator pedal too fast, such kind of operation will damage the hydraulic pump.

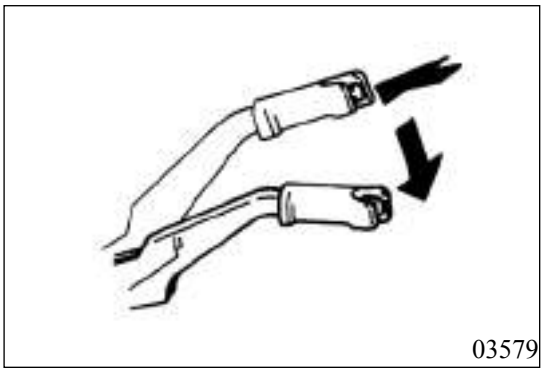

►Lower down the truck body

Check to make sure there is no obstacle nearby the truck body, and confirm on other safety conditions. Press down the button on the end of the tilting operation lever, while pushing it to the position for lowering down the truck body, the truck body will be lowered down automatically.

Caution ⚠

During the lowering down operation, do not operate the lever abruptly; otherwise it will cause the damage of various components. The lever shall be always operated slowly.

Stop the truck body in the middle

►Stop during the lifting of the truck body

Step down the clutch pedal. First push the power-take-off switch to OFF position, and then let the foot leave the clutch pedal.

Push the tilting operation lever to the middle position (in the middle between lifting up position and lowering down position), then truck body will stop at the current position.

Caution ⚠

Do not leave the tilting operation lever in middle position for long time; otherwise the hydraulic oil temperature will increase excessively, which will cause damage of the hydraulic pump. When the tilting operation lever is in middle position, the driver shall remain in the cab and be ready to operate the tilting operation lever.

Stop during the lowering of the truck body

Move the tilting operation lever to tilting lifting up position

03580

Before Starting up the Vehicle

Warning ⚠

- It is extremely dangerous to drive the dump truck with the tilting truck body inclined. Before starting up, the tilting truck body must be completed lowered down.
- It is also extremely dangerous to drive the dump truck with the power-take-off switch in ON position. Such operation will cause accidental rising up of the tilting truck body, which will cause damage to the hydraulic pump.

- Make sure that the tripping operation lever is locked in lowering down position.
- Check the tilting truck body to see if it is completely lowered down, and check if the power-take-off switch is in OFF position.

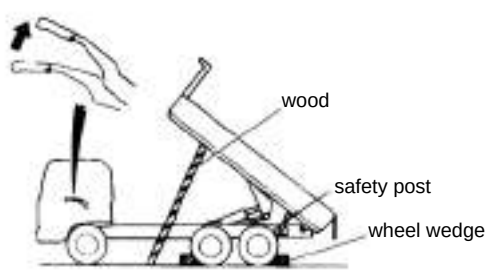

03582

Inspection and Maintenance

Warning ⚠

It is not allowed entering into the lower part of the tilting truck body, when the tilting truck body is in the action of lifting up or lowering down.

In case it is necessary to enter the bottom of the lifted cargo for inspection or reparation, following safety measures shall be adopted.

1. Completely apply the manual brake, and use wheel wedges to lock up the wheels.
2. Rise up the truck body, and then cut off the power-take-off switch, and stop the engine.
3. Install the safety post, and lower the truck body until the safety post is correctly into the locator in the truck body.
4. To ensure safety, use two 10×10cm (or thicker) woods or other objects of the same strength to support the two sides of the truck body.
5. Make sure that the truck body operation lever is locked in lifting up position.

Operating Methods of Tractor

This chapter describes general operation method of tractor. For details of the coupler, please refer to the operation instructions for tractor compiled by the tractor manufacturer.

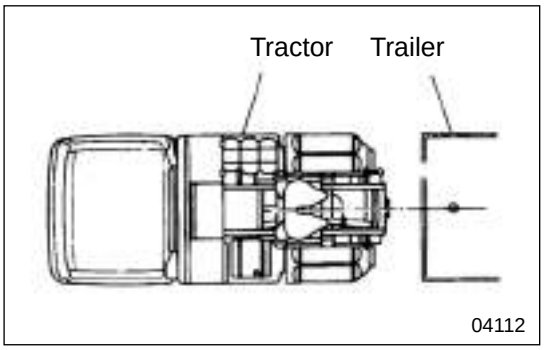

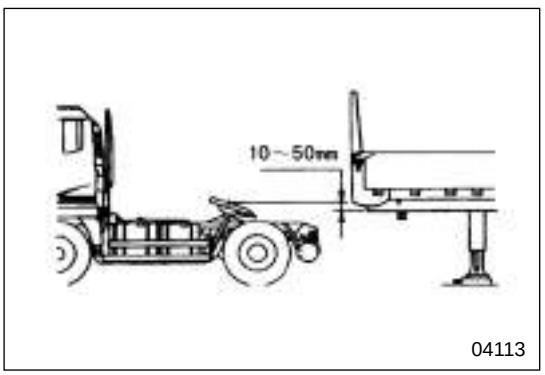

Coupling Method of Trailer

►Coupling of trailer

Prior to coupling the trailer, choose a level ground and insert wood block (option) under each wheel.

1. Move backward the tractor until the tractor is in front of the trailer. Make sure the central line of the tractor and the trailer aligned.
2. Adjust the trailer undercarriage, making the main plate center of the tractor coupler 10 ~ 50cm higher than the trailer body carrier plate.
3. Make sure the coupler claw is at open position. If it is closed, open it.
4. Move the tractor backward slowly to get it coupled with the trailer.
5. Apply hand brake of the tractor, then stop the engine.
6. Make sure the coupler claw is at completely locked position. Besides, check the coupling state on left and right, and confirm there is no clearance between the coupler main plate and the body carrier plate. If any abnormality is found, uncouple the tractor, and couple it again.

Warning ⚠

The vehicle cannot be started until the trailer is well coupled. If the trailer were not coupled tightly, such grave accident as the trailer uncoupled from the tractor would happen. Make sure the coupler claw has been completely locked, and confirm there is no clearance between the main plate and the body carrier plate.

Caution ⚠

If the carrier plate height of the trailer body is not properly adjusted, or the tractor and the trailer not properly aligned, damage would happen on the tractor and trailer.

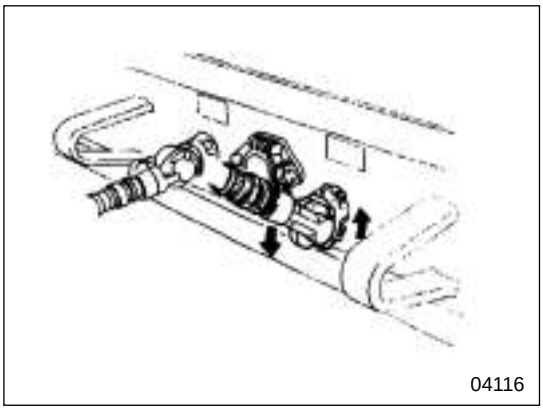

►After trailer coupled

1. Connect main air hose (yellow) and emergency air hose (red) to each connector of the trailer.

Note

To prevent connection mistake, the air hose is distinguished by color. When connecting, connect the hose of the same color. The hose color is as follows:
Main air hose: yellow
Emergency air hose: red

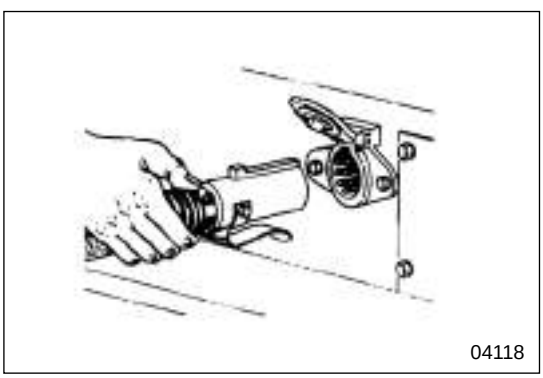

2. Insert the jumper cable to trailer socket. At this time, the convex part of the plug must match with the concave part.
3. Start engine to check whether barometer indicates standard barometric pressure value. And check all parts for air leaking.
4. Operate switch of the lighting lamp and turning indicator and step on the brake pedal. Check whether all lamps on the tractor and trailer are lit. Tie the jumper cables to prevent collision when the vehicle is turning.

Caution ⚠

When the tractor-trailer is running, take care to prevent the air hose and the jumper cable to be in the way of other parts, etc.

5. Move the tractor forward or backward slightly. If the tractor fails to move, it indicates the coupling of the tractor and the trailer is firm.
6. Lift up the trailer undercarriage completely, release the tractor hand brake, and remove the wood block from the wheel.

Caution ⚠

Placing any goods on the trailer flat plate is not allowed, otherwise, it will prevent free movement of the trailer when the tractor is turning, or even the body will be damaged.

► When uncoupling the trailer

1. Park the vehicle on a level ground when the tractor and the trailer is in alignment.
2. Apply the tractor brake, and lock the wheel with wood block.
3. Fall the trailer undercarriage to ground.
4. Separate the main air hose and the emergency air house. Connect the separated end of each hose to the connector of the tractor.
5. After separating the jumper cable from the trailer, connect the separated end of the cable to the socket of the tractor socket.
6. Unlock the coupler claw.
7. Move the tractor forward slowly, and uncouple it from the trailer.

Caution ⚠

When separating jumper cable, grasp the cable plug part. Do not pull the cable part by force; otherwise the internal wire may be broken.

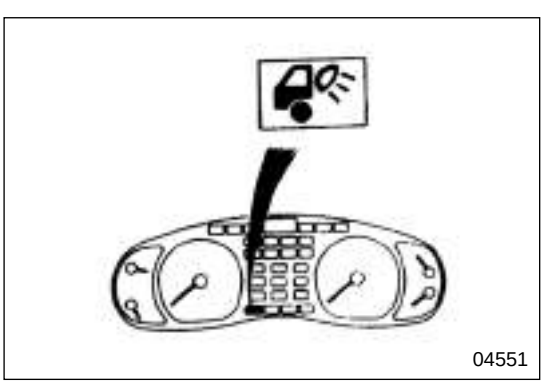

►Semi-trailer tractor with working lamp

When the working lamp switch is set to ON, the indicator lamp in the instrument panel is lit

Warning ⚠

To prevent glare of the rear vehicle driver, before start the vehicle, the working lamp switch must be turned off and make sure the indicator lamp is off.

Tractor-trailer Running

- Always pay attention to operation of the trailer.
- When the vehicle is turning left or right, or running to sharp bend road, the trailer would have rapid inward swinging. When running, always give consideration to this characteristic of trailer.

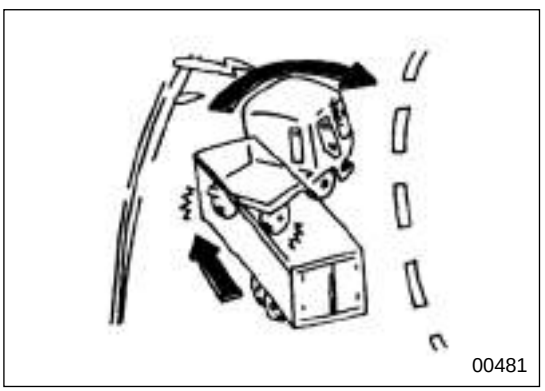

Folding Phenomenon

When turning, the coupler between the tractor and the trailer would have rotating movement on the hinge. Therefore, if sharp turning or rapid braking operation is carried out on the slideway, the trailer would rotate around the king pin, rapid swinging toward the tractor would happen.
Such phenomenon is called “folding phenomenon”.

►Avoiding of folding phenomenon

- To avoid rapid operation of the brake and steering wheel.

Always drive the vehicle with care may reduce rapid braking. When running at high speed, on turning road, downhill driving, or running on snow road, frozen road, or on other slideway, especially rapid brake operation and rapid change to low gear shift operation must be avoided (including operation of skip to low gear shift).
To prevent folding phenomenon of the vehicle, use engine brake, exhaust brake to reduce the speed slowly.

- Rapid brake operation and rapid turning operation at the same time is absolutely forbidden, which is extremely dangerous.
- Folding phenomenon would happen if the brake force of the wheel brake is not balance. The brake must be inspected and repaired periodically.
- Over inflation of tyre would reduce contact area of the tyre and the road, becoming reason of early wearing of the wheel. Make sure the tyre pressure comply with the standard.
- Check whether the goods are loaded uniformly.

If the goods are offset in front of the trailer, the rear wheel of the trailer will be liable to block. If the goods are offset at rear part, the rear wheel of trailer will be liable to block.

Operation Instructions of ABS

1. Performance of ABS system

● ABS is an electronic system to monitor and control vehicle speed during braking. It operates together with the conventional air braking system.

● ABS monitors the wheel speed at any time and controls braking when the wheel is liable to block, this system has improved the vehicle stability and improved the vehicle controllability by reducing wheel blocking during braking.

● This system controls every wheel, if ABS fails on a wheel, the conventional brake of this wheel still works.

● Advantages of ABS:

● Steerability of the vehicle maintained, steering wheel can still be turned at emergency braking, avoiding roadblock.

● Braking distance shortened. Under the same condition, the braking distance can be shortened by 10% for maximum on the general road pavement (cement, asphalt, etc.) and can be shortened by 30% for maximum on slide pavement (ice, snow, etc.).

● Tyre wearing and maintenance cost reduced.

● Driver's mental load lightened.

● And traffic accident reduced.

2. Composition of ABS system

2.1 Composition parts of ABS system:

● Gear ring, sensor, magnetic valve, sensor and magnetic valve wire, electronic control unit (ECU), ABS warning lamp, etc.

● The gear ring cooperating with the sensor to produce induced voltage signal, ECU receives and processes the electrical signal coming from the sensor, and sends the signal to magnetic valve, the magnetic valve adjusts the brake pressure of the brake chamber according to the signal sent from ECU. ABS warning lamp is used to remind the driver whether the ABS system is operating normally.

2.2 Arrangement of ABS system

Arrangement method of 4S/4m (4 sensors and 4 magnetic valves) shall be adopted.

3. Installation and testing of each part of ABS system

3.1 Installation of gear ring

● Gear ring has to be installed on the hub with a safe method, in addition, running conditions have to be considered (temperature, etc.). H8/S7 is recommended for fitting of the gear ring and the hub.

● There are two methods for gear ring installation: one is heating, if the gear ring surface treatment temperature permits the heating temperature to be over 150℃, heat thoroughly the gear ring to approx. 180~200℃ and maintain the temperature for 5-10min, thus great external force is not required for the installation. Another method is press fit: apply force uniformly along the whole ring on press with special equipment, but do not apply too great force. Knocking at the gear ring with hard thing is strictly forbidden, so as to avoid damage of the ring surface and the ring shape. The axial deviation after installation will be <0.2mm, the deviation of the adjacent gear height will be <0.04mm.

3.2 Sensor

3.2.1 Installation of sensor

Under normal condition, the installation hole of front axle sensor clamping collar is on the brake bottom plate or knuckle, installation of the rear axle needs a fixed sensor clamping body, this clamping body has to be mounted on the static part of the axle and must have sufficient rigidity and mounting stability, so as to reduce vibration effect. Axial of the sensor must be perpendicular to the radial of the gear ring, with maximum angle deviation of +2.5°. When mounting, apply grease to the bushing, mount the clamping collar until flange contacts the clamping collar, then screw in and push the greased sensor to the bushing, until it contacts the gear ring, after turning of wheel, the sensor and the gear ring will form a gap automatically. When mounting, never knock at the sensor with hard thing. For mounting of front axle and rear axle, see Fig. 1 and Fig. 2.

3.2.2 Fitting of sensor and gear ring

Gap between the sensor and the gear ring must be less than 0.7mm, not exceeding 2mm for maximum. Ratio of the maximum induced voltage and the minimum induced voltage of the sensor must

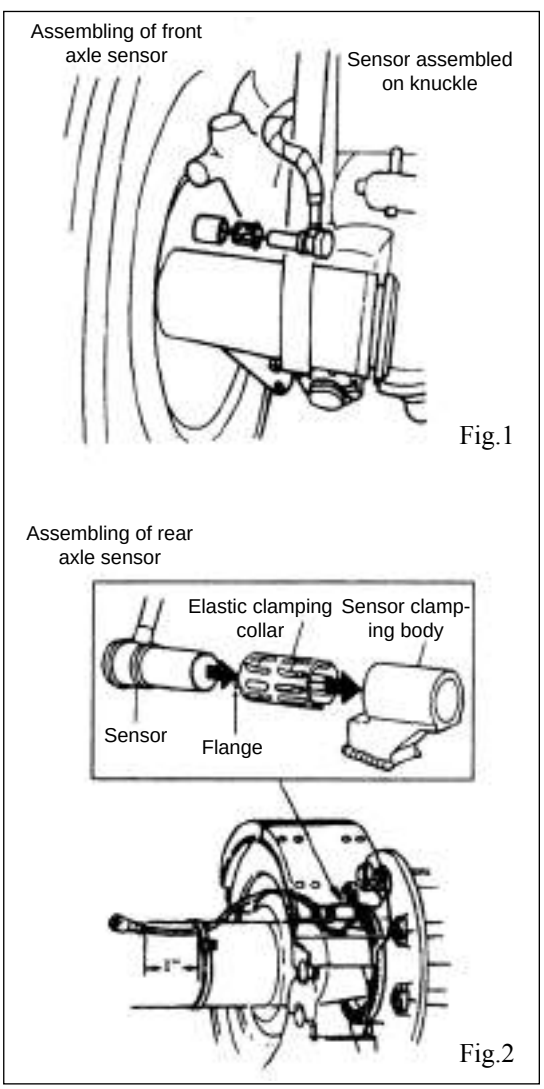

Mounting fit of sensor and gear ring

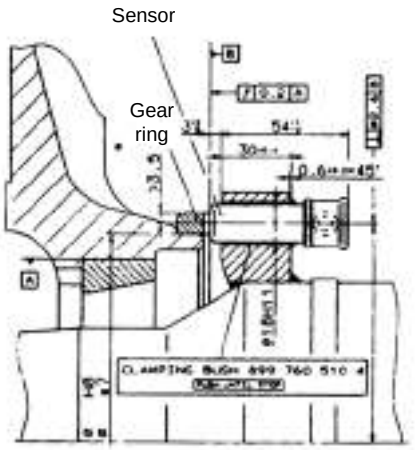

Fig.3

be ≤2.2-2.5. Mounting of gear ring and sensor should be completed normally in axle workshop, and voltage test of the sensor should be made, and deliver to the vehicle manufacturer after all the things are qualified. For mounting fit of the sensor and the gear ring, see Fig. 3.

3.2.3 Testing of sensor

After mounting of gear ring and sensor, test shall be made for the induced voltage of the sensor:

a) Turn the wheel with hand until 30rpm reached.

b)Measure voltage between the two poles of the sensor with multimeter.

c) When the wheel speed is over 30rpm, the sensor voltage must be >0.20V, otherwise ABS does not work, and ABS warning lamp will be lit.

Resistance of the sensor is between 1100Ω and 1250Ω.

3.3 Magnetic valve

3.3.1 Installation of magnetic valve

Magnetic valve shall be installed on the frame and the connecting tube between the brake air chamber should be as short as possible, not exceeding 1.5m for maximum, air tube diameter greater than 9mm. Port 1 is connected to air supply, and port 2 is connected to brake air chamber. Magnetic valve exhaust port faces downward, with deviation of ±30°.

3.3.2 Testing of magnetic valve:

a) Make brake and listen to the exhaust sound of the magnetic valve.

b) Start the engine and listen to circulating sound of the magnetic valve, if no sound circulating, check the circuit connection.

c) Drive the vehicle to verify whether ABS lamp works normally. The resistance between each terminal of the magnetic valve and ground is 14-15.5Ω.

3.4 Connection of wire

Wire has to be connected by strictly following 841 801 151 0 wiring diagram, crimp connection of socket connector shall follow technical requirement of WABCO, and use special tool, and the wire must be fixed by WABCO special bundling tie.

3.5 Electronic controller unit ECU

- There are two power supplies to be connected

with ECU, one is from battery, which is power supply of magnetic valve; and another is from ignition switch, which is power supply of ECU, the maximum voltage of the two power supplies is 30V, minimum is 18V.

● ECU installation: ECU of ABS D Basic must be installed in capsule, so as to prevent water intruding, and must be far away from heat source, and avoid collision of other objects.

4. How to judge whether ABS works normally?

Normally by observing ABS warning lamp and emergency braking under the condition when the speed is higher than 40km/h.

4.1 Observing ABS warning lamp

Function of ABS warning lamp is to make the driver know state of the ABS system, also is used to display diagnosis flashing code.

Working condition of the ABS warning lamp is as follows:

Turn On ignition switch	ABS lamp is lit instantaneously (about 3s), and then gone off.	Indicating ABS system is normal
	ABS lamp is lit continuously	If the vehicle speed is higher than 7km./h, the lamp goes off,which indicates ABS system is normal.If the vehicle speed is higher than 7km./h, the lamp does not go off, which indicates the ABS system is fault.

Note: after one diagnosis, if ABS system is normal, the ABS warning lamp will not go off until the vehicle speed is higher than 7km./h. The situation after then is as described in form above.

4.2 Emergency brake

On wide and flat road, with speed higher than 40km/h, step on the clutch and step on the brake pedal suddenly, then observe the braking mark. If there is no drag mark, it indicates the ABS works, if all the wheels have drag marks or one wheel has drag mark, it indicates ABS system does not work, or the ABS system for a wheel does not work. When this case occurs, diagnosis and maintenance shall be made for ABS system of the vehicle or

ABS system of a wheel.

4.3 Confirming ABS is working
a) Turn On ignition switch
b) Waiting for ABS lamp Off
c) Listening to sound circulating of ABS magnetic valve:
1-2-3-4-1&2-3&4 totally 6 times
1—right front wheel
2—left rear wheel
3—left front wheel
4—rear right wheel
4.4 Diagnosis method of ABS system
4.4.1 Diagnose with diagnosis instrument: used for vehicle leaving production line diagnosis
4.4.1.1 Diagnosis instrument functions
- Fault memory
- Make ABS parts operate, e.g.: ABS lamp, magnetic valve, etc.
- Measure voltage, wheel speed, etc.
- Read out ECU parameters.
- ABS system diagnosis
- Used as multimeter, measuring voltage, resistance, etc.

4.4.1.2 The diagnosis system of the diagnosis instrument mainly consists of the following parts:
- Diagnosis instrument: 446 300 320 0
- Diagnosis wire: 894 604 303 2
- D type diagnosis card: 446 300 732 0

4.4.2 PC diagnosis: used for vehicle leaving production line diagnosis
4.4.2.1 Functions
- Fault memory
- Make ABS parts operate. E.g.: ABS lamp, magnetic valve, etc.
- Measure sensor voltage, wheel speed, etc.
- Diagnose ECU parameters
- ABS system diagnosis
- Used as multimeter, measuring voltage, resistance, etc.

4.4.2.2 PC diagnosis mainly consists of the following parts:
- Laptop
- PC software: 446 301 620 0
- Diagnosis wire: 894 604 303 2
- Converter: 446 301 021 0

4.4.3 Flashing code diagnosis: a simple and practical diagnosis method normally used for maintenance service.
4.4.3.1 Basic terminology

Flashing code switch

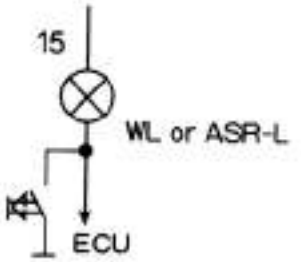

● Flashing code: A series flashing of ABS lamp indicates fault or state of the ABS system.
● Flashing code cycle: Twice flashing code with interval of half a second between 1 flashing code.
● Flashing code switch: A switch starting flashing code diagnosis function.
● Clearing: Procedure of clearing faults in ECU.
● Diagnosis: Procedure using flashing code to determine ABS system fault.
● Fault: ABS determined by ECU and stored in memory fails; the system fault may be physical fault or stored fault.
● Physical fault: Existed in ABS system at present, e.g.: left front wheel sensor loop failure. Physical fault must be repaired, otherwise, it cannot be cleared from the memory, and cannot display other faults any more.
● Stored fault: There are two kinds of stored fault:
a) Fault after repair has not been cleared from ECU yet.
b) A fault occurred before but no longer exists, e.g.: loosened wire contacts intermittently. As the stored fault is not the physical fault at present, it is not necessary to repair it before clearing it from the memory.
● System structure code: Digital code displayed in clearing mode; structure code used in general ABS system is as follows:

4S/3M	Flashing 3 times
4S/4M	Flashing 2 times
6S/4M	Flashing 4 times
6S/6M	Flashing 1time

● Diagnosis mode: Press the flashing code switch (grounding) and maintain for 1s, then release, ABS lamp will occur two groups of flashing code, ABS fault can be determined against flashing code.
● Clearing mode: Clear fault on ECU in clearing mode. Press the flashing code switch and maintain for 3s, then release. If the ABS lamp displays 8 times fast flashing, then the system structure code is flashed out, indicating the clearing is successful, ABS fault has been cleared from the memory. If the ABS lamp does not flash for 8 times, only the system structure code flashes, indicating the ABS system still exists physical fault, which must be repaired before clearing.

4.4.3.2 Flashing code diagnosis procedure

Mode	Procedure	System reaction	Operation
Diagnosis	First step: turn On ignition switch	Three kinds of possible reactions 1. ABS warning lamp is lit instantaneously, and then goes Off, indicating the system is OK.	There is no physical fault in ABS, and no action is required to take.
		2. ABS lamp is not lit, indicating the line failure or bulb damaged.	Check the line and bulb, and make necessary repair.
		3. ABS lamp is lit continuously, indicating there is one or more faults in the system.	Continue the flashing code diagnosis (second step)
	Second step: press the flashing switch and maintain for 1s	ABS warning lamp switch flashes two groups of codes	To determine the fault is physical fault or stored fault: Physical fault: the lamp will repeat to display one code. Stored fault: the lamp will display code of each stored fault, then goes Off, fault will be displayed only for one time.
	Third step: determine the flashing code according to the flashing times	First group figure: Flashing for 1 ~ 8 times, interval of (1.5s)	Turn Off the ignition switch, and determine the fault type against the flashing code
		Second group figure: Flashing for 1 ~ 6 times, interval of (4s)	
	Fourth step: correct and record fault	Physical fault	Carry out necessary correction. Repeat steps 1, 2, and 3 until the system is OK.
		Stored fault	Keep record for future reference. Note: the first displayed fault is the last stored fault of ECU.
Clearing	Fifth step: clear fault from memory, press the flashing code switch and maintain for at least 3s.	ABS lamp flashes for at least 8 times	All the faults are cleared successfully goes Off.
		8 times flashing not seen	Physical fault still exists, repeat the steps 1 ~ 5.

4.4.3.3 Flashing code checklist

First group fault flashing code		Second group fault flashing code	
Times	Fault part	Times	Fault part
1	Fault free	1	Fault free
2	ABS magnetic valve	1	Right front wheel
3	Big sensor clearance	2	Left front wheel
4	Sensor open circuit/short circuit	3	Right rear wheel
5	Sensor signal unstable	4	Left rear wheel
6	Gear ring damaged	5	Third axle right wheel
		6	Third axle left wheel
7	System function	1	Data interface
		2	ASR differential valve
		3	Third brake breaker
		4	ABS lamp
		5	ASR arrangement
		6	ASR proportional valve
8	ECU	1	Voltage ratio
		2	Voltage high
		3	Internal fault
		4	System arrangement fault
		5	Grounding

4.4.3.4 Flashing code fault diagnosis and handling

Flashing code	Checking	Testing and repair
2-1…2-6	Check ABS magnetic valve and the wire and the plug	Measure resistance
3-1…3-6	Check clearance between the sensor and the gear ring, check whether the wheel bearing is loosened or hub deflected	Adjust the clearance between the sensor and the gear ring, measure the sensor voltage
4-1…4-6	Check sensor and the wire and the plug	Measure resistance
5-1…5-6	Check fitting of the tyre and the gear ring	Check tyre dimension
6-1…6-6	Check whether the gear ring is damaged	
7-1	Check the data interface	According to wiring diagram
7-2	Check ASR valve and its wire and plug	Measure resistance
7-3	Check the third braking relay connection	According to wiring diagram
7-4	Check ABS warning lamp connection	
7-5	Check whether ASR valve arrangement is proper	
7-6	Check whether flashing code is correct, clear ECU memory	Flashing code diagnosis
8-1	Measure vehicle voltage and the voltage supplied to ECU (18 ~ 30V)	Measure voltage according to wiring diagram
8-2	Check vehicle voltage (18 ~ 30V), check whether flashing code has cleared correctly ECU memory	Measure voltage Flashing code diagnosis
8-3	Check correctness of flashing code and clear ECU memory	
8-4	Check correctness of flashing code and clear ECU memory, if the flashing code is not clear, it is necessary to replace ECU.	
8-5	Check ABS grounding	According to wiring diagram

4.4.4 Diagnose with portable diagnosis instrument
Diagnosis instrument: 446 300 410 0
Diagnosis wire: 894 604 303 2

4.4.4.1 Connection of diagnosis instrument
a) Insert the diagnosis wire with 9-pole plug into corresponding interface of the diagnosis instrument.
b) Connect another end of the diagnosis wire with the diagnosis interface of the vehicle side.
c) Turn On ignition switch.
d) The diagnosis instrument will display “888” immediately.
e) It will display “ABS” in about 1s.
f) Connection of the diagnosis instrument and ABS system succeeded.
g) Carry out necessary diagnosis operation.

4.4.4.2 Fault locating
a) After successful connection of the diagnosis instrument and the ABS system, press key “ERROR” for approx. 1s.
b) Release the key “ERROR”, the screen will display the fault with three groups of figures.
Position 1 position 2 position 3
Fault path fault type occurrence times
E.g., 411: sensor of wheel D, too big clearance, occurred for 1 time.
c) First to display the current faults identified by ECU, after the display, “old” will occur, at this time, press and release the key “ERROR”, and then stored faults are display.
d) After all faults are displayed, “ABS” will be displayed.

4.4.4.3 Fault cancellation
Precondition: no current faults exist
a) Press (more than 5s) and release the key “CLEAR”.
b) The screen will display “Clr”.
c) Then the screen will display “ABS”.
d) Turn Off ignition switch, then turn On ignition switch again.
e) All the stored faults are cancelled.

4.4.4.4 System display
a) Press and release the key “SYSTEM”.
b) The screen will display ABS system type. E.g.: “4-3” indicates 4S/3M ABS system, e.g.: “4-4”, indicates 4S/4M ABS system.

4.4.4.5 System formatting
a) Press and release the key “SYSTEM”.
b) The screen will display ABS system type. E.g.: “4-3”.
c) Press the key “SYSTEM” for over 2s, the display is cancelled and displays new system within short time. The formatting succeeds. If the system fails in formatting due to some reasons, after pressing the key “SYSTEM” for the second time, the screen displays “—” immediately.

4.4.4.6 Functional testing

Precondition: no current faults exist

a) Press and release the key “SYSTE”, the screen will display ABS system type.

b) Press the key “CLEAR” for over 2s. After that, the screen will display “SYS”.

c) Step on the throttle, if the engine keeps idle running, indicating ASR engine control works. The screen will display the time in figure (1, 2-10). If ASR, screen will display“—”.

d) Press again the key “CLEAR” and for more than 0.5s, retarder will become invalid for 5s, the screen displays “005…000”. If there is no retarder, the screen will display “—”.

e) To terminate the testing, just press any one of the keys.

4.4.4.7 System error testing

a) After testing retarder speed control, the screen displays “SYS” without pressing key but turns every wheel. The wheel speed is higher than 4KM/H.

b) The screen will display the current wheel speed, e.g. wheel A speed is 5km/h, the screen displays “A05”. If wheel A is turned, but the screen displays speed of wheel B or speed of other wheels, it indicates wiring mistake of the sensor.

c) After the wheel being turned stops, the corresponding ABS magnetic valve will operate, whether the wiring is correct can be judged by the magnetic valve operating sound.

d) After C wheel and E wheel are turned, the pulse program starts, which can measure ASR differential valve.

5. Use of ABS

● Precautions for use of ABS:

● It is strictly forbidden to rinse ECU with water.

● Do not use multimeter to measure ECU.

● When charging battery with external high voltage, disconnect the ABS.

● When assembling/disassembling each part, turn off power supply.

● When carrying out welding operation on vehicle, disconnect the ABS.

● Check from time to time for whether the generator voltage is stable.

● Replace timely the ABS indicator lamp in case of damage.

● Never change at will the fuse capacity.

ABS only works when the wheel is to block due to emergency brake. In simpler words, when ABS is working, it works just like the driver’s fast and frequent “step on brake”; but the driver’s “step on brake” frequency can never be compared with that of ABS, ABS has to make 3 ~ 5 changes within 1s.

● Truck installed with ABS can choose to install a ABS switch, under normal rode condition, the ABS can be turned off, and turn on the ABS when running on wet and slide road.

● When the vehicle installed with ABS making emergency brake if emergency case is encountered, step on the clutch immediately first, then step on rapidly the foot brake, at the same time, the steering wheel can still be turned, to make the vehicle away from the roadblock.

Caution ⚠

If ABS lamp is lit during running of vehicle, it indicates ABS system is fault, but still can run the vehicle safely, because the conventional brake of the wheel having ABS fault still works, but such kind of vehicle

must go as early as possible to the Hualing Automobile Service Station for diagnosis, repair, so as to make the ABS system function become normal.

Appendix 1: ABS-D system part list

No.	Product name	No.
1	ECU (D-Basic)	446 004 310 0
2	Magnetic valve	472 195 018 0
3	Extension wire of magnetic valve	449 513 XXX 0
4	Sensor	441 032 809 0
5	Extension wire of sensor	449 711 XXX 0
6	Sensor bushing	899 759 815 4
7	Plug body (14PIN)	894 110 110 2
8	Plug body (18PIN)	894 110 091 4
9	Plug	894 070 829 4
10	Plug (gold plated)	894 070 831 4
11	Bundling tie	894 326 012 4
12	Grease	830 502 068 4

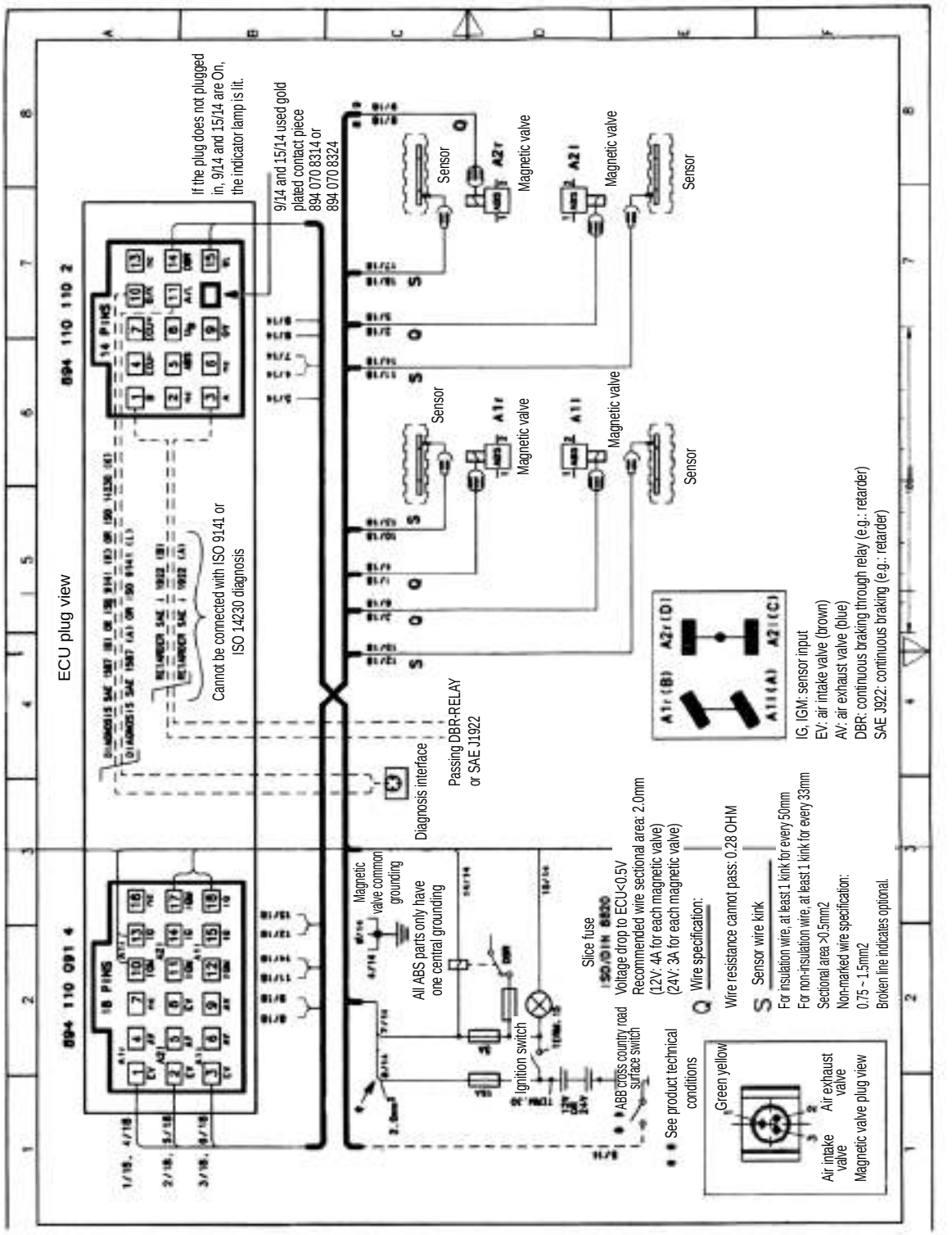

Vehicle Parking

When parking with the tractor and the trailer coupled, in addition to applying hand braking of the tractor, hand braking of the trailer must be applied as well, and insert wood block (option) under the wheel.

Usage of Air Conditioner

Air Conditioner

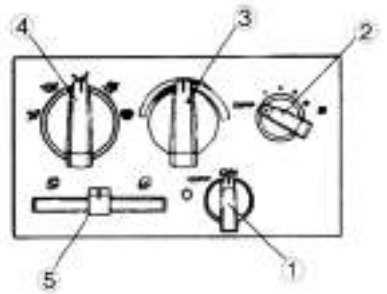

03990

►Control panel

① Air conditioning switch
② Fan switch
③ Temperature adjusting knob
④ Outlet switching knob
⑤ Switching handle for internal and external air exchange

04482

● Air conditioning switch

When it is required to start the air conditioning device to cool down the air inside of the vehicle, the air conditioning switch shall be turned to ON position. When it is required to stop the air conditioner, turn the switch to OFF position.

03611

● Fan switch

It can adjust the wind volume in four ranges.

① OFF:
② .:Mild wind
③ .:Weak wind
④ •:Medium wind
⑤ •:Strong wind


01446

● Temperature adjusting knob
It can adjust the wind temperature. Turn the knob to clockwise direction, the temperature goes up. Turn the knob to counterclockwise direction, the temperature goes down.

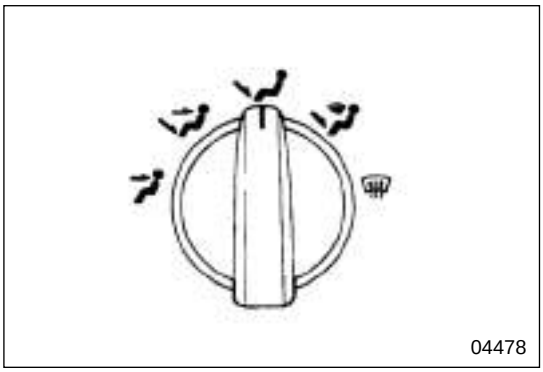

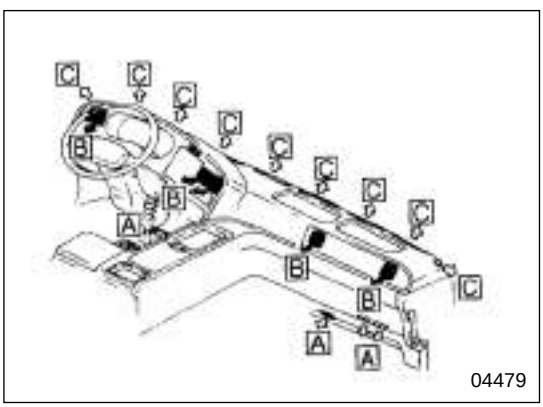

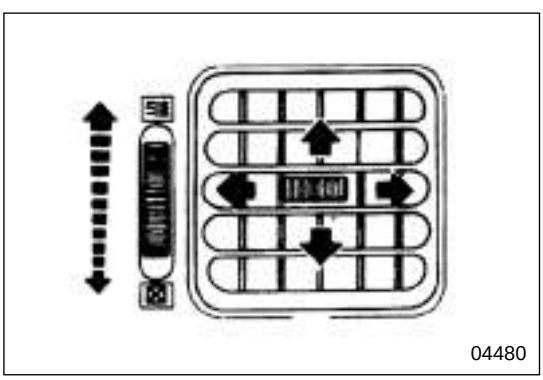

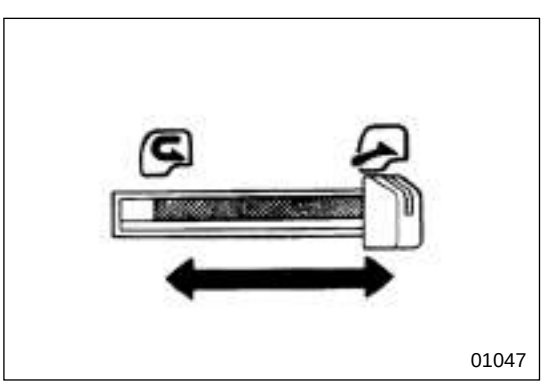

● Outlet switching knob

Knob position	Outlet	Purpose
	B	Cold/warm wind: blow to upper body.
	B+A	Double wind outlet: blow to feet and upper body at the same time.
	A	Cold/warm wind: blow to feet
	A+C	Defrost/wind out:cold/ warm wind blow to feet, and it is blow out to the windscreen and door windows through de-froster.
	C	Defrost: cold/warm wind blow out to the wind-screen and door windows through defroster.

When at B position, the wind volume can be adjusted with air outlet handle. Apart from the outlet on the right side of the driver's seat, all the other outlets have the dial for wind volume adjustment. If this dial is turn completely to the ⊠ symbol, then the outlet can be closed.

● Switching handle for internal and external air exchange

Circulate the indoor air. To be used when it is needed to warm up inside of the vehicle quickly or there is much dust or smoke in the outside air.

Introduce in the outdoor air. Normally to be used on this position.

Note

In cold weather, if the handle is put in position for long time, the door window will be unclear.

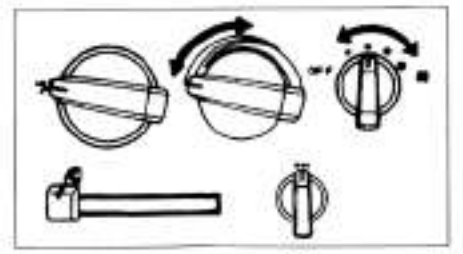

03991

► Cold air

Warning ⚠

Do not leave a child in the vehicle alone, when the air conditioning device is running. In case the air conditioning device stopped, the child left in the vehicle will be endangered by the rising temperature.

The cold wind is blow to the upper body. Turn the air conditioning switch to ON position, and adjust to the most comfortable temperature with the temperature adjusting knob.

Note

In case the air conditioner is used for long time, the air switching handle shall be put in position for air exchange now and then.

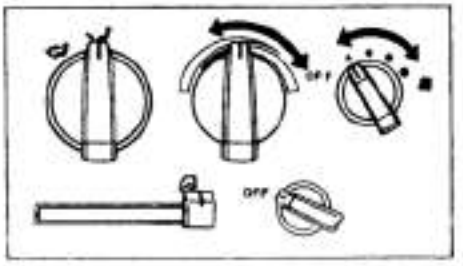

05218

► Warm air

- The warm wind is blow out to feet.
- When it is needed to warm up inside of the vehicle quickly or there is much dust or smoke in the outside air, the switching handle for internal and external air exchange shall be put in position.
- When the door windows are unclear, turn the outlet switching knob to position.

Note

- The heater is to warm up the air by utilizing the heat from the engine. Therefore, when the engine temperature is still very low, even the temperature control knob is put at the position of the highest temperature, it still cannot warm up the air.
- In case the heater is to be used during the warming up to the engine or when the vehicle is in parking status, the cold start-up switch shall be turned to ON position, so as to warm up the indoor air quickly.

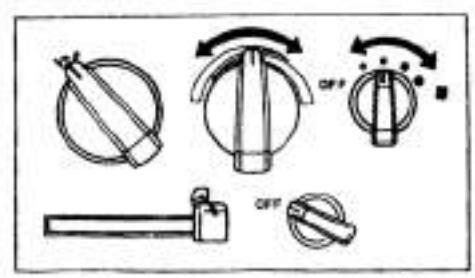

05219

► Dual-direction(head cool feet warm type)warm air

- Blow warm wind to the feet, while warm wind with relatively lower temperature is blown to the upper body.

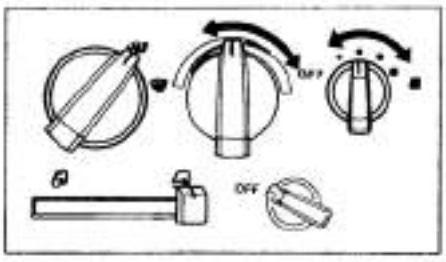

05220

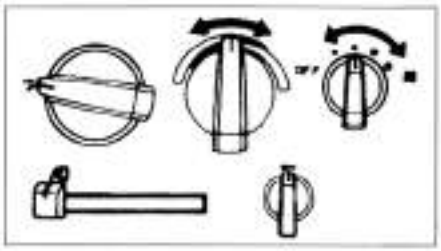

03992

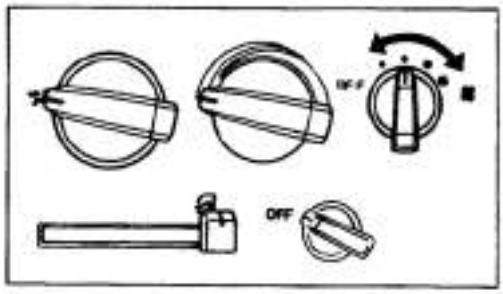

05221

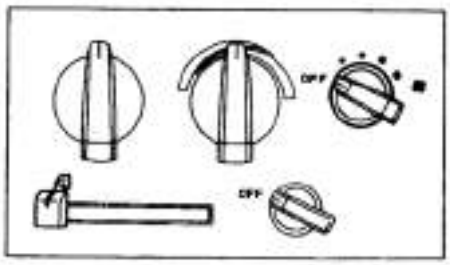

05222

● The temperature adjusting knob shall be put in the middle position. Turning the knob to the left or right side will alter the temperature of the two types of warm wind.

► Defrost

● Blow warm wind to the windscreen and door windows. In case it is needed to remove the frost quickly, the fan switch shall be put in the position of the maximum wind volume.

● Turn the outlet switching knob to position, it can warm the feet at the same time of defrost for the windscreen and door windows.

● In case it is required to melt the snow and ice outside of the wind screen, the switching handle for internal and external air exchange shall be put on position.

► Remove humidity

The air conditioning device first cools down the air to remove the humidity, and then heat up to blow warm air from the outlets. The dehumidifier can be use when there is especially high humidity.

► Air exchange

Blow outdoor air to the upper body.

► Stop

● When the heater is stopped, the fan switch shall be put in OFF position.

● Turn the switching handle for internal and external air exchange to position, it can prevent the dust from entering into the vehicle.

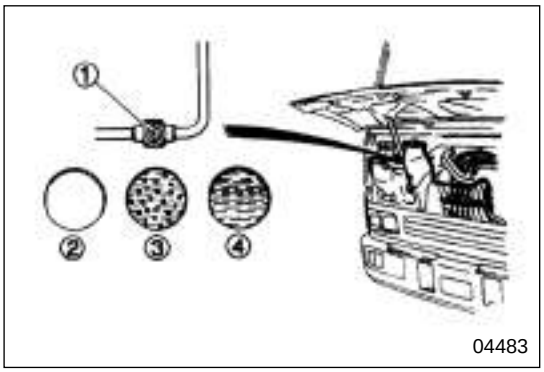

► Check the volume of the coolant

Insufficient coolant will lower the cooling efficiency. The volume of the coolant shall be checked frequently. For this purpose, when the air conditioner is running, check the coolant level from the inspection window (coolant level inspection window) on the storage tank. It is normal when there is no air bubble observed from the window glass. In case there are air bubbles seen from the door windows, it means the coolant is not sufficient, please go the Automobile Service Station for re-filling of the coolant.

① Observe the window glass.
② No coolant
③ Insufficient coolant
④ Proper volume of the coolant.

Caution ⚠

● In order to protect the environment, this air conditioning device is using the coolant. HFC-134a, which will not cause damage to the ozonosphere. Since its filling method is different from the original one, therefore please contact Hualing Automobile Service Center before filling the coolant.

● Filling of any coolant other than HFC-134a will become the cause of air conditioner fault. Therefore only HFC-134a can be used as the coolant.

Note

Do not discharge the coolant gas into the atmosphere.

When repairing or scrapping the vehicle, please contact Hualing Service Station, in order to recover the coolant.

► Clean the air filter

The air filter shall be cleaned every 6 months. Too many dust accumulated on the air filter will become the cause of fan motor fault.

Interior Appliances

Vehicle Sound System
Operation instructions
MP3 Operation Instructions

Welcome

Thank you for choosing to use this product. In order to make the best use of the functions of this product fully as well as to safeguard your rights and interests, please read this Operation Instructions carefully.

Precautions

- This product is suitable for 24V DC minus earth electrical system, with load impedance of 8Q.
- To prevent short circuit, prior to installation, it is necessary to disconnect the battery wiring terminal.
- If fuse has to be replaced, the fuse of the same size must be used; otherwise it might possibly damage this product.
- Do not disassemble this product.
- Do not let any metal or foreign matter enter this product so as to avoid breakdown and accident of this product.
- When the vehicle is parked under the sunlight and the temperature inside the vehicle has risen obviously, it is the best not to use this product before the temperature cools down.
- If there is any issue unclear, please contact the after-sale service center of this company by calling this telephone number: 0755-83346006.

Table of Contents

Front panel

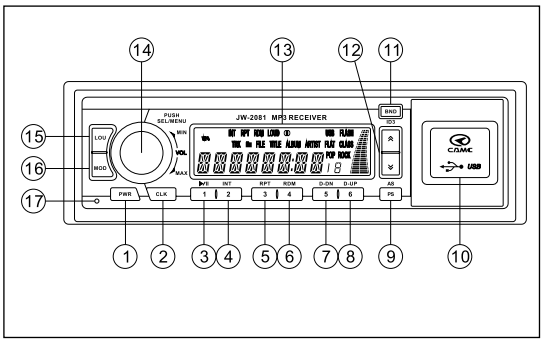

1. Power switch
2. Clock display
3. Preset radio station 1//Play and Pause
4. Preset radio station 2/Scan and Play
5. Preset radio station 3/Repeated Play
6. Preset radio station 4/Randomly Play
7. Preset radio station 5/MP3 skips backward for 10 songs
8. Preset radio station 6/MP3 skips forward for 10 songs
9. Auto/Manual preset the radio station
10. USB port
11. Wave band selection / ID 3 contents display
12. Forward (backward) tuning/1 previous (next) song
13. LCD display area
14. Volume adjustment/Function menu selection
15. Loudness control
16. Mode selection
17. Reset button

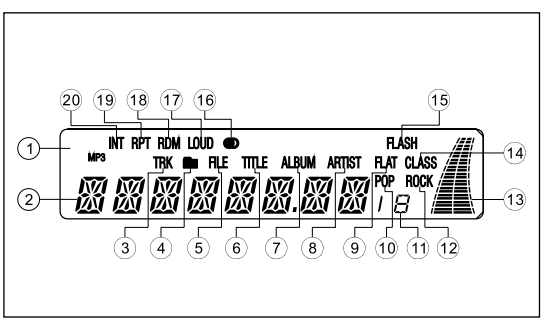

1. Dynamic indication of U disk playing
2. Main display area
3. Track indicator
4. File folder name indication
5. File name indication
6. Song name indication
7. Special edition indication
8. Singer’s names indication
9. FLAT sound effect indication
10. POP sound effect indication
11. Song No./Preset/Radio station No. indication
12. ROCK sound effect indication
13. Dynamic level indication
14. CLASS sound effect indication
15. U disk indication
16. FM stereo indication
17. Loudness indication
18. Random playing indication
19. Repeated playing indication
20. Scan playing indication

ON/OFF

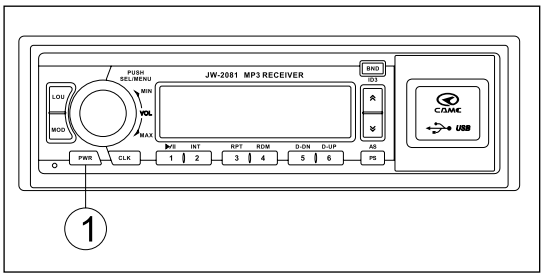

1. Press PWR button to turn on.
2. When ACC is on, press any button to turn on.
3. Press and hold PWR button (for more than 1s) to turn off.

Clock Setting

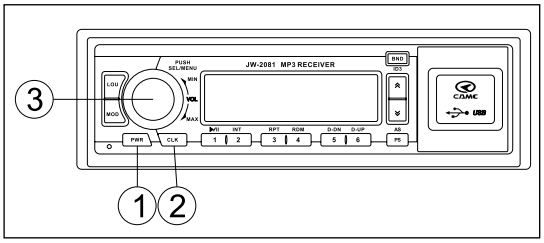

● When power is on, time indication begins from “0:00”.

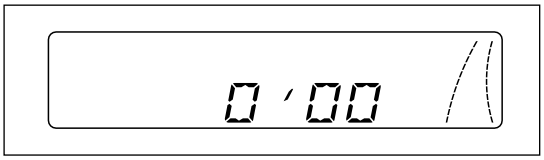

● The clock is of 24h system.

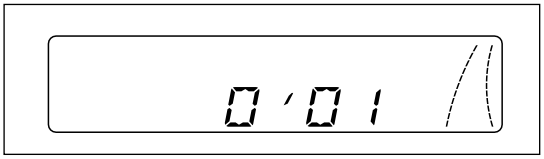

1. Short press CLK button, time is displayed on LCD.

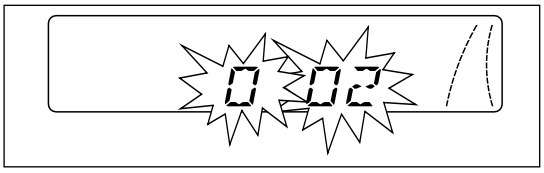

2
. Press and hold CLK button (for more than 1s), The “Hour” and “Minute” on LCD jump forward.

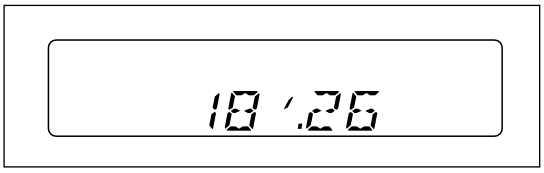

3. Turn the knob leftward to adjust the “Minute”; and turn the knob rightward to adjust the “Hour”.

4. If no operation is made after setting, it returns to the original work status in 5s.
5. Time displays when this product is working: Press CLK button to display time, press the button once again to return to the previous display. Time displays for 5s the longest.
6. When the power is off, LCD back light goes off; but the display screen still displays the time.

Receiving Operation

- FM1, FM2, and FM3 have the same frequency range (87.5-108MHz).
- MW1and MW2 have the same frequency range (522-1620OKHz).
- If turn off the radio in receiving mode and then press PWR to turn on, it can still receive the same frequency as that before turning off.
- When receiving FM stereo radio and the signal is good, “④” indicator is lit.

►Auto searching radio station

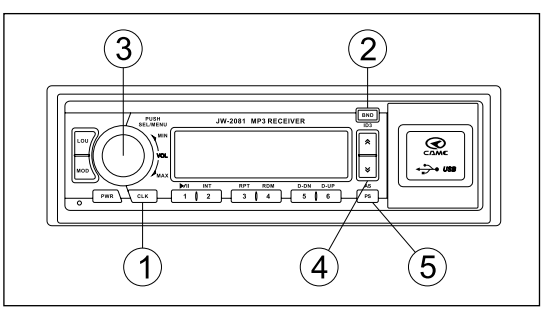

1. Press BND button to select the desired band of FM1, FM2, FM3, MW1 or MW2.
- This product provides two modes of auto radio station seeking functions of SEEK1 and SEEK2:
2. Press and hold the button (for more than 1s) to enter the selection mode; press it again to select SEEK 1 from the DSP OFF/BEEP ON/SEEK 1 cycle.

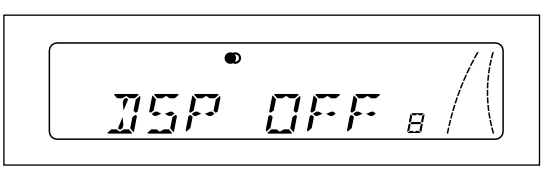

3. Turn the knob to select SEEK 1 or SEEK 2.

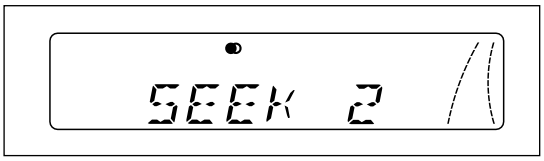

4. Under SEEK 1 mode

Press and hold the ⌃ button (⌄ button) to scan the radio station; frequency increases or decreases; it stops automatically when it has sought the radio station.

5. Under SEEK 2 mode

Press and hold the ⌃ button (⌄ button) for more than 0.5s to seek the radio station; frequency increases or decreases automatically, and it stops automatically when it has sought the radio station. When the button is held, no matter if it has sought the radio station or not, the seeking will continue, and the previous seeking mode will be resumed until the button is released from holding; then if the radio station has been sought, it will stop automatically.

6. If the ⌃ button (⌄ button) is operated during seeking, the auto seeking will stop.

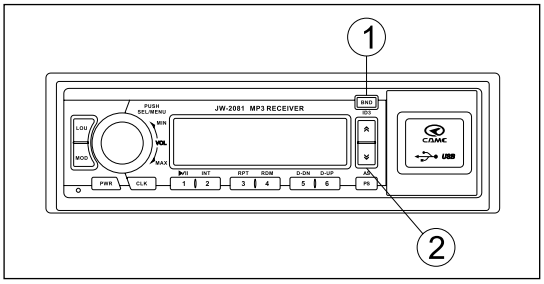

►Manually seeking radio station

1. Press BND button to select the desired band of FM1, FM2, FM3, MW1 or MW2.

2. When the button (film button) is pressed shortly, the frequency will increase or decrease a step size (FM: 0.1MHz; AM: 9 KHz).

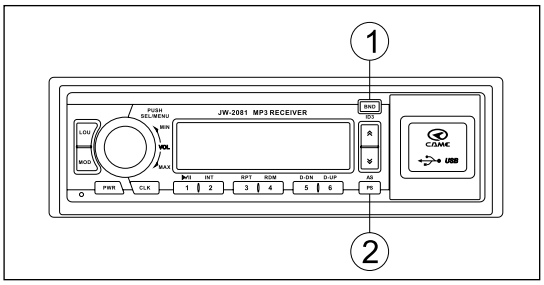

►Automatically preset radio stations

1. Press BND button to select the desired band of FM1, FM2, FM3, MW1 or MW2.

2. Press and hold PS/AS (more than 2s) to preset radio automatically and start seeking from the low frequency of the current wave band; in this process, the display displays frequency hopping, the charactr "8"

flashes; short press the PS/AS button again, then the automatic preset radio station stops.

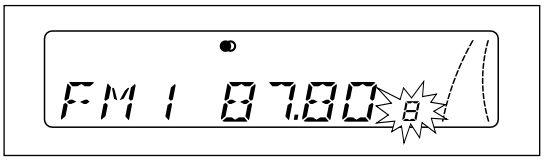

● Six radio stations can be preset on each wave band; the band with strong signal will be preset

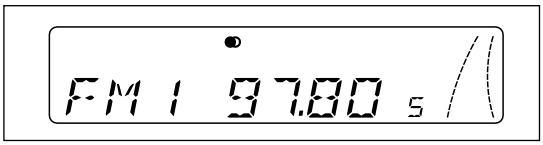

with priority.

● When the automatic presetting completes, it will scan to play all the preset stations for one time, then to play the radio corresponding to button" 1".

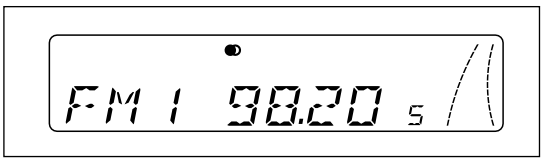

● When making automatic presetting of the same wave band for the 2nd time, the previously preset radio stations will be covered.

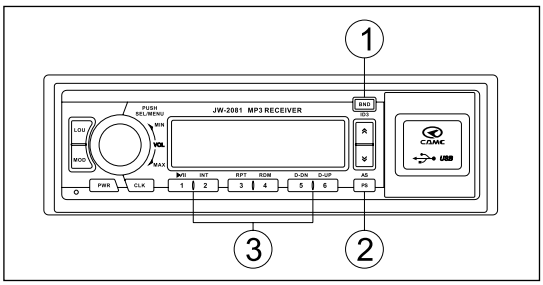

►Manually preset radio stations

1. Press BND button to select the desired band of FM1, FM2, FM3, MW1 or MW2.
2. Tune to the radio station your desire to preset by pressing ⌃ button (⌄ button).
3. If you press any of the 1-6 buttons for more than 2s, the current radio station will be preset to the corresponding button.

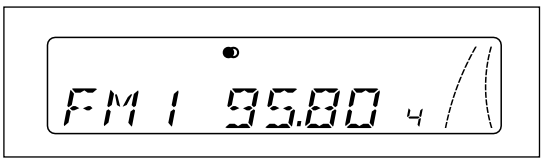

● Repeat the above steps, each wave band of FM1, FM2, FM3, MW1 or MW2 can be preset for 6 radio stations.

● If there are already preset radio stations on the button, when presetting a new radio station, the originally preset radio stations will be covered.

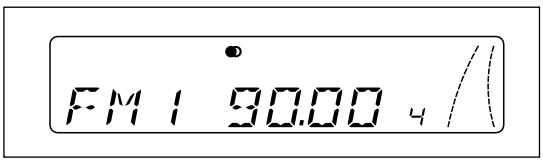

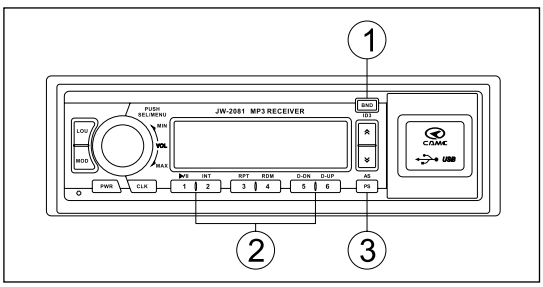

►Tuned to the preset radio stations

1. Press BND button to select the desired band of FM1, FM2, FM3, MW1 or MW2.
2. Press the desired Preset Radio button 16, and then it will play the corresponding radio station; its wave band and frequency and the radio station No. will be displayed on the screen.

● If it is necessary to check the preset radio stations, press PS/AS,the preset radio stations will play for 5s in turn; those stations that have no signal will be skipped over quickly. Press PS/AS again to stop checking.

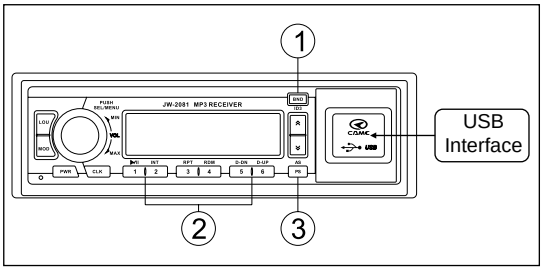

U Disk Playing

1. Press PWR button to turn on the player.
2. Insert the special U disk into USB port; or insert the common U disk or MP3 player into the USB interface through special patch cord.

3. It will display the total number of the MP3 songs in approx. 10s.

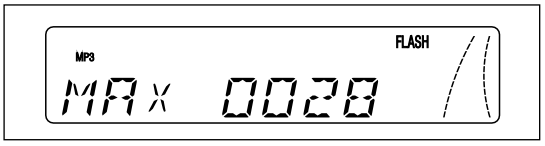

4. If U disk has already been connected to the player, press MOD button to select the desired type of playing.
5. The screen will display in cycle the song No., playing time and the various information that the MP3 file contains, such as, name of the file folder, name of the song, name of the singer, etc.

● How much information and the variety of the information it will display all depends on the MP3 itself.

● It does not support the display of Chinese names.

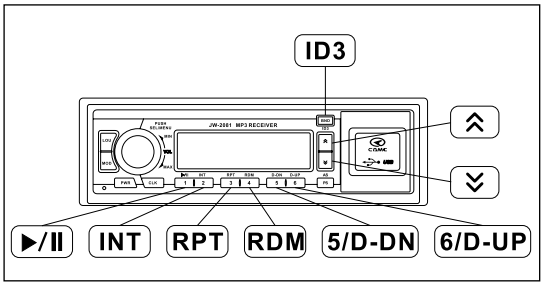

►Press the following buttons to play MP3:

Button	Function
▶/II	● Short press this button to pause/start playing. ● Press and hold this button (for more than 1s) to change to play the first song.
⌃	● Short press this button to select the next song. ● Press and hold the button to make fast seeking of the desired part within the song; release the button when the desired part is found, and it plays starting from that part. When the seeking goes beyond the range, it plays the next song.
⌄	● Short press this button to select the previous song. ● Press and hold the button to make fast seeking of the desired part within the song; release the button when the desired part is found, and it plays starting from that part. When the seeking goes beyond the range, it replays the current song.
5/D-DN	● To skip 10 songs backward and play.
6/D-UP	● To skip 10 songs forward and play.
ID3	● To display information on MP3 file: names of the file folder, files, songs, special edition and singer.

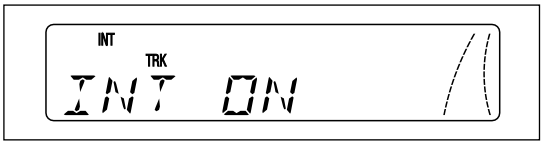

►To scan and play

● Press 2/INT button to play, and "INT" indicator on the screen is lit; it starts to play the contents of the first 10 seconds of all the songs in the sequence starting from the next song. Press 2/INT button again to cancel the scan playing.

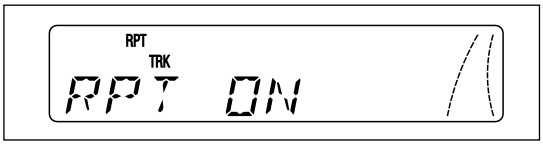

►To replay the same song

● Press 3/RPT button to play, and "RPT" indicator on the screen is lit, it starts to play the current song repeatedly. Press 3/RPT button again to cancel the repeated playing.

►To play randomly

● Press 4/RDM button to play, and "RDM" indicator on the screen is lit, it starts to play the songs on the disc randomly. Press 4/RDM button again to cancel the random playing.

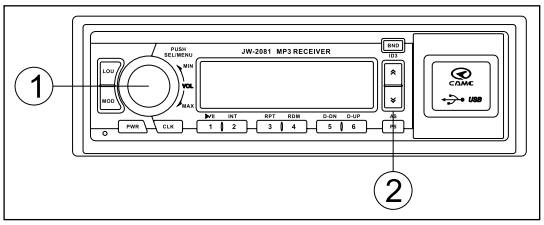

►To play by selecting the song No.

● Under MP3 mode, the user may select to play songs according to the song Nos.

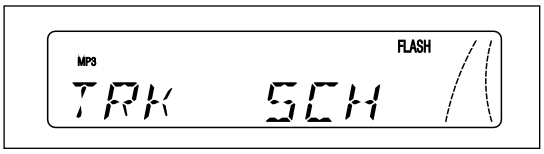

1. Press PS/AS and the screen displays “TRK SCH”.

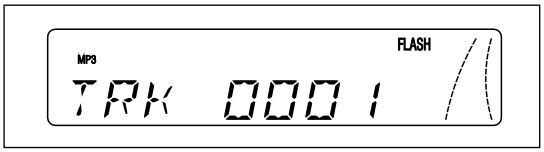

2. Press the knob to display song Nos. “TRK 0001”, turn the knob to select the desired songs.

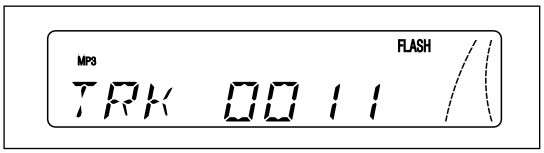

3. Press the knob again to display “TRK 000X”, then the tens place is flashing; turn the knob to select the desired song No. (The ones place remains unchanged).

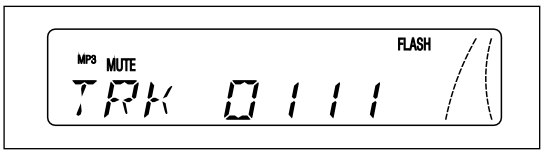

4. Press the knob again to display “TRK 000X”, the hundreds place starts flashing; turn the knob to select the desired song No. (The tens place and the ones place remain unchanged).

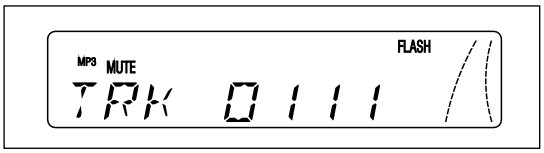

5. Press the knob again to display “TRK OZYX”, the four-digit starts flashing; turn the knob to select the desired song No. (The hundreds place, tens place and ones place remain unchanged).

6. Press the knob again, and it starts to play the selected songs.

● If the selected digits exceed the number of the songs on the medium, the last song on the medium will be displayed on the screen.

● Before completion of the entire setting process, MP3 remains in its previous play mode.

● If no operation is made within 10s at each step, it exits the setting mode automatically.

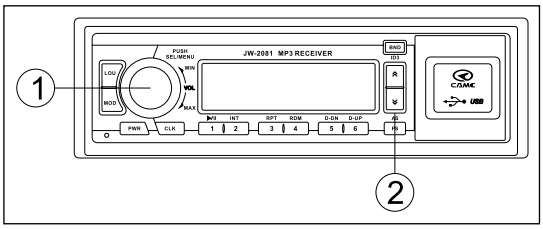

►To select to play songs within a file folder

►The file folder and file names in Chinese cannot be displayed.

● Under MP3 play mode, the user may select to play songs within the file folder.

1. Press PS/AS and select FILE SCH from TRK SCH/FILE SCH/CHAR SCH/MP3 001 in cycle; then the screen displays “FILE SCH”.

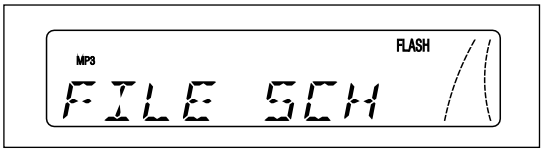

2. Press the knob to enter the file folder selection mode; the screen displays the name of the first file folder.

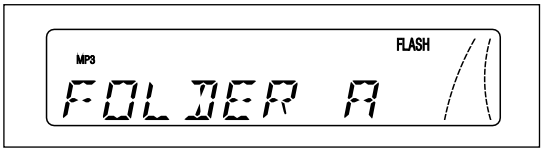

3. Select the desired file folder by turning the knob.

● If the file folder has multi-tiers, it reads the first tier first, then the second tier. It supports three-tiers for maximum.

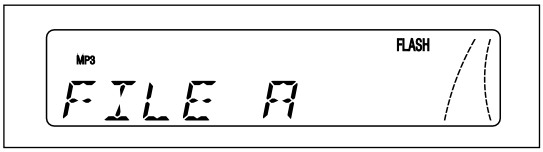

4. Press the knob again to enter the selection mode. Then the screen displays the first song of the contents.

5. Select the desired song by turning the knob.

6. Press the knob again to start playing the selected song.

● Before completion of the entire setting process, MP3 remains in the previous play mode.

● If no operation is made within 10s at each step, it exits the setting mode automatically.

►Select to play according to the file name

● Under MP3 play mode, user may select to play songs according to the file name.

1. Press PS/AS, and select CHARSCH from TRK SCH/FILE SCH/CHAR SCH/MP3 001 cycle; the screen will display “CHAR SCH”.

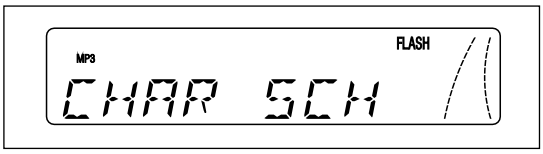

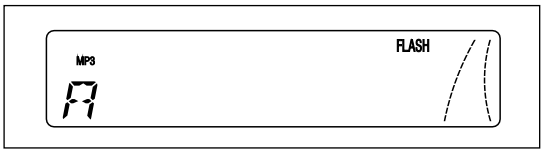

2. Press the knob to enter the character selection mode; the screen will display the first character for selection.
3. Turn the knob to select the desired character.
4. Press and hold the knob (for more than 0.5s) to determine the selected character. If there is no desirable file name, the current play mode will not be changed.
5. Press the knob again to play the selected song.
● The characters available for selection are: A~z, O~9, * and _.

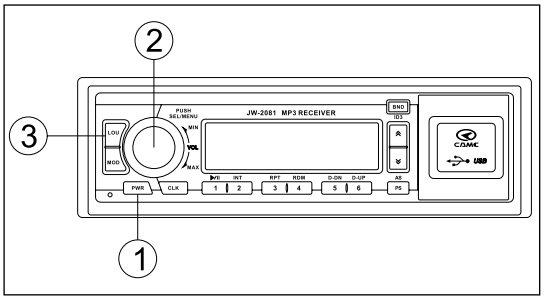

Sound Adjustment

1. Press PWR button to turn on.
2. Press the knob to select the desired item from VOL/BAS/TRE/BAL cycle.
3. Turn the knob to adjust each item according to the screen display.

Item	VOL+	VOL-
VOL	To increase volume	To decrease volume
BAS	To increase bass volume	To decrease bass volume
TRE	To increase treble volume	To decrease treble volume
BAL	To decrease volume of left loudspeaker	To decrease volume of right loudspeaker

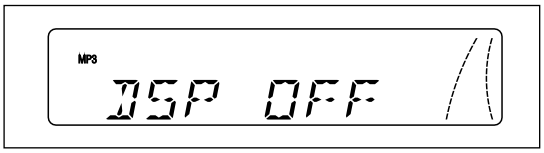

● When the knob is not pressed, its function is for sound adjustment.

►Setting of sound effect

● This player has four sound effect modes to be selected: POP/ ROCK/CLASSIC/FLAT.
1. Press and hold the knob in cycle (for more than 1s) to enter the selection mode; select DSP OFF from DSP OFF/BEEP ON/SEEK 1 cycle.

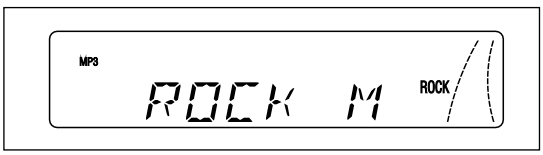

2. Press the knob to select the desired sound effect from DSP OFF/POP/ROCK/CLASSIC/FLAT cycle.

● It is in DSP OFF mode when the player is turned on, that is, the sound effect is off.

►Loudness control

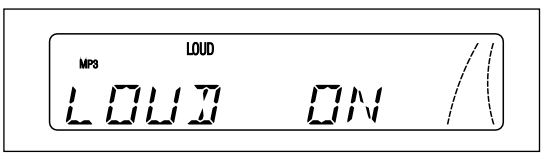

● Press LOU button to increase the bass and treble volume (particularly when the volume is low), the screen displays “LOUD ON”; press the button again to turn off the loudness, the screen displays “LOUD OFF”.

►Prompting sound for turning on and off the operation

● Under the default condition, when the button operation works, it gives off a sound; the way of turning off is: the loudspeaker will gives off a “Beep” sound.

1. Press and hold the knob (for more than 1s) to select BEEP ON from DSP OFF/BEEP ON cycle.

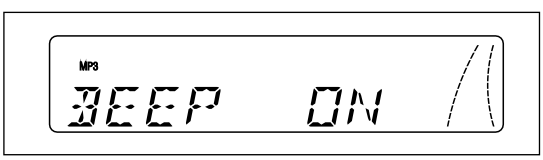

2. Press the knob to select BEEP OFF from BEEP OFF/BEEP ON cycle, which is to turn off “Beep” sound

.

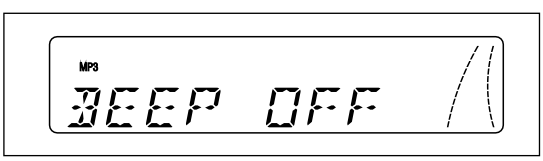

Maintenance

►Cleaning the front panel

● When the front panel gets dirty, wipe its surface with soft dry cloth.

● It is forbidden to use solution like benzene or spirit.

Troubleshooting

If operation does not work well or buttons are out of control, a pointed article can be used to press the Reset button to make resetting operation.

Caution ⚠

When pressing this button, the product will return to its initialization mode; so you need to reset the player again.

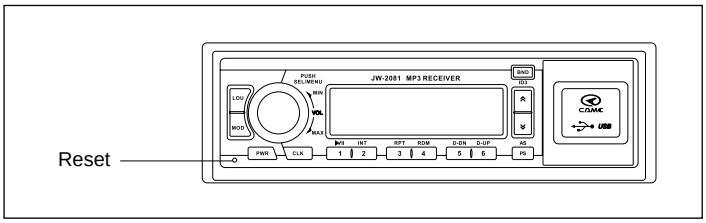

Trouble	Causes	Actions
No sound after it is turned on	1: Volume control is turned at the lowest 2: Power cord is not connected properly	1: Adjust the volume control to high 2: Check if +24V and grounding is connected properly
No power	1: The vehicle's ignition switch is turned off 2: The protective tube is burnt out	1: Switch the ignition device to position "ON" or ACC 2: Replace it with a protective tube of the same size
Radio does not have any signal	The antenna cable is not connected properly	Insert the antenna plug into the unit's antenna socket tightly
Radio station cannot be turned off when using automatic tuning	Signal too weak	Select the radio stations by manual tuning

The Company reserves the right to modify the product without having to notify users in advance.

CD Sound System

In order to make the best use of the functions of CD sound system, please read this Operation Instructions carefully.

Precautions

● This CD product is suitable only for 24V DC minus earth electrical system.

● To prevent short circuit, it is necessary to disconnect the battery wiring terminal before installation.

● If the fuse has to be replaced, the fuse of the same size must be used, otherwise it might possibly damage this product.

● Do not disassemble this product; the laser from the CD core optical head might harm the eyes.

● Do not let any metal or foreign matter enter this product in order to avoid breakdown and accident of this product.

● When the vehicle is parked under the sunlight and the temperature inside the vehicle has risen obviously, it is the best not to use this product before the temperature cools down.

● When installing this product, the body of the player cannot be tilted more than 30°.

► Precautions for using this CD product

● This product is designed to use the discs that have the identification labels as indicated in the following figure; discs with other kinds of identification labels might not be normally played.

● It can play CD-R and CD-RW discs. Because of the material quality and burning factors of CD-R and CD-RW discs, CD-R and CD-RW discs might have different effect when playing.

● If defect or contaminated disc is inserted into the device to play, the sound will pause during playing.

● Use fingers to hold the inner and outer edge of the disc in handling the disc.

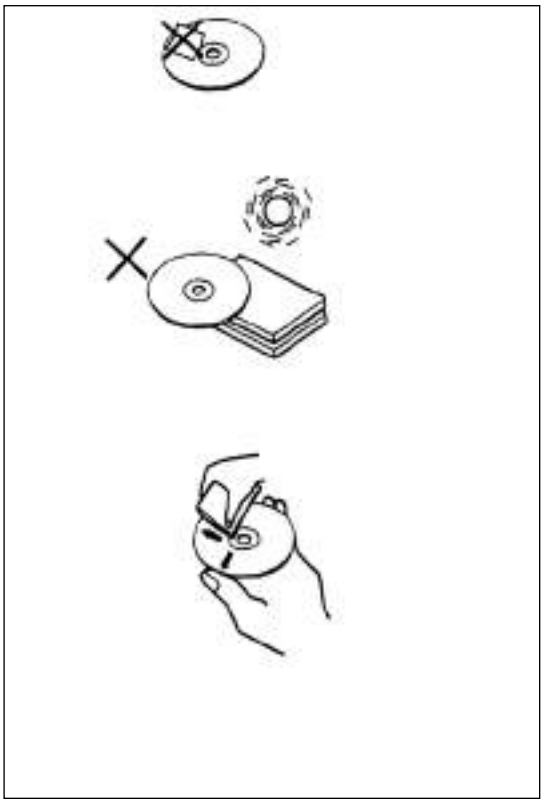

● Do not touch the side of the disc without any label.
● Do not stick any paper or tape on the disc surface.

● Do not expose discs to direct sunlight or to high humid or overheat conditions.

● Clean the disc before playing it in the way of wiping it from the center to the outer edge with washing cloth.
● It is forbidden to use any chemicals like disc cleaning spray, anti-static spray agent or liquid, benzene or amyl acetate to clean the disc. These chemicals will damage permanently the disc plastic surface.
● If the disc is not to use for a long time, take it out of the layer and put it in the plastic case. In this way it can avoid to be exposed to dust condition.
● This player cannot play small CD of 3in (8cm); do not use the adapter because it might cause trouble.
Do not play irregular shaped discs in the player (such as heart shaped or octagonal discs), which may cause trouble.

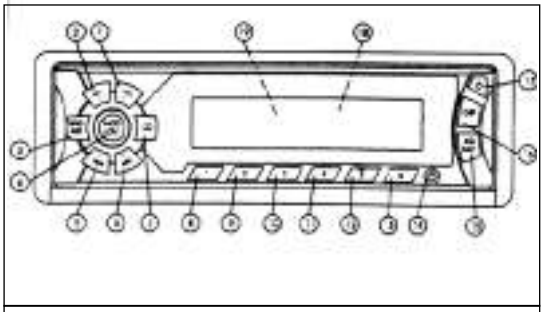

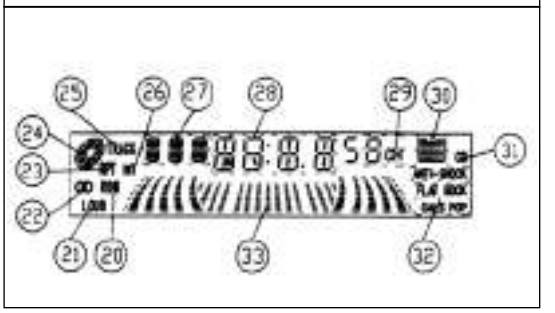

► Front panel

► Display window

1. VOL+ sound adjustment button
2. VOL- sound adjustment button
3. BND/AST wave band/ automatic storage button
4. MOD/LOU item/loudness button
5. |◄◄Backward tuning/backward jumping/hour setting button
6. ►►|Forward tuning/forward jumping/minute setting button
7. CD play/pause button
8.1 Preset radio station button
9.2 INT preset radio station/searching button

10.3 RPT preset radio station/repeat button
11.4 RDM preset radio station/ random button
12.5 EPS preset radio station/ESP button
13.6 Preset radio station button
14. ⏻ Power button
15. EQ/MUTE equal/mute button
16. DSP clock switchover button
17. ⌂ Front panel turndown button
18. ⏏ Disc out button (on host)
19. Disc holder mirror (on host)
20. RDM random play indicator
21. LOUD loudness indicator
22. ⊂⊃ Stereo indicator
23. RPT repeat indicator
24. Disk indicator
25. TRACK track indicator
26. INT preview
27. Names of songs on CD /wave band display area
28. Main display area
29. Preset No. indicator
30. Electronic shock resistance indicator
31. CD indicator
32. EQ indication area
33. Dynamic level indicator

► To take off and replace the front panel

When you leave the vehicle and no person is inside, you may take off the front panel and put it in the supplied portable box and bring it with you.

● Steps to take off the panel

1. Press ⏻ to turn off the power.
2. Press ⌂ button and the front panel falls down automatically.

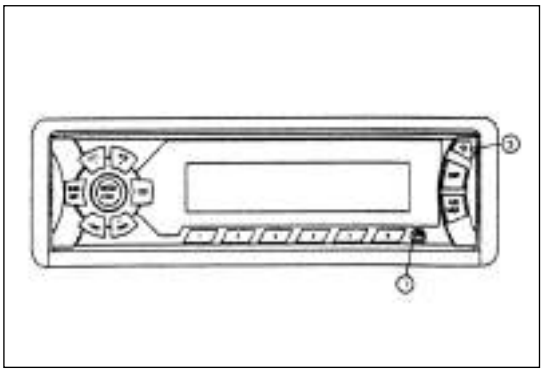

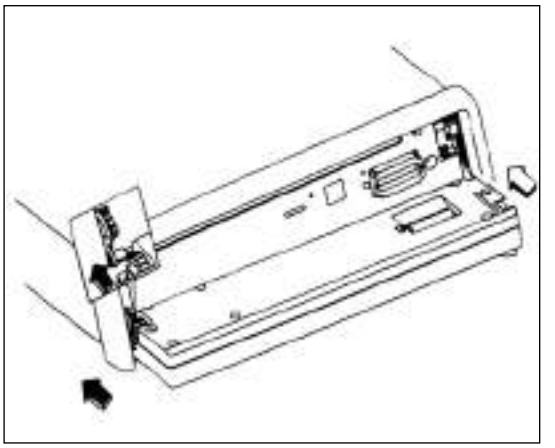

3. Pull out the left side of the panel, then pull out the right side of the panel, and take it off the device; and take care not to let the front panel fall down.

● Do not touch the connector at rear side of the front panel, if the connector gets dirty, it will have poor connection and lead to trouble.

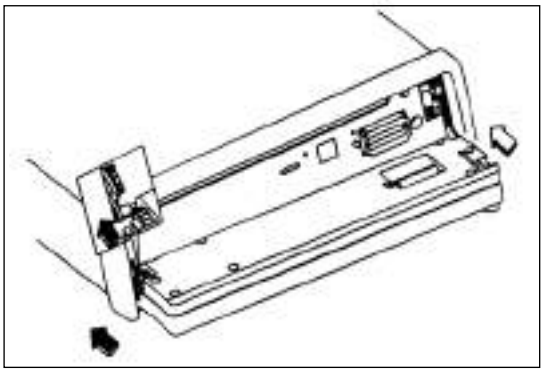

► To replace the front panel

Align the left side of the panel with the stopper, and then push the right side of the panel into the device until a click sound is heard.

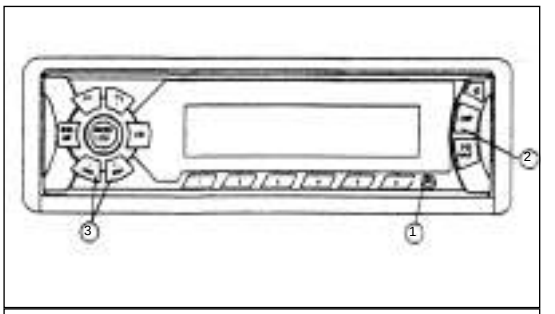

► Setting clock

1. Press to turn on power.
2. Press and hold DSP; the display screen flashes and displays the clock.
3. Press |◄◄to set hour, press►►| to set minute.
4. Press DSP again for confirmation.

● Clock displays when this product is operating.

Press DSP to display time, and press it again to resume the previous display. After pressing DSP to display time, it will return to the previous display in 3s even if DSP is not pressed again.

● Button back light source selection

There are two kinds of back light sources for selection: the back light source is lit by turning on the small lamp, or the back light source is lit by turning on POWER button. When there is lamp control wire in the output wire harness, the back light source is lit by turning on the small lamp. When there is no lamp control wire in the output wire harness, the back light source is lit by turning on POWER button, Press to turn off the power supply, at this time the back light goes off.

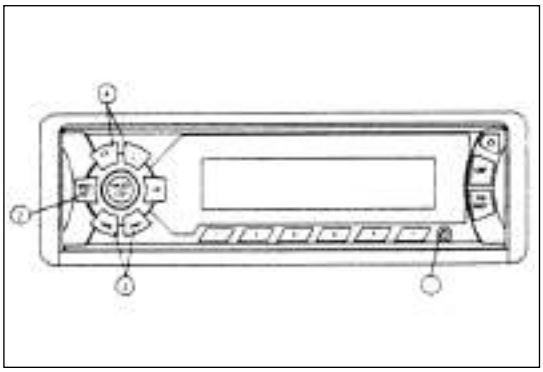

►Radio operation

1. Press ⏻ to turn on power.
2. Press BND to select frequency band from FM1, FM2, FM3, AM1 or AM2.

The frequency bands display in cycle in the aforesaid sequence.

- FM1, FM2 and FM3 have the same frequency range.
- AM1 and AM2 have the same frequency range.

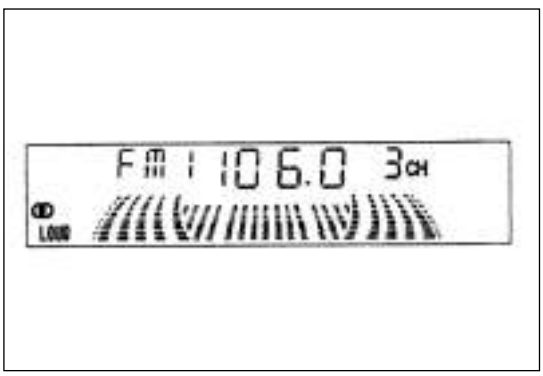

3. Press ►►| or |◄◄ to tune the desired radio station.

Press ►►| or |◄◄ for more than 0.5s to start scanning; the frequency increases upward or decreases downward automatically to seek the radio station; if this button is pressed again during scanning, the scan seeking can also be stopped.

If pressing ►►| or |◄◄ for less than 0.5s, the frequency will decrease gradually.

4. Use VOL+ or VOL- to adjust volume.

When receiving, press ⏻ to turn off the power; if pressing ⏻ again, the power is turned on, and it remains at the frequency before the power is turned off. When the tuning radio station is in stereo broadcasting mode and is receiving well, " ⊂⊃ " indicator is lit; otherwise, " ⊂⊃ " indicator is flashing.

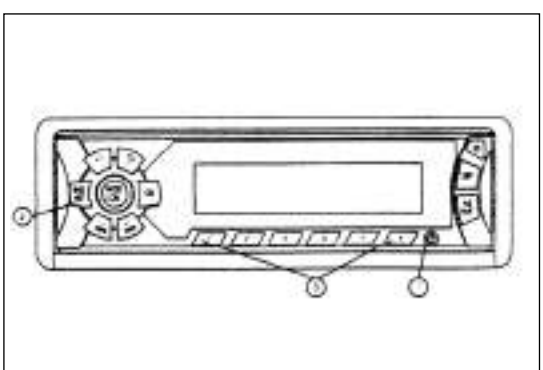

► Presetting radio station

Automatic presetting (automatic storage) radio stations

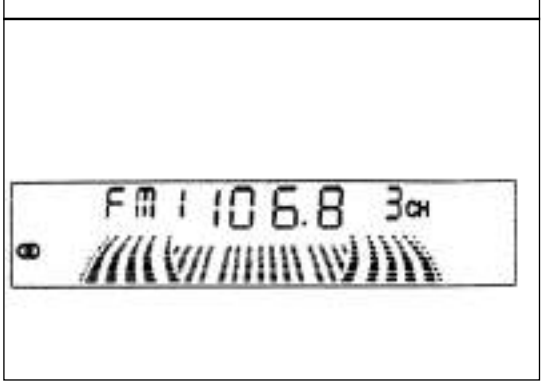

1. Press ⏻ to turn on the power.
2. Press BND to select FM or AM wave band.

During automatic presetting, FM1, FM2, FM3 are regarded as a whole, AM1 and AM2 are also regarded as a whole. Automatic presetting will be made in FM wave band or AM wave band.

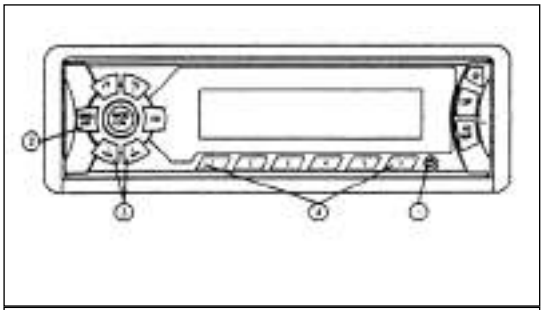

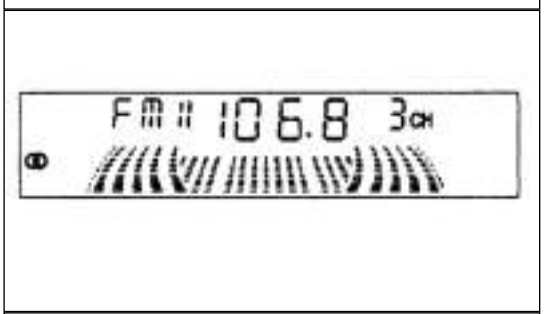

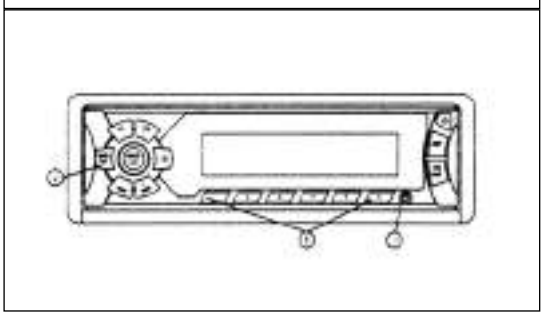

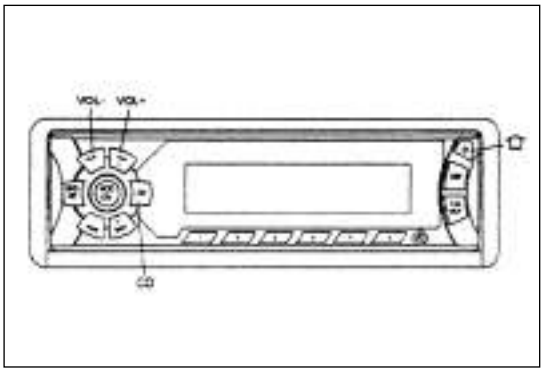

3. Press and hold BND/AST button for more than 2s, and automatic presetting radio station starts.
Automatic presetting starts from the current frequency, seeking within the whole current wave band; during this process, the screen displays frequency hopping.
The frequency modulation (FM) wave band of this product can store automatically 18 radio stations; amplitude modulation (AM) wave band can store automatically 12 radio stations.
● After completion of automatic storage, it plays the preset radio station in the current wave band corresponding to the preset radio station button 1.
● To stop the automatic storage, you just press BND/AST button again.

► Manual presetting (manual storage) radio stations

1. Press ⏻ to turn on the power.
2. Press BND to select the desired frequency range from FMA1, FM2, FM3, AM1 or AM2.
3. Use ★or ★to tune to the radio station you desire to preset.

4. Press any one of the radio station preset button for more than 1.5s.
● The preset radio station button number to be pressed is displayed on the screen.
● Repeat these steps, each frequency range of FMA1, FM2, FM3, AM1 and AM2 can be preset with 6 radio stations.
● If the preset button has already been preset with radio stations, by presetting another radio station on this button, then the previous preset radio stations are to be covered.

►Tuned to the preset radio stations

1. Press ⏻ to turn on the power.
2. Press BND to select the desired frequency range from FM1, FM2, FM3, AM1 or AM2.
3. Press the button of the radio station you desire to preset
Frequency of the preset radio station and the radio station No. are displayed on the screen.

► To play CD

1. Press the ⏻ button and the front panel falls down automatically.
2. Insert the CD in with the CD label facing upward.
3. Close the front panel; as this player has electronic shock proof, the CD begins to play in approx. 7 ~ 8s.
If CD is already in the player, press CD button to play the CD; press the button again, CD playing pauses.

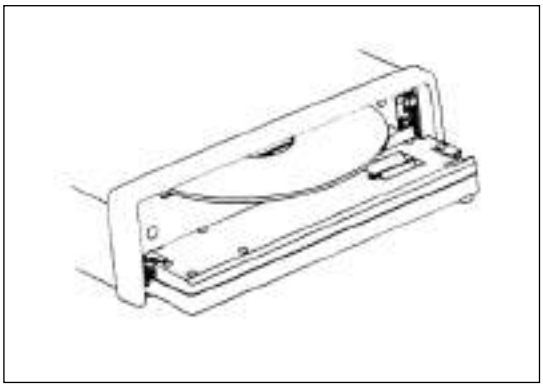

4. When switching receiving radio to CD play, CD starts to play in approx. 7 ~ 8s of a buffering time.

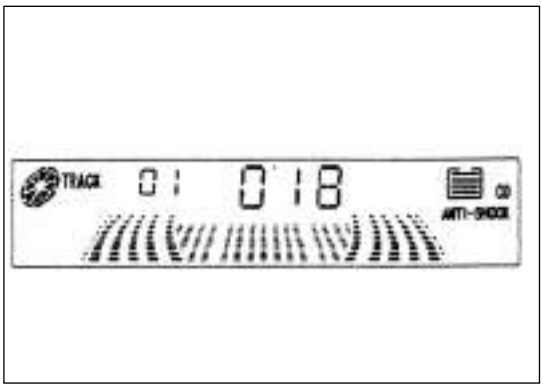

The screen will display song No. and the time played.

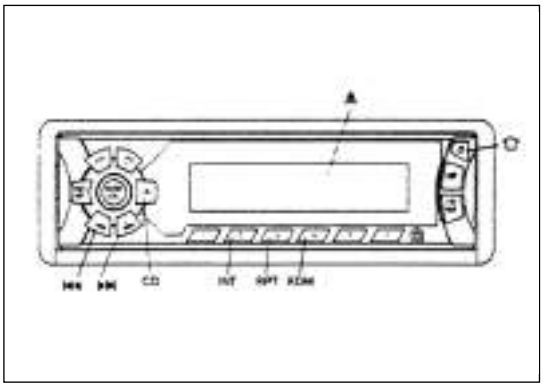

5. Use VOL+ and VOL- to adjust volume.

► Press the following buttons to operate CD playing

Button	Functions
⌂	Panel falling off automatically
⏏	CD ejected out
CD	To pause song playing. The current content displaying on the screen flashes; to resume playing, just press CD button again
►►|	Shortly press the button (less than 1.5s) once to skip to next song. One press on the button, it skips forward to one song. When pressing and holding the button, it is to search fast forward within the song until the desired part; when releasing the button, it starts to play from the part selected. When searching, CD playing time jumps backward.
|◄◄	Shortly press the button (less than 1.5s) once, it starts to play the same song from the beginning; when pressing it again, it skips to one song backward. When pressing and holding the button, it is to search fast forward within the song until the desired part; when releasing the button, it starts to play from the part selected. When searching, CD playing time jumps backward.

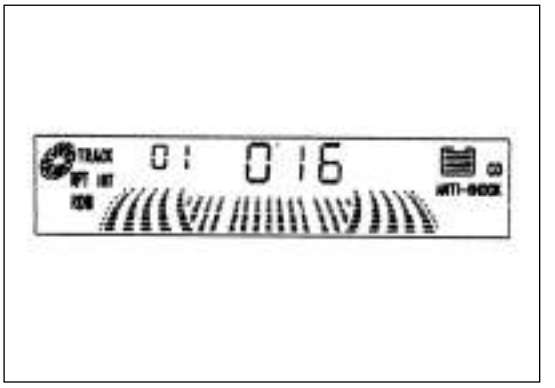

► To play repeatedly

Press RPT during CD playing.
"RPT" indication on VFD is lit, and the current song will be played in cycle repeatedly.
Press RPT again to cancel the repeated playing.

► Scanning to play

Press INT during CD playing.
"INT" indication on VFD is lit, and it starts to play the contents of the first 10s of all the songs from the next song on in sequence.
Press INT again to resume normal playing.

► Random playing

Press RDM during CD playing.
"RDM" indication on VFD is lit, and it starts to play randomly the songs on CD.
Press RDM again to resume normal playing.

► ESP ON/OFF button

When the player is turn on, ESP function is defaulted as ON, and "ANTI-SHOCK" on VFD is lit; when pressing this button, it is OFF, and when pressing this button again, it is ON.

- When pressing ESP ON/OFF, sound may pause for a short moment.

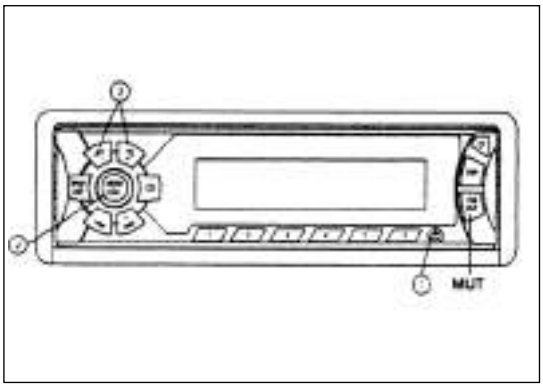

► Sound adjustment

1. Press ⏻ to turn on power.

2. Press MOD/LOU to select your desired item: BAS/TRE/BAL/VOL.

Corresponding to the above items, the following items display in cycle.

BAS↙TRE↙BAL↙VOL

3. Press VOL+VOL- to adjust sound intensity.

When pressing and holding any of the buttons, the sound intensity can be changed quickly.

Adjust every item according to the display on the screen.

Item	VOL-	VOL+
VOL	Decreasing volume	Increasing volume
BAS	Decreasing bass volume	Increasing bass volume
TRE	Decreasing treble volume	Increasing treble volume
BAL	Decreasing right loudspeaker volume	Decreasing left loudspeaker volume

When LOU button is not pressed, VOL- and VOL+ is the button for volume adjustment.

4. When shortly pressing EQ/MUTE, it displays in turn FLAT/ROCK/CLASSIC/POP.

► Mute control

Press and hold EQ/MUT button to mute the loudspeaker, and the MUTE is displayed on the screen. Press it again to resume the previous volume.

Under mute mode, MUTE is displayed on the screen, and flashing.

► Loudness control

Press and hold LOU button to increase bass and treble volume (especially when the volume is low), and LOUD is displayed on the screen; press and hold the button again to turn off the loudness.

► Troubleshooting

Trouble	Causes	Actions
It does not work after CD inserted	Volume control is adjusted at low	To adjust the volume control higher
	Power cord not properly connected	Check +24V and grounding connection
No power	Vehicle ignition switch is turned off	To switch ignition device to position “ON” or ACC
	Protective tube burnt out	To replace it with one of the same size
Radio having no signal	Antenna cable not properly connected	To insert the antenna cable plug into the player’s antenna socket tightly
Radio station cannot be turned off when using automatic tuning	Signal too weak	To select radio stations by manual tuning

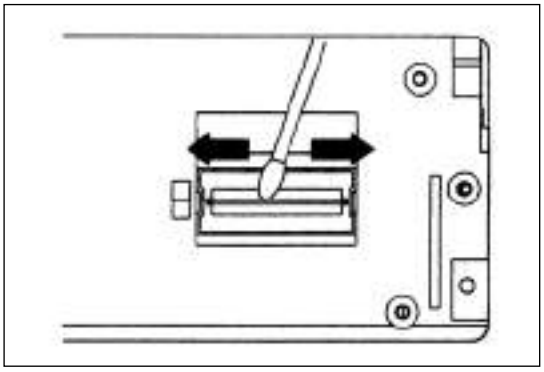

► Maintenance

● Cleaning of front panel

When the front panel gets dirty, please use soft dry cloth to wipe its surface.

● Cleaning of connector

If the connector at rear of the front panel gets dirty, it has to be cleaned. Use cotton ball dipped with slight alcohol to wipe the connector surface.

►Parameters

● Radio

(FM)

Frequency range: 87.5MHz-108MHz
Noise limited sensitivity: 12dB (S/N 30dB)
IF suppression: 85 dB
Signal noise ratio: 60 dB
Stereo signal noise ratio: 50 dB

(AM)

Frequency range: 522 KHz-1620 KHz
Noise limited sensitivity: 30 dB (S/N 20dB)

CD

Frequency response: 17Hz-20KHz 0—_2dB
Dynamic range: >80dB
Channel separation: >75dB
Channel balance: <1dB
Signal noise ratio: >80dB

●Audio frequency

Maximum output power:	18W×2
Tone control:	Bass±10 dB (100Hz)
	Treble±10 dB (10KHz)

●Others

Power supply voltage:	DC 24V, minus earth
Load impedance:	4-8Ω
Dimension:	177×58×188mm (W×H×D)

● In case there is any change in the above parameters, no further notice will be issued.

Cigarette Lighter

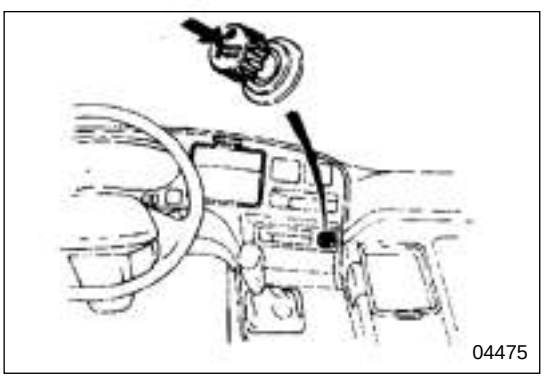

Warning ⚠

● Never press and hold the cigarette lighter continuously to prevent its automatic ejection, otherwise the cigarette lighter would be overheated and lead to danger.

● If the cigarette lighter still cannot be ejected automatically in over 30s, it indicates it is at fault. Pull it out with hand; otherwise it may cause fire. When the cigarette lighter does not work properly, stop using it, and go to the nearest Hualing Automobile Service Station for maintenance.

● Never leave the cigarette lighter in pushed-in state when leaving the vehicle.

● This cigarette lighter has to use 24V power supply. Never use cigarette lighter of 12V.

Warning ⚠

● Deformed cigarette lighter cannot be ejected automatically, it has to be replaced with quality cigarette lighter. The quality cigarette lighter can be purchased from Hualing automobile dealer or service station. Attention: never use poor-quality cigarette lighter.

● Never insert any plug of other electric appliances into the socket of the cigarette lighter, otherwise, the overload would cause such faults as being overheated and burning.

When the start switch is set to position ON or ACC, the cigarette lighter can be used. Push the cigarette lighter in, after a short moment it becomes red hot, and it will eject back to home position automatically, then it can be pulled out for lighting.

Ashtray

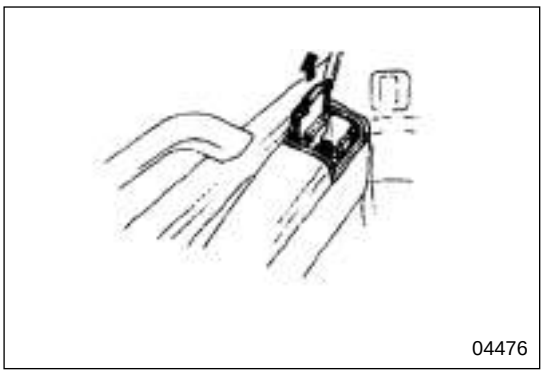

Warning ⚠

- Cigarette butts and matches can be put into the ashtray only after they are really extinguished. The ashtray must be covered after using.
- Never put any articles other than cigarette butts into the ashtray or leave the ashtray full of the cigarette butts; otherwise, fire may occur.

Each vehicle door is fitted with an ashtray. When it is full of cigarette butts, clean it timely.
When taking it off, hold the ashtray cover with hand and pull it upward out.

Cup Holder

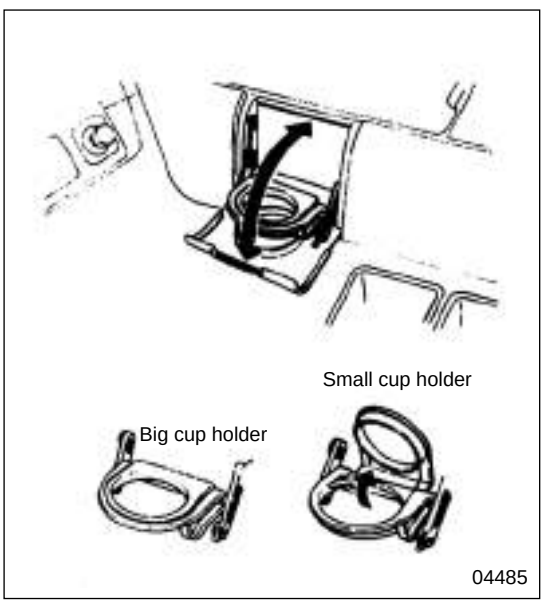

Cup holder can be used just by opening the holder cover. The cup holder has big and small sizes. When not used, close the holder cover, push and press the cover until click is heard
.

Caution ⚠

When using, take care not to let drink spill out. If drink is spilled out, wipe it clean immediately. Below the holder, there is fuse box, if drink enters the fuse box, it would cause electrical system fault.

Clothes Hanger

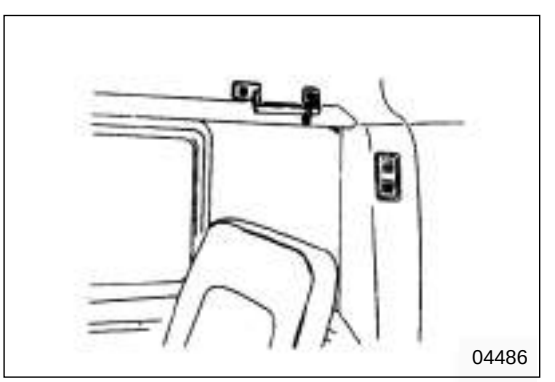

Towel, cloths, etc. can be hung on it.

Caution ⚠

Never use too big force to draw the hanger, or hang it with heavy goods, otherwise the clothes hanger may be damaged.

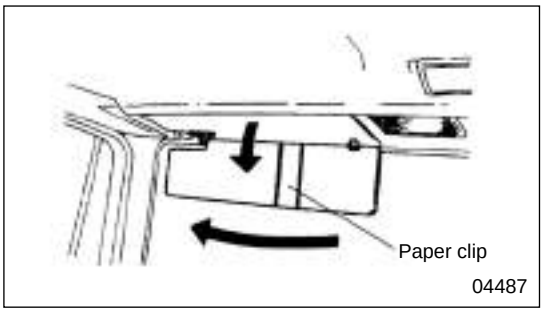

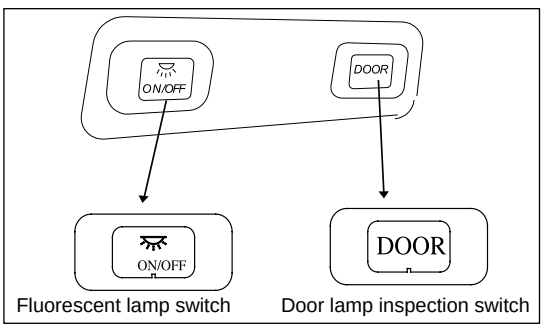

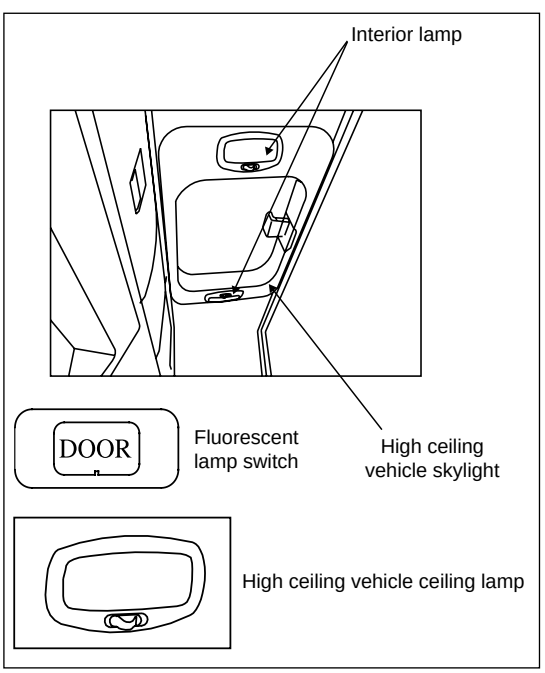

Sun Visor

It can shelter from direct sunlight and protect eyes. When using, change the angle properly. By removing one end and turning aside, it can be used as sun visor for door side; some of vehicles are also installed with sun visor for assistant driver (optional).

There is paper clip on the driver-side sun visor, which can be used for clipping tickets and bills, etc.

Caution ⚠

If personal lamp is used for a long time with the engine in off state, the battery will be over discharged. Before leaving the vehicle, do remember to turn off the lamp.

Fluorescent Lamp

Interior lamps of high ceiling vehicle are located on both sides of the high ceiling vehicle skylight, each lamp has independent switch to control On/Off of the two lamps separately. Besides, Fluorescent lamp switch can also control On/Off of the two lamps.

Interior Rear View Mirror

It must be adjusted to proper angle so that the rear view side can be seen.

Glove Box

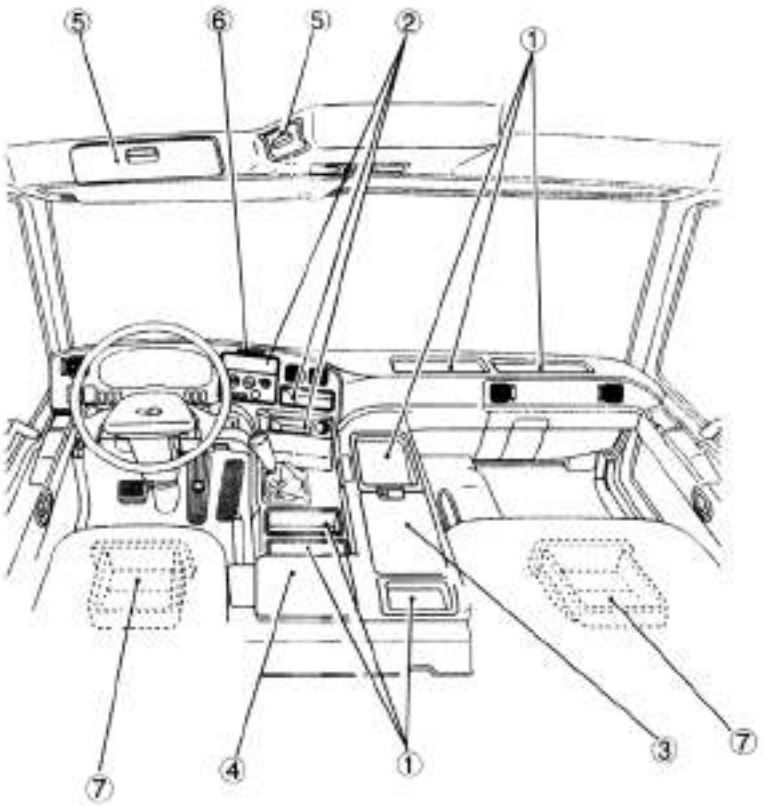

Z10151

Warning ⚠

Never place in the glove box any goods that may fall down or roll down, otherwise, they would roll down when the vehicle starts or stops, impeding safe operation.

Caution ⚠

Before vehicle starts, the glove box cover must be closed. If not closed, it would be bumped and damaged.

① Holder

② Concave box (if there is CD, one concave box will be occupied)

③ Floor type glove box

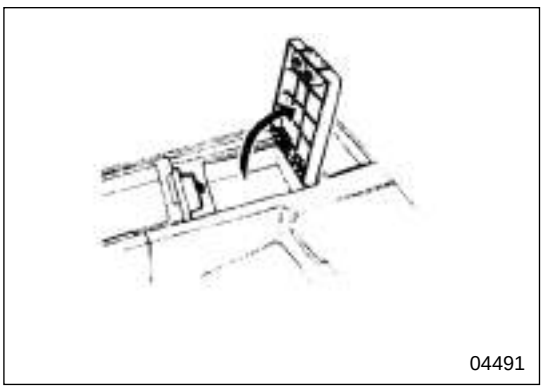

④ Floor type glove box

If running recorder (optional) is installed, the recorder can be kept in this glove box.

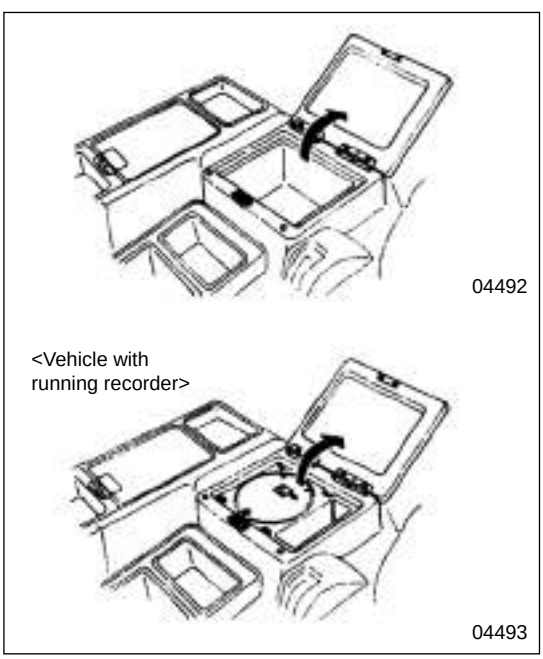

044894

044895

⑤ Top glove box

As an option, some vehicles are installed with top glove box with cover beside the assistant driver's seat.

Warning ⚠

- Never place in the top glove box any goods that would roll, otherwise, it would roll down during running and injure the occupant.
- Never place any goods on the horizontally opened/closed glove box cover; otherwise the box cover would open up completely, letting goods fall down.

The box cover of the front side top glove box can be at horizontally opened position, once stops, but by pulling it down again, it can be opened completely.

⑥ Paper clip

Paper clip can be used to clip tax-receipts, tickets and bills, etc.

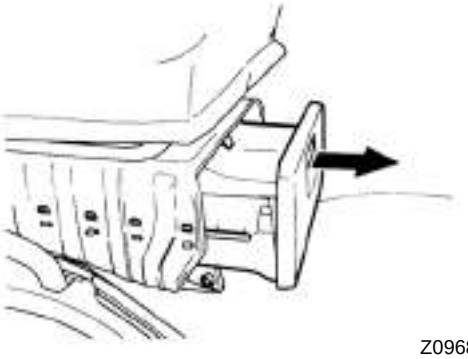

Z09680

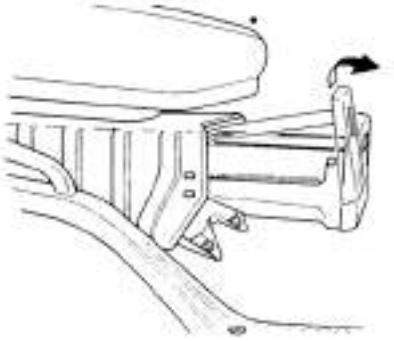

Z09681

⑦ Glove box under the driver's seat

In the vehicle installed with optional air suspension, no glove box is installed under the driver's seat.

Please pull it out for use. If you want to take it off, pull it out till stopper, then pull upwards toward yourself. When installing, uplift toward yourself, insert it into guiding slot, and push it in.

Operating Methods during Cold Weather

00264

Coolant

● Upon ex-factory of the vehicle, original long-life coolant for Hualing diesel engine has been added. This coolant has both anti-freezing and anti-rusting functions, hence it will not cause freezing of cooling water. However, for the purpose of safety, when cold day is coming, go to Hualing automobile service station to check for suitable coolant concentration.

● For vehicle being used, Hualing engine long-life coolant of specified concentration should be added.

Note

For vehicles using Hualing engine long-life coolant, it is not necessary to add any other anti-freezing agent.

External air temperature during engine startup

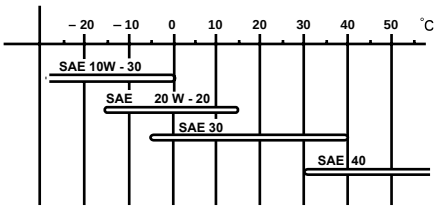

00733

Engine Oil

Engine oil viscosity may rise with fall of air temperature, causing difficult starting in early morning. Replace it with engine oil of viscosity suitable for the air temperature.

00266

Diesel Oil

Ordinary diesel oil may freeze, in which case engine cannot be started.

Before going to a cold place, add fuel so that when arriving at the destination, remaining fuel will be less than half tank capacity. And then add local diesel oil (suitable for the cold region) as soon as possible.

Other Precautions

● Start engine using the method described on pages 4-6. If the engine cannot be started, temporarily turn starting key to position ACC or LOCK, and start again when batteries are restored.

● When air temperature falls, battery performance will also deteriorate. Frequently check amount and specific gravity of battery fluid.

● In extremely cold region where minimum air temperature may fall to below -25℃, it is necessary to use special lubricants (oil and grease). For details, contact nearby Hualing automobile service station.

● When parked, to avoid freezing of engine coolant and consequent damage of vehicle, drain the coolant. When doing so, in addition to engine water drain switch and radiator water drain switch, coolant can also be drained via water drain switch on radiator pipeline.

● Windshield washing fluid shall be adjusted to a concentration suitable for the cold weather.

● When running or parking on a snowy road, sometimes braking effect will be lowered. Therefore, during driving, pay attention to vehicles in front and behind, and road conditions. Slightly step down brake pedal to confirm braking effect. (At this time, pay attention to road conditions and other vehicles). If braking effect is not good, reduce speed and step down brake pedal a number of times till normal braking force is restored.

● On throttle cable or other parts, if damaged jacket or rubber sleeve is found, replace in time.

● When removing ice and snow etc. from lower part of vehicle and mudguard etc., pay attention not to damage parts.

● For parking the vehicle, select a place away from wind and snow. At the same time, head of vehicle shall face leeward as much as possible.

In very cold weather, if you pull out hand brake handle to park the vehicle, the hand brake may freeze, so that brake cannot be released. For this reason, park the vehicle using the following methods without the need to pull out hand brake handle.

1. When parking, use parking brake.
2. After stall of engine, push change lever to gear 1 or reverse gear. Do not park the vehicle on a slope.
3. Place bolster under tyres to prevent moving of vehicle.
4. Push back hand brake handle to release hand brake.

● For vehicles with air conditioning, in cold period when air conditioning is not used, start air conditioner once a month to maintain its performance.

Notes

● If icing of doors occurs, use hot water to melt the ice and then wipe off water to prevent freezing again. Do not force open any door; otherwise door rubber seals may be torn or damaged.

● In very cold weather, rubber parts at key hole and doors may freeze, sometimes causing failure to insert key or open the door. In such case, after washing vehicle body, completely remove water and inject silicon oil into key hole and door frame to prevent freezing.

Methods to Install Antiskid Chains

● Please fit antiskid chains on rear wheels (driving wheels).

For vehicles with dual rear axles, please install tyre chains on rear front wheels.

● Install antiskid chains correctly to avoid falling during running or interfering with other parts. Use 3-fold tyre chains suitable to tyre size.

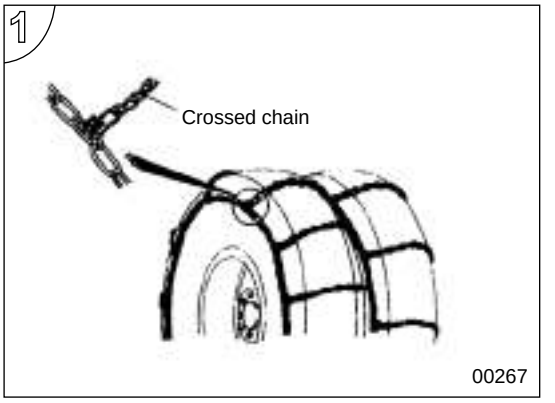

Notes

● Antiskid chains must not be installed on front wheels. Use special tyres for snow on front wheels.

● Check antiskid chains and spring belts for wear and damage.

1. Bending of crossed chains shall face outer side, to allow installation of antiskid chains.

2. Use inner side chains only so that wheels are in a state without surplus, and connect hanging hooks. Provide crossed chains pulling inner side tyres outward, to eliminate slackness of inner side chains.

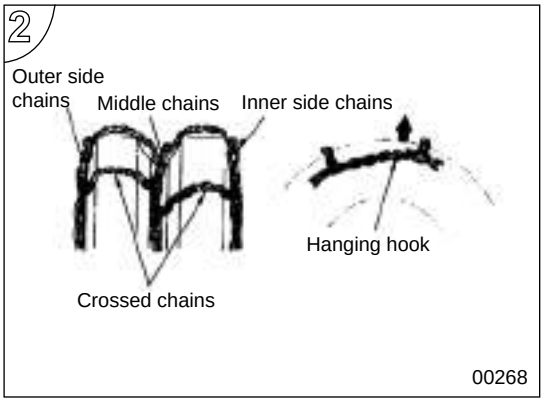

Note

Pull hooks outward as much as possible.

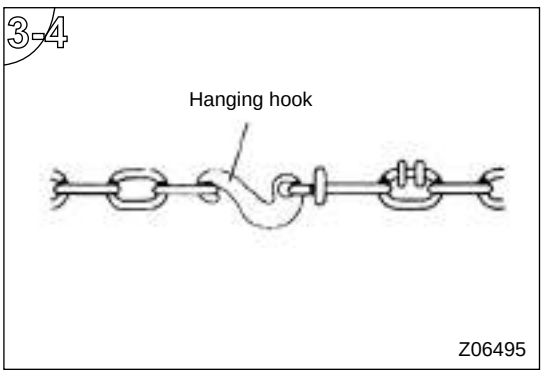

3. As shown in the figure, temporarily fix hooks of outer side chains.

4. Pull tight middle chains as much as possible and connect hooks.

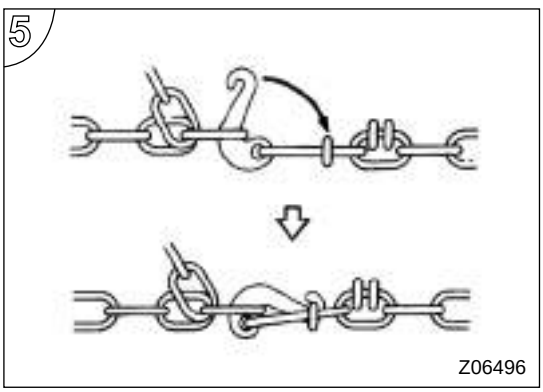

5. Pull tight both ends of outer side chains and connect hooks.

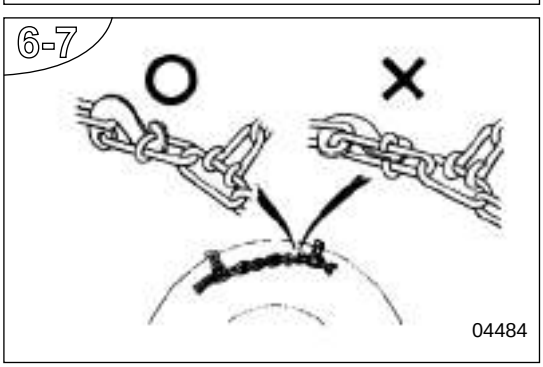

6. Confirm that each hook is parallel to tyre side wall. At the same time, confirm that chains have no twisting part.

7. Use iron wires to fix remaining chains to prevent contacting other parts.

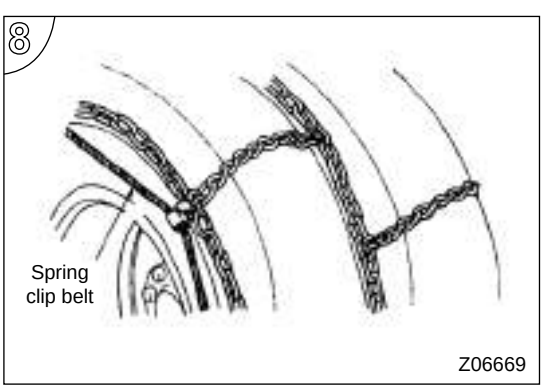

8. Tighten spring clip belt. Each pawl of spring clip belt shall face outside and be installed in an even manner.

- After running for 5~10min, check for slackness or falling.

Notes

- When chains are installed, running speed must not excee d 30km/h.
- Antiskid chains must not be used on roads without ice or snow; otherwise chains may be damaged.

Simple Checks, Maintenance and Service

Note to Check and Maintain

- Pull out the start key after engine stopping.
- Parking brake is truly in the state of braking and the gear box lever at the neutral position.
- Put into wheel stopper.
- Prevent from scald due to high temperature of engine soon after engine stopping. Repair and maintain when engine cools down
- Keep object from inlet pipe.
- Do not step on pipes, air cleaner or accessories during inspecting and repairing, otherwise damage will be caused.
- Do not leave any cloth, paper or tool in the engine compartment after check or repairing, especially the tinder, otherwise a fire would be caused.
- Insure that necessary oil, liquid and coolant is filled correctly after check and maintenance.
- Maintenance for Balance shaft: supply grease per 2000~4000km.

Caution ⚠

- The seal on fuel injection pump of engine is not allowed to be touched off and fuel injection pump not be readjusted since fuel injection pump has been adjusted in the best condition by the supplier, otherwise that power reduction, smog and bad emissions will be caused.
- Do not remove any frame cover around the engine which is used for reducing noise.
- Replace filters and filtering elements by unique spare parts of Hualing vehicle and use oil and grease that we recommending.

Note:

Special grease shall be used at the areas with temperature below -25℃. Inquire the nearest Hualing service station for detail.

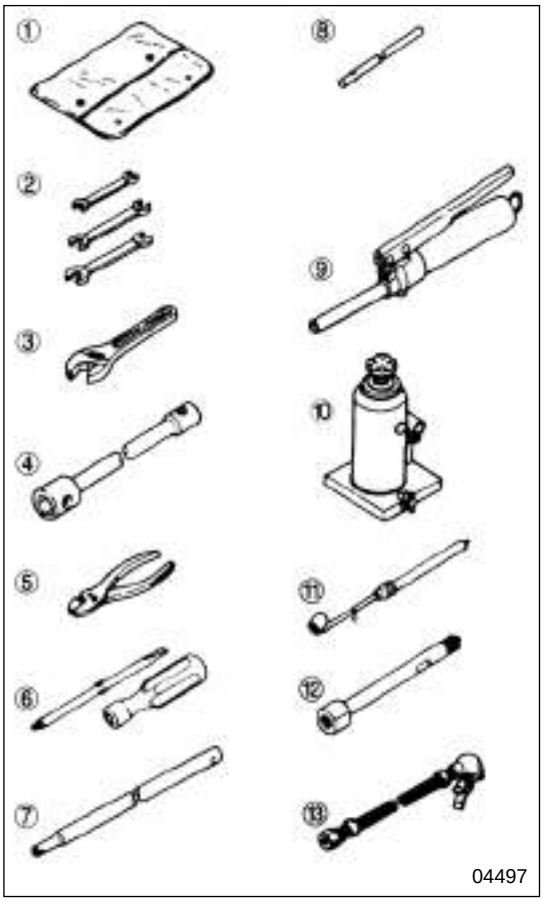

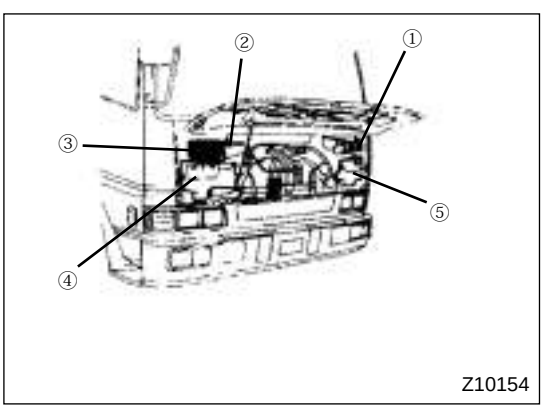

Driver's Tools

The tools for routine check, repair and maintenance are supplied in vehicle:

① Tool Bag
② Wrench (1 unit: 3 wrenches)
③ Monkey Wrench
④ Socket Wrench(used for wheel nuts)
⑤ Pliers
⑥ Screw Driver
⑦ Wrench Handle(for socket wrench, hydraulic jack and spare tyre carrier)
⑧ Lever (for wrench handle and hand pump for tipping cabin)
⑨ grease gun
⑩ hydraulic jack
⑪ Tyre gauge
⑫Tyre valve extending unit
⑬ Tyre inflation hose

Caution ⚠

- Driver's tools shall only be used for specific purpose.
- Driver's tools vary with the requirements.

Opening and Closing of Front Grill

Open the front grill while inspecting, repairing the parts of the front vehicle and checking before running vehicle.

After checking or repairing, close the front grill and assure the grill being locked.

① Clutch liquid reservoir
② Refrigerant check window of A/C (if with A/C)
③ Air cleaner of A/C
④ Washer fluid reservoir of windshield glass
⑤ Coolant reservoir

► Opening Method for Front Grill

Warning ⚠

- When start key is on the ON position, the front grill is not allowed to be opened, or parts damaged or finger hurt is caused by wiper accident movement. Additionally, pay attention not to touch the front grill corner with head.
- The accident may be caused when the grill is opened in strong wind.

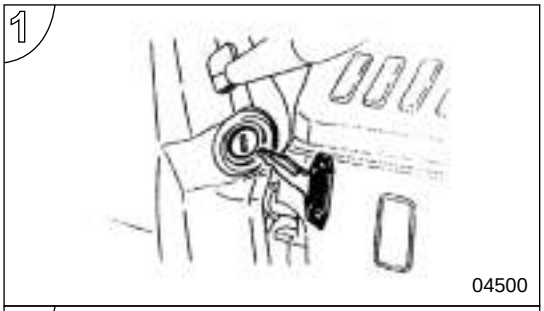

1. Assure that start key is pulled out or at the LOCK position. If the check lamp of optional parts is used, the key shall be at the ACC position.

2. Pull out interior bonnet lock releasing lever.

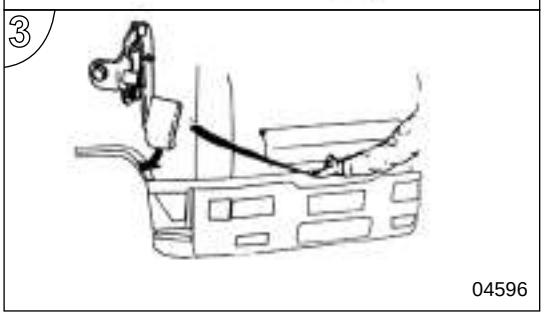

3. Pull out exterior bonnet lock releasing lever. Push the wiper back to windshield glass if the wiper is not on the glass.

Warning ⚠

Due to the high elasticity of the spring when opening the front grill,the front grill will bounce suddenly and it may hurt your face,please press the front grill with one hand before opening the bonnet lock with the other hand and then release the front grill slowly.

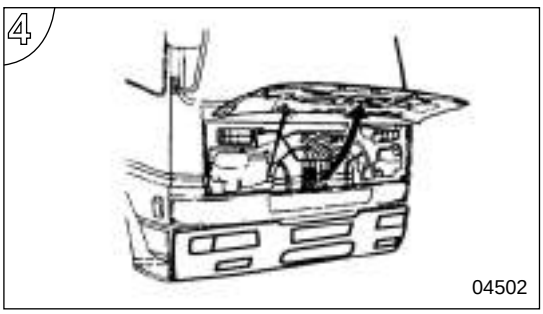

4. Open the front grill completely.

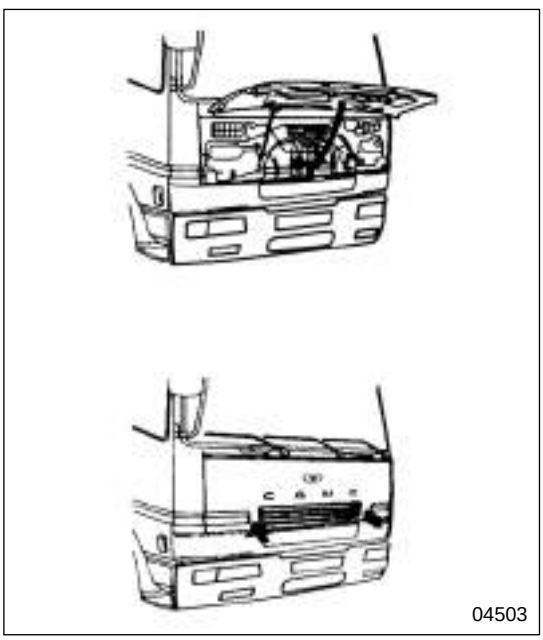

► Closing Method for Front Grill

Lower the front grill slowly and press the part indicated in the figure until a sound of crack is heard. Check the front grill whether it is locked or not.

Tip Cabin

► Preparation

- Park the vehicle on an even ground and stop engine.
- Ensure the brake is efficient and keep the brake in the state of breaking.
- Shifting lever shall be in the neutral position.
- Drain water from cabin completely.
- Before tipping cabin,put the object inside the cabin outside or keep them fixed for preventing accident occurring.
- Ensure the right/left door is closed tightly.
- Move away obstacle and leave a space more than 1.2m above the cabin.

Warning ⚠

- Ensure that the surrounding is safe before tipping or lowering the cabin.
- Never tip the cabin on slop way because that may cause parts damage and hard hatch buckling.
- Never tip the cabin when anyone is in the cabin.
- Ensue the safety when there is heavy object in the cabin or rack on the cabin, because the cabin will drop down suddenly.
- Always use manual brake and put at the neutral position for preventing the gear box from being out of the position.

► Dynamic Tip(Integral type)

The cabin can be dynamically tipped by the controller shown as in the figure. The start key position is not important now.

① Control handle
② Shear pin
③ DOWN position
④ UP position
⑤ Manual plug

Warning ⚠

- Never stopping tipping the cabin halfway. Otherwise the cabin can not be locked completely when stopping operation halfway. Keep tipping until the buzzer stops buzzing.
- Never go to the space under the cabin during the cabin reversing or lowering.

Note:

Reverse the cabin when transmission is at the neutral position.

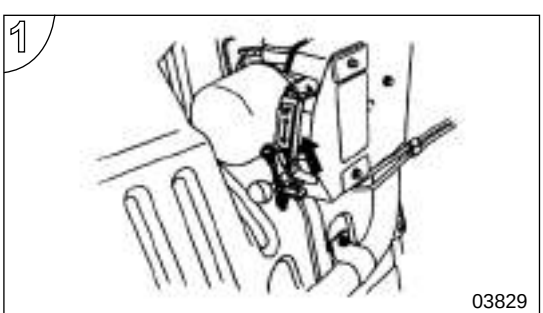

- Tip Cabin

1. Pull out shear pin.

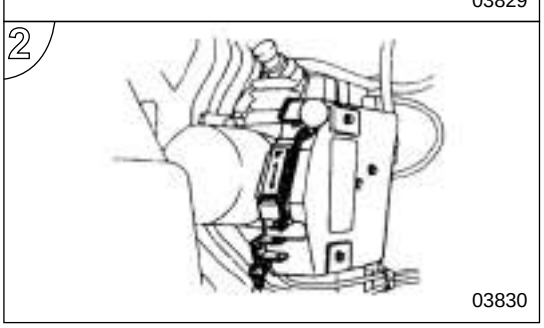

2. Push the control handle from the position of DOWN to UP. Buzzer buzzes. Pull control handle backward the vehicle and keep it at this position when tipping the cabin.

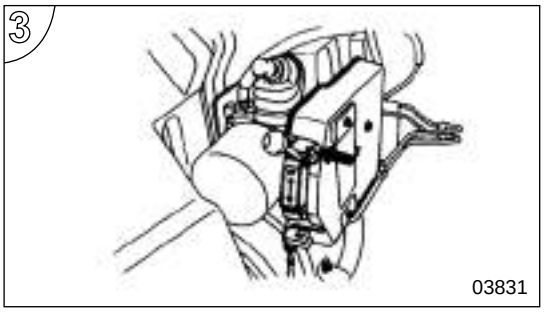

3. Buzzer stops buzzing when the cabin tips completely and stops. Push control handle to the position of UP and lock it.

Warning ⚠

If working under the cabin is necessary, confirm once more that control handle is truly at the position of UP. This is a very important procedure to ensure the safety.

● Lower the Cabin

Warning ⚠

Check if there is cloth odd bits, paper or tool in the engine compartment since the flammable material will cause fire possibly.

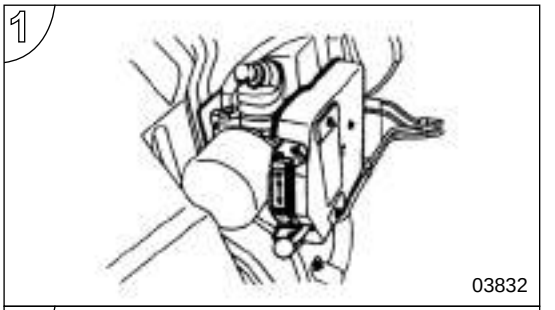

1. Push the control handle from the position of DOWN to UP. Buzzer buzzes. Pull control handle backward the vehicle and keep it at this position when tipping the cabin.

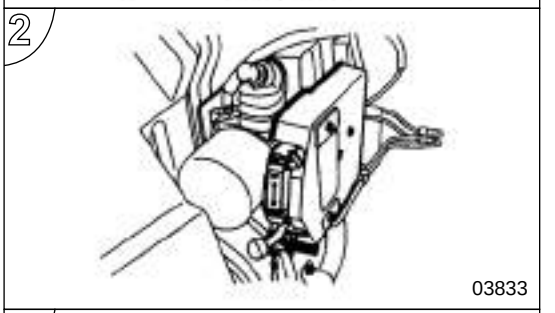

2. Buzzer stops buzzing when the cabin tips completely and stops. Push control handle to the position of UP and lock it.

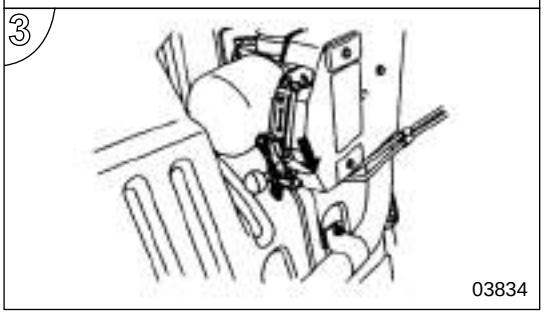

3. Insert shear pin.

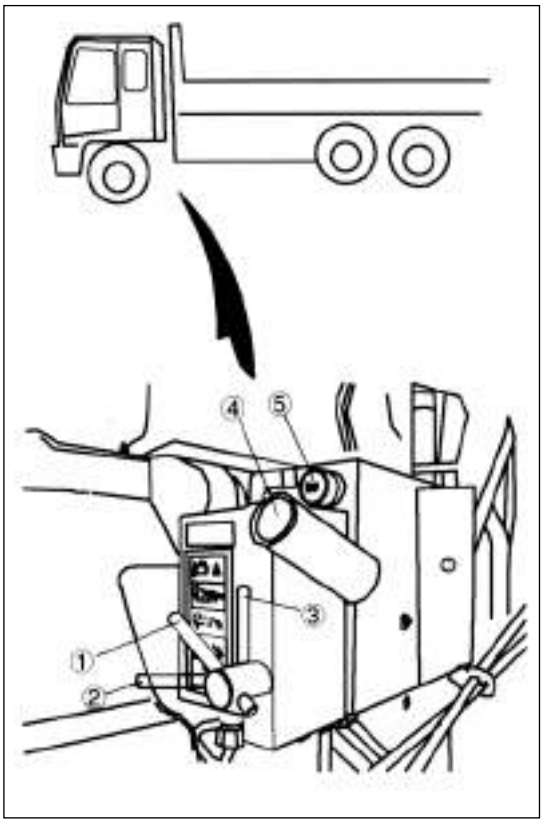

► Dynamic Tip (Separated type)

Tip the cabin dynamically by the controller shown in the figure. Dynamic key position is not important.

① Reversing switch
② Up position
③ Down position
④ Manual plug
⑤ Control button

Warning ⚠

- Never stopping tipping the cabin halfway, otherwise the cabin can not be locked completely when stopping operation halfway. Keep tipping until the cabin is locked with gantry frame.
- Never go under the cabin during operation.

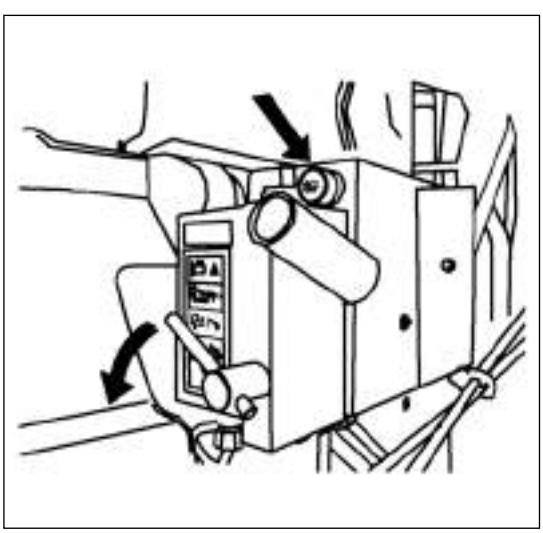

- Tip the Cabin

1. Push the changeover handle at UP position and press control button, the motor starts and the cabin is up.
2. Stop pressing the button while cabin can not be lifted up.

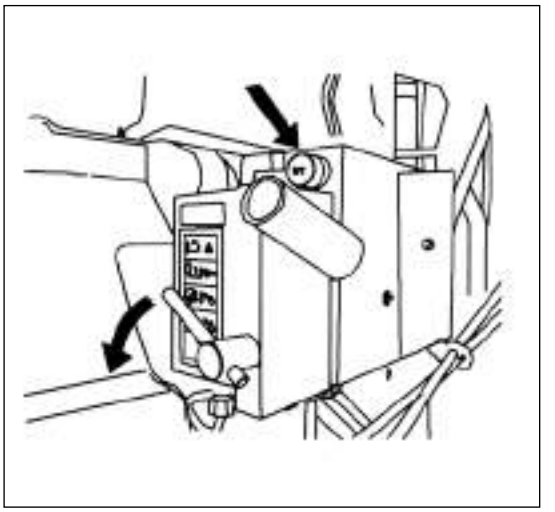

Warning ⚠

If working under the cabin is necessary, confirm once more that changeover handle is truly at the UP position. This is a very important procedure to ensure the safety.

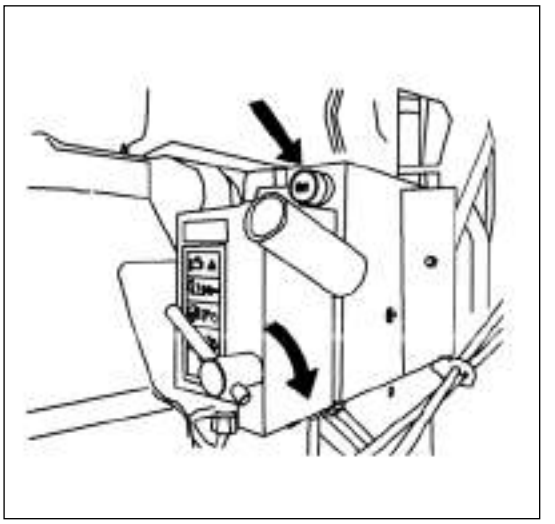

● Down the Cabin

Warning ⚠

Do not leave inflammable matters,such as, the cloth, paper or tool, in the engine compartment when lowering the cabin,otherwise the fire will be caused.

1. Push the changeover handle at DOWN position and press the button, the motor starts and the cabin is down.
2. Stop pressing button while the cabin is on the gantry frame and the bolt is locked.

Note:

It is normal that an impact is arisen due to the idle motion for liftingup fuel tank when the cabin is set on lock on the gantry frame firmly.

Caution ⚠

Air inlet pipe shall be aligned with rubber protecting sleeve while lowering the cab.

Note:

The lever linkage between control handle and safety device is released. If the control handle can not be or is hardly moved downward, the safety device works and the control handle should not be forced to operate. At this case, push the control handle to UP, tip the cabin completely by starting the motor or manual controlling oil pump, and then, try to lower the cabin. If the safety device is still working at this moment, check the device at the nearest service station of Hualing.

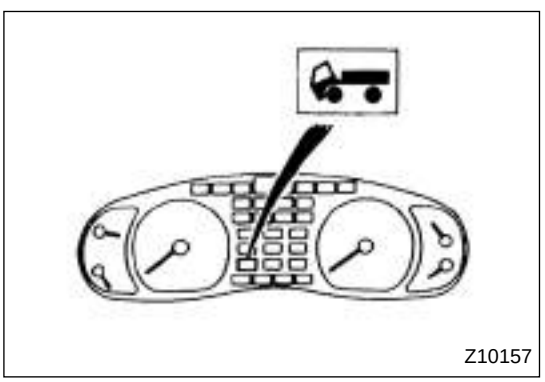

● Turn the start key to the position ON, and confirm that the warning lamp is off. If the lamp is on, repeat the operation of tipping and lowering the cabin.

● Tipping the cabin when electric system fails.

The cabin can be tipped with manual controlling pump when dynamic tip mechanism can not be used due to the electric trouble or the over-discharge of battery. At this time, go to the nearest Hualing service station and have a check.

Please refer to page 13-5 for notes to tip the cabin.

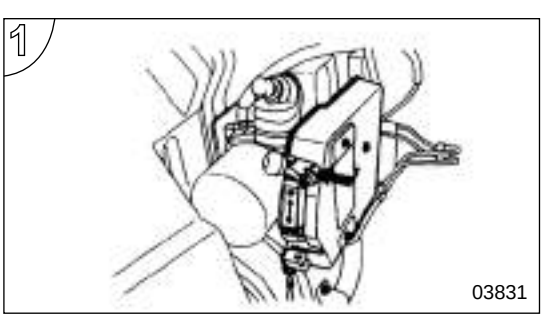

● Tipping the Cabin

1. Pull out the shear pin and push the control handle to the position UP.

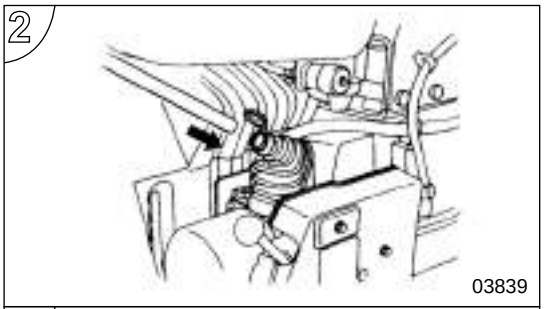

2. Remove the cover from plug of manual controlling oil pump. Insert the extending lever (in the driver's tools kit) into the manual controlling oil pump plug.

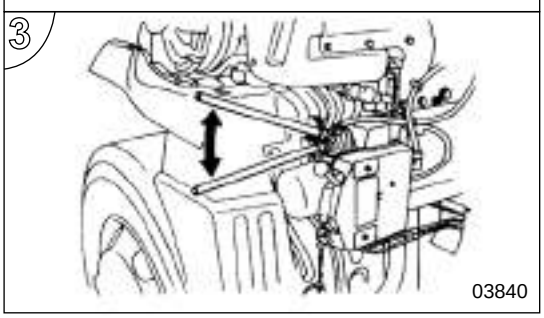

3. Operate the extending lever up and down in the same way of operating hydraulic jack.After the cabin tips completely, it stops movement. And after it stops, operate the extending lever several times.

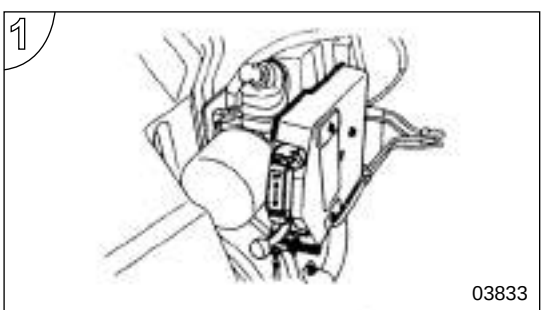

● Lowering the cabin

1. Move the manual controlling handle to the position DOWN.

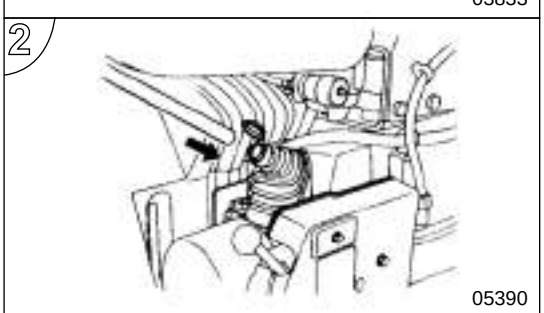

2. Operate the extending lever in the same way as tipping the cabin. Although the cabin stops as soon as it gets down, the extending lever still needs to be operated continuously until the resistance is felt.

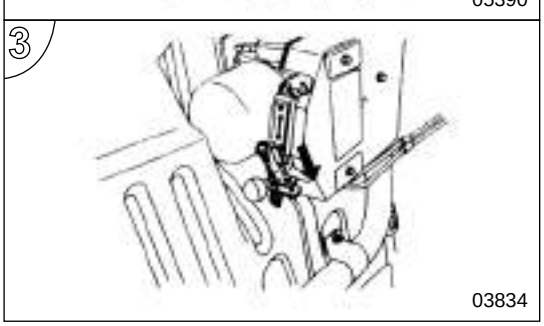

3. Remove the extending lever from the plug of the manual controlling pump. Reset the plug cover and insert the shear pin.

Check before Vehicle being Dispatched

The vehicle shall be inspected following below procedures before being dispatched to ensure safety and comfort. If any abnormality is found, repair it at the nearest service station of Hualing.

► Prior to starting engine (open the front grill)

 04537	**Coolant Volume** Check if the coolant level between lines FULL and LOW

.

► Prior to starting engine (open the front grill)

 04538	**Engine Oil Volume** Check if the engine oil volume is enough with oil dipstick.
 01489	**Tension and damage of fan belt** Inspect belt bend degree by pressing the middle of belt with force 98N {10kg} and check the fan belt for damage.
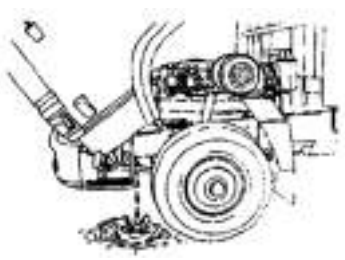 04539	**Check coolant, fuel and oil for leakage.** Check for leakage under vehicle.

► Inspecting around vehicle

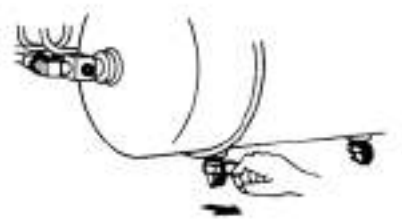 03202	Drain water from air tank. Pull the ring of release plug on the air tank and drain condensed water. It is normal that condensed water is little in air tank if there is dryer in it.
 03198	Check tyre for damage Check tyre pattern depth and tyre for foreign matters, crack or abnormal wearing. Tyre pattern depth: 1.6mm or more
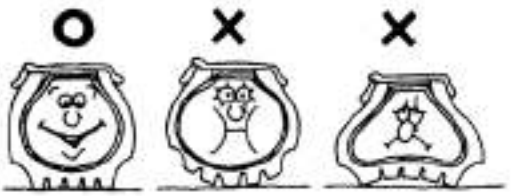 00685	Tyre pressure Inspect footprint between tyre and road to see if the pressure is normal and check air pressure more exactly with air pressure gauge.
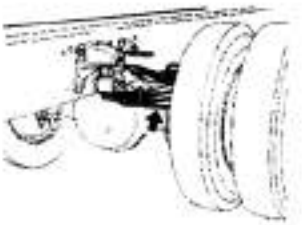 04540	Check leaf spring of chassis for damage. Check each leaf spring for damage and vehicle body for abnormal tilting.
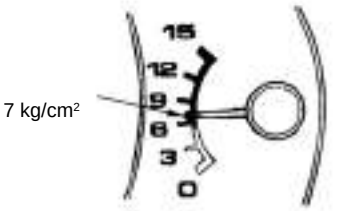 03208	Speed of air pressure increasing Air pressure in the tank should increase from 0 to 7kg/cm² in 10 minutes.

 03915	**Working Condition of Foot Brake** ● Ensure idle running distance of brake plate is 10~15.5mm. ● Step on brake pedal and release it. Check if sound of exhausting air is heard and pedal can be reset.
 Z10077	**Operate controlling valve of the cabin.** Check if sound of exhausting air can be heard. Ensure that parking brake valve is not locked and works well.
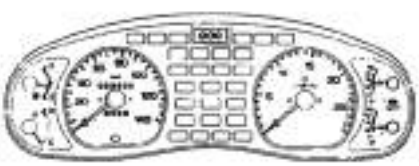 Z10158	**Working Conditions of Instruments and Warning Lamps** Check if all instruments and warning lamps work well.
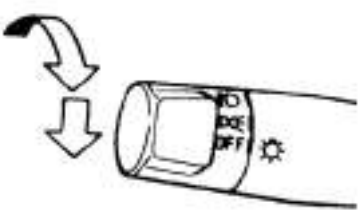 04543	**Working conditions of illuminator system** Ensure that lights are on/off normally and check glass for contamination.
 04544	**Performance of wiper and scrubber** Check if jetting position of the scrubber is proper and wiper works normally.

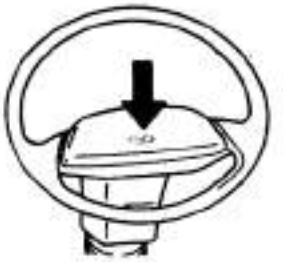 04545	**Horn Buzzes** Press horn button and check if it buzzes.
 03919	**Self-acting travel of steering wheel** Turn slightly the steering wheel, check if self-acting travel between 15~35mm
 04546	**Lock knuckles of doors** Press lock-knuckle knob, pull interior handle of the door and check if the door can be opened.
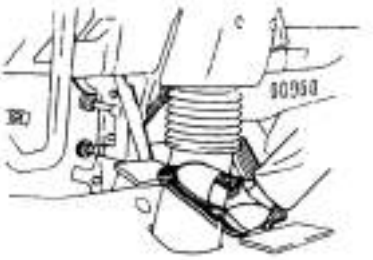 04547	**Brake Effects of Brake** Drive vehicle at low speed on a safe place, step down the brake pedal and check braking performance and for offset braking.
 04548	**Steering wheel performance** During driving vehicle at low speed on a safe place, check the wheel for vibration, bias to one direction ,too heavy to operate or bad reset.

Filling Lubricant

► Grease Fitting

This chapter describes the way to fill grease into grease fitting nipple with grease gun. Please inquire the nearest service station of Hualing about some details on lubricated parts after repair.

Clean the nipple around prior to filling grease. Additionally, the recommended grease shall be used.

Filling Grease Interval	Each 5,000km

Filling grease point with*:each 25,000km

Recommended Grease:

● Wheel bearing grease(multi-purpose)

NLGI No.2(lithium base grease)

Fill grease at points ①,⑤,⑩,⑪,⑫,⑭,⑮as shown in the figure.

● Mix molybdenum disulfide grease.

NLGI No.2(lithium base grease)

Fill grease at points ②,③,④,⑬as shown in the figure.

● Chassis Grease:

NLGI No.1(lithium base grease)

Fill grease at points ⑥,⑦,⑧,⑨as shown in the figure.

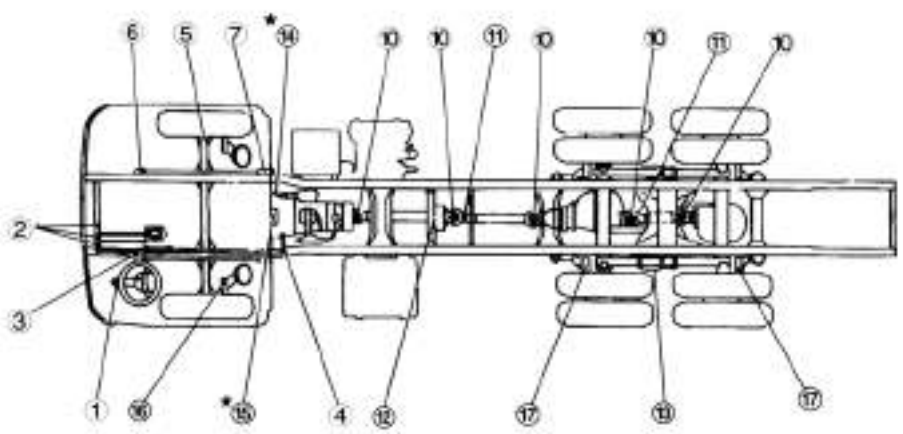

Z10163

①
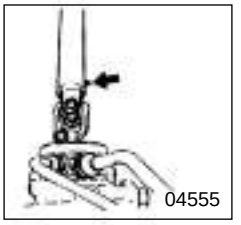

②
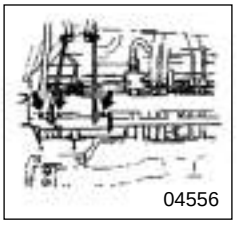

③
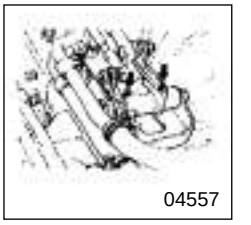

④


⑤
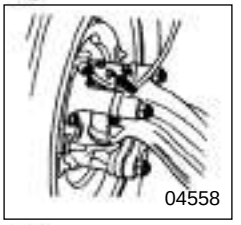

⑥
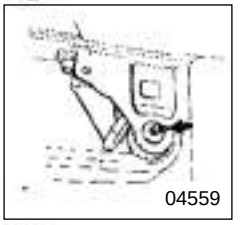

⑦
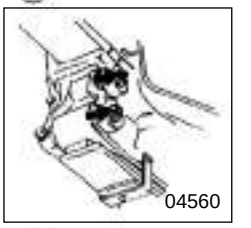

⑧
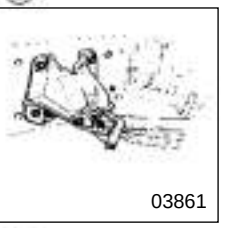

⑨
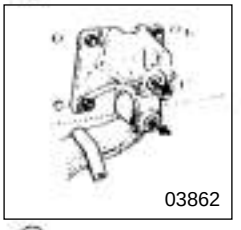

⑩
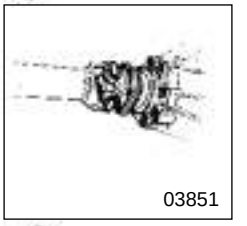

⑪
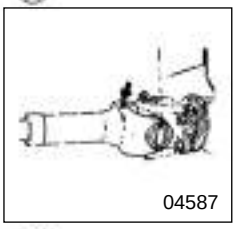

⑫
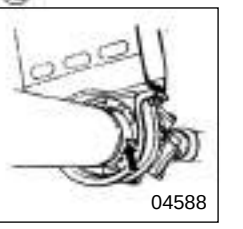

⑬
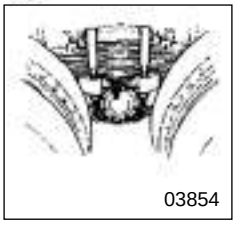

*⑭
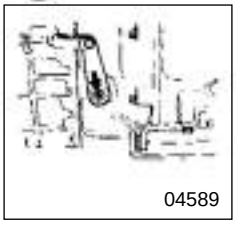

*⑮
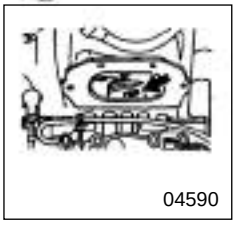

① Steering Wheel Shaft
② Transmission controlled upper lateral shaft
③ Transmission controlled front shaft
④ Transmission controlled rear vertical shaft
⑤ Steering main pin of front axle (right and left)
⑥ Front leaf spring-front end (right and left)
⑦ Front leaf spring-rear end (right and left)
⑧ Rear leaf spring-front end (right and left)
⑨ Rear leaf spring-rear end (right and left)
⑩ Universal joint head of driving shaft
⑪ plunging joint of driving shaft
⑫ Propeller shaft center bearing
⑬ Cross-shaft needle bearing (left and right) <FV model vehicle>
★★⑭ release fork shaft(right and left) of clutch
★⑮ Clutch shifter

Fill grease at each 25,000km for the points with★.

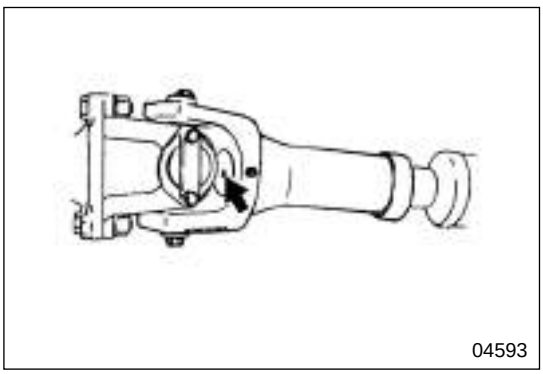

Note:

● The added grease points with ★vary with vehicle model.

● Fill grease until it can be squeezed out of holes of dust plug when filling grease to driving shaft sliding joint.

Caution ⚠

Do not fill extra grease to clutch shifter, otherwise the clutch will skid.

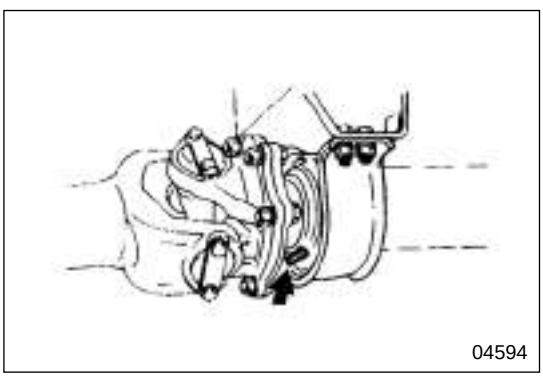

● Fill grease to propeller shaft center bearing until grease is squeezed out of overflow valve (opposite side of grease filler).

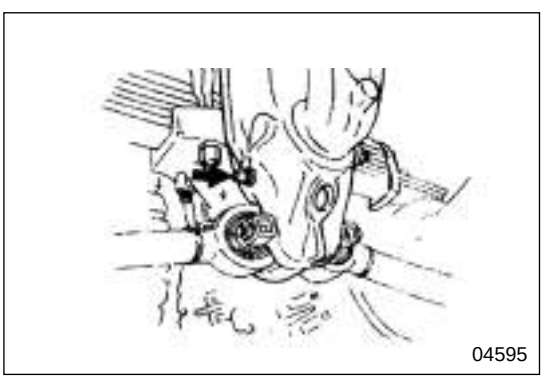

Fill grease to cross-shaft needle bearing until grease is squeezed out of overflow valve.

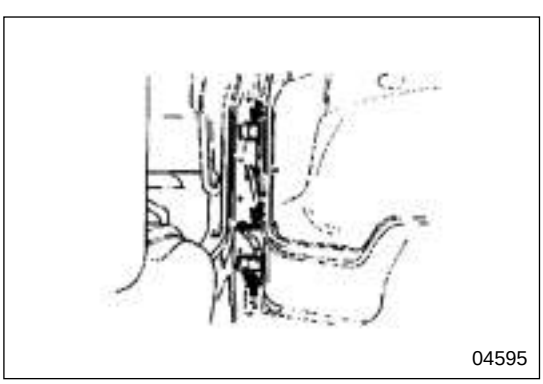

► Door Hinge (right and left)

Daub grease to both hinges of each door.

Filling Grease Interval	Each 5,000km

Recommended Grease

Chassis Grease

NLGI No.1(lithium base grease)

04598

► Side cushions (right and left) of rear seats of the cabin<model with manual tipping mechanism>

Paint grease to two nylon plates.

Filling Grease Interval	Each 2,500km

Recommended Grease
Chassis Grease
NLGI No.2(lithium base grease)

Ambient temperature when starting engine

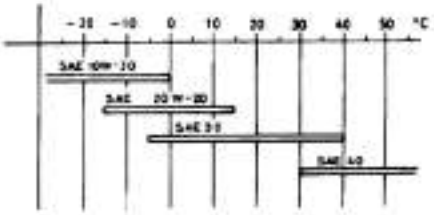

00733

Oil and Fluid

Note:

Contact with Hualing service station when disposing discarded engine oil, gear oil, clutch fluid or power steering fluid.

► Engine Oil

Since engine oil affects greatly on engine performance ,life and starting function, use recommended oil with stipulated grade and viscosity.

Check Time	Before vehicle dispatched
Replacement Interval	Each 10,000km

The first replacement shall be at the first 2,000~3,000km when new vehicle is running in.

Caution ⚠

Oil grading CF-4 can not be used (Engine used by API is out of classification.)

● Check

Caution ⚠

Check oil volume when vehicle is parking on an even ground and engine stops. Oil volume can not be measured correctly when vehicle is tilt or engine is running or engine just stops running. Measure oil volume after engine stops for 30 minutes.

1. Take out oil dipstick and clean oil with cloth.
2. Insert dipstick into crankcase completely and pull out slowly.
3. If oil adheres on dipstick in the required range, that is ok. If oil is not enough, refill some.
4. Insert the dipstick after checking.

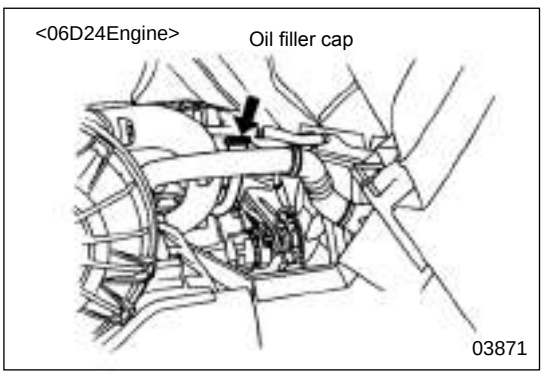

► Refill Oil

Warning ⚠

Not spill or overflow oil, or clean it. Fire might be caused with oil on exhaust manifold.

1. Tip the cabin.
2. Clean filler around to keep dust out.
3. Remove filler cap and refill oil with appropriate volume.
4. Check oil level with dipstick 6 minutes later after refilling and because if oil measured right after refilling and oil does not enter oil pan, oil measured will be less.
5. If oil level is too low, refill a necessary amount of oil. If oil level is too high, remove drain plug on the pan and let appropriate volume of oil out.
6. Reset filler cap.

Caution ⚠

Engine oil to be filled shall be the same grade and viscosity as that of being used.

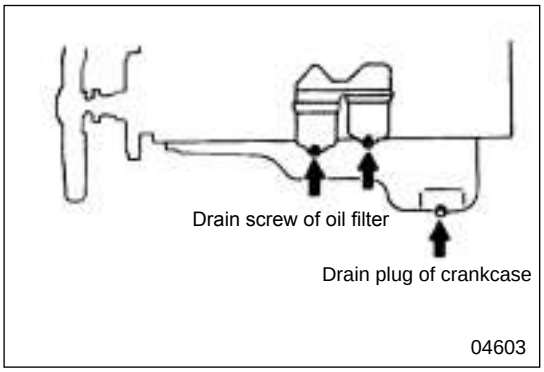

● Replace oil

Warning ⚠

● Be care of not being scalded by hot oil when draining oil since oil temperature is quite high as engine stops.

● Not spill or overflow oil, or clean it. Fire will be probably caused with oil on exhaust manifold.

1. Tip the cabin.
2. Clean filler around to keep dust out. Remove filler cap.
3. Put a container under drain screw of crankcase and oil filter to collect oil.

Note:

Stop engine and drain oil before oil becomes cold.

4. Remove drain screw of crankcase and oil filter and let oil out.
5. Reset plugs after oil is drained completely.

Tightening Torque	
Drain screw of crankcase	69Nm (7kgfm)
Drain screw of oil filter	20±4.9Nm(2±0.5kgfm)

6. Replace oil filter element.
7. Fill engine oil into filler slowly. Check oil level with dipstick 6 minutes later after refilling. (Because if oil is measured right after refilling and oil does not enter oil crankcase,oil measured will be less.)Reset cap after checking.
8. Rotate engine with starter and then start engine.
9. Run engine at idle speed to flow oil into all parts. Stop engine and re-measure oil volume after 30 minutes and check for oil leakage meanwhile.
10. Check if screw,cap of filler and dipstick are assembled.

Caution ⚠

Do not fill too much engine oil.

► Gear Oil of Transmission

Check Interval	Each 5,000km
Replacement Interval	Each 10,000km

The first replacement is at the time when new vehicle runs 2,000~3,000km.

Recommended oil:
Gear oil:
API uses antiwear gear oil of 85W/90 grading GL-4.

● Check

1. Remove test cock to check if gear oil is up to opening.
2. If not, refill oil through test cock hole until up to opening.

Caution ⚠

Use the same grade and viscosity of gear oil when refilling.

3. Secure to tighten the test cock.

Tightening torque of test cock
69±15Nm(7±1.5kgfm)

<Example: Mitsubishi Gear Box. Refer to the object for other model. >

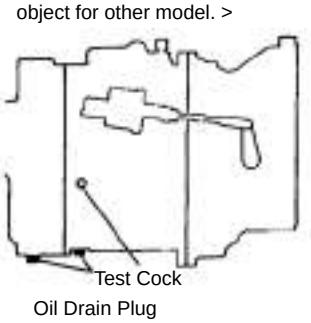

03881

● Replacement

Warning ⚠

Be careof not being scalded during draining gear oil since it is hot right after engine stopping.

1. Put a container under drain plug to collect gear oil.
2. Remove test cock and drain plug to drain gear oil.

Note:

Gear oil can be drained more quickly while gear oil is warm.

3. There is a magnet on drain plug. Remove iron dust on the magnet and reset drain plug.

Tightening torque of drain plug
69±15Nm(7±1.5kgfm)

4. Replace oil filter for transmission if there is oil cooler for transmission.
5. Fill gear oil to hole bottom through test cock hole.
6. Tighten test cock. Run engine temporarily to flow gear oil into oil cooler and oil filter if oil cooler for transmission is assembled. Moreover, stop engine, release test cock and fill gear oil up to the hole opening. Finally tighten test cock.

Tightening torque of test cock
69±15Nm(7±1.5kgfm)

► Differential gear oil

Check Interval	Each 5,000km
Replacement Interval	Each 10,000km

The first replacement is at the time when new vehicle runs2,000~3,000km.
Recommended Oil:

Gear Oil:
API uses antiwear gear oil of 85W/90 grading. GL-5.

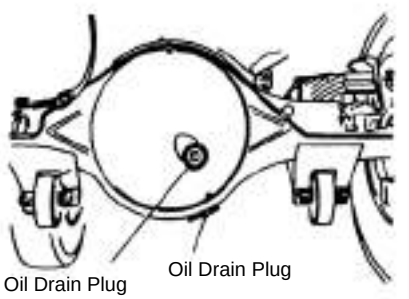

03884

● Check
1. Unscrew the test cock of differential housing and check oil level to see if it is up to hole opening.
2. Refill oil if it is not enough.

Caution ⚠

Refill gear oil of the same grade and viscosity as that of being used.

3. Secure test cock.

Tightening torque of test cock
110±10Nm(11±1kgfm)

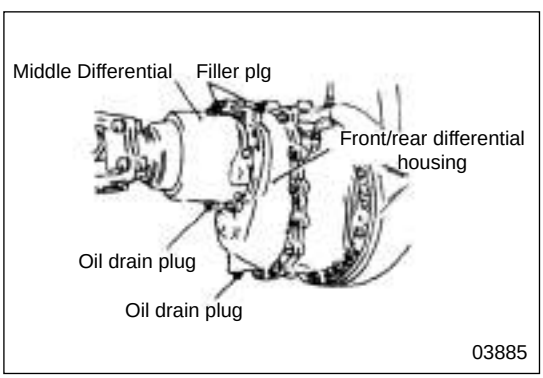

● Replacement

Warning ⚠

Be care of not being scalded by draining gear oil since it is hot right after engine stopping.

1. Put a container under drain plug to collect gear oil.
2. Remove test cock and drain plug and drain gear oil.

Note:

Gear oil can be drained more quickly while gear oil is warm.

3. Reset drain plug.

Tightening torque of drain plug
110±10Nm(11±1kgfm)

4. Fill gear oil to hole bottom through cock hole.
5. Secure test cock.

Tightening torque of test cock
110±10Nm(11±1kgfm)

6. Release drain plug and filler plug through differentials of front and rear axles and middle differential. Secure drain plug after draining oil, and then refill 1L of oil into differential housing and 0.5L into the middle differential through respective plug holes. Finally tighten respective plug.

Oil volume filled into axles:

457Axle

Differential: about 2L

Final reduction gear of middle axle: about 18L

Final reduction gear of rear axle: about 16L

STEYR Axle

Final reduction gear of middle axle: about 8L, respective wheel reduction gear: about 2L

Final reduction gear of rear axle: about 6L, respective wheel reduction gear: about 2L

435Axle

Differential: about 1L

Final reduction gear of middle axle: about 11L

Final reduction gear of rear axle: about 11L

Clutch fluid

Check Interval	Replacement Interval
Each 5,000km	Every 12-month

Please replace clutch fluid at the nearest Hualing service station.

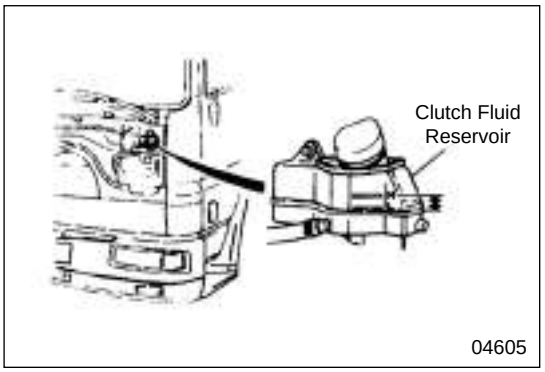

● Check

It is appropriate that the fluid level of clutch fluid tank is between “H”and “L”.

Inspect if there is any foreign matter in the tank. If any sediment is found in tank, clear it at the nearest Hualing service station.

Caution ⚠

Do not open tank cap when checking.

● Refill

1. Clean around fluid tank cap and open it if fluid level is below “L”.
2. Refill the appointed brake fluid between “H”and“L”.

► Power Steering Fluid

Check Interval	Each 5,000km
Replacement Interval	Replace power steering fluid every 12-month or each 50,000km (at either condi-tion).

● The first replacement is at the time when new vehicle runs 2,000~3,000km.

● Replace steering fluid at the nearest Hualing service station. Replace or clean filter element when replacing steering fluid.

Fluid recommended

Hualing Special power steering fluid

Caution ⚠

Refill power steering fluid of same quality used and never use the mixture, which probably will cause trouble.

● Check and Refill

1. Aim the front wheel at right in the front and stop engine on an even ground.

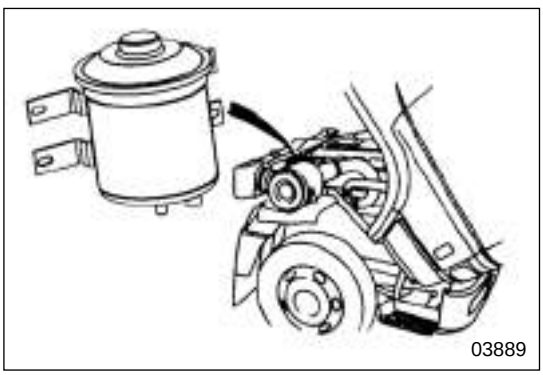

2. Tip cabin.
3. Remove cap, clean oil on the dipstick with dry cloth and recover the cap on the tank and check if oil level is within the required range.
4. If oil level is too low, clean around the tank cap, remove the cap and refill steering oil.
5. Secure the cap.
6. Lower the cabin.

Caution ⚠

- Use clean container while refilling power steering fluid. Never use container adhering gear oil. The foreign matter in the oil probably causes trouble.
- Oil shall not submerge the mark on the cap.
- Secure cap, otherwise power steering fluid would leak and cause fire. Clean spilled oil at once.
- Too low oil level means that oil is leaking. Check at the nearest Hualing service station.

Replacing and Cleaning of Filter Element

► Oil Filter

Replacement Interval	Each 10,000km

The first replacement is at the time when new vehicle runs2,000~3,000km.
<Except by-pass oil filter. >

Caution ⚠

- Oil filter can not be used again after cleaning. Replace with new filter.
- Replace oil filter element while replacing engine oil.
- Warning lamp lightening (orange) means filter element is blocked. Replace filter element at once regardless replacement duration. Buzzer buzzing means that oil pressure is too low.

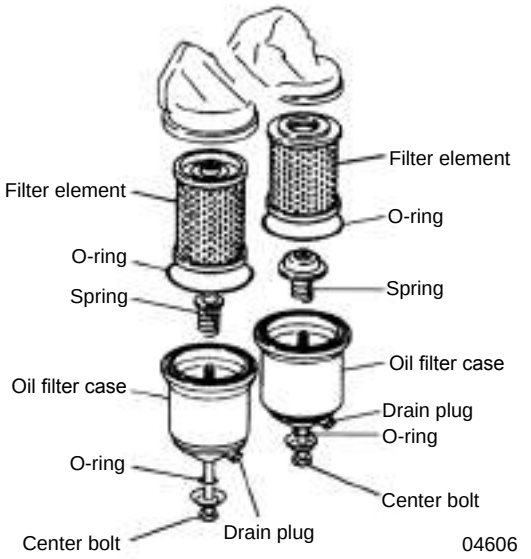

< Example:6D24engine, other engine refers to the object. >

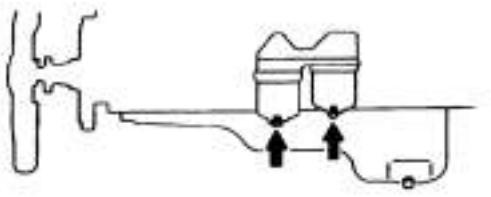

● Replacement

Warning ⚠

Do not spill oil while filling engine oil. Clean oil on exhaust manifold and other parts, otherwise fire will probably be cased.

1. Put a container under drain plug to collect oil.
2. Release drain plug and drain out oil.
3. Release center bolt and remove oil filter case, filter element, spring and other parts.
4. Clean parts except filter element in washing oil.
5. Replace filter element and O ring by quality parts of Hualing.
6. Reassemble all parts as original.

Tightening Torque	
Drain Plug	20±4.9Nm(2±0.5kgf)
Center Bolt	59~69Nm(6~7kgfm)

Assembling direction of oil filter varies with engine model. Ensure the appropriate drain plug position referring to engine illustration diagram.

Caution ⚠

Do not twist O ring, or it will be broken.

7. Refill 4~4.5dm^3 {4~4.5L} engine oil when replacing oil filter element instead of engine oil. Do not forget to check oil volume after replacing filter element.

8. Rotate crankshaft of engine with starter.
Start engine and check for oil leakage and then check oil volume after engine has been off for 30 minutes.

► Fuel Filter

Replacement Interval	Each 10,000km

Caution ⚠

Fuel filter element cannot be used again after cleaning.

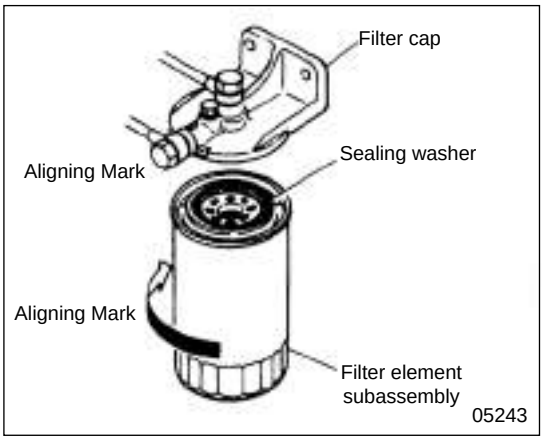

Warning ⚠

Clean spilt fuel and ensure no fuel leakage. Otherwise fire will probably be caused.

● Replace Centrifugal Filter

1. Tip Cabin.
2. Turn in the arrow direction and remove filter element assembly. Use wrench for difficult operation (may be bought from Hualing Automobile outlet or service station).
3. Replace filter element assembly with a new quality one of Hualing.
4. Paint a thin film of engine oil on sealing washer of attachment face of filter element subassembly . Put sealing washer on the sealing face of strainer cap and turn filter case slightly. Turn 1~11/8 circles.

Secure strainer cap to align the mark on the case to that of the outer circle of the subassembly (eight index lines).

Caution ⚠

Do not oversecure filter element or it will be damaged.

5. Discharge air in fuel system.
6. Start engine and check for fuel leakage.
7. Lower cabin.

► Replace and Clean Air cleaner

Clean Interval	Each 8000km or Dust Indicator Lamp Lightens.
Replacement Interval	Each 48,000km or cleaning 5 times

Clean air cleaner for the first time after new vehicle runs 5,000km.

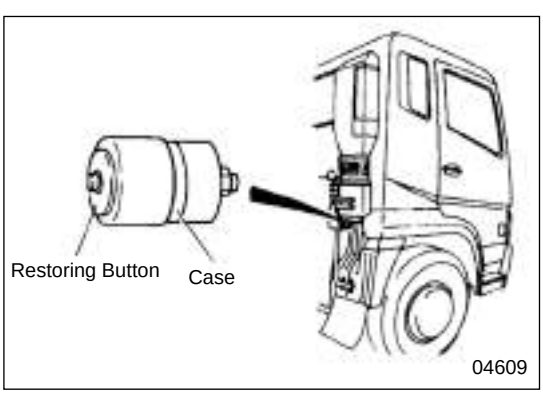

● Dust Indicator

Warning lamp lightens when element is blocked. Clean filter at once regardless of cleaning interval.

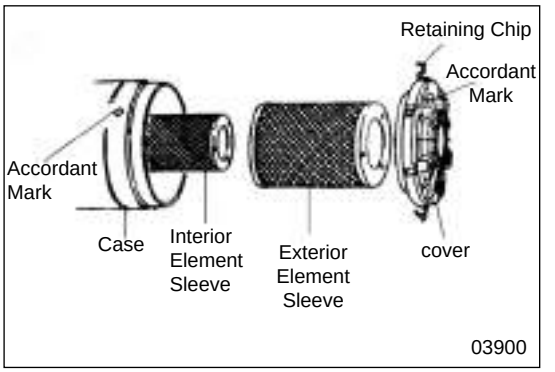

● Remove and assemble element

Caution ⚠

Do not clean element. Do not remove element subassembly when cleaning filter.

Note:

Replace inner element when replacing double elements.

1. Tip cabin.
2. Release retaining chip and remove the cover.
3. Pull out element while swaying slightly.
4. Push element until its end contacts with filter housing. Rest the cover to align cover to accordant mark on housing. Lock the cover with retaining chip.

Caution ⚠

Secure the element truly. Dust will probably be absorbed into engine when sealing washer is damaged or retaining chip loosed, which is the preliminary wearing cause to piston or cylinder bush.

● Clean Filter- paper Type Element

Warning ⚠

Wear dust cover for preventing dust from inbreathing when cleaning filter-paper type element. Absorb dust around by dust catcher.

1. Clean adhering dust by blowing compressed air along paper folding lines on interior element.

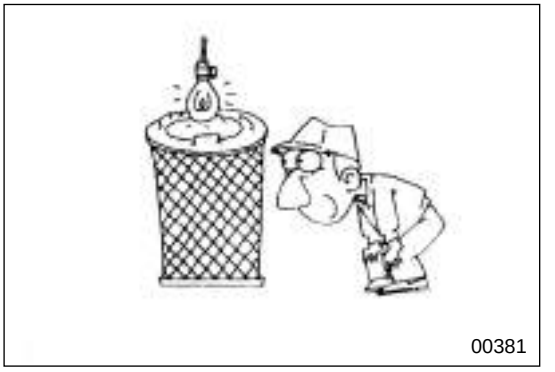

Caution ⚠

● Compressed air pressure: below 500kPa {5kgf/cm^2}.

● Do not beat or knock the element.

● Replace with new element if it is adhered with oil smog or carbon black regardless of clean duration.

2. Put a lamp bulb inside element to check paper for damage or attenuation. Check sealing washer for damage.
3. Clean inner housing with cloth.

► Strainer of Fuel Supply Pump

Clean Interval	Each 10,000km

Warning ⚠

Clean spilt fuel and ensure no fuel leakage, otherwise fire will be caused probably.

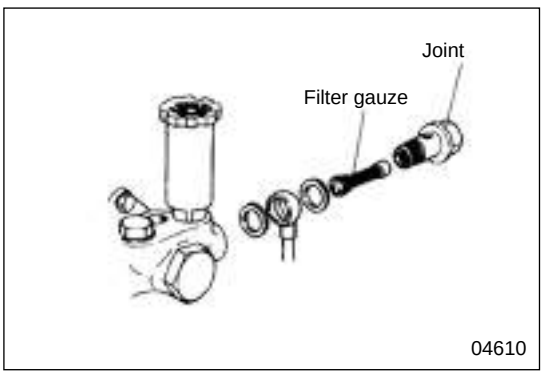

● Clean

1. Tip cabin.
2. Separate joint from feed inlet of fuel supply pump.
3. Remove filter gauze from joint by turning counter-clockwise.
4. Wash filter gauze in diesel.
5. Reset filter gauze and joint with reversed sequence of separating.
6. Exhaust air from the fuel system.
7. Start engine to check for leakage.
8. Lower the cabin.

► Oil Filter of Transmission <For vehicle with oil cooler of transmission. >

Replacement Interval	Each 10,000km

Caution ⚠

● Oil filter of transmission can not be used again after being cleaned.

● Replace transmission oil while replacing oil filter of transmission.

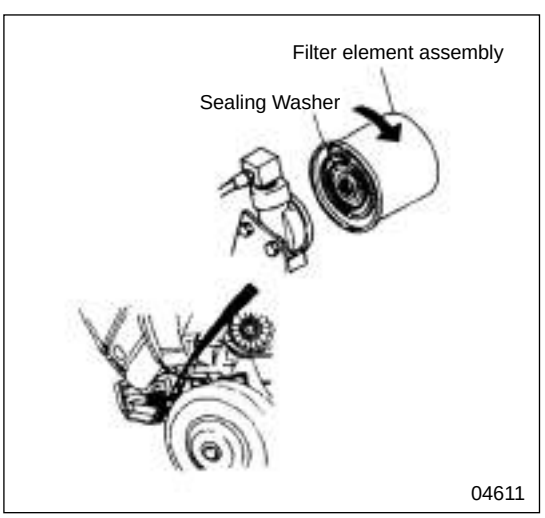

● Replacement

1. Tip cabin and put a container under oil filter of transmission.
2. Unscrew the element assembly in the direction shown as figure. Use a wrench of 27mm at hexagonal part at the end.
3. Replace with new qualified element of Hualing.
4. Paint a thin film of gear oil on sealing washer of fitting surface of element assembly and secure element assembly with hands.
5. Start engine to check for leakage.
6. Lower the cabin.

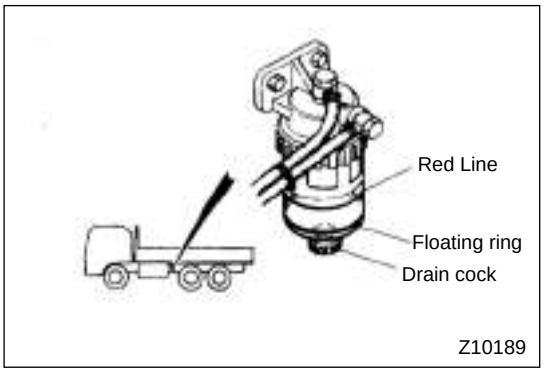

Draining Seeper from Water Separator

Check Interval	Every Week

Drain seeper in water separator immediately. Separation effect will lose if floating line is above red line. Loosen drain cock and drain water out before floating ring reaches red line. After then, tighten drain cock.

Engine Coolant——Check and Replacement

► Additive in Coolant

Engine coolant for anti-rust and freeze does not need to be replaced within 24 months.

Caution ⚠

Water is not allowed to fill in engine, or engine life would be shortened.

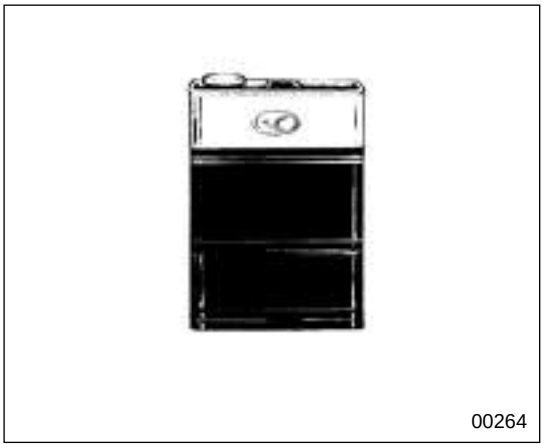

Danger ⚠

- Do not drink Hualing diesel coolant since it is poisonous. If drink by accident, imitate to vomit and ask doctor's help. Wash mouth with water completely if the mouth is polluted.

If coolant enters eye,wash it with clean water at least for 15 minutes. If it still remains irritation, ask the doctor for treatment.

Wash with buck completely if coolant is spilt on skin and then paint ointment.

- Keep it away from children.
- Smoking and fire is prohibited since coolant is flammable.

Caution ⚠

Do not mix with other antifreeze, antirust or durable coolant.

Clean cooling system before filling other durable coolant or long acting coolant of Hualing diesel engine.
Refer to indication for refilling coolant.

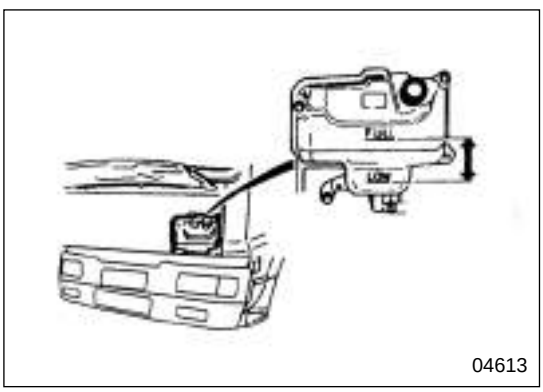

► Check

Check Interval	Before vehicle being dispatched and each 5,000km

1. Open front grill.

2. Coolant level shall be between marks FULL and LOW.

3. Check radiator and hose for leakage. Dripping trace being found on ground means water leakage after vehicle stops.

4. Close front grill and ensure that grill is locked.

Caution ⚠

Check coolant before starting engine and coolant temperature increasing.

04614


04639

► Refilling Coolant

1. Refill coolant up to level FULL mark when level is below mark LOW.
2. Secure tank cap after refilling.

Warning lamp lightening means insufficient coolant or overheat engine. If coolant is not enough, coolant in expansion tank must be not enough, either. Remove pressure cap and refill coolant into expansion tank up to filler neck. Reset cap and refill coolant into water tank.

Warning ⚠

Open pressure cap after coolant temperature drops completely, or scald would be caused.

Caution ⚠

● Generally, refill coolant into water tank, the pressure cap is seldom opened.

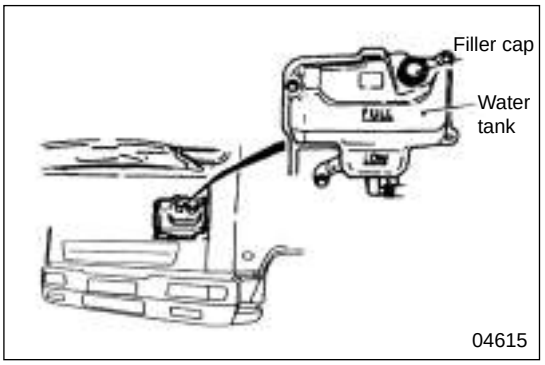

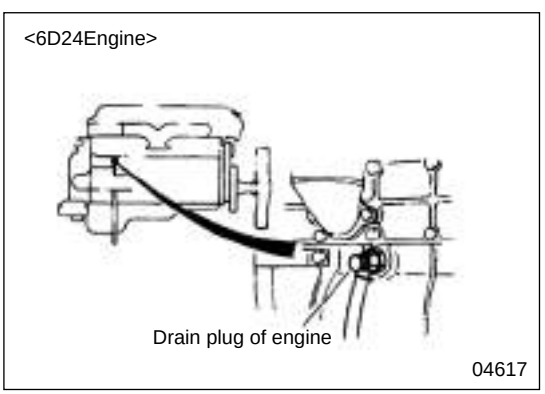

Note:

Contact Hualing service station when discarding waste coolant.

1. Open the front grill and remove filler cap from water tank.
2. Tip cabin, remove pressure cap of radiator.
3. Unscrew drain plugs of engine, radiator and radiator hose and drain off coolant. Drain off coolant from water tank.
4. Secure drain plugs after water drained off.

Tightening Torque	
Drain plug of engine	7Nm (0.7kgfm)
Drain plug of radiator	2Nm (0.2kgfm)

5. Clean cooling system. Start engine after filling soft water (warm water is better) through expansion of radiator. Run engine at medium speed until temperature exceeds 90℃ and continue to run engine for 10 minutes. Stop engine and drain off coolant. Be careful that coolant temperature is quite high. Keep cleaning operation until drained water is transparent.

Caution ⚠

Check the coolant if it is seriously polluted at the nearest Hualing service station.

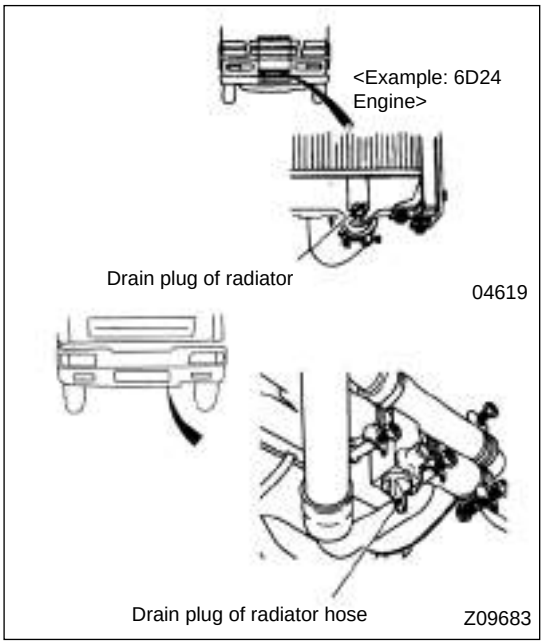

6. Refill coolant a bit lower than the opening through the filler of expansion tank. If refilled coolant up to opening, coolant will overflow from expansion tank due to temperature increasing when start engine.
7. Open radiator pressure cap, run engine and exhaust air from cooling system.
8. Stop engine and refill coolant, if necessary.
9. Tighten pressure cap.
10. Lower cabin.
11. Refill coolant up to level FULL and secure water tank cap.
12. Run engine temporarily to check for water leakage.
13. Check coolant in water tank if liquid level is between FULL and LOW. Refill if coolant is insufficient.
14. Close the front grill and insure front grill is locked well.
15. Clean radiator section. Radiator shall be cleaned regularly since dust or dirt attaching on the front will probably decrease cooling performance and cause rust.

Belt——Check and Adjustment

Adjust tension of belt regularly since too loose or too tight of the belt would cause abnormal charging of battery and troubles of alternator and water pump.

Check Interval	Before vehicle being dispatched and each5,000km.

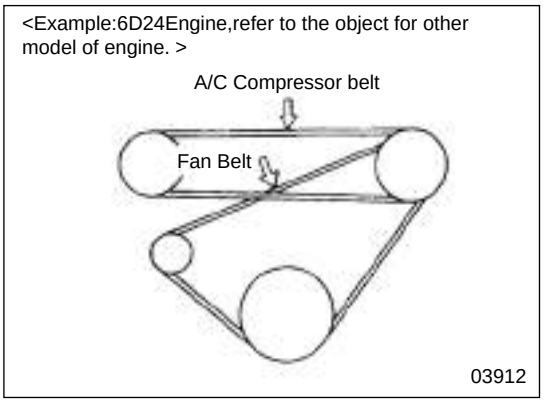

Caution ⚠

Do not adhere lubricant or grease on belt when checking and adjusting.

► Check

1. Tip cabin.
2. Press the middle of belt (with force of about 98Nm {10kgf}) to check bend of the belt.
3. Adjust tension of belt if bend degree is not within required range.
4. In addition, check for belt damage.

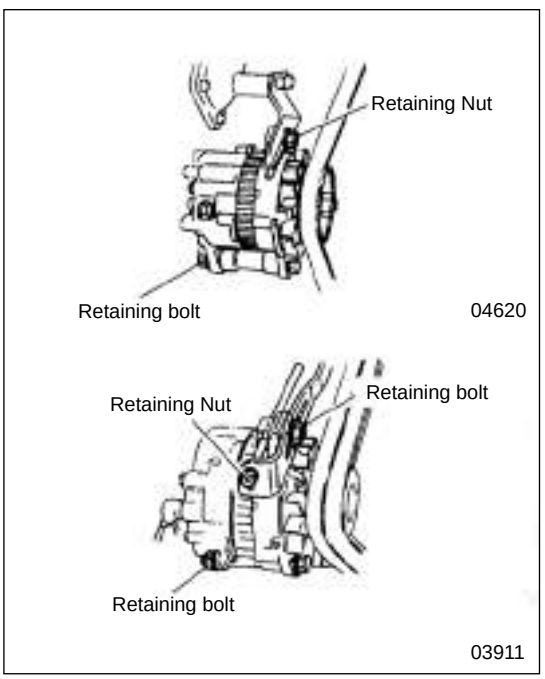

► Adjustment

Warning ⚠

Adjust belt tension when engine stops.

● Fan Belt

1. Slightly unscrew upper/lower retaining nuts or bolts of alternator.
2. Taking wrench handle as lever, adjust fan belt tension by moving mounting position of alternator. Turn adjusting bolt (if have) to adjust belt tension. (Turn bolt clockwise to increase tension).
3. Secure upper/lower bolts or nuts of alternator.
4. Lower the cabin.

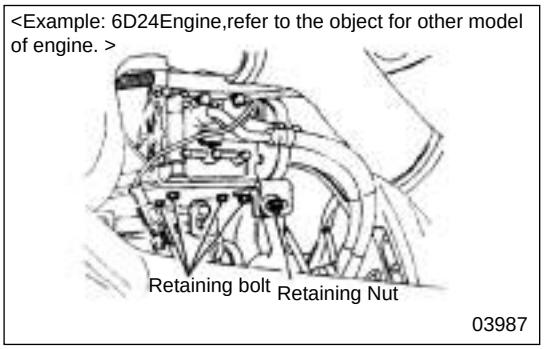

● A/C Compressor Belt

1. Unscrew slightly retaining blot or nut.
2. Turn adjusting nuts or bolts to adjust belt tension.
3. Secure adjusting nuts or bolts.
4. Lower the cabin.

Steering Wheel——Check

Check Interval	Before vehicle being dispatched and each 5,000km.

Check wheel at the nearest service station if any abnormality is found.

► Idle running distance of steering wheel

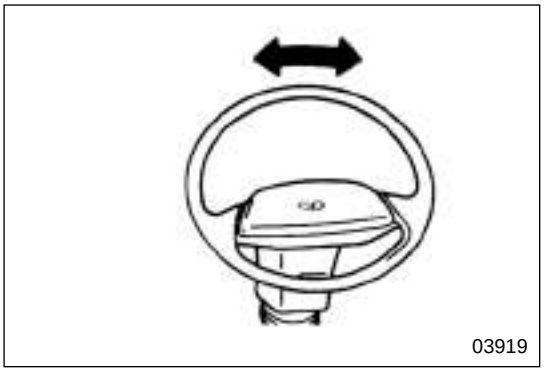

1. Start engine and run it at idle speed.
2. Adjust front wheel to line driving position.
3. Turn steering wheel right and left until resistance is felt. Distance between resistances of right and left turnings is idle running distance of wheel.

idle running distance of wheel	15~35mm

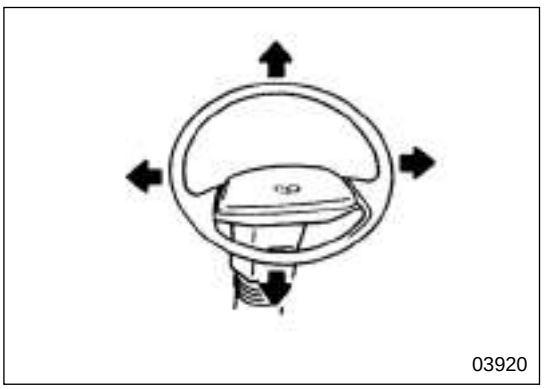

► Wheel Relaxation

Shake wheel up and down and right and left to check for abnormal relaxation.

► Steering System Performance

Warning ⚠

Check steering wheel performance at spacious place and pay much attention to ambience.

Check steering system reaction to operation of steering wheel at low speed (at about 10km/h)at safe place. Check steering wheel for abnormal shimmy, bias to one direction, operation lagging or if it can return to direct driving line without hand controlling.

Foot Brake——Check

Check Interval	Before vehicle being dispatched and each 5,000km.

Check at the nearest Hualing service station if any abnormality is found.

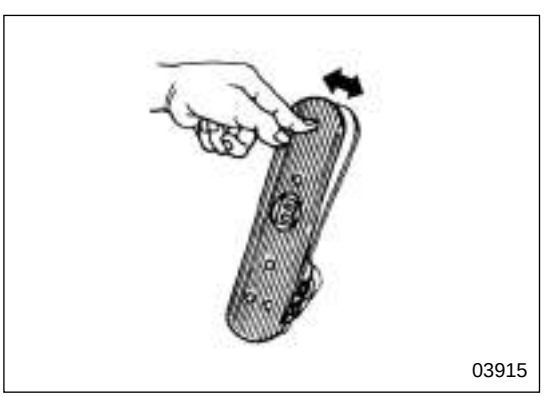

► Idle Running Distance of Brake Pedal

Press brake pedal with hand until resistance is felt. Measure the distance that is pushed down at pedal end and that is idle running distance of brake pedal.

Idle Running Distance of Brake Pedal	10.0~15.5mm(at pedal end)

Check brake system at the nearest Hualing service station if pedal clearance is not within the standard range.

► Exhaust from Brake Valve

Step on brake pedal and release to check if exhausting sound is heard. Check if pedal resets original position smoothly.

► Brake Performance

Warning ⚠

Test brake performance at a spacious place and pay much attention to ambient safety.

Check if brake is normal and if pulling to one side at braking when driving on safe ground at low speed, after confirming that ( ) alarm lamp is off.

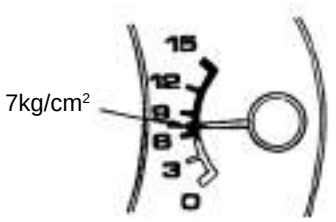

03208

Increase of Air Pressure

Check Interval	Before vehicle being dispatched and each 5,000km.

1. Impose manual brake and stop engine.
2. Open drain valve to exhaust all compressed air from air tank.
3. Start engine and run it at idle speed. Measure needed time of air pressure increasing from 0 up to 7kg/cm². Stipulated time is as following:

Air pressure increasing from 0 up to 7kg/cm².	
Needed Time	About within10 minutes.

If pressure can not be increased in stipulated time or longer time is needed, that means there is trouble for brake system. Check it at the nearest Hualing service station.

Note:

The operation should be carried out after trailer being seperated if it is tractor.

Air Dryer——Check and Replacement

Check Interval	Before vehicle being dispatched and each 5,000km.
Overhaul	Every 12-month
Replacement of Air Dryer	Every 12-month or each 50,000km.

Note:

There is drier,which is used to absorb moisture from the compressed air, in air dryer.

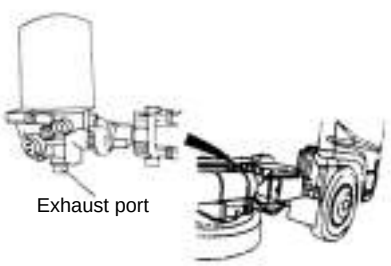

04623

► Check

Open drain valve of air tank. Replace drier if a lot of water draining out.

If abnormal volume of oil is found in seeper from exhaust opening of air dryer, check vehicle at the nearest Hualing service station.

► Overhaul and Drier Replacement

As some parts shall be removed when replacing drier ,please go to the nearest Hualing service station.

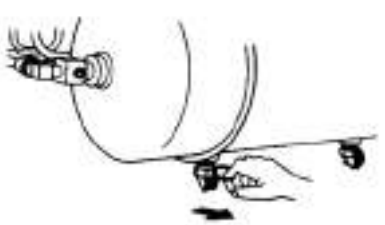

03202

Air Tank——Check

Check Interval	Before vehicle being dispatched and each 5,000km.

Open drain valve to exhaust all compressed air from air tank.

Note:

Normally, there is no water found if air dryer is assembled. A bit of water is found if air temperature of air tank is below 16℃. (This phenomena will be found when vehicle is parked at the daytime of the first day and drain valve is opened the next morning.)

Manual brake——Check

Check vehicle at the nearest Hualing service station if any abnormality is found.

Check Interval	Before vehicle being dispatched and each 5,000km.

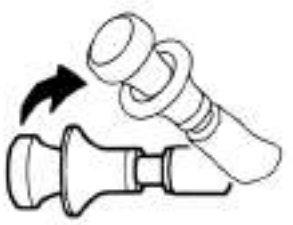

Z10077

► Manual Brake Operation

It is normal that air exhausting sound is heard while pulling brake handle. Check parking brake handle for lockage.

► Brake Performance

Warning ⚠

Test brake performance at a spacious place and pay much attention to ambience.

Park and pull brake handle on a dry slope to check if vehicle can be parked here. Check brake performance by pulling handle when driving at low speed without slope.

Clutch——Check

Check Interval	Each 5,000km

03921

► Idle Running Distance of Clutch Pedal

Idle Running Distance of Clutch Pedal	38~53mm

► Clutch Performance

Step on clutch pedal to check for abnormal sound or resistant force. In addition, check if it is very easy to shift gear when stepping on the pedal. Release pedal slowly to check if it skids or links smoothly. Check vehicle at the nearest Hualing service station if any abnormality is found.

Note:

- Idle running distance of clutch pedal will become shorter if friction disc is worn.
- If idle running distance of clutch pedal is not within stipulated range, the vehicle will skid and can not run.

04625

Discharge of Sediment from Fuel Tank

Check Interval	Each 15,000km

Remove oil drain screw from fuel tank and discharge sediment from tank.

Tyre —— Check

Check Interval	Before vehicle being dispatched and each 5,000km

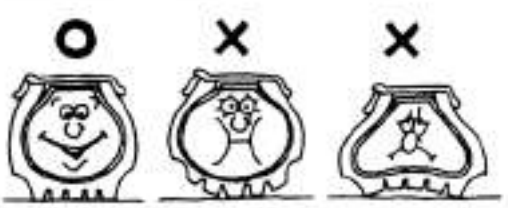

Appropriate tyre pressure | Over high tyre pressure | Over low tyre pressure

04685

► Tyre pressure – Visual check

Observe the state of tyre contacting ground, estimate whether the tyre pressure is normal and measure the pressure exactly with tyre pressure gauge.

► Tyre pressure – measured with tyre pressure gauge

Measure tyre pressure by barometer at low tyre temperature. After checking and adjustment of tyre pressure, ensure to secure the tyre valve.

03945

Warning ⚠

- Discomfort to passenger and damage to goods shall be caused when the tyre pressure is too high or too low. Especially when the pressure is too low, overheat shall happen which would lead to tyre crack.
- The inside and outside tyre of dual tyre should be of same pressure.
- Tyre pressure needs not to be increased while driving at a high speed.

Standard tyre pressure(kPa(kgf/cm²)	
11.00-20-16PR	Front tyre:810{8.10} Rear tyre:740{7.40}

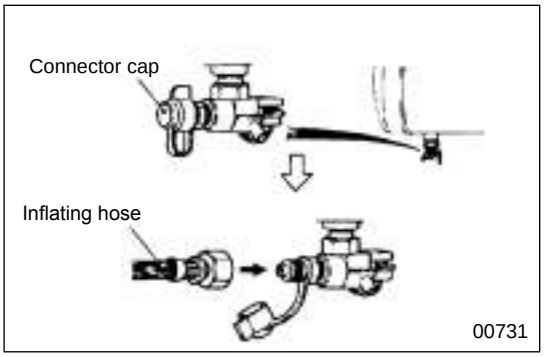

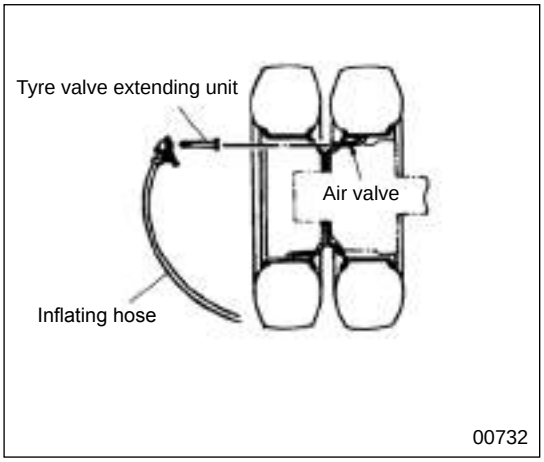

► Tyre Inflation Unit

If the tyre pressure is low, inflate the tyre with compressed air through brake system.

1. Remove connnector cap from connector on the air tank.
2. Connect tyre inflating hose with connector (driver's tools).
3. Remove cap from tyre air valve, connect the other end of inflating hose with valve to fill compressed air into tyre.
4. Remove tyre inflating hose and reset cap after inflating.

Inflate the inboard tyre of dual tyre

1. Remove the cap from the valve of inboard tyre and assemble tyre valve extending unit.
2. Connect tyre valve extending unit to inflating hose.
3. Do other steps the same as that of single tyre .

Caution ⚠

Never use tyre inflating hose for other purpose except inflating tyre.

► Tyre pattern depth

Check for insufficient tyre pattern depth

Tyre pattern depth	above 1.6mm

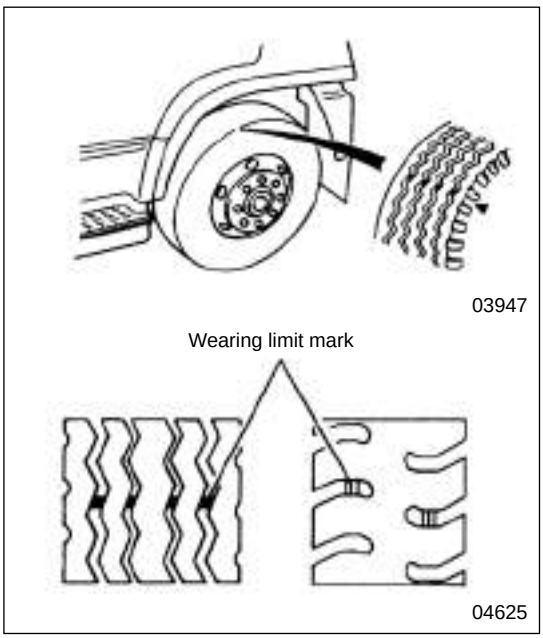

While tyre pattern depth decreased, wearing limit mark will appear on the tread corresponding to mark??.

Once wearing limit mark appears on the tyre, it is extremely dangerous. Replace with new tyre at once.

Caution ⚠

In case of tyre pattern depth insufficient, tyre skids or water floats will be caused at high-speed as raining. In this condition, the wheel loses control of turning and braking as tyre floating on water.

General Knowledge

- Choose lateral pattern tyre if greatly concern traction.
- Choose vertical pattern tyre if greatly concern driving stability.

► Check tyre for crack, damage or odd stuff embedded.

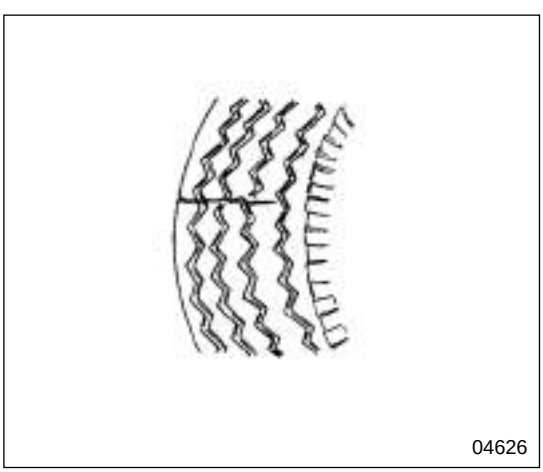

Check footprint and side of tyres for crackles, damages, and bad or abnormal wearing areas of tyre tread or flank. And also check for metal sheets or nails stucking into tyre, as well as carpolite stucking between dual tyres.

Tyre——Replacement

Note:

Once discard useless tyre, please contact with tyre dealer or Hualing service station.

► Preparation before tyre replacement

1. Park on flat and firm ground, and ensure to pull the manual brake handle and then set gear at neutral position.
2. Once replace broken tyre, please choose a safe field which would not block traffic and then turn on emergency indicator light and use caution triangle for other drivers' attention.
3. Let passengers get off the vehicle.
4. To replace the broken tyre, place a stop block to the diagonal tyre. For example, put a stop block under front/left tyre when replacing rear /right tyre.
5. Remove spare tyre.

► Using Jack

Warning ⚠

- Do not creep under vehicle while using jack as it is extremely dangerous if jack drops.
- Do not lift vehicle on slope or soft ground, otherwise, vehicle may fall due to tilting or sliding of jack.
- Do not over lift vehicle body.

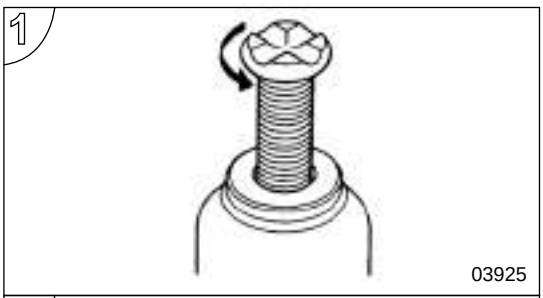

● Lifting vehicle

1. If lift position is too high, please screw counterclockwise and elongate jack head.

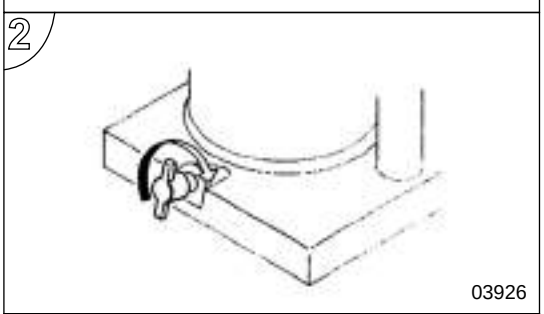

2. Secure release valve clockwise.

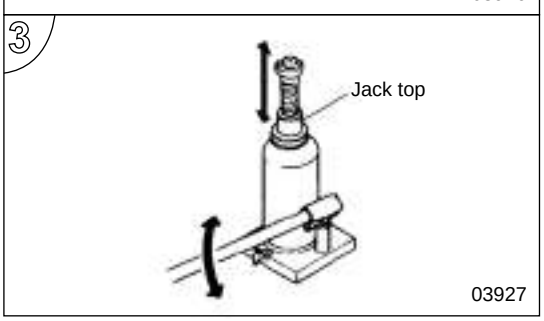

3. Insert socket spanner handle into jack sleeve (driver's tools), press handle upwards and downwards to protrude jack head and vehicle body will be lifted.

● Lower vehicle body

Warning ⚠

Screw release valve slowly to lower vehicle body. If screw hastily, the body will fall rapidly and jack will also slid.

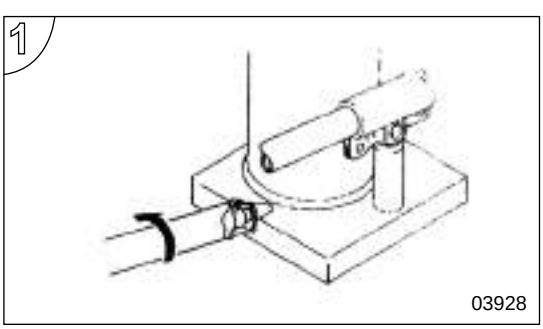

1. Screw release valve counterclockwise with spanner handle to retract jack due to vehicle weight.

Caution ⚠

● Do not screw release valve more than two turns.

● Do not stop release valve suddenly while vehicle descending, otherwise jack will be damaged.

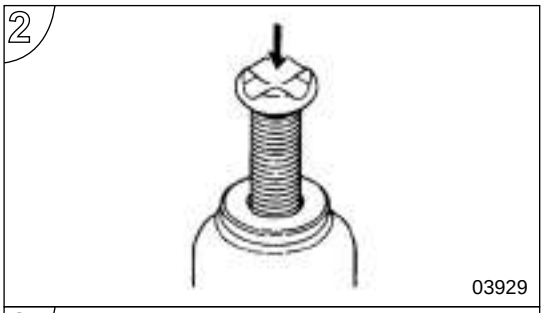

2. Remove jack from vehicle and push and retract jack head.

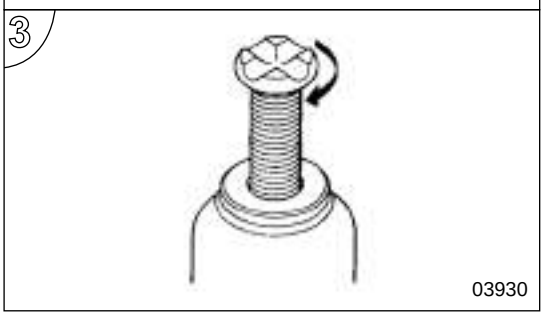

3. Screw release valve clockwise and jack head counterclockwise to retract it back

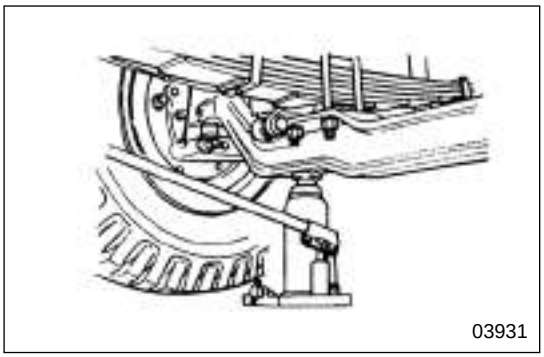

► Lifting position

● Front wheel

● Put jack at appropriate position under front axle indicated in illustration to lift front wheel.

● It might be difficult to put jack on the stipulated lifting position when front tyre is exploded. In this way, lift vehicle body as Page 12-58 indicated.

● Rear wheel

Single rear axle

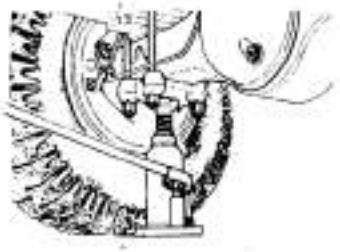

03933

Double rear axles

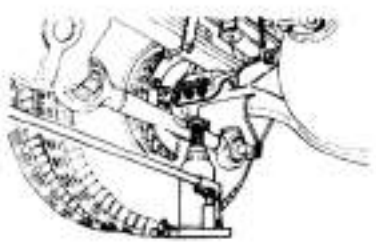

03934

Put jack at appropriate position under rear axle as indicated in illustration.

Warning ⚠

Put jack under rear axle to lift rear wheel. Never put it under propelling rod or other parts.

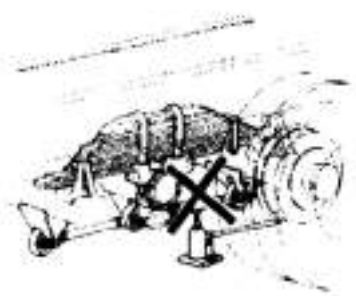

03937

● Front wheel lifting method once tyre exploded. Lift vehicle with wood block if tyre exploded and jack could not be put on the stipulated position.

Required wood block thickness	above 270mm

Warning ⚠

- Use the widest wood block to increase lifting stability of vehicle.
- Please pay attention to the bent of the leaf spring while lifting vehicle.

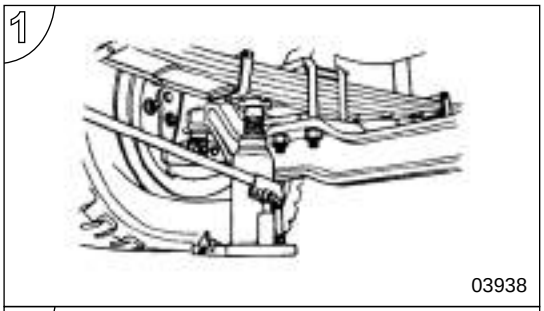

1. Try to put jack under leaf spring and near front axle and then lift vehicle body.

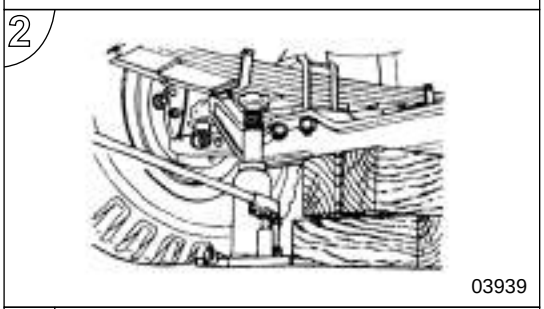

2. Put wood block under front axle.

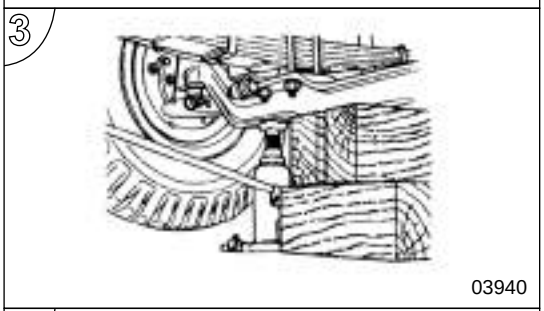

3. Retract jack head and then Check whether the vehicle body lands on wood block steadily. Make sure it is safe and then move jack to the normal lifting position (below front axle).

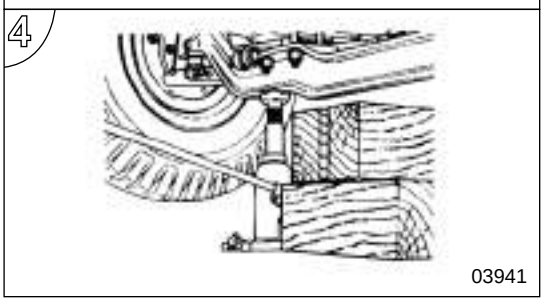

4. Lift vehicle further until wheel can be replaced.

► Removing Tyre

Warning ⚠

- Do not creep under vehicle while using jack as it is extremely dangerous in case jack drops.
- Ensure jack props up at normal position. Otherwise, it will cause great accident once jack fails.
- Do not keep jack propping up for a long time. Prop vehicle with frame bracket stably, if necessary.

Caution ⚠

- Please unload heavy cargo from vehicle before lifting.
- Jack must be put at the stipulated position to lift vehicle. Otherwise, it will cause great damage for vehicle and person, etc.

1. Put jack at stipulated position and lift vehicle to the height where wheel is about to be away from the ground.
Recheck the jack position at this position.
2. Loosen wheel nuts a little.

Warning ⚠

Socket spanner must buckle the wheel nuts sufficiently. Otherwise buckle failure will cause great danger.

Just loosen wheel nuts a little but not need to remove them while using socket spanner and spanner handle (driver's tools).
Loosen wheel nuts as arrow indicates in figure.

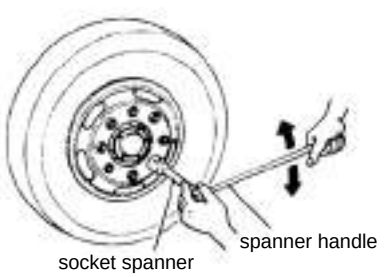

04627

3. Lift vehicle to the height where wheel is about to be away from the ground.
4. Release wheel nuts and then remove tyre.
5. Remove rear wheel of dual tyre, methods are as following:

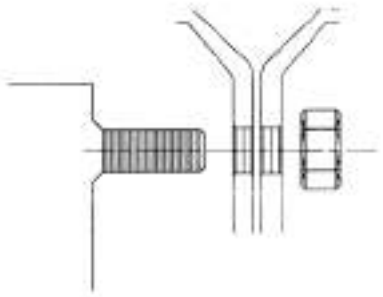

Z09612

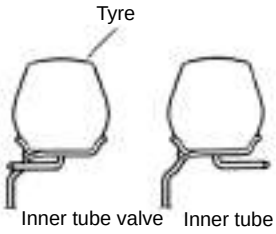

Right way to assemble Wrong way to assemble

Z10189

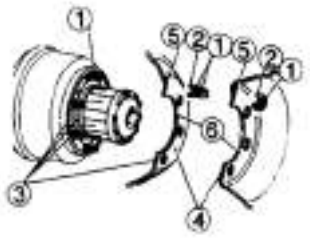

00459

► Assembling Tyre

Warning ⚠

- Replace with new ones if screwed parts of wheel bolts or nuts damage, spoke deforms , cracks or is overly worn; otherwise, nut looseness will cause tyre dropping.
- Do not paint the attachment face of spoke and wheel hub as well as supporting surface of wheel nuts again. Paint too much will cause nuts looseness and tyre dropping. If it is painted too much, please clean the painting with steel wire brush and assemble every part back.
- Please make non-return air valve expose to spoke side while assembling tyre onto spoke.

1. Please clean following parts before assembling tyre.
If following parts are dirty, looseness of nuts will be caused.
① wheel bolts and screw thread
② supporting surface of wheel nuts
③ attachment face of wheel rim
④ anastomosing face of wheel rim
⑤ surface of nuts on wheel rim
⑥ inner side of tyre rim

2. Please paint following parts with thin film of chassis lubricant, tyre bearing lubricant or engine oil.

Warning ⚠

Do not use lubricant containing molybdenum disulfide.

3. Align wheel bolt to tyre rim keyhole and then secure wheel nut until it holds tyre rim.

Warning ⚠

Do not damage screw thread of tyre bolt while assembling tyre.

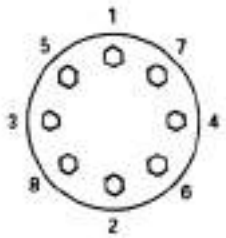

04904

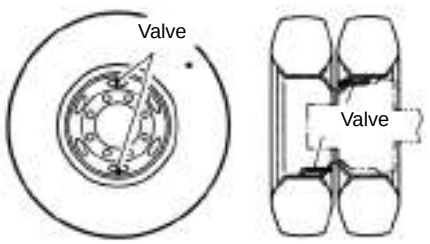

Z10190

4. Lower vehicle body slowly until tyre contacts with ground.

5. Secure in sequence illustrated in figure for 2 or 3 times,and then tighten it with rated torque.
Tightening torque also can be estimated by method in page 12~64 without torque spanner.
6. Please stagger non-return valve of interior and exterior tyres to 180° while assembling the rear wheel of dual tyre.
● Assemble inboard tyre first and then lift vehicle body again and assemble outboard tyre in same way.
● If only replace outboard tyre, please secure inboard wheel nuts with stipulated tightening torque and then assemble it.

Warning ⚠

● Tighten wheel nuts by standard torque.It will cause bolt elongation or tyre rim inosculation face distortion if secure too tightly.
● Pay more attention not to damage wheel bolt and screw thread of inboard wheel nuts.
● Please tighten and fix the wheel nuts again by normal torque after driving 50~100km because tyre looseness would be caused by initial run-in. Later on, tighten and fix them regularly.

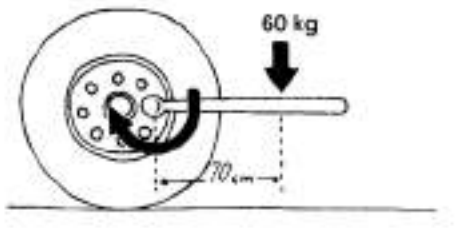

02072

► How to estimate rough torque without torque spanner?

It is better to use torque spanner to secure wheel nuts. But torque can be estimated even without torque spanner by following method:

Force 590N {60kgfm} weight on position 70cm away from wheel nut and torque 410N {42kgfm} is resulted.

Formula: 0.7m×590N=413Nm

Wheel Nut —— Check and Tightening

Check Interval	Per 5,000km

Warning ⚠

Please tighten and fix the tyre for the first time after driving 50~100km because tyre looseness would be caused by initial run-in.

Check wheel nuts with torque spanner and then tighten and fix if necessary.

Tightening torque of wheel nuts
400~440Nm{41~45kgfm}

Warning ⚠

Pay more attention to looseness of wheel nuts, which will cause wheel bolt broken, tyre rim cracked and tyre dropped.

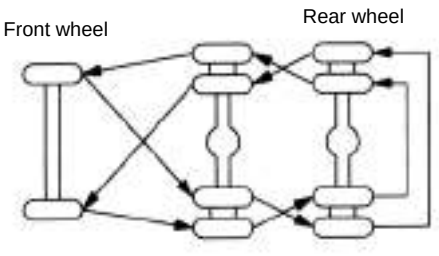

Z10270

Tyre Transposition

Tyre wearing varies with tyre installing position. Tyres should be trans-positioned for equal wearing to elongate tyre life.

Tyre transposition intervals	Per 10,000km

► Tyre transposition criterion

Please use tyres with same size, tyre pattern and cord layer. Otherwise, vehicle or steering wheel will be staggering during vehicle braking.

1. Trans-position the tyres as indicated in figure.
2. Repeat as following orders:

Warning ⚠

Do not use the bias tyre and the radial-ply tyre at the same time. Otherwise, the stability of controlling will be influenced.

Caution ⚠

● Front tyre is easy to be heated and wearing rapidly, so please install double tyres on front wheel which loaded less. Check tyre pressure after 200km run-in driving below 60km/h.

● Check for diameter difference between double tyres. Install the tyres of small diameter inboard if necessary..

Tightening torque of wheel screw cap	
radial-ply tyre	below 8N.m
bias tyre	below 12N.m

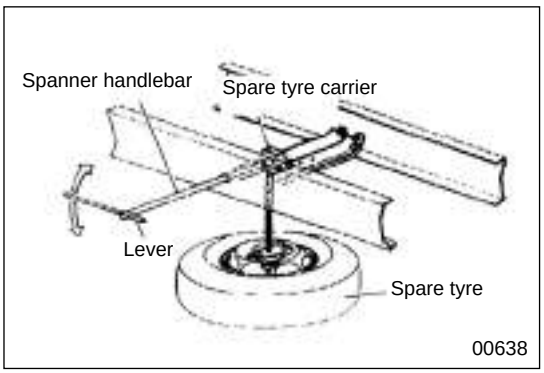

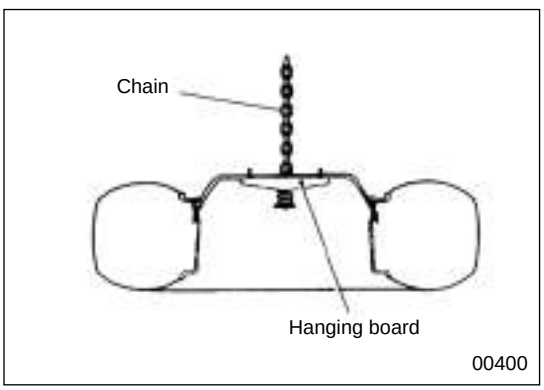

Spare Tyre —— Disassembly & Assembly

Please set spare tyre with slight high pressure as it will blow a little naturally.

►Disassembling for use

Insert spanner handle with lever into spare tyre bracket. Screw counterclockwise to lower spare tyre.

►Reassembling

Warning ⚠

Sometimes, spare tyre assembled in a state of swing will probably drop whiling driving. If it is difficult to fix, please put it back to cargo body and try to ask Hualing Automobile service station for help.

1. Put convex surface of tyre rim upwards and ensure to insert it into hanging board as figure indicates.
2. Wind clockwise spare tyre elevating handle to lift up spare tyre. Please check chain for distortion and hanging board for declining and curling. If roll up the distorted chain, it will loosen while driving.
3. After rolling up completely, please wind spare tyre elevating handle with power 30kg to avoid overturning of handle to pull out the spare tyre elevating handle.
4. Kick spare tyre. if it is rocking, please inspect the hanging board and tyre rim and fix it again. If it is till rocking, please remove spare tyre otherwise it will drop while driving.

Caution ⚠

Over tighten the tyre carrier will cause damage.

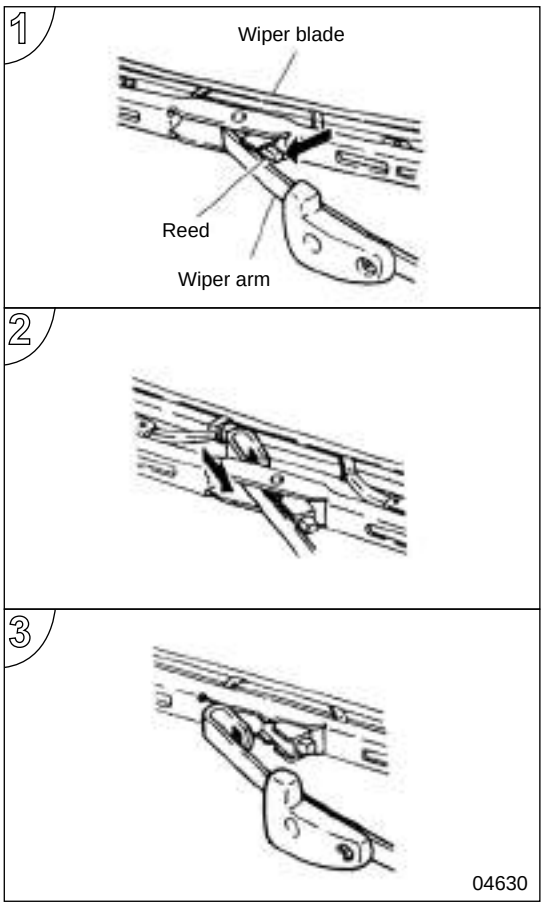

Wiper Blade—Replacement

► Replacing the Wiper Blade

1. Set the wiper arm up and push the reed as arrow indicates.

2. Push the wiper blade into the side of wiper arm.

3. Separate wiper arm from wiper blade and replace with new blade, which should be spare parts of Hualing Automobile.

Caution ⚠

● Do not push the disassembled wiper blade back into the wiper arm or move wiper,otherwise, windshield would be damaged.

● Never move wiper when setting up arm;otherwise,it would be damaged.

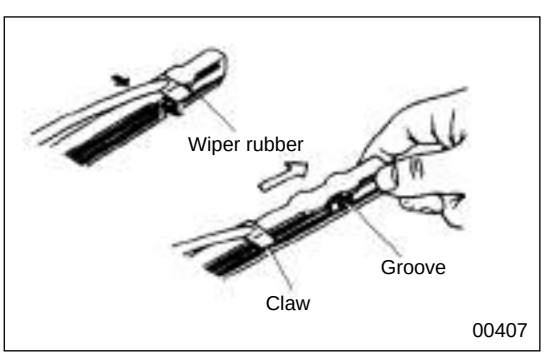

► Only replacing wiper blade rubber

1. Set the wiper arm up.
Press both sides (black arrow in illustration) of wiper rubber and draw the rubber to pull the claw out of groove.

2. Draw the rubber of wiper blade out.

3. Replace with new rubber parts of wiper, which should be quality parts of Hualing Automobile. Assemble it in reverse sequence of disassembly. Insert the claw into groove for sure.

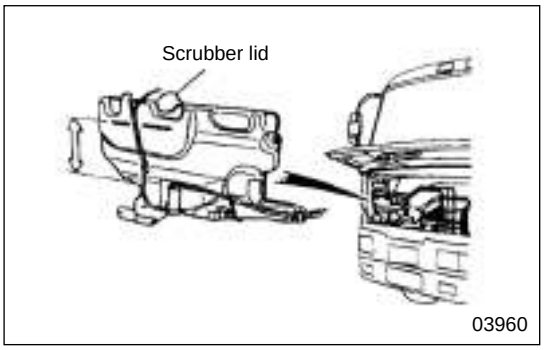

Windshield Spraying Washer ——Volume Check

Check the liquid volume in spraying washer, screw off the lid and refill with washing liquid if the liquid is insufficient.

Caution ⚠

Do not use suds instead of special washing liquid otherwise that will cause nozzle blockage and paint discoloration.

Note

Wash liquid of high concentration shall be used to prevent from freezing in frigid winter.

washing tank capacity	$6dm^3${6L}

Battery——Check

Check Interval	per 5,000km

Warnings ⚠

- No fireworks or spark around the battery due to its flammable hydrogen.
- Keep battery in right place to prevent children from toying with. Once battery liquid adhering to skin or suit, serious accidents such as burn or blindness will be resulted.
- Treat old battery properly, laid it flatly that is in a state of all joints upward otherwise battery liquid will pour out and fire and burn will be resulted.
- Do not keep using the battery when its level is under LOWER LEVEL, otherwise the battery will go bad rapidly and its heat could result explosion accident.

Note:

When discarding old battery, please contact with battery dealer or Hualing service station.

► Disassembly of battery

Warning ⚠

Before battery cable is released, cathode (—)joint should be separated firstly: Cathode joint shall be the last one for installation. If frame or anode (+) contact with tools, etc., in a cathode joint connected state, it is extremely dangerous as short circuit spark will be caused.

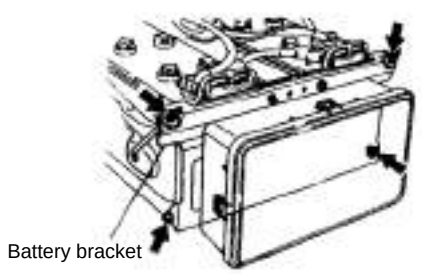

04001

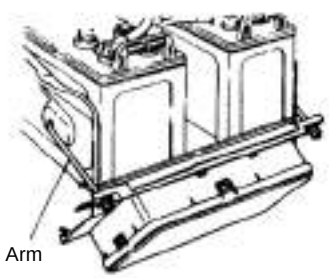

04002

Remove battery as following steps while replacing for check:

1. Remove battery cover.

2. Remove battery cable off battery ends.

3. Screw off 4 retaining nuts of battery(shown as arrows in figure)

4. Push the front baffle of battery bracket down and then fix it to arm at hanging state.

5. Remove battery. Reassemble it at the reversed sequence of disassembly.

Caution ⚠

Please ensure the battery be fixed stably, otherwise the battery looseness in bumping driving will damage the battery shell and pole plates and shorten durability of battery.

►Checking Battery Liquid Level

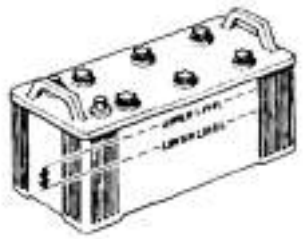

03965

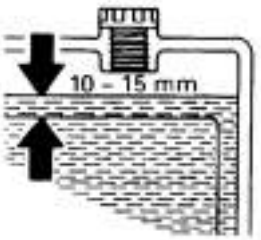

04631

● Liquid level between UPPER and LOWER on the side of battery shell means that battery is at good condition. Please refill battery liquid or distilled water up to UPPER level if liquid is not sufficient.

● Liquid level 10~15mm above pole plate shows appropriate condition of battery without scales. The single scale on some batteries means LOWER level.

Danger ⚠

Please pay attention that battery liquid is acid, its adherence will erode your skin or suit. Wash with soap sufficiently once being adhered. Wear safety glasses and rubber gloves during operation of battery.

Caution ⚠

After filling battery or distilled water, charge battery or drive the vehicle for a while. This is especially important in winter as battery not charged will be damaged by freezing.

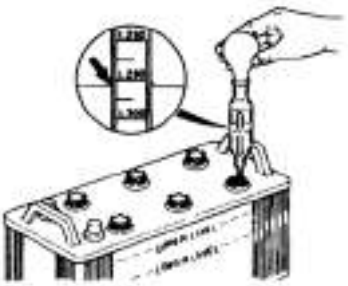

04632

► Specific Gravity of Battery Liquid

Judge battery condition by specific gravity of battery liquid. If it is under 1.220(battery liquid temperature20℃), please charge the battery.

Use following formula to calculate specific gravity if liquid temperature is not 20℃.

S_{20}=St+0.007(t-20)

herein lie in the formula

S_{20}：Specific gravity at liquid temperature 20℃St;Specific gravity measurement

t: liquid temperature of battery

Check the battery at the nearest Hualing Automobile service station.

Danger ⚠

Please pay attention that battery liquid is acid, its adherence will erode your skin or suit. Wash with soap sufficiently once being adhered. Wear safety glasses and rubber gloves during battery operation.

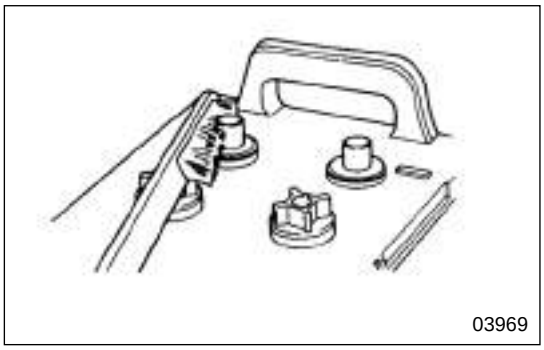

► Joints cleaning

Dirty or rusty joints should be cleaned. It is easy to clean with warm water if the rusty joints are adhered with powder.

If the joints are badly rusty, please disassemble the battery cable and polish them with steel wire brush or sand paper.

After cleaning, paint with thin film of lubricant.

Note

Start the engine by assistant battery cable in appropriate way (parallel connection).

Air Cleaner —— Cleaning

► Cleaning

Air cleaner shall be regularly disassembled (about per 6 months). Clean dust off with water or compressed air.

Air cleaner blockage will cause inefficiency of compelling ventilation, warm air, air conditioner, etc. and the damage to fan motor at the same time.

Caution ⚠

Please shorten the cleaning intervals if the vehicle is driven on the dusty grounds frequently.

► Outboard air cleaner – Assembly & Disassembly

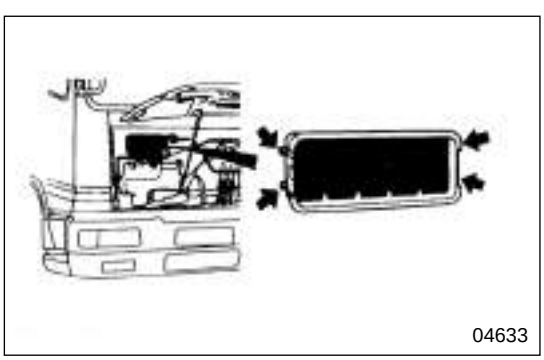

Bend 4 claws outward to disassemble air cleaner. Align claws and then push the cleaner to the original position while assembling the air cleaner.

Caution ⚠

Do not over bend the claw while disassembling the air cleaner, otherwise the claw will be ruptured.

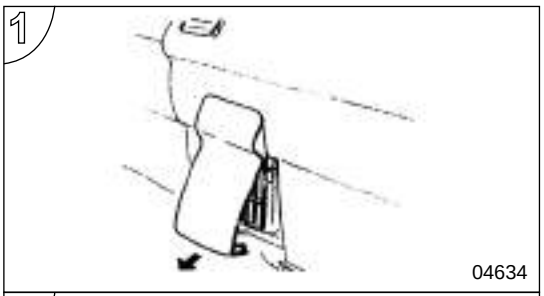

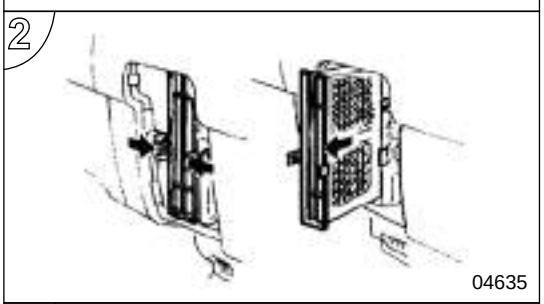

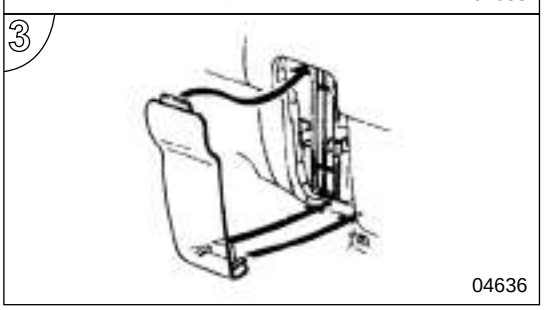

► Inboard air cleaner – Assembly & Disassembly

1. Open the strainer cap.

2. Clasp both sides of tabs and draw the cleaner out at the same time. Push to the end when reassembling.

3. To reassemble strainer cap, push the front part first and then insert the rear part.

Caution ⚠

Do not exert too much pressure on the tabs; otherwise they will be broken when pulling out air cleaner.

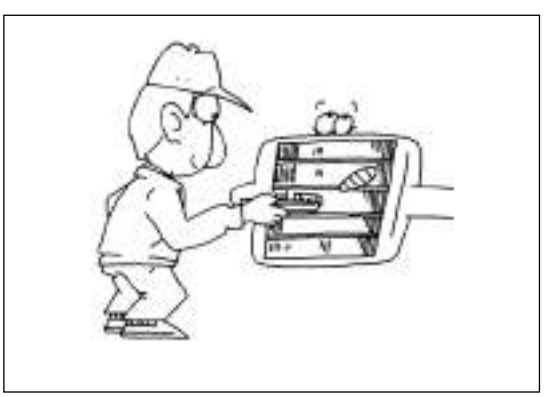

Radiator Section —Cleaning

►vehicles with turbochargers

If there is too much dust and clay adhered on the front of radiator section, the engine performance will be affected. Please regularly clean with brush or other tools.

Caution ⚠

The radiator section is likely to be damaged while cleaning it with something sharp.

Z09338

Z0933

Body Cleaning

► Washing

● Wash the body and bottom of the vehicle and the mudguard with water tube. For vehicle which is often driven on coast or road scattered with antifreeze, should be cleaned sufficiently in time.In addition, wax vehicle per month.

● Step on the step board of the front bumper and hold the handle to clean front parts of vehicle such as windshield. Parts with * in illustration are options.

Warning ⚠

● Be careful of the wet step board of the front bumper as it is slippery in rainy or snowy days.

● Do not be hurt by the sharp ends of metallic parts while cleaning wheels and bottom of vehicle.

● It is prohibited to wash the imported engines with ECN controller and all the electrical parts.

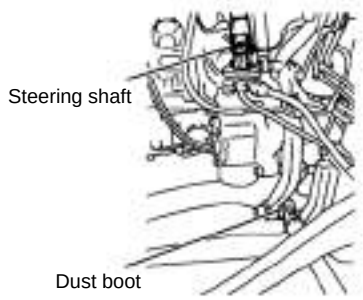

Z1023

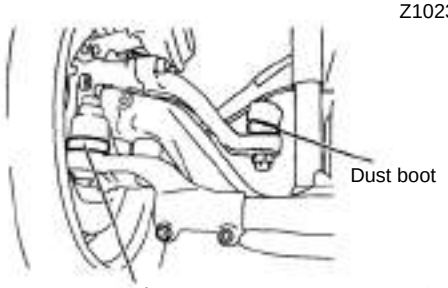

Z10232

Caution ⚠

● Do not water air inlet of engine and its joint parts. Do not let water flow into the air inlet of engine while cabin is tipped for washing vehicle.

● Avoid pouring water or liquid with high-pressure washer directly to some electrical parts, such as the starter, alternator and tie-in, etc.

● Do not let steam and water from high-pressure washer close to dust boot and steering equipment continuously otherwise damage will be resulted.

● Never use thinner or petrol to clean plastic and resin parts otherwise discoloration and crackles will be caused.

● Do not pour water directly into cabin for cleaning otherwise some electrical parts, such as relay, computer, etc. will be damaged.

● Screw off the oil drain plug on the floor to let the dew flow out or wipe it up with cloth.

Note:

As the key holes and rubber parts of the vehicle would easily freeze after washing in winter, those parts should be wiped away water and painted with sufficient top-quality silicon lubricant.

► Cabin Interior Trim Maintenance

● Inappropriate maintenance will cause discoloration, vestige and rough surfaces.

Especially, the detergent should be diluted enough (at least tenfold) and wet or dry wipe sufficiently.

● Do not wash the inside of the vehicle before carpet moved away; otherwise,the floor will be rusty. At the same time, if radiator and other electrical parts are wet, damage will be caused.

● Remove the carpet out of vehicle for washing and do not put it back until it is absolutely dry.

Warning ⚠

After cleaning, please put the carpet and ensure that it will not affect the smoothness of the accelerating pedal and brake pedal operation.

● Clean dirt, dust, fingerprint or cigarette, etc.

Material	Cleaning method
Fabric, leatheroid	Clean with the sponge wetted in the warm water 100cc in which a spoonful detergent diluted and then take wet cloth to wipe up the cleanser.
plastic	Wet wipe and dry wipe the dirt with the cleanser essence or detergent diluted with enough water (at lease tenfold).

● Clean Grease, hair cream, lipstick and shoeshine, etc.

Material	Cleaning Method
fabric, leatheroid	Pat and wipe with gauze containing volatile oil.

Troubleshooting

Causes and Corrections

Accidences and faults will be reduced by strictly performing the routine inspection and maintenance schedule. Please make sure to carry out the routine inspection and maintenance.
In case of fault occurred, please carry out inspection and correct the fault as per the contents in the following table. When there is a fault in the electrical system, always check the fuse first. In case the fault cannot be fixed by your own, or cannot be eliminated after correcting with the methods described in the following table, please go to the nearest Hualing Automobile Service Station for reparation.

► Engine cannot be started

Starter cannot turn or only turn slowly

Possible causes	Corrections	Page for registration
Starting switch fuse or large-current fuse is blown out.	Replace with fuse of specified Amperage or replace the large-current fuse.	13-8
Fuse is blown out	Replace with fuse of specified capacity	13-19
Battery over-discharged	Charge the battery	12-68
Loosening, coming off or corroding of the battery cable	Re-install the cable	12-68
Too high viscosity of the engine oil	Replace with the engine oil of appropriate viscosity	12-23
Abnormal action of the starter	Go to the nearest Hualing Automobile Service Station for reparation.	-

Starter can rotate normally

Possible causes	Corrections	Page for registration
Out of fuel	Refill the fuel and give out the air.	13-20
Fuel supply motor does not work	Replace the fuse	13-7
Air in the fuel system	give out the air	13-20
Fuel filter blocked	Replace the filter element	12-35
Fuel frozen	Warm up the fuel pipe with water(below 60℃)	-
Air filter blocked	Clean or replace the filter element	12-35
Insufficient warming time for the engine	Operate correctly	4-7
Fuse on engine preheating circuit is blown out	Replace the fuse after finding out the causes.	13-9

►Engine can be started, but it is cut out immediately

Possible causes	Corrections	Page for registration

Too low idling speed	Go to the nearest Hualing Automobile Service Station to adjust the fuel injection pump	-
Fuel filter blocked	Replace the filter element	12-35
Air filter blocked	Clean or replace the filter element	12-35

► Exhaust black smoke

Possible causes	Corrections	Page for registration
Air filter blocked	Clean or replace the filter element	12-35

► Engine overheated

Possible causes	Corrections	Page for registration
Foreign matters adhered on the front part of the radiator	Clean off with soft brush	12-45
Insufficient coolant	Add in coolant	12-39
Improper installation of the radiator pressure outlet cap	Install properly	-
Fan belt loosened	Adjust the tension of the belt	12-45
Dirty coolant	Clean the cooling system and replace the coolant	12-44

► Engine oil pressure does not increase

Possible causes	Corrections	Page for registration
Insufficient engine oil	Add in engine oil	12-23
Unsuitable engine oil viscosity	Replace with engine oil of appropriate viscosity	12-23

► Excessive consumption of fuel oil

Possible causes	Corrections	Page for registration
Leakage of fuel oil	Check the fuel oil system, and tighten any of the loose part.	-
Air filter blocked	Clean or replace the filter element	12-35
Insufficient tyre pressure	Change with tyre of specified pressure or fill in air	12-52
Clutch slippage	Adjust the free running of the clutch pedal	-

► Excessive consumption of engine oil

Possible causes	Corrections	Page for registration
Unsuitable engine oil used	Replace with appropriate engine oil	12-23
Excessive engine oil	Adjust to appropriate oil level	12-23

Oil leakage	Check the engine oil system, and tighten any of the loose part.	-
Too long interval for engine oil replacement	Change the engine oil at appropriate time	12-23
Engine oil filter blocked	Replace the filter element	12-33

► Insufficient power

Possible causes	Corrections	Page for registration
Hand brake has not been disengaged.	Make sure it is disengaged	4-18
Air filter blocked	Clean or replace the filter element	12-35
Fuel oil filter blocked	Replace the filter element	12-35
Clutch slippage	Replace the clutch driven disc of excessive wearing	-
Air in the fuel oil system	Bleed out the air	13-26

► Clutch not completely disengaged

Possible causes	Corrections	Page for registration
Too low air pressure	Increase the engine speed so as to rise up the air pressure	-
Insufficient brake fluid	Add in brake fluid	12-30
Excessive free running of the clutch pedal	Adjust the free running	-

► Bad braking performance

Possible causes	Corrections	Page for registration
Insufficient air pressure	Increase engine rotation speed to increase the pressure	-
Brake shoe worn out, or too big clearance between the brake drum and brake shoe.	Go to the nearest Hualing Automobile Service Station for adjustment/replacement.	-

► Braking deviation

Possible causes	Corrections	Page for registration
Uneven pressure between tyres	Adjust to specified tyre pressure	12-52
Tyre side wearing	Replace the tyre	12-55
Cargo load focused on left or right side	Evenly distribute the load	6-8
Uneven clearance between brake drum and brake shoe of each wheel.	Go to the nearest Hualing Automobile Service Station for adjustment.	-

► Heavy steering wheel operation

Possible causes	Corrections	Page for registration
Cargo load focused on front side	Evenly distribute the load	6-8
Insufficient power steering fluid	Add in power steering fluid	12-32
Insufficient air pressure of the front tyre	Adjust to specified pressure	12-52

► Steering wheel wobbling

Possible causes	Corrections	Page for registration
wheel nuts loosened	Tighten the nuts with specified torque	12-64
Uneven pressure between tyres	Adjust to specified pressure	12-52
Side wearing of the tyre	Replace the tyre	12-55
Unsuitable wheel balance	Go to the nearest Hualing Automobile Service Station for adjustment	-

► Bad return of the steering wheel

Possible causes	Corrections	Page for registration
Insufficient lubrication of each part	Add in lubricating grease	12-18

►Lamp does not light up

Possible causes	Corrections	Page for registration
Filament broken	Change the light bulb	13-10
Fuse blown out	Replace with the fuse of specified Amperage	13-7
Circuit broken or bad grounding	Go to the nearest Hualing Automobile Service Station for check and reparation.	-
The plug on the harness loosened or coming off	Check and properly insert the plug	

► Battery frequently over-discharged

Possible causes	Corrections	Page for registration
battery connector loosened, coming off and corroded	Clean the corrosive part and make sure the connector is tightened up	12-68
Fan belt loosened	Adjust the belt tension	12-45
Insufficient battery fluid	Add in distilled water	12-68
Battery service life ended	Replace the battery	12-68
Too low idling speed	Go to the nearest Hualing Automobile Service Station for adjustment	12-68, 13-19
Only driving in the night	Charge the battery	-
The switch on “ON” position	The switch shall be often closed	

Stopping in case of a Fault

Warning ⚠

It is extremely dangerous to stop in the tunnel, try your best to drive out of the tunnel and park in a safe place.

In case a fault occurred on your vehicle when you are driving on the way, be calm and observe situation of the cars following up, gradually slow down your vehicle, and then park it in a safe place which will not affect the traffic.

Note:

After parking, wheel stopper shall be installed, for sometimes hand brake may fail to work due to the problem.

► Showing the fault

After the car is stopped, measure to show the fault shall be taken, otherwise, there will be rear collision by following vehicles.

- Light up the emergency lamp.
- The red triangle warning sign shall be placed behind the vehicle at conspicuous place as per the specification.

00649

►Reparation

Check the fault position, if it can be fixed by yourself, you shall carry out the reparation work with full attention of other vehicles passing through. In case the problem cannot be fixed by yourself, please contact the nearest Hualing Automobile Service Station.

Warning ⚠

It is extremely danger to carry out reparation work on a highway or inside a tunnel, which shall be absolutely avoided.

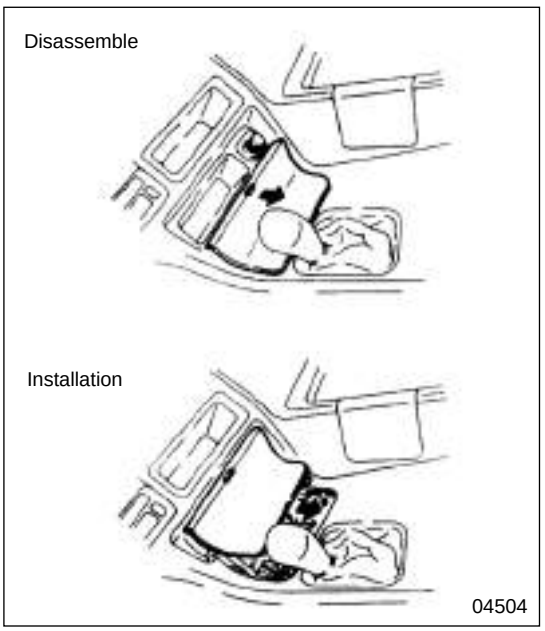

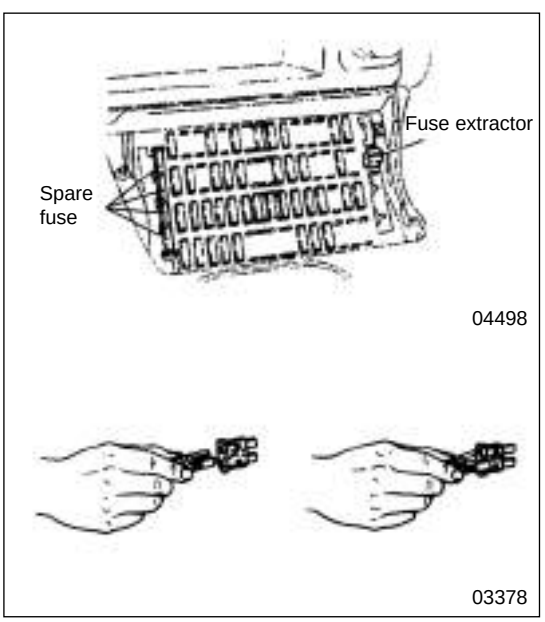

Fuse Blown-out

► Replacing the fuse

Before replacing the fuse, the starting switch must be turned to LOCK position, and all the switches shall be put on OFF position. Then replace with fuse of specified capacity.

Warning ⚠

Fuse of genuine brand of Hualing Automobile with specified Amperage shall be used. Fire may be caught, if fuse of unsuitable Amperage is used.

● Use extractor to pull out the burnt fuse, and use same method to pull the top of the fuse box cover so as to remove it. Alight with the fuse socket, press the top of the fuse down to fix it in the position.

● The Amperage of the fuse and its protecting circuit are indicated on the back of the fuse box cover.

● In case a fuse is blown out, it shall be replaced with a new fuse of the same indicated Amperage. The spare fuse is installed on the left and right side inside of the fuse box. When changing the fuse, use the fuse extractor installed inside of the fuse box to clip the fuse and pull it out.

Note:

After the spare fuse is used, remember to put new spare fuse in.

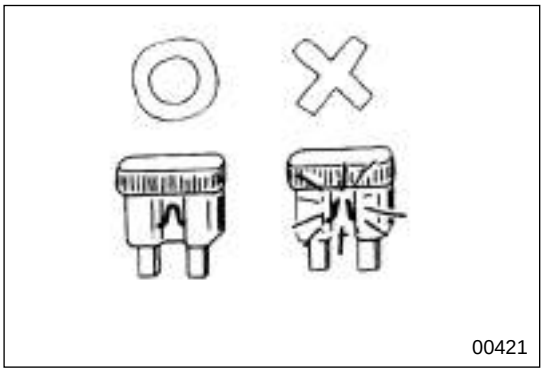

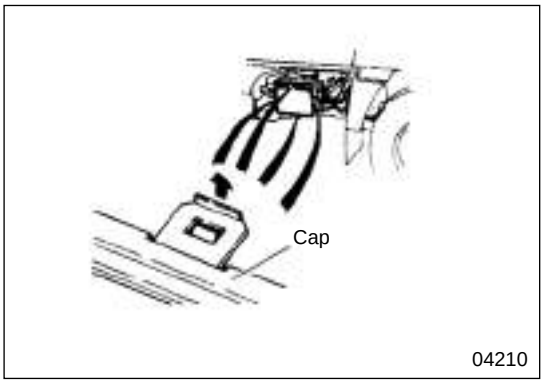

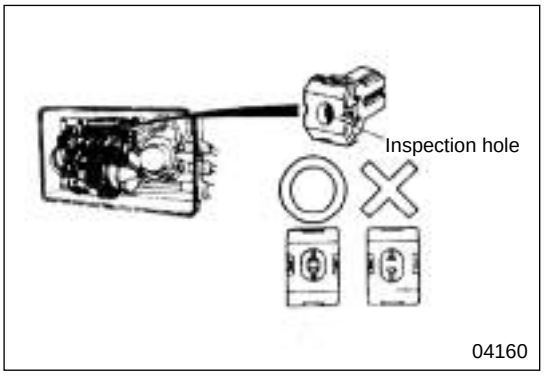

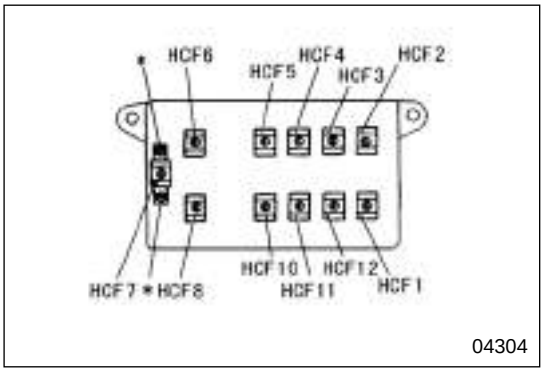

Caution ⚠

- If the fuse is blown out for unknown reason or the fuse is blown out again after two times of replacement, please go to the nearest Hualing Automobile Service Station for reparation.
- Do not wet the fuse box. In case it gets wet, check to see if there is water drop into the fuse box. If water drops enter into the fuse box, there will be failure of electrical system and will cause fire accident. It can only be used after the water is dried.

► Replacing the large-current fuse

Large-current fuse has the same function as the normal fuse, which is installed in the box nearby the battery. In case the electrical devices stop working, the large-current fuse shall also be checked besides the normal fuses.

1. Use finger to take down the four claws from the box cover near the battery, and then remove the cover.

2. Check through the inspection hole to see if the large-current fuse is blown out. If it is blown out, replace with new one of the same specification and same brand.

Warning ⚠

Large-current fuse must be genuine Hualing automobile component and must be replaced with large-current fuse of specified Amperage. If large-current fuse other than the specified Amperage is used, sometimes, it may cause fire accident.

3. When removing the 100A(blue)large-current fuse, first unscrew the two bolts (indicated with * in the drawing), the high-current fuse then can be easily removed.

4. Refer to paper Instruction Manual page 13, it adds HCF940A fuse, which is the preheating system fuse for model produced by Weichai.

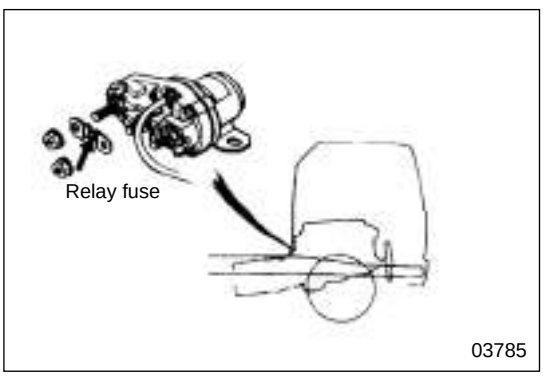

Caution ⚠

● If large-current fuse is blown out, please go to the nearest Hualing Automobile Service Station or check and replacement.

● When installing the box cover, press the claws until the sound of click is heard. Make sure the box cover is properly closed to prevent the entering of rain water or dust.

Engine preheating circuit fuse

For safety purpose, a fuse is installed in the heating relay on engine preheating circuit.
If the air heating indicating light does not turn red when the air heating switch is pressed down, please check the fuse in the heating relay.

Warning ⚠

Genuine fuse of Hualing Automobile with specified Amperage must be used. If fuse other than the specified Amperage is used, sometimes it may cause fire accidents.

If the fuse if blown out, first disconnect the negative (-) connector of the battery, and then replace the fuse.

Caution ⚠

One connector of the heating replay is normally active with power. For safety purpose, the negative (-) connector on the battery shall be disconnected first, and then replace the heating relay fuse.

Filament Blown-out

Before replacing the bulb, the ignition switch must be put on LOCK position, and every switch must be OFF.

Warning ⚠

Please use 24V light bulb with specified wattage. Otherwise, it may cause excessive current in the system, and lead to fuse blowing out or fire accident caused by wiring overheated, which is extremely dangerous.

Caution ⚠

Apart from headlamp and fog lamp, all the other lamps have used resin shade. Please do not clean them with alcohol or alcoholic dilution. When filling up the brake fluid, pay attention not to contaminate the lamp shades with brake fluid. Otherwise the lamp shades will change color or crack. In case of brake fluid contaminated on the lamp shade, please wipe it clean or wash off completely with water.

Note:

For all the lamps, when driving in rainy days or washing the vehicle, sometimes there may be frost formed inside of the lamp shade. This is the same as that the window glass has frost in rainy days, which is caused by the temperature difference between inside and outside of the lamp. This will not affect the normal function of the lamp, and will disappear naturally.

Code	Light bulb		Watts(24V)	Quantity
1	Front headlamp – rectangular shape, two bulbs	Low beam	70W	2
		Upper beam	70W	2
2	Front fog lamp(halogen bulb)white		70W	2
3	Combined turn indicator(turn indicator/position lamp)		21W/5W	2
4	Side turn indicator		21W	2
5	Step lamp		5W	2
6	Speed indication lamp		12W	2
7	Flank indicator		10W	2
8	License light		10W	2
9	Rear combination lamp(dual-filament type)		21W/5W	2

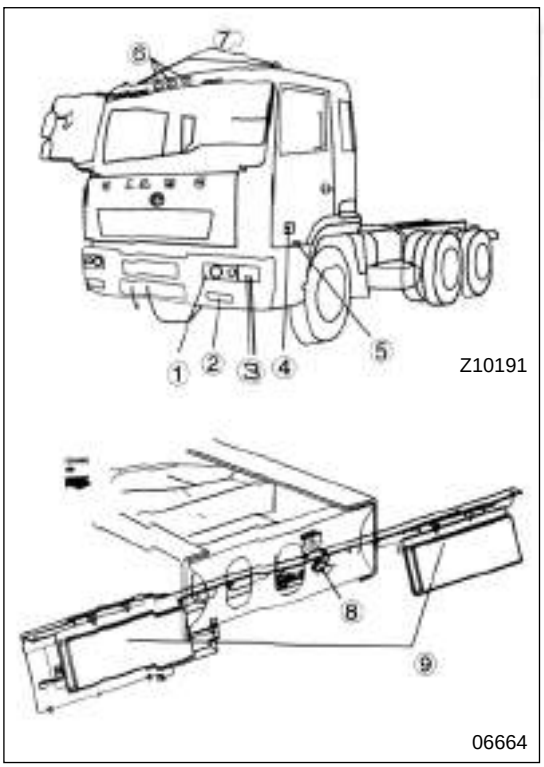

► Front headlamp – rectangular shape, two light bulbs（halogen bulb）

Do not touch the glass surface of the halogen bulb with hand. The grease or other containments on the skin will affect the glass and shorten the service life of the bulb.

Note

Do not change the position of the light adjusting screw. In case it is changed due to mal-operation, please go the nearest Hualing Automobile Service Station for adjustment.

● Changing the light bulb

1. Disconnect the connector from the back of the lamp.
2. Remove the rubber cap with coupler.
3. Press down the side with the indication of LOCK of locking plate, while at the same time move it towards the opposite direction to the arrow, so as to disengage the locking plate.
4. Lift up the locking plate, remove the light bulb.
5. After the new bulb is installed, lighten all the parts as per the reversed direction.

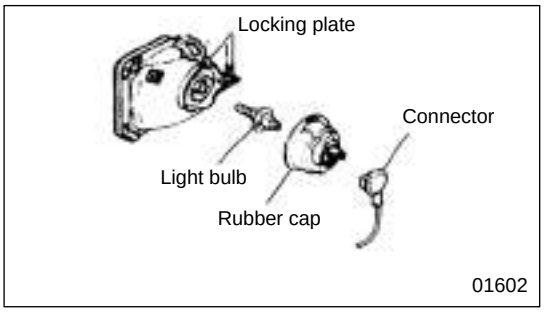

Caution ⚠

● When installing the rubber cap with coupler, make sure that the side with TOP marking shall face up.

● The rubber cap with coupler shall be tightly assembled on the reversed side of the coupler installing frame and the front headlamp proper.

● Outer lamp

1. Disconnect the connector from the back of the lamp.
2. Remove the rubber cap.
3. Turn the lock ring to opposite direction of the arrow, and take it down.
4. Pull out the light bulb
5. Install the new light bulb. Make sure that the 3 notches on the light bulb and the light bulb proper are correctly aligned.
6. Install the front headlamp as per reversed order of the disassembling procedure.

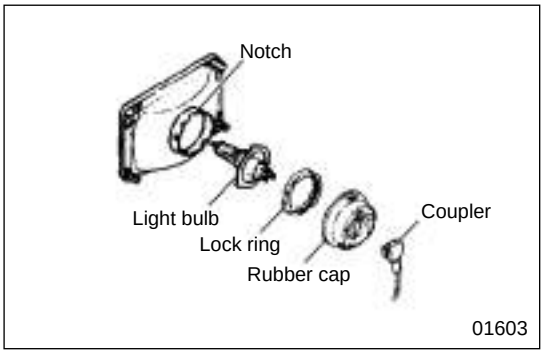

Caution ⚠

● When installing, the side with TOP marking shall face up.

● When installing, the rubber cap shall be tightly assembled on the bottom of the light bulb and shall be closely against the back surface of the front headlamp proper.

► Front headlamp – projection type（halogen bulb） OPT

Caution ⚠

Do not touch the glass surface of the halogen bulb with hand. The grease or other containments on the skin will affect the glass and shorten the service life of the bulb.

Note

● Do not change the position of the light adjusting screw. In case it is changed due to mal-operation, please go the nearest Hualing Automobile Service Station for adjustment.

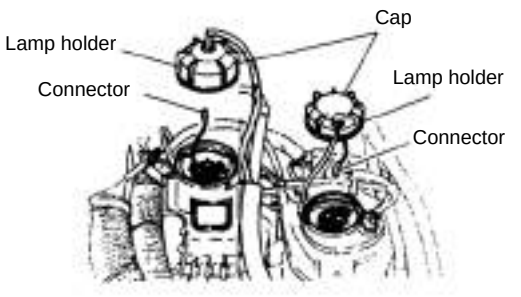

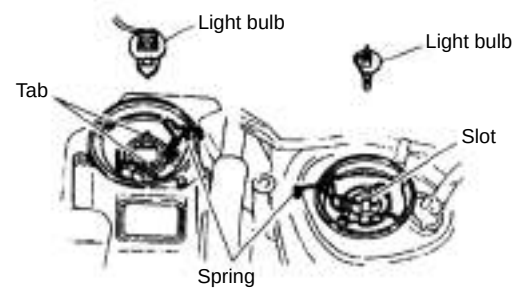

1. Turn over the cab.
2. Turn the cap along counter-clockwise direction, and remove it.
3. Remove the connector. In case of outer light bulb, remove the connector inside of the cap.
4. Remove the light bulb fixing spring, and remove the light bulb.
5. When installing new bulb, make sure it is aligned with the tab on the headlamp shade (when installing the outer bulb) or with the slot on the headlamp shade (when installing the inner light bulb).
6. Please clean the dirty seal members.
Check if the seal is clean, if not, please clean it.
7. Assemble the connector, install the rear cap, and tighten it up along the clockwise direction.
8. Lower down the cab.

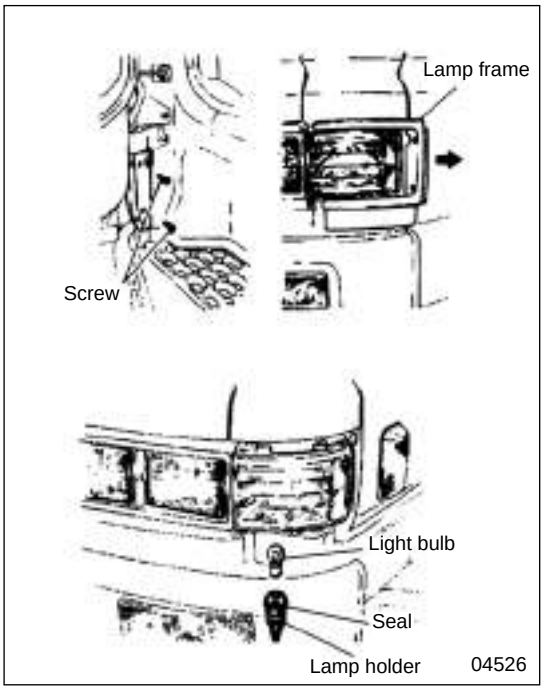

► Replacement of width lamp or the bulb of turn indicator/Replacement of the bulb of width lamp.

1. Turn it off from the back.
2. Please clean the dirty seal.
3. Re-assemble the width lamp as per the reversed sequence of the disassembling procedure.

Caution ⚠

When disassembling and installing the lamp frame, pay attention not to let the rubber seal fall off.

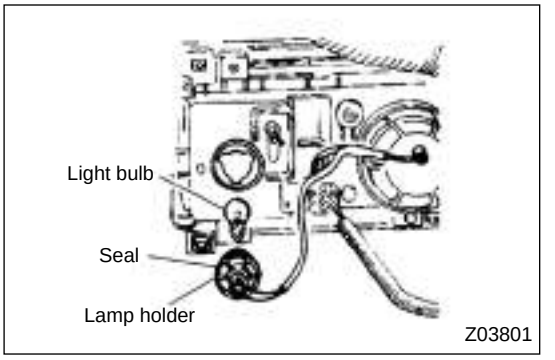

► Replacement of the front turn indicator

1. Turn over the cab.
2. Remove the socket by turning it along counter clockwise direction.
3. Turn the light bulb along counter clockwise direction, while pressing it down, so as to remove it. Install a new bulb.
4. Install the socket, turn it along clockwise direction.
5. Please clean the dirty seals.
6. Lower down the cab.

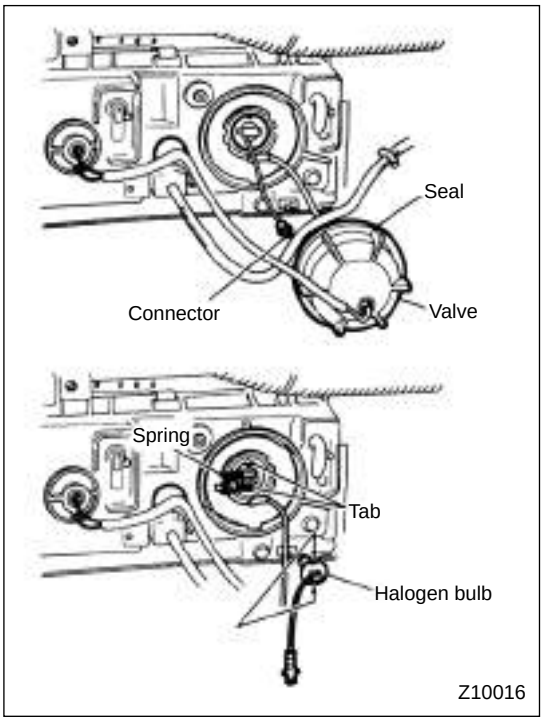

► Replacement of the light bulb of the front fog lamp

1. Turn the rear cap counter-clockwise in order to remove the rear cap.
2. Remove the connector from inside of the cap.
3. Remove the spring that fixing the halogen lamp, and then remove the bulb.
4. The slot on the valve shall be aligned with the tab on the fog lamp during installation, and then lock up the bulb with the spring.
5. Please clean the dirty seals.
6. After installing the connector, install the cap and turn it clockwise.

Caution ⚠

Do not touch the glass surface of the halogen bulb and the surface of the reflector with hand. The grease or other containments on the skin will affect the luminance of the lamp and shorten the service life of the bulb.

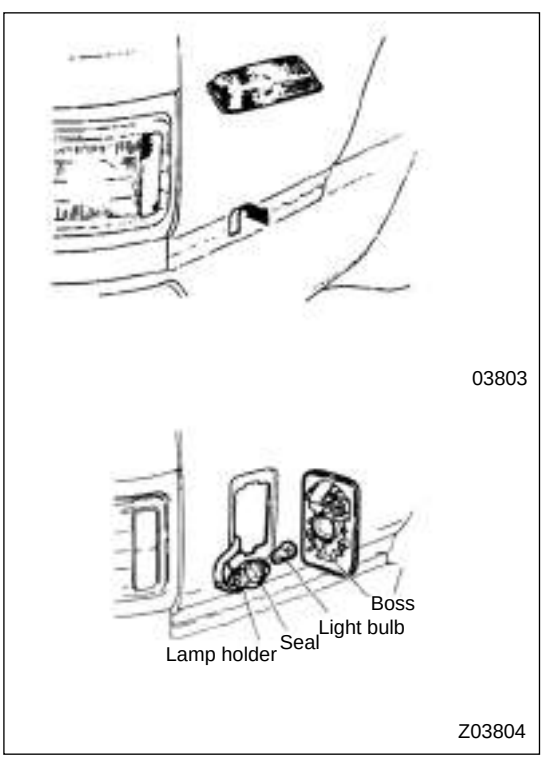

► Side turn indicator

1. Push up the base of the indicator, so that boss will be disengaged. Then remove the lamp holder from the body.
2. Turn the socket counter-clockwise and remove it.
3. Turn the light bulb along counter-clockwise direction, while pressing it down, so as to remove it. Install a new one.
4. Please clean the dirty seals.
5. Reassemble the socket. After it is engaged in the bottom of the indicator, tightly push the lamp body into the lamp holder on the vehicle body.

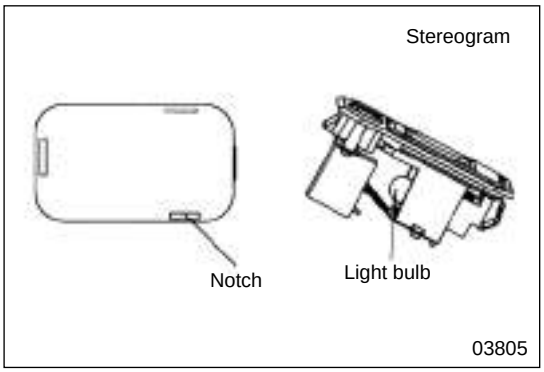

► Replacement of the reading light bulb

1. Insert a flathead screw driver into the notch on the lamp shade, remove the lamp shade.
2. The light bulb can be removed by turning the light bulb counter-clockwise while pressing it down.
3. Install a new light bulb.

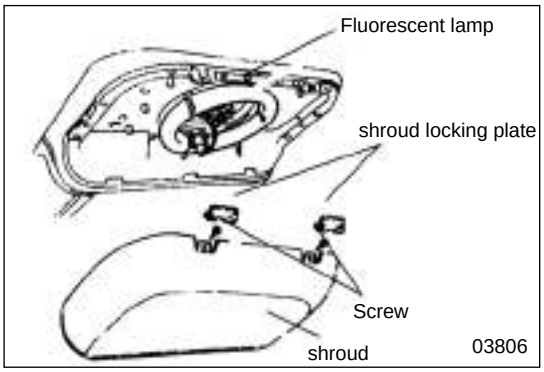

► Replacement of the fluorescent lamp

1. Insert a flathead screw driver into the cutting slot on the shroud locking plate, so as to remove the shroud locking plate.
2. Unscrew the screws with cross-head screw driver, so as to remove the shroud.
3. Replace the fluorescent lamp tube and remove the socket from the lamp tube so as to take out the lamp tube.
4. Install the shroud, tighten the screws, and then install the shroud locking plate.

► Replacement of other lamps

1. Loosen the screws fixing the light shade in position, and then remove the light shade.
2. Turn the light bulb counter clockwise while pressing it down to remove it.
3. Insert in new light bulb, and turn it along clockwise direction.
4. Install the light shade and make sure the sealing member is on correct position. In case the sealing member is twisted or in bad position, it will cause rain water entering into the inside, and shorten the service life of the lamp. In addition, please clean up the dirty seals.
5. All the screws for the fixing of the light shade shall be tightened completely and evenly.

04527

Brake Fading

Warning ⚠

- Except for emergency, it is not allowed to apply hand brake abruptly while driving on the way, otherwise it will cause the back end whipping of the vehicle, or even cause roll-over accident.
- The brake system adopts dual-circuit system. One circuit is specially for the front wheels, and the other circuit is specially for the rear wheels. In this way, even one system has fault, the vehicle can still be stopped with the other system. Pay attention that in such case, the braking force is very small; it is not allowed to continue to drive the car with only one braking system in function.

After stepped down the brake pedal hardly and lowered the gear, use engine brake and exhaust brake together to stop the vehicle. If necessary, pull up the handle of the hand brake. After the vehicle stopped, check all the components, and then go to the nearest Hualing Automobile Service Center for handling of the problem.

Parking Braking can't be Released

When the brake piping system has fault and leads to the air pressure drop in the parking brake piping system, even the parking brake valve is operated, sometimes the parking brake status still cannot be released. Use the following method, the manual parking brake status can be released.

Warning ⚠

- Since the air pressure does not increase, the brake is completely ineffective or the brake force is greatly decreased. In addition, if the manual parking brake is released, the parking brake is still ineffective. Therefore, on places such as slope etc., absolutely do not release the parking brake in manual way.
- Except for the towing by special tractor or for the necessity of moving because the vehicle is parked too close to the road side, otherwise please do not release the parking brake status by manual mode.
- In case the brake piping system has fault, please contact Hualing Service Station immediately for inspection.

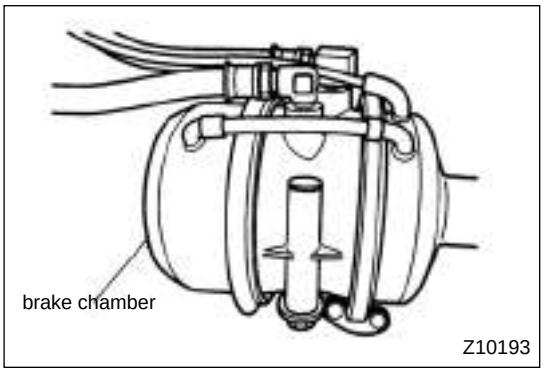

►Operating the brake chamber as indicated in the drawing near the inner side of the tyre.

1. Activate the tyre brake.

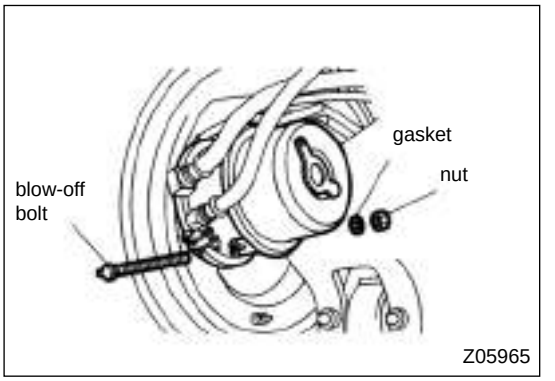

2. Remove the blow-of bolt, nut and gasket installed in the brake chamber.

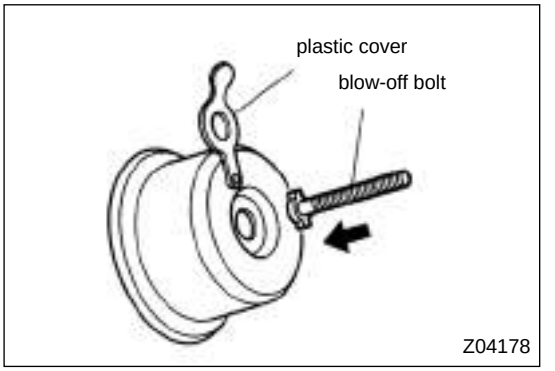

3. Remove the plastic cover from the brake chamber.
4. Insert the blow-off bolt from its top into the hole of the brake chamber, until the bottom of the bolt is against the hole.
5. Turn the blow-off bolt clockwise for 1/4 turn. Make sure that the blow-off bolt cannot be pulled out.

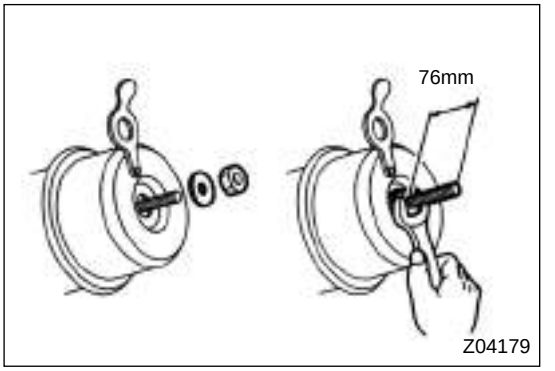

6. Install the gasket onto the blow-off bolt, and tighten the nut on it.
Use spanner to tighten the nut（square size 19mm）, to release the parking brake. When measured from the end face of the nut, if the length of blow-off bolt reaches 76mm, the parking brake is then completely released.

Caution ⚠

Do not let the distance from the blow-off bolt to the nut end face exceed 76mm. Otherwise, the brake chamber will be damaged.

Engine Cut-out during Driving

When driving on the way, if the engine is cut out, it will cause following dangerous situations, and the vehicle shall be stopped immediately and the engine shall be re-started.

- Because there is no supply of compressed air, it will greatly lower the braking capacity.
- The power-steering system also does not work so that the steering wheel becomes extremely heavy to operate. At that time, one shall operate the steering wheel with all his strength.

Warning ⚠

If the compressed air in the air tank is used out, the brake will completely lose its function.

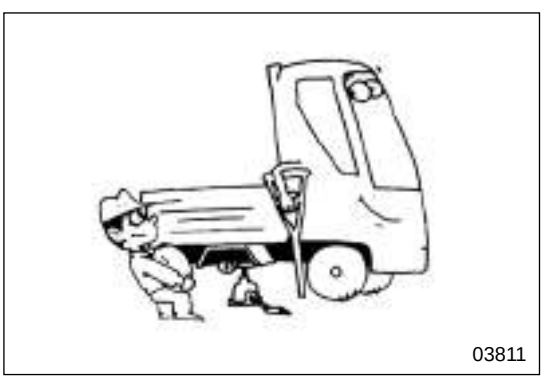

Tyre Blow-out during Driving

Avoid abrupt braking and hold the steering wheel firmly, gradually lower the speed and stop the vehicle in a safe place.

To replace the tyre, select a flat place that will not affect the traffic.

Battery Over-discharged

Use auxiliary charging cable to connect in parallel with the battery of other vehicle, and start up the engine.

Auxiliary charging cable of large capacity shall be used, and make sure that the voltage of the battery is the same with the helping vehicle (24V).

Warning ⚠

- Connect the auxiliary charging cable as per the correct sequence. In addition, it is prohibited to use this method when transporting the flammable and explosive cargos. Because when the auxiliary cable contacts the beam, it will generates electric spark, which will cause hydrogen ignition explosion of the battery.
- It is extremely dangerous to start-up the engine by towing or pushing the vehicle, which shall be absolutely avoided, unless there is no other possible way.
- Before connecting the auxiliary charging cable, first check and confirm the level of the battery. If charging the battery with its level below the lower limit（LOWER LEVER）, it will cause battery overheat or explosion. Add the battery fluid to specified level first and then charge the battery.

1. Connect the battery in parallel.

2. Remove the battery cover.

3. Connect the auxiliary cable between the fault vehicle and the rescue vehicle as per the sequence indicated in the drawing.

① Connect one end of the red auxiliary cable to the positive (+) connector of the fault vehicle battery.
② Connect the other end of the red auxiliary cable to the positive (+) connector of the rescue vehicle battery.
③ Connect one end of the black auxiliary cable to the negative (-) connector of the rescue vehicle battery.
④ Connect the other end of the black auxiliary cable to the frame of the fault vehicle, as far as possible away from the battery.

4. After the above connection is completed, start the engine of the rescue vehicle, let it continue to run with the speed a little higher than the idling speed. Then, start-up the engine of the fault vehicle. In case it is difficult to start in cold weather, the engine of the rescue vehicle shall run for several minutes first to charge the battery, after that the start-up operation can be carried out.

5. After the engine of the fault vehicle is started, disconnect the auxiliary cable as per the reversed sequence of the connecting.

Fuel Oil Cut-off

If the engine is out due to the cutoff of fuel oil or due to air in the fuel system when replacing the fuel oil filter, the engine cannot be started only by filling the fuel. In such situation, the air in the fuel oil system must be bled out as per the following procedure.

03813

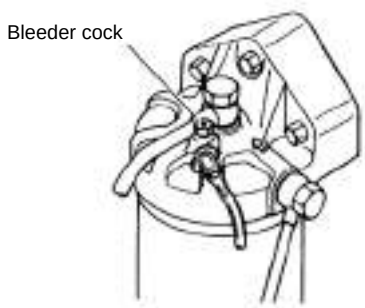

05092

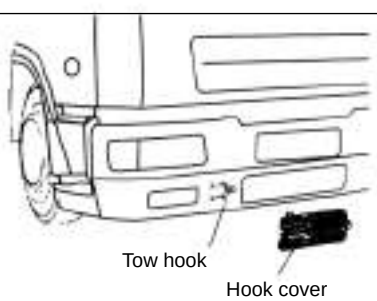

04533

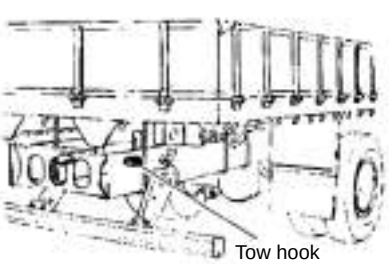

04534

►Bleeding of the fuel oil system

Warning ⚠

In case there is fuel oil leakage or spilled out fuel oil left un-cleaned, it will become the cause of fire accident. Therefore, after the air is bled out, the fuel oil spilled out shall be wiped clean. In addition, check to make sure there is no oil leakage in the fuel oil system.

1. Turn the head of the manual oil pump counter clockwise and let the head float up.
2. Unscrew the bleeder cock of the fuel oil filter, press up and down the head of the manual oil pump to transfer the oil.
3. Bleed the fuel mixed with air bubbles from the bleeder cock. Continue to press the manual oil pump, until the fuel oil flowing out is not mixed with air bubbles.
4. After fuel oil without air bubbles is flowing out, tighten the bleeder cock.
5. Press the manual oil pump for 5-6 times more, and tighten it up clockwise with the head in pressed down status.
6. After the bleeding operation is completed, wipe up the spilled fuel oil and start the engine.
7. Check if there is any oil leakage.

During Traction

Warning ⚠

- Use special tractor to tow the vehicle, when the engine cannot be started or the air pressure cannot be increased.
- When there is fault of transmission or differential, the fault vehicle shall be towed by special tractor and under the status of rear wheels being lifted up from the floor.
- When the drive shaft is disengaged, the engine brake, exhaust brake, or manual brake cannot operate. Full attention shall be given to such situation, when towing the vehicle.
- Make sure that the brake system is working normally.

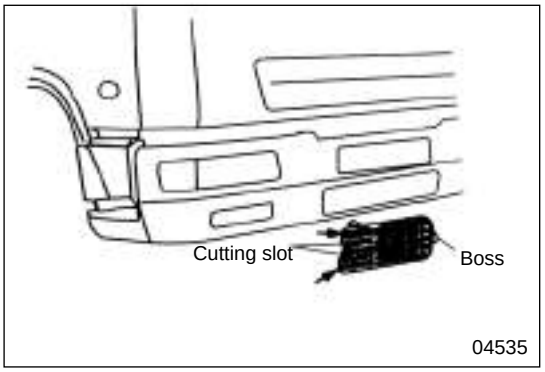

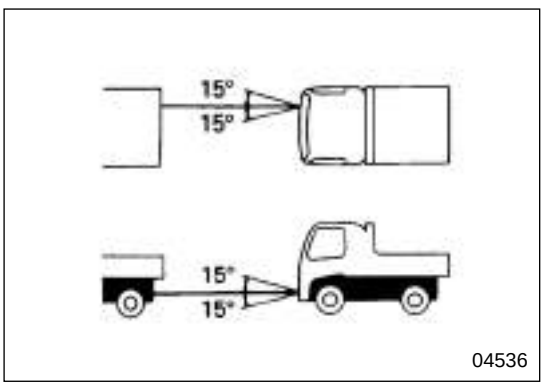

● Use strong drag rope, and make sure it is firmly connected to the tow hook. Remove the tow hook cover, and hang to the drag rope.

● To remove the hook cover, insert fingers into the cutting slot and pull it out. In case it cannot be pulled out easily, insert a flathead screw driver into the place as indicated by the arrow in the drawing, and pull it out. Pay attention not to damage the plastic components.

● When reassembling, insert the boss, and push in the cover.

Warning ⚠

When disassembling the tow hook cover, pay attention not to hurt the finger.

● For the purpose of safety, do not exceed the towing angle as indicated in the drawing. In addition, if there is possibility of sharp drag force（for instance, dragging the vehicle that trapped in a trench etc.）, it is not allow to carry out the towing operation, for such kind of drag force will damage the tow hook. Do not drag the vehicle which is heavier than the towing vehicle.

● Unload all the cargos from the fault vehicle.

● When drafted by vehicles other than the special tractor, the highest speed shall be controlled at 30km/h。

● Avoid abrupt start-up and the tow rope shall be properly tensioned.

● The fault vehicle shall be prepared for towing as per the following method:

1. Shift lever shall be put in neutral position.
2. The engine must run. If the engine stops, then the foot brake will lose function and the steering wheel will be heavy for operation.

Maintenance Data

Inspection and Replacement Periods for Oil/Grease Type and Filtering Element Type

The following table shows inspection and replacement periods for oil/grease type and filter element type. For repair periods of all parts of the vehicle, refer to “Table of periodic inspections”.

Inspection and replacement interval	Inspection and replacement items	Pages
Every 5,000km	* Check coolant	12-39
	Check clutch fluid	12-20
	Check transmission oil	12-27
	Check differential gear oil	12-29
	Check power steering fluid	12-32
	Add grease to each grease nozzle (except clutch release fork shaft and shift fork)	12-18
	Add grease on door hinges	12-22
Every 50,000km	Replace air filter element	12-35
	Replace wheel hub bearing grease	
Every 10,000km	Purge air filter element	12-35
	Purge fuel transfer pump strainer	12-38
	Replace engine oil	12-23
	Replace engine oil filter element	12-33
Every 25,000km	Add grease on clutch release fork shaft	12-18
	Add grease on clutch shift fork	12-18
	Rear seat side pad of cab(vehicle with cab manual tilting device)	12-23
	Check cab tilting device oil (vehicle with cab power tilting mechanism)	
Every 10,000km	Replace transmission oil filter element (vehicle with transmission oil cooler)	12-38
	Replace fuel filter element	12-35
	Replace transmission oil	12-27
	Replace differential gear oil.	12-29

* indicating inspection item shall also be carried out before using the vehicle. Pay attention to inspection of engine oil, which shall be included in inspection items before using the vehicle.

Inspection and replacement interval	Inspection and replacement items	Pages
Every week	Drain water accumulated in the water separator	12-39
Every 6 months	Replace coolant (when coolant includes anti-rusting agent or anti-freezing agent)	12-39
Every 12 months or 50,000km (whichever is earlier)	Replace power steering fluid (also replace inside engine oil filter element)	
Every 12 months	Replace clutch fluid	
	Check desiccant in air drier	
Every 24 months	Replace coolant (when containing LONGLIFE COOLANT)	12-39
Every 24 months or 50,000km (whichever is earlier)	Replace desiccant in air drier (optional)	

Mark in record column indicates need of disassembling or special device. Refer to Hualing automobile service station.

Caution ⚠

Replace the following at first 2,000~3,000km of a new vehicle:
Engine oil
Engine oil filter element (except bypass filter)
Transmission lubricating oil
Final drive gear oil
Power steering fluid
Fuel filter

Parts	Use of grease	Classification
Power steering gear	Power steering special hydraulic oil	
Clutch	Brake fluid	901 synthetic brake fluid (class DOT3)
Door hinge Grease nozzle (Front and rear ends of spring)	Chassis grease	NLGI No.2 (Li based)
Grease nozzle (steering shaft, front axle king pin, drive shaft, clutch release fork shaft, clutch release bearing) Hub bearing	Wheel bearing grease	NLGI No.2 (Li based)
Rear support abutment side pad of cab	Grease containing Mo	NLGI No.2 (Li based)
Cab tilting device (for vehicles with cab power tilting device)	Hydraulic oil	--
Grease connector Transmission controller Pivot univeral bearing	Grease including MoS_2	NLGI No.2 (Li based)

Inspection Record of New Vehicle

Inspection during Run-in Period for New Vehicle
First Check after 3000 km

Date _____ Accumulated mileage _____

Repairing factory's name _____

Address _____

Check New Vehicle (Overhaul Manual Used in Factory)
3000 km

Owner's name_____ Engine number _____

Signature_____ Chassis number_____

Address_____ Repair factory's name_____

Date_____ Address_____

Check items for new vehicle

- ☐ Complement lubricant, grease
- ☐ Replace engine oil
- ☐ Check oil level of clutch
- ☐ Replace gearbox oil
- ☐ Add grease to driving shaft
- ☐ Replace gear oil of differential
- ☐ Replace power steering fluid (at the same time, replace filter element of oil filter)
- ☐ Add grease to door hinge
- ☐ Add grease to needle bearing of crisscross shaft (FV)
- ☐ Add grease to chassis parts
- ☐ Replace oil filter of engine
- ☐ Replace fuel filter of engine

Check and repair

- ☐ Replace filter element of oil filter (excluding bypass oil filter)
- ☐ Clean-up filter element of air filter
- ☐ Clean-up filter screen of fuel transfer pump
- ☐ Check engine operation
- ☐ Check injection timing
- ☐ Check fan belt
- ☐ Check coolant volume
- ☐ Check clutch
- ☐ Check shift mechanism of gearbox
- ☐ Tighten fixing bolt of flange fork for driving shaft
- ☐ Tighten fixing bolt of intermediate bearing for driving shaft
- ☐ Check wheel turntable
- ☐ Tighten wheel nuts
- ☐ Check steering mechanism
- ☐ Check steering wheel
- ☐ Check foot brake
- ☐ Check air reservoir
- ☐ Check if parking brake is normal
- ☐ Check damper
- ☐ Check lighting equipment
- ☐ Check instrument board
- ☐ Check battery
- ☐ Check if there is leakage of fuel, oil, compressed air.

Operation Instructions

Check and Repair

In order to drive vehicle safely and economically, normal check and repair should be carried out periodically based on the recommended items in this section.

►Maintenance period

- To ensure safety drive and maximum economical efficiency,periodic check and repair should be carried out at distribution place of Hualing heavy truck, based on period table of maintenance.
- For repair that needs tool or special tool, please contact with service station of Hualing heavy truck dealer.

►Repair

J: Check, clean, and correct or replace if necessary
T: Adjust
H: Replace
N: Retighten to specified torque
R: Lubricate

- Accord: Under rigorous driving conditions, such as bad, dusty, muddy, moist road and saline soil, you should repair frequently. Please refer to section “period table of maintenance under rigorous driving conditions”

►Period table of maintenance

J: Check, clean, and correct or replace if necessary
H: Replace
N: Retighten to specified torque
T: Adjust R: Lubricate

Count based on initial arrival mileage or month (which comes first)

Technical maintenance period ×1000 km	Initial 3	Every 5	10	20	40	Period
engine						
● engine oil	H	-	-	H	-	or every six month
engine start and abnormal noise	-	J	-	-	-	or every month
idle speed and acceleration	-	J	-	-	-	or every month
● filter element of air filter	-	(after clean-up 6 times)			H	or every year
intake and exhaust manifold	N	-	-	-	N	or every year
valve clearance	T	-	-	-	T	or every year
compressed pressure of each cylinder	-	-	-	-	J	or every year
oil pollution	-	-	-	H	-	or every six month
● filter element of main oil filter	-	-	-	H	-	or every six month
● filter element of by-pass oil filter	-	-	-	H	-	or every six month
filter element of main fuel filter	-	-	-	-	H	or every year
filter element of prefilter	-	-	-	-	H	or every year

►Period table of maintenance

J: Check, clean, and correct or replace if necessary
H: Replace
N: Retighten to specified torque
T: Adjust R: Lubricate

Count based on initial arrival mileage or month (which comes first)

Technical maintenance period ×1000 km	Initial 3	Every 5	10	20	40	Period
inside of fuel tank	-	-	-	J	-	or every six month
injection pressure and spray condition	-	-	-	J	-	or every six month
injection timing	-	-	-	J	-	or every six month
filter screen of oil transfer pump	-	-	J	-	-	or every three month
function of air compressor, governor and release valve	-	-	-	-	J	or every year
function of the cap of auxiliary water tank for radiator	J	J	-	-	-	or every month
damage condition for fan belt	J	J	-	-	-	or every month
● exhaust pipe and installation	-	J	-	-	-	or every month
radiator coolant		(replace every year: H)				
turbocharger						
joint and gasket for air feeder	-	J	-	-	-	or every month
gasket and oil ring for air seal	-	-	-	-	H	or every year

►Period table of maintenance

J: Check, clean, and correct or replace if necessary

H: Replace

N: Retighten to specified torque

T: Adjust

R: Lubricate

Count based on initial arrival mileage or month (which comes first)

Technical maintenance period ×1000 km	Initial	Every				Period
	3	5	10	20	40	
clutch						
clutch oil	-	-	-	-	H	or every year
function of clutch	-	J	-	-	-	or every month
free and working stroke of clutch pedal		J	-	-	-	or every month
gearbox						
● gear oil for gearbox	H	-	-	-	H	or every year
driving shaft						
if connection is loose or not	-	-	-	J	-	or every year
● wear condition of universal joint and spline	-	-	-	-	J	or every year
looseness of bearing and related components	-	-	-	-	J	or every year
rear axle						
● gear oil for differential	H	-	-	-	H	or every year
● gear oil for TDA center differential	H	-	-	-	H	or every year

►Period table of maintenance

J: Check, clean, and correct or replace if necessary

H: Replace

N: Retighten to specified torque

T: Adjust

R: Lubricate

Count based on initial arrival mileage or month (which comes first)

Technical maintenance period ×1000 km	Initial	Every				Period
	3	5	10	20	40	
damage and deformation of rear axle housing	-	-	-	-	J	or every year
front axle						
damage and deformation	-	-	-	-	J	or every year
suspension						
● saddle clamp bolt & nut of steel plate spring	N	-	-	-	N	or every year
damage of spring	-	J	-	-	-	or every month
unbalance of steel plate spring caused by fatigue	-	-	-	-	J	or every year
looseness and damage of installing position	-	-	-	J	-	or every six month
dis-alignment of axis of steel plate spring	-	-	-	-	J	or every month
oil leakage and damage of damper	-	-	-	J	-	or every six month
installing position of damper is loose	-	-	-	J	-	or every six month
wheel						
lubricant of bearing for rear wheel hub and front wheel hub	-	-	-	-	H	or every year

►Period table of maintenance

J: Check, clean, and correct or replace if necessary

H: Replace N: Retighten to specified torque

T: Adjust R: Lubricate

Count based on initial arrival mileage or month (which comes first)

Technical maintenance period ×1000 km	Initial 3	Every				Period
		5	10	20	40	
if eyewinker is clipped	-	J	-	-	-	or every month
tightening wheel nut	N(★)	N	-	-	-	or every month
damage of rim	-	J	-	-	-	or every month
looseness of front hub bearing	-	-	-	J	-	or every six month
looseness of rear hub bearing	-	-	-	J	-	or every six month
steering system						
power steering fluid	-	-	-	-	H	or every year
looseness of installing position	-	-	-	J	-	or every six month
The maximum free stroke of the bearing	-	-	-	-	J	or every year
● damage, looseness, and excessive clearance of steering gear connection	J	-	-	J	-	or every six month
clearance between steering knuckle and front axle	-	-	-	-	J	or every year
front wheel location	-	-	-	-	J	or every year
left and right turning circle	-	-	-	-	J	or every year

►Period table of maintenance

J: Check, clean, and correct or replace if necessary

H: Replace N: Retighten to specified torque

T: Adjust R: Lubricate

Count based on initial arrival mileage or month (which comes first)

Technical maintenance period ×1000 km	Initial 3	Every				Period
		5	10	20	40	
clearance between king pin and bearing	-	-	-	-	J	or every year
main brake						
function of control valve system	J	J	-	-	-	or every month
leakage and damage of pipeline; looseness of connecting position	-	J	-	-	-	or every month
excessive wear for FAB wheel brake cam	-	J	-	-	-	or every month
stroke of push rod for FAB brake chamber	-	J	-	-	-	or every month
function of FAB brake chamber	-	-	-	-	J	or every year
● wear of FAB friction lining	-	J	-	-	-	or every month
● friction and damage of brake drum	-	-	-	-	J	or every year
replacing brake hose	-	-	-	-	H	or every year
checking brake hose (damage, looseness)	-	J	-	-	-	or every month
OPT air drier	-	-	-	J	-	or every six month
OPT air drier	-	(replace desiccant after driving for 100000 km)				or every year

►Period table of maintenance

J: Check, clean, and correct or replace if necessary
H: Replace
N: Retighten to specified torque
T: Adjust
R: Lubricate

Count based on initial arrival mileage or month (which comes first)

Technical maintenance period ×1000 km	Initial	Every				Period
	3	5	10	20	40	
parking brake						
function of FAB control valve system	J	J	-	-	-	or every month
wear of FAB friction lining	-	-	-	-	J	or every year
stroke of push rod of FAB spring brake chamber	-	-	-	-	J	or every month
wear and damage of FAB brake drum	-	-	-	-	J	or every year
OPT air conditioner						
air conditioner filter	-	J	-	-	-	or every month
overturn of cab						
pump oil of hand, electro-hydraulic cab		replace every two year: H				
electric equipment						
specific gravity of electrolyte	-	-	-	J	-	or every six month
function of starter	-	-	-	J	-	or every six month
function of generator	-	J	-	-	-	or every month

►Period table of maintenance

J: Check, clean, and correct or replace if necessary
H: Replace
N: Retighten to specified torque
T: Adjust
R: Lubricate

Count based on initial arrival mileage or month (which comes first)

Technical maintenance period ×1000 km	Initial	Every				Period
	3	5	10	20	40	
damage of electric wiring lug, looseness of connecting position	-	J	-	-	-	or every month
wear of starter wiper	-	-	-	-	J	or every year
wear of generator wiper	-	-	-	-	J	or every year
(excluding starter having no wiper)						

►Period table of maintenance under rigorous driving conditions Count based on initial arrival mileage or month (which comes first)

Driving environment and condition

A: Tow trailer

B: Shuttle frequently at short distance

C: Drive on cragged road

D: Drive on muddy road

E: Drive in cold climate and on saline soil

Item	Repair	Rigorous driving condition	Driving environment					
			A	B	C	D	E	B+E
filter element of main oil filter	replace	every 10000 km or every 3 month	●		●	●		
filter element of by-pass oil filter	replace	every 10000 km or every 3 month	●		●	●		
filter element of air filter	replace	every 20000 km or every six month(after cleaning six times)			●			
intake and exhaust manifold	retighten	every 2500 km		●				
gear oil for gearbox	replace	every 20000 km or every six month	●	●				
gear oil for differential	replace	every 20000 km or every six month	●	●				
damage, looseness, and excessive clearance of steering gear connection	check	every 10000 km or every 3 month		●				

►Period table of maintenance under rigorous driving conditions Count based on initial arrival mileage or month (which comes first)

Driving environment and condition

A: Tow trailer

B: Shuttle frequently at short distance

C: Drive on cragged road

D: Drive on muddy road

E: Drive in cold climate and on saline soil

Item	Repair	Rigorous driving condition	Driving environment					
			A	B	C	D	E	B+E
wear of friction lining of front & rear brake	check	every 2500 km	●	●	●	●		
wear and damage of front & rear brake drum	check	every 20000 km or every six month	●	●	●	●		
saddle clamp bolt & nut of steel plate spring	retighten	every 20000 km or every six month		●				
wear of universal joint and spline	check	every 20000 km or every six month		●				

Appendix: Common Troubles of CAMC Automobile

Cab

► Cab unable to tilt

Firstly, judge the tilter installed into the cab is of Jiuyang or of Zhong'ou. For Jiuyang tilter, check the causes from following items:

① Motor at soundless state

a. Check fuse F6, HCF-5.
b. Check the lifting-control switch of the motor
c. Check whether the tilting completion switch is powered on
d. Check the neutral gear shifting switch (to confirm that the buzzer works)
e. Check the electric tilting switch
f. Check the electric tilting relay (to confirm whether the motor is damaged)

② Motor at sound state

a. With air or with oil shortage in tilting motor
b. Internal leakage, damage or low pressure of tilting motor oil pump
c. Internal leakage or valve blocking of tilting cylinder
d. Check whether the cab can be jacked up

For Zhong'ou tilter, check the causes from following items:
① Check whether the motor has sound
② Check fuse, relay and button switch
③ Check for air or oil shortage
④ Check whether the oil pipe is blocked and whether the oil cylinder has internal leakage

► The Door Glass unable to lift

If the door glass can't be lifted, judge from the following items:
① Check whether the door glass lifter fuse and circuit are normal.
② Check whether the switch and the door glass controller are normal.
③ Check whether the lifter motor is powered on or burned and check whether the lifter cable is broken or gets stuck.
④ Check whether the fixing bolts of the glass track and that of glass are loosened and check whether the glass track is normal.

► Abnormal sound in cab

Abnormal sound in cab shall be judged from the following points:
① Check whether the locking mechanism for tilting is in good condition.
② Check whether the buffer rubbers on both sides of the portal frame touch and match completely.
③ Check whether the front and rear shock absorbers are failed to work.

④ Check whether all the connection parts of the cab become loosened or damaged (whether the connection between Zhong'ou tilting oil cylinder and the cab becomes loosened. Because there is no connection hinge at the connection between the oil cylinder and the cab, causing that the cab can't be buffered and that the top end of the oil cylinder collides with the cab, then a buffer rubber should be added on the end).
⑤ Check whether the front wheel fender is in friction with front wheel.

► Water leaking in cab

Water leaking in cab shall be judged from the following points:
① Check whether the sealing of the speed meter indicating lamp is good.
② Check whether there is water leakage in skylight, replace it or apply with glass cement.

Engine

► Impossible startup of engine

Impossible startup of engine shall be judged from the following points:

① Electric circuit

a. Check whether the battery has power.
b. Check whether connection of the fuse, starting switch, starting relay, main power relay, starter attracted-iron switch, starter coil and carbon brush, multi-function timer, startup line are completely secure.
c. Check whether ECU is damaged.

② Oil passage

a. Check whether the fuel pump oil supply passage is blocked (check filter element, oil-water separator).
b. Check whether the oil supply pump (manual oil pump) is damaged.
c. Check whether the oil pump fuel return valve (fuel return screw) is damaged.
d. Check whether there is air in HP, LP oil passage.

③ Mechanism

a. Check air distribution timing, oil injection timing.
b. Check whether the starter gear and the flywheel gear are damaged.
c. Check whether the flywheel gear ring is slipping.
d. Check whether the exhaust braking is turned OFF.
e. Oil pump rack is jammed or trunk-piston worn, oil nozzle not working.

► Black smoke from engine

The methods for judging black smoke from engine are as follows:
① Check whether air intake of the filter element is free.
② Check whether the turbocharger is damaged.
③ Check whether the fuel injection timing is lagging.
④ Check whether the fuel injection quantity is excessive.
⑤ Check whether the fuel nozzle pressure is too low, whether the atomization is not good.

⑥ Cylinder compression ratio not enough, fuel cannot be combusted completely.
⑦ For engine with fuel electronic control system (whether there is fault for ECU, prestroke, electronic sub-governor).
⑧ Whether the exhaust brake valve is at closed state.

► White smoke from engine

The methods for judging white smoke from engine are as follows:
① Fuel injection timing of engine is early.
② Moisture content in fuel is too high.
③ Check whether the cylinder gasket is damaged (slight amount of water in cylinder).
④ Check whether ECU and prestroke of the engine with fuel electronic control system is damaged.

► Blue smoke from engine

The methods for judging blue smoke from engine are as follows:
① Check whether consumption of the engine oil is reduced, whether it fires oil.
② Whether the piston ring, cylinder sleeve is worn.
③ Whether the valve oil seal is damaged.
④ Whether the turbocharger has internal leaking or been damaged.
⑤ Whether the crankcase breather is blocked, crankcase air pressure increased.

► Exhaust brake not working

The methods for judging exhaust brake not working are as follows:
① Check the fuse and relay.
② Check whether the clutch switch, throttle switch, neutral position switch, exhaust brake switch are in good condition.
③ Check whether the exhaust brake valve cylinder and the three-way (solenoid) valve are in good condition.
④ Check whether ECU is damaged for engine with ECU.
⑤ Check whether the exhaust brake cylinder, flap are jammed, damaged, whether the fixing bolt comes off.

► Engine power insufficient due to fuel system

Position to check	Fault causes	Countermeasures
Fuel pipeline	Blocked due to dirty fuel	Clean the fuel pipe or replace the fuel pipe
Fuel filter element	Filter element blocked	Replace the fuel filter element
Fuel pump	Fuel outlet leaking, piston leaking	Replace the damaged part

► Starter unable to run

Position to check	Fault causes	Countermeasures
Battery	Cable head loosened, or rusted	Clean the head, and tighten the head
	Battery discharging, electric quantity weakened	Charge or replace the battery

Fuse	Fuse short-circuited	Replace the fuse
Starting switch	Starting switch and starting relay damaged	Replace the switch or relay
Starting motor	Attracted-iron switch and relay damaged	Repair or replace the attracted-iron switch
	Motor damaged	Repair or replace the motor

► Starter able to work, but engine unable to run

Position to check	Fault causes	Countermeasures
Battery	Cable head loosened, or rusted	Clean the head, and tighten the head
	Battery discharging, electric quantity weakened	Charge, or replace the battery
Starting motor	Motor pinion damaged	Replace the pinion
	Attracted-iron switch damaged	Repair, or replace the attracted-iron switch
	Brush worn, spring weakened	Replace the brush, or the spring
Engine	Pulling of piston, crankshaft bearing blocked	Repair and replace the related parts
	Other parts damaged	Replaced the damaged parts

► Engine unable to start again after stopping running

Position to check	Fault causes	Countermeasures
Fuel system	Fuel pipeline has air	Remove the air by fuel supply pump
Engine stop mechanism	Engine stop mechanism out of work	Replace the engine stop mechanism
	Control line adjustment incorrect	Re-adjust the control line
Electrical control system	Error occurred	Check and repair electric circuit

► Fuel unable to enter the injection pump, resulting in engine unable to start

Position to check	Fault causes	Countermeasures
Fuel	No fuel in the fuel tank	Fuel up
Fuel pipeline	Fuel pipeline blocked, or damaged	Repair, or replace the damaged part
	Connector loosened	Replace the seal, fasten the connector
Fuel filter	Fuel filter blocked	Replace the fuel filter
Fuel system	Fuel system has air	Repair the leaking, and remove the air

Fuel supply pump	Fuel supply pump filter screen blocked	Clean the fuel supply pump filter screen
	Fuel supply pump out of work	Repair, or replace the fuel supply pump

► Fuel entered the injection pump, engine unable to start

Position to check	Fault causes	Countermeasures
Engine stop button	Stop button not returned	Repair, make the stop button return to normal place, clear the error record
	Ignition switch unable to return to OFF position	Pull the ignition switch to ACC position, start again
		Clear the error record on the recorder
Control unit	Poor connection contact	Check and re-connect
Fuel	Fuel brand not matching with ambient temperature	Select correct fuel brand
	Fuel contains water	Replace the fuel
Fuel system	Air entered the injection pump	Use fuel supply pump to remove air in the fuel
Injector	Fuel nozzle sintered, dripping, poor atomization	Replace the fuel nozzle
	Fuel injector has low pressure while opening.	Adjust or replace the fuel nozzle
Fuel injection pump	The control rack of fuel injection pump out of work	Repair or replace

► Engine idle unstable

Position to check	Fault causes	Countermeasures
Engine stop button	Stop button not return	Repair, make the stop button return to normal place
		Pull the ignition switch to ACC position, and restart
		Clear the error record on the recorder
Fuel system	Fuel system leaking or blocked	Repair or replace the damaged part
	Fuel system has air	Use fuel supply pump to remove the air from the fuel system
	Water entered the fuel system	Drain dirty liquid or replace fuel

Fuel filter	Pollutants blocked the fuel filter	Replace the filter or the filter element
Idle control system	Switch or wire error	Check the control system
Acceleration control system	Acceleration control system adjustment incorrect	Adjust the acceleration control system
Fuel nozzle	Fuel nozzle sintered	Replace the fuel nozzle
	Fuel nozzle open pressure low Injection condition incorrect	Correct and replace the fuel nozzle
Fuel injection pump	Fuel outlet valve failed to work, there are oil drops after fuel injection	Replace the oil outlet valve
	Injection timing adjustment incorrect	Adjust the injection timing
	Insufficient fuel injection	Adjust the fuel amount
	Piston spring damaged	Replace the piston spring
	Piston worn	Replace the piston
	Fuel pump camshaft worn	Replace the camshaft
	Tappet worn	Replace the tappet
Air valve clearance	Air valve clearance adjustment improper	Re-adjust the air valve clearance
Cylinder compression pressure	Cylinder gasket damaged	Replace the related damaged parts
	Cylinder sleeve and piston ring worn	
	Air valve and valve seat seal not tight	
Engine support cushion	Damaged	Replace
Camshaft	Camshaft flange worn	Replace the camshaft

► Engine power insufficient

Position to check	Fault causes	Countermeasures
Air filter	Air filter blocked	Clean or replace the air filter
Fuel	There are water and foreign matters in fuel	Replace the fuel
Electric control system	Error occurred	Check the fault code, check the electric circuit
Fuel filter	Filter element blocked	Replace the fuel filter or filter element
Fuel supply pump	Screen blocked or fuel supply pump failed to work	Repair or replace the fuel supply pump
Fuel nozzle	Fuel nozzle sintered	Replace the fuel nozzle
	Fuel nozzle open pressure low Injection condition incorrect	Correct and replace the fuel nozzle
Fuel injection pipe	Fuel injection pipe damaged or blocked	Replace the fuel injection pipe

Position to check	Fault causes	Countermeasures
Fuel injection pump	Fuel outlet valve failed to work, there are oil drops after fuel injection	Replace the oil outlet valve
	Fuel injection timing adjustment incorrect	Adjust the fuel injection timing
	Piston worn	Replace the piston
	Fuel pump camshaft worn	Replace the camshaft
	Tappet worn	Replace the tappet
Supercharger	Supercharger compensation pipe damaged or cracked	Replace the supercharger pipe
	Exhaust too less, intake insufficient	Repair or replace the related parts
	Supercharger damaged	Replace the supercharger
Cylinder compression pressure	Cylinder gasket air leaking	Replace the related part
	Cylinder sleeve piston ring worn, sintered, damaged	
	Installation incorrect	
Air valve clearance	Air inlet and exhaust valve clearance incorrect	Adjust the air valve clearance
Air valve spring	Air valve spring become weak or damaged	Replace the air valve spring
Exhaust system	Exhaust pipe carbon deposited and blocked	Clear the exhaust pipe carbon deposit
Camshaft	Camshaft flange worn	Replace the camshaft

► Too much fuel consumption

Position to check	Fault causes	Countermeasures
Fuel system	Fuel leaking	Repair and replace the related parts of the fuel system
Air filter	Air filter blocked	Clean or replace the air filter
Thermostat	Damaged	Replace
Engine oil	Oil viscosity too thick or too thin	Use oil with correct brand
Fuel nozzle	Fuel nozzle injection pressure too low, atomization not good	Adjust or replace the fuel nozzle
Fuel injection timing	Injection advance or lag	Adjust the fuel injection timing
Electric control system	Error occurred	Check the fault code, clear the fault
Exhaust brake system	Exhaust brake valve opening not sufficient	Correct or replace
Braking	Time delay fault or speed reducer fault	Check, repair, or replace

Position to check	Fault causes	Countermeasures
Supercharger	Air leaking	Repair the supercharger
	Supercharger damaged	Replace the supercharger
Air valve clearance	Air valve clearance adjustment improper	Re-adjust the air valve clearance
Cylinder compression pressure	Cylinder gasket damaged	Replace the related parts
	Cylinder sleeve and piston ring worn	
	Air valve and valve seat seal not tight	
Air valve spring	Air valve spring weakened, damaged	Replace the air valve spring

► Too much oil consumption caused by engine

Position to check	Fault causes	Countermeasures
Engine oil	Too much oil filled	Fill oil as specified
Oil seal and gasket	Oil leaking from oil seal and gasket	Replace the oil seal and gasket
Breather	Breather blocked	Clean the breather
Air intake exhaust valve and air valve guide	Valve stem and valve guide worn	Replace the air valve and valve guide
Valve stem oil seal	Valve stem worn, oil seal leaking	Replace the valve stem and oil seal
Cylinder compression pressure	Cylinder gasket air leaking Cylinder sleeve and piston ring worn, Air valve and seat installation incorrect	Replace the related parts
Supercharger	Sealing ring worn or damaged	Replace
Air compressor	Piston ring worn or damaged	Replace

► Engine overheated

Position to check	Fault causes	Countermeasures
Cooling water	Cooling water insufficient	Add cooling water
Clutch fan	Clutch fan silicone oil leaking	Replace the clutch fan
Fan belt	Slipping caused by loosened fan belt	Replace the fan belt
Radiator	Radiator cap failed to work or middle part blocked	Replace the radiator cap, clean the radiator
Water pump	Water pump failed to work	Repair or replace the water pump
Cylinder head and cylinder block plug	Cooling water leaking caused by plug failure	Replace the plug
Thermostat	Thermostat failed to work	Replace the thermostat
Cooling system	Cooling system clogged by foreign matters	Clean and remove the foreign matters

Position to check	Fault causes	Countermeasures
Injection timing	Injection timing adjustment improper	Adjust the injection timing

► Oil pressure not high

Position to check	Fault causes	Countermeasures
Engine oil	Oil viscosity not correct, oil quantity not sufficient	Replace the oil, fill up to the specified scale
Oil pressure gauge or indicating lamp	Oil pressure gauge failed to work	Repair or replace the oil pressure gauge
	Oil indicating lamp not lit	Replace the indicating lamp
Oil filter	Oil filter blocked	Replace the oil filter element and bypass filter element
Safety valve and bypass valve	Safety valve sintered	Replace the safety valve
	Bypass valve spring becomes weak.	Replace the bypass valve spring
Oil pump	Oil pump strainer blocked	Clean the oil pump strainer
	Oil pump worn	Replace the oil pump
Rocker shaft	Rocker shaft bush worn	Replace the rocker shaft bush
Camshaft	Camshaft and bearing worn	Replace the camshaft and bearing
Crankshaft and bearing	Crankshaft and bearing worn	Replace the crankshaft and bearing
Lube oil spray control valve	Lube oil spray valve not closed tightly	Replace the lube oil control valve

► Abnormal noise of engine

1. Engine having slap?

Position to check	Fault causes	Countermeasures
Fuel	Fuel used not correct	Select fuel of correct brand
Injection timing	Fuel injection timing advanced	Adjust the injection timing
Fuel nozzle	Injection pressure not correct, fuel atomization not good	Correct or replace the fuel nozzle
Cylinder compression pressure	Cylinder gasket leaking, piston ring damaged	Replace the cylinder gasket or piston ring
Fuel injection pump	Fuel nozzle defect	Replace the fuel nozzle
	There are oil drops after fuel injection	

2. Noise caused by exhaust leaking

Position to check	Fault causes	Countermeasures
Exhaust pipe	Exhaust pipe connection loosened	Tighten the exhaust pipe connection

Position to check	Fault causes	Countermeasures
	Exhaust pipe damaged	Replace the exhaust pipe
Fuel nozzle or preheating plug	Fuel nozzle or preheating plug loosened, leaking	Replace the gasket, tighten the fuel nozzle or preheating plug
Exhaust manifold	Exhaust manifold connection loosened	Tighten the exhaust manifold
Cylinder head gasket	Cylinder gasket damaged	Replace the cylinder gasket

3. Continuous noise caused by engine

Position to check	Fault causes	Countermeasures
Fan belt	Belt loosened	Check and adjust the belt tension
Cooling fan	Cooling fan loosened	Tighten the cooling fan
Water pump bearing	Water pump bearing worn or damaged	Replace the water pump bearing
Generator bearing	Generator bearing worn or damaged	Replace the generator bearing
Air valve clearance	Intake/exhaust valve clearance adjustment improper	Adjust the air valve clearance

4. High abnormal noise when engine running fast

Position to check	Fault causes	Countermeasures
Air valve clearance	Intake/exhaust valve clearance adjustment improper	Adjust the air valve clearance
Rocker	Rocker damaged	Replace the rocker
Crankshaft thrust bearing	Crankshaft and bearing worn or damaged	Replace the crankshaft or bearing
Crankshaft and connecting rod bearing	Crankshaft and connecting rod bearing worn	Replace the crankshaft or connecting rod bearing
Connecting bush and piston pin	Connecting rod bush worn	Replace the connecting rod bearing
Piston and cylinder sleeve	Piston and cylinder sleeve worn	Replace the piston and cylinder sleeve
	Foreign matters entered the cylinder sleeve	

► Generator fault?

1. Battery electricity used up

Position to check	Fault causes	Countermeasures
Drive belt of generator	Loosened	Adjust the belt tension
Battery electrolyte	Too low	Add
Battery terminal	Terminal open circuit or internal open circuit	Replace the battery
Fuse	Burnt out	Replace the fuse
Fuse-base and fuse	Poor contact	Repair

Position to check	Fault causes	Countermeasures
Specific percentage of electrolyte	Incorrect	Adjust the electrolyte concentration
Starter switch and regulator wiring	Element damaged or poor contact	Repair
Generator and regulator wiring	Element damaged or poor contact	Repair
Generator grounding line	Disconnected	Repair
Regulator voltage	Not correct	Repair
Diode circuit	Damaged	Repair
Generator stator coil	Coil grounded or damaged	Repair or replace the stator coil
Generator rotor coil	Damaged	Repair
Power load	Too heavy	Check the power generation capacity at rated speed

2. Battery overcharged

Position to check	Fault causes	Countermeasures
Wiring and cable head	Line contact not good or open-circuited	Wire correctly
Voltage regulator	Poor grounding	Repair
	Voltage regulating too great	Re-adjust
	Regulator damaged	Replace the regulator

3. Charging indicator lamp flashing or voltmeter indication fluctuating

Position to check	Fault causes	Countermeasures
Fan belt	Belt loosened	Adjust
Starting switch	Poor switch contact	Replace the starting switch
Related wiring	Poor contact or damaged	Re-connect or replace the wire

4. Charging indicator lamp is ON, but not lit when the generator is running

Position to check	Fault causes	Countermeasures
Starter switch wiring	Loosened	Re-connect
Generator and fuse wiring	Wire impedance too high	Replace the wire
Starter switch contact point	Damaged	Replace the starter switch

5. Abnormal noise of generator

Position to check	Fault causes	Countermeasures
Generator bearing	Bearing damaged	Fill grease or replace the bearing

Position to check	Fault causes	Countermeasures
Generator stator coil	Coil wire exposed	Replace the stator coil
	Coil short-circuit	Replace the stator coil
Generator belt	Belt loosened	Adjust the belt tension
Diode	Damaged	Replace
Generator rotor	Rotor interferes with stator	Repair

6. Fuse burnt out by charging circuit

Position to check	Fault causes	Countermeasures
Terminal	Grounded	Repair
Generator diode Voltage regulator	Damaged	Replace the diode
	Exceeded the specified value	Replace the regulator
Battery connection	Wiring inversed	Connect correctly

7. Battery not charged at all

Position to check	Fault causes	Countermeasures
Battery	Battery damaged	Replace
Regulator	Regulator terminal not connected or loosened	Repair
	Regulator broken	Replace
Generator	Generator coil opened, grounded or short-circuited, or diode damaged	Replace
Line	Wire or ammeter opened, short-circuited or poor contacted	Repair

8. Battery not charged fully

Position to check	Fault causes	Countermeasures
Battery	Battery damaged	Replace
Line	Wire opened, short-circuited or contact not good	Repair
Generator belt	Generator driving belt loosened	Adjust the belt tension
Generator	Delaminated short-circuit existing in stator coil	Replace
	Diode damaged	Replace
	Terminal contact not good	Repair
Regulator	Regulator broken	Replace
	Regulator terminal not connected or loosened	Repair

9. Current not stable while charging

Position to check	Fault causes	Countermeasures
Line	Line opened, poor contacted or will open soon	Repair
Generator	Generator driving belt loosened	Adjust the belt tension
	Stator coil will become short-circuited or open soon	Repair
	Terminal contact not good	Repair
Regulator	Regulator broken	Replace
	Regulator terminal not connected or loosened	Repair

► The fault of starting motor

1. Starter and attracted-iron switch unable to operate

Position to check	Fault causes	Countermeasures
Battery	Battery electrolyte level too low	Add electrolyte
	Low percentage of battery electrolyte	Charge or replace the electrolyte
	Battery switch contact not good	Replace
Ignition switch	Ignition switch damaged	Replace
Starter electromagnetic switch	Attracted-iron coil and iron core out of work	Replace
	Attracted-iron switch coil damaged	Replace
	Stator (field) coil damaged	Replace
Starter	Rotor coil damaged	Replace
	Fixed coil damaged	Replace

2. Electromagnet-switch operating, starting motor failing to run

Position to check	Fault causes	Countermeasures
Battery	Battery electrolyte level too low	Add electrolyte
	Low percentage of battery electrolyte	Charge or replace the electrolyte
Starting circuit	Poor contact	Repair
Electromagnetic switch cable head	Poor contact	Replace the cable head
Motor shaft sleeve	Sleeve worn	Replace the sleeve
Motor rotor	Rotor short-circuited	Repair or replace the rotor
Starting relay	Poor contact of starter relay contact point or inserted terminal	Repair or replace

3. Slow rotating speed of starter

Position to check	Fault causes	Countermeasures
Electromagnetic circuit switch	Poor contact	Repair
Motor shaft sleeve	Shaft sleeve worn out seriously	Replace
Motor rotor	Rotor coil short-circuited	Repair or replace

4. Starter running, but engine unable to start

Position to check	Fault causes	Countermeasures
Motor pinion	Motor gear and flywheel gear not engaged	Repair or replace motor clutch and connecting rod
Overrunning clutch	Slipping	Replace
Motor shaft sleeve	Worn out seriously	Replace

5. Abnormal noise from starter motor

Position to check	Fault causes	Countermeasures
Motor shaft sleeve	Worn out seriously	Replace
Motor gear and driving device	Worn out seriously	Replace the overrunning clutch and the driving device
	Clutch jammed	Lubricate or replace the overrunning clutch
Overrunning clutch internal gear	Worn out seriously	Replace the overrunning clutch
Motor shaft sleeve	Worn out seriously	Replace

6. Pinion advancing but not engaged with the ring gear

Position to check	Fault causes	Countermeasures
Battery	Battery capacity low	Charge the battery
Motor gear and flywheel gear	Pinion or ring gear teeth worn	Replace the pinion/ring gear
	Pinion shaft stuck with dust, jammed	Lubricate or repair

7. Motor started after the pinion and ring gear engaged, but the engine not running

Position to check	Fault causes	Countermeasures
Starter	Clutch slipping	Replace the clutch or starter
Flywheel gear ring	Reduction gear broken	Replace the reduction gear or starter
	Flywheel gear damaged	Replace the flywheel gear ring

8. Pinion and ring gear engaged, but the engine not running

Position to check	Fault causes	Countermeasures
Battery	Battery capacity low	Charge the battery
Starter	Wiring at terminal loosened	Repair
	Armature or exciting coil short-circuited	Replace the starter
	Rectifier dirty	Clean the rectifier or replace the starter
	Brush spring force weakened or brush worn out	Replace the brush spring or brush

Position to check	Fault causes	Countermeasures
	Bearing locked	Replace the bearing or starter
Electromagnetic switch	Poor contact of electromagnetic switch contact point	Replace the electromagnetic switch

9. After engine started and the starter switch released, the starter motor not stopping running

Position to check	Fault causes	Countermeasures
Starter switch	Starter switch contact point unable to spring back completely	Replace the starter switch
Starter relay Starter electromagnetic switch	Starter relay contact point unable to spring back completely	Replace the starter relay
	Electromagnetic switch coil short-circuited	Replace the electromagnetic switch

► The problem of exhaust turbocharger

1. Output power of engine less than its normal state

Position to check	Fault causes	Countermeasures
Air filter	Air filter blocked	Clean or replace the air filter
Intake pipe and hose	Intake blocked	Repair or replace
Air compressor and intake manifold	Connector loosed and resulting in leaking	Repair
Turbine and exhaust manifold	Connector loosed and resulting in leaking	Repair
Exhaust pipe and muffler	Too much carbon deposition, resulting in clogging	Clean or replace
Crankcase breather	Blocked	Clean or replace
Compressor impeller	Damaged due to bumping	Replace
Turbine wheel	Damaged due to bumping	Replace
	Too much carbon deposition	Replace
Turbocharger rotator	Big resistance or serious wearing	Replace

2. Blue smoke or black smoke out of engine

Position to check	Fault causes	Countermeasures
Air filter or intercooler	Blocked	Clean, repair or replace
Supercharger oil seal	Oil seal leaking	Replace the oil seal
Supercharger oil return pipe	oil return blocked	Repair or replace
Crankcase breather	Blocked	Clean
Compressor impeller	Damaged due to bumping	Replace

Turbine wheel	Damaged due to bumping	Replace
Supercharger lubricating oil passage	Blocked	Clean or replace

3. Oil consumption increased due to supercharger damaged

Position to check	Fault causes	Countermeasures
Crankcase breather	Blocked	Clean
Supercharger oil seal	Oil seal leaking	Replace the oil seal
Supercharger oil return pipe	Oil return blocked	Repair or replace
Compressor impeller	Damaged due to bumping	Replace
Turbine wheel	Damaged due to bumping	Replace
Supercharger lubricating oil passage	Blocked	Clean or replace
Oil pressure	Pressure increased	Replace

4. Exhaust supercharger producing abnormal noise

Position to check	Fault causes	Countermeasures
Intake and exhaust interface	Blocked	Repair
Intake and exhaust system	Damaged	Repair
Interface gasket	Rotating jammed	Replace
Supercharger turning part	Impeller interfered with casing	Repair or replace
Compressor impeller	Impeller damaged	Replace
	Impeller interfered with casing	Repair or replace
Turbine wheel	Wheel damaged	Replace
	Too much carbon deposition in wheel	Clean or replace
Engine oil	Oil level too low	Fill to normal level
	Oil polluted	Replace the oil
Supercharger oil supply pipe	Blocked	Repair or replace
Turbine casing	Too much carbon deposition	Clean
Compressor casing	Too much dirt	Clean
Turbine shaft bearing	Bearing worn	Replace

5. Supercharger turning parts worn seriously

Position to check	Fault causes	Countermeasures
Engine oil	Polluted	Replace

Position to check	Fault causes	Countermeasures
	Oil of incorrect brand used	Replace
Supercharger oil pipe	Oil pipe blocked	Clean or replace
Supercharger oil seal	out of work	Replace
Supercharger casing oil return pipe	Blocked	Clean or replace
Turbine shaft	Having oil sludge and carbon deposition	Replace
Engine lube oil quantity	Lube oil insufficient	Fill to correct position

6. When abnormality or vibration occurred

Position to check	Fault causes	Countermeasures
Supercharger lubrication	The cause is that the bearing has fault or poor contact between the rotating part and the external part. Unable to replace oil, foreign matters entering the oil filling pipe, driving while the oil filter blocked or damaged and repeatedly starting and stopping the vehicle running will all lead to bearing damage.	Check and replace
Supercharger rotating part	If there is no abnormality in the lube oil system, but the damage found is due to the contact between the rotating part and the external part, this is most likely due to unbalance of the rotating part or shaft bent. This is because worn bearing was used or the foreign matters in air damaged the turbine or compressor wheel.	Check and replace

7. Turbocharger function is normal, but the output value decreased

Position to check	Fault causes	Countermeasures
Supercharger	Waste gas leaking	Repair or replace
Muffler	Exhaust resistance become too big due to exhaust pipe muffler deformed or carbon deposited	Repair or replace
Turbine and air filter	Compressor exhaust side leaking or air filter became dirty	Clean or replace
Compressor	Dirty inside the compressor	Clean
	Carbon deposited in rotor shaft	Check or replace

8. Exhaust pipe or intake pipe oil leaking or exhaust becoming white

Position to check	Fault causes	Countermeasures

Supercharger oil return pipe	Oil level increased due to oil distributor getting dirty or blocked	Clean or replace
	Oil drain tube blocked, pressed or deformed	Repair or replace
	Piston ring worn or piston ring groove worn excessively	Replace
	Piston ring damaged due to bearing fault	Repair or replace

► Coolant level warning lamp constantly lit

① **Fault analysis**

Coolant level warning lamp lit can be divided into two statuses. One is false display status (engine water temperature, coolant in expansion jug are normal by site inspection), which is electrical system fault. The other is true display status (coolant is reduced in the expansion jug by site inspection), which is cooling system fault.

② **Test procedure**

1) Electrical fault – the ground signal of instrument warning lamp mainly comes from two points. One is from engine overheat switch, another is from water level sensor.

a. Pull out overheat switch wire card, check the ground signal of overheat switch with digital multimeter. If it says “YES”, replace the switch. If it says “NO”, test the ground signal of switch card wire G/R. If it shows “YES”, test the 12-core G/R ground signal in 16-core socket of the third row of the combined card above the throttle pedal in the cab. If the result is “YES”, it means this point to overheat switch wire grounded. If the result is “NO”, to be continued.

b. Test the ground signal of the14-core R line in 17-core socket of the fourth row of the combined card above the throttle pedal. If it says “NO”, it means that instrument is fault. If it says “YES”, test the ground signal of the 20-core L line in 22-core card of multi-function timer. If the result is “NO”, it means the multi-function timer is fault. If the result is still “YES”, test the ground signal of the 1-core Y/R in 2-core card of the water level sensor. If the result is still “YES”, it means the wire between this point and the multi-function timer card is fault. If the result is “NO”, it means the water level sensor is fault.

c. Main test parts: water level sensor, overheat switch, multi-function timer, instrument.

2) Cooling system fault– check the water quantity in the compensation tank in front of the cab at vehicle ambient temperature, if the water quantity increased, it indicates the coolant flows into the compensation tank through the expansion tank when the engine coolant is heated and expanded. When the engine is stopped at ambient temperature, the coolant in the compensation tank does not flow back to the expansion tank because of vacuum pressure effect. Maintenance concept: one is to reduce the expansion capacity of coolant (coolant temperature not exceeding 95℃). Another is to enhance the return condition of the vacuum pressure.

a. Radiator – when the coolant is at major cycle, touch the tank with palm. The tank is divided into top, middle and bottom sections. If the hand felt temperature difference is big at the same position of the middle and bottom section but the left, middle and right position is different, it may be that the radiator core strip is blocked (the position where hand felt temperature lower is the position the core strip blocked), it can be

disassembled for cleaning.
b. Fan coupler – when the engine water temperature is higher, the temperature difference of the upper and lower water chamber of the radiator is not big, engine speed ≥1800rpm, gentle breeze is felt at the engine side cover, you may inspect the airfoil, replace the coupler.
c. Water pump – coolant is at major cycle, with thermostat opening normal, after idle running for 3min, place the palm at the front middle section of the radiator to feel the temperature, at this time, increase the engine speed to 1800rpm. If the hand felt temperature increases rapidly, it indicates the water pump flow is good, otherwise, repair the water pump and adjust the V belt tension (10kgf)
d. Thermostat – after inspection by referring to C, remove the thermostat and put it into water cup to heat, when the water temperature in the cup reaches 82℃, the thermostat valve must be at initial opening. When the water temperature ≤950C, the valve must be at full open position, lifting ≥10mm.
e. Expansion tank cover – pressure cover sealing rubber gasket must be tightly against the expansion tank mouth, no coolant leaking is allowed, internal pressure valve opening pressure is normal (50±9kpa). Part change method can be used in the field.
f. Open the expansion tank cover, increase the engine speed to 2000rpm under hot vehicle status and maintain for 3min to check whether there is air bubble in the tank. YES, check the parts like cylinder gasket.
g. With the vehicle at ambient temperature, watch each connection rubber hose of the cooling system for volume change due to deformation (sunken), and whether the vacuum pressure is decreased and coolant return affected.
h. If the installation condition permits, the water level difference between the compensation tank and the expansion tank can be reduced properly.
i. With the engine water temperature normal, expansion tank coolant shorted, and the compensation tank water level normal, you may check whether each part of the cooling system is leaking, such as, air warming radiator, radiator, connecting rubber hose, pump water seal, air compressor upper cover.

► Oil increasing phenomenon during engine running

① **Fault analysis**

During running of engine, oil plays the role of lubricating, cleaning, sealing, cooling, and buffering. Of which, slight amount of oil will whisk into combustion chamber to fire through piston ring, valve oil seal, etc., or leak through air compressor and lubrication part oil seal, gasket, its consumption capacity is proportional to the engine running time and performance, therefore, oil increasing belongs to abnormal phenomenon. For such phenomenon, we analyzed there are two possible factors, one is engine coolant entered the engine sump, the other is fuel entered.

② **Test procedure**

Pull out the engine oil scale and take proper amount of oil to watch its color, if it is in white, it indicates the oil is emulsified by the coolant. There is leakage between the cooling system and the lubrication system. You may check the parts like oil cooler, air compressor, cylinder gasket sealing performance, wet cylinder sleeve water seal, cylinder body casting easting pit (such phenomenon is few). If the oil color remains unchanged, you may check its viscosity, if the viscosity becomes thin, fuel may enter. Then you may make suction examination in the field, the method is as follows: take a piece of white paper, take 2 ~ 3 drops of oil from the engine sump with oil scale and drop them on the white paper, watch its oil drop pattern edge

within 5min, if the edge pattern is faint and dispersed in irregular pattern, fuel may be mixed in the oil. At this time, you may check mainly the piston sealing performance of the fuel supply pump in the injection pump, oil return pipe of the injector part (6WF1 oil return pipe is hidden in valve rocker chamber cover cap), injector piston needle valve coupling part dripping, etc.

Oil cooler

Taken from the cylinder for pressure airtight test

Air compressor

As there is cooling water channel in its upper cover, when the casing has sand hole, coolant is very liable to flow into the engine sump, you may make pressure airtight test.

Cylinder gasket sealing

Ask whether high temperature occurred during previous service of the engine, e.g., high temperature caused by poor radiating of water tank, poor working condition of silicon oil fan coupler and long time running at high temperature. At this time, you may check the cylinder head bolt tightening torque, if too low, disassemble the cylinder head to watch carefully the cylinder gasket water seepage print (adjacent place of each cylinder oil return hole and water channel hole). Give serious consideration when determining this operation.

Cylinder liner water seal

With engine flame out at hot state, coolant level normal, remove the engine sump, place a plastic film under the crankcase, observe the plastic film for any water drops in 1 hour.

Cylinder block

Pressure gastight test

Injector dripping

Adopt oil cut-off method of cylinder-by-cylinder when engine is running at idle state, when an oil of a cylinder cut-off, engine running speed not changed obviously, remove the injector of this cylinder and make a bench test. When the field condition not permitted, injection pump may be used, with fuel nozzle connection exposed, start the motor to run the engine and observe whether it is dribbling.

Injector oil return pipe

Remove the engine valve chamber hood, fill pressure gas into oil return pipe, use foam to check external pipe for leaking.

Injection pump

Method of new part replacement test (mainly check the plunger O ring in the fuel supply pump).

③ Oil increasing quantity or consumption quantity measurement

a. Park the vehicle to be tested at flat ground, pull up the parking brake. Engine stops at hot state.

b. Screw off the sump drain plug, drain the oil to a clean container and start timing. Screw in the sump plug after drain for 10min, weigh the oil in the container (assuming the weight value as A kg), then fill it into

the engine.

c. Fill fully the fuel tank and make a position mark, run the vehicle with normal procedure.

d. When the fuel consumption of the fuel tank reaches half or more than 100L, weigh the oil in the container (weight value is assumed as B kg) at the same condition of the original test place, hot state and drain time.

e. Meter the fuel filled to the tank marked position (metering value is assumed as C L).

f. [A-B]÷C=oil consumption capacity kg/L when engine consuming every liter of fuel.
[B-A] ÷C=oil increasing capacity kg/L when engine consuming every liter of fuel.

Clutch

► Clutch releasing not completely

The methods to judge the clutch releasing not completely are as follows:

① Check whether the free stroke of the clutch pedal is too big.

② Check whether the release lever inner end is too low.

③ Check whether the release lever inner end is in the same plane.

④ Check whether the clutch plate is too thick.

⑤ Check whether the clutch plate is installed correctly.

⑥ Check whether the clutch plate steel disc is warped and deformed, whether the friction lining is broken.

⑦ Check whether the clutch plate moves freely on the spline shaft.

► Clutch abnormal noise

The methods to judge the clutch abnormal noise are as follows:

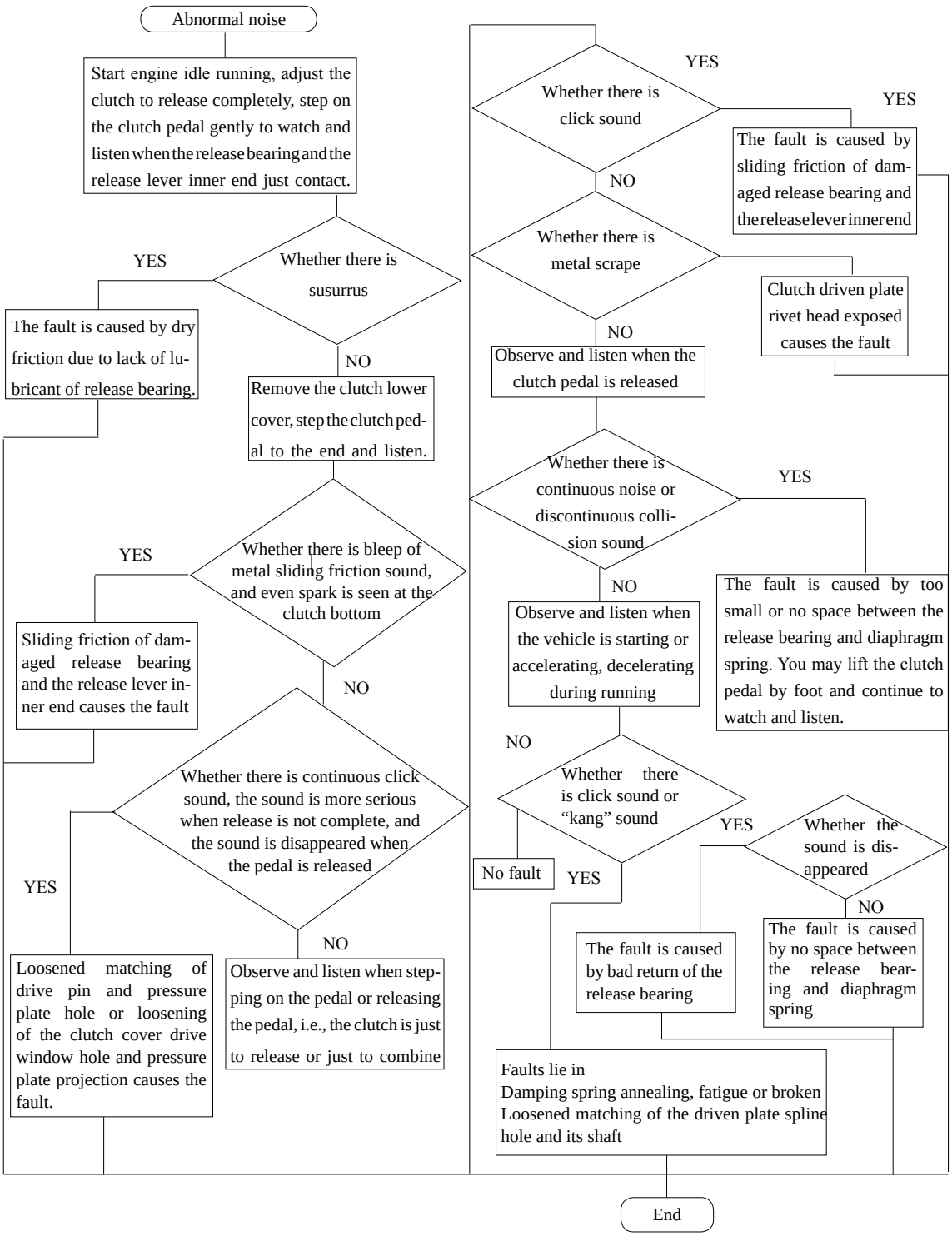

Fig. 2 Diagnosis procedure for clutch abnormal noise

► Clutch slipping?

The steps for handling clutch slipping are as follows:

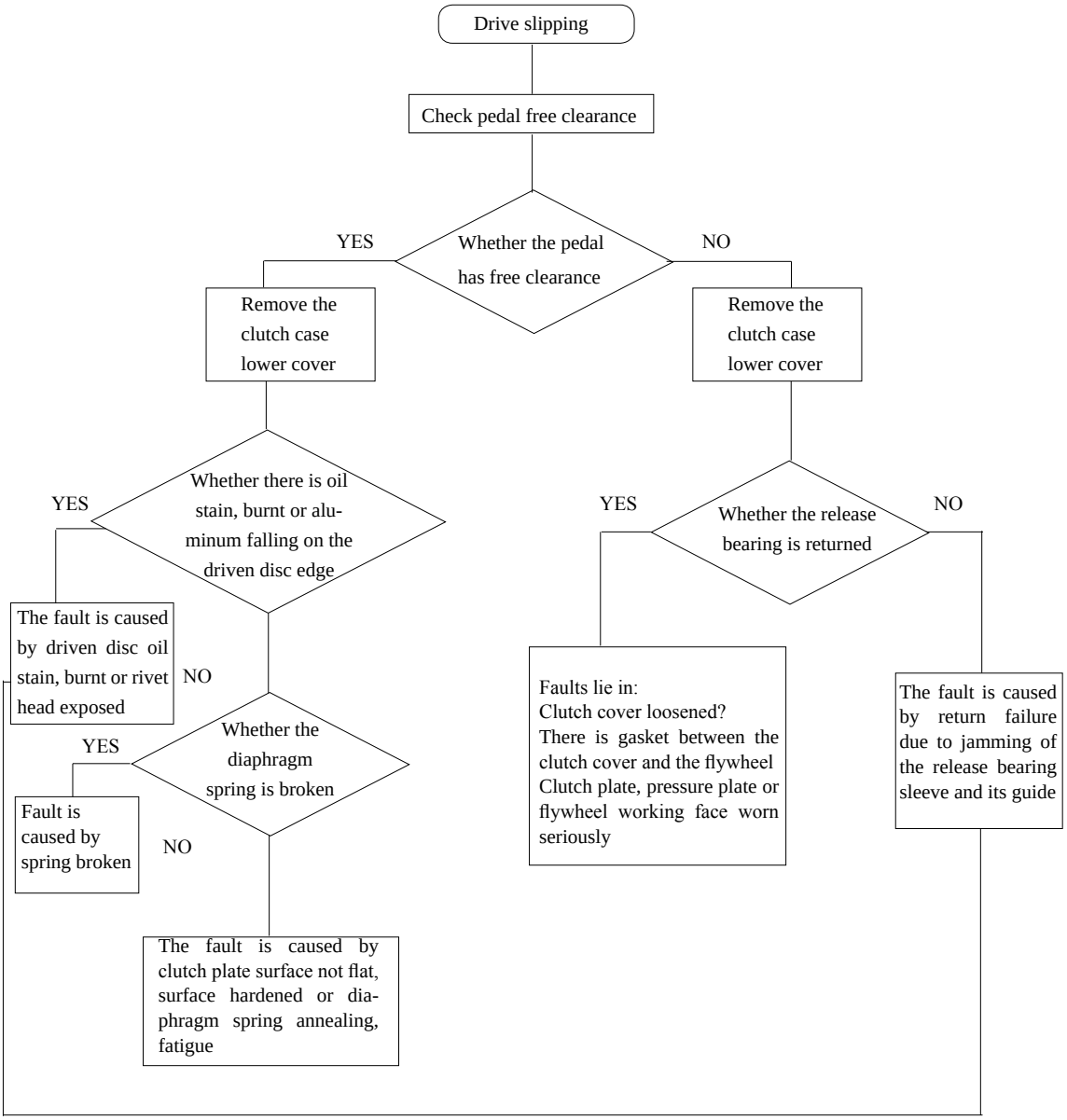

Fig. 3 Clutch drive slipping procedure

► Clutch jitter when starting

The steps to judge the clutch jitter when starting are as follows:

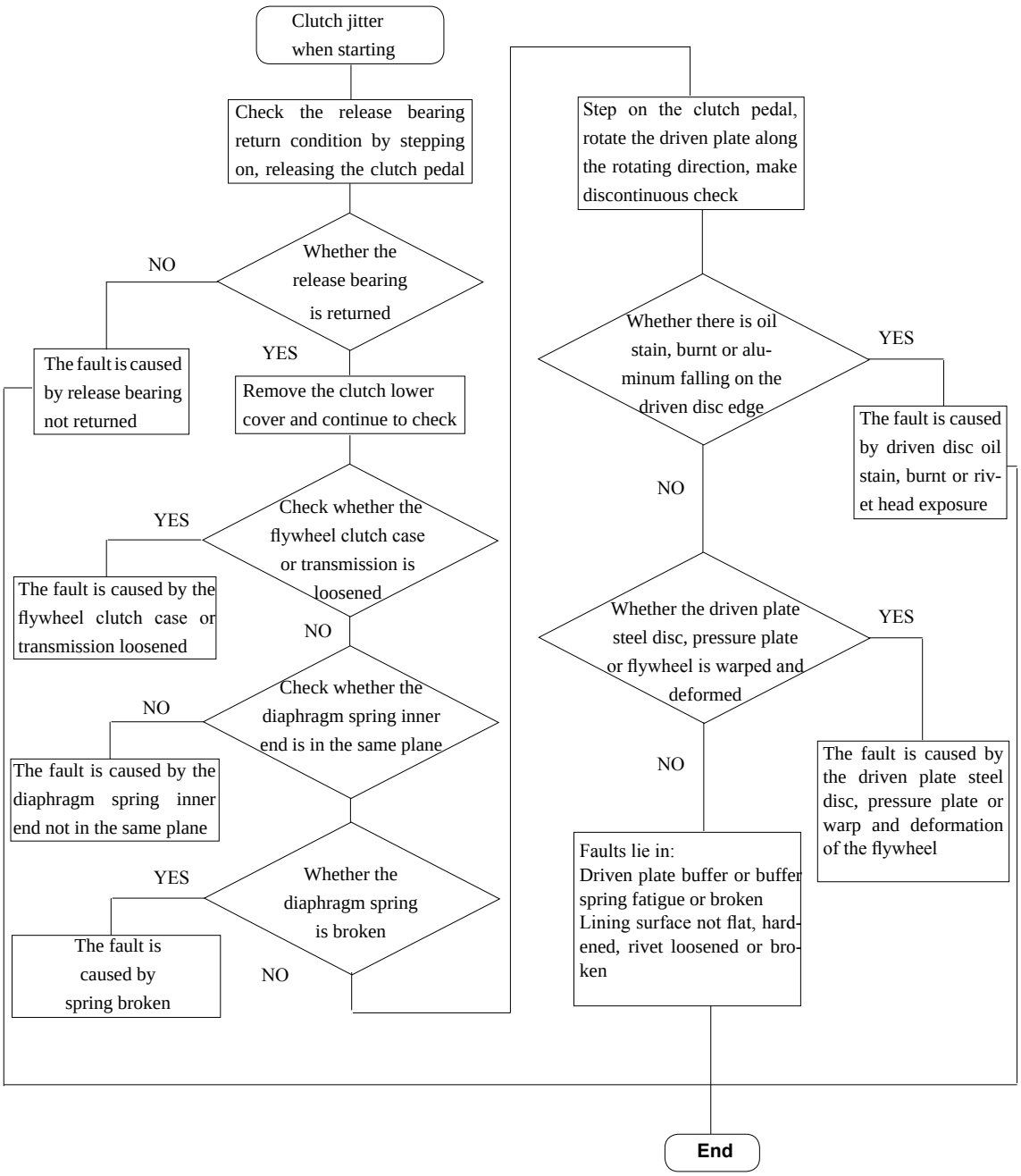

Fig. 4 Diagnosis procedure for clutch jitters when starting

Transmission

► Unable to shift into front row gear or easy to throw out of gear when vehicle is running or starting

When it is unable to shift into the transmission front row gear, it indicates gears R, 1, 3, 5, 7 are fault, this is because the gear lever is not properly adjusted, when the front row gear is shifted too shallow, the rear row gear is shifted too deep, the fault can be cleared just by adjusting the gear lever length or moving the gear lever support, making the gear lever be between the front row gear and the rear row gear; if the front row gear is shifted too shallow, unable to shift into the reverse gear, and when gears 3, 7 are shifted , they are easy to be out-of mesh, at this time, we not only have to adjust the gear lever length, but also have to check the gear lever support for deformation. And also, when the rear row gear is difficult to be shifted into, or it is easy to be out of gear when it is shifted into, its adjustment method is similar to the above, but the adjustment of the gear lever is in the other way round.

► Unable to shift into reverse gear when vehicle reversing, or, unable to shift into 7th gear, 8th gear when running at high speed?

Operating of Shanxi FAST transmission is composed of gear selection and gear shifting, the reverse gear and 7th gear, 8th gear are at both sides of the gear selection area respectively, if unable to shift into the reverse gear, the possible fault is when the gear selection lever is moved to left to the limit position, the select shifting block on the transmission has not entered completely the reverse shift fork yet, when shifting, it will have the phenomenon of shifting into two forks of the reverse gear and the first gear at the same time, unable to shift into the gear, or, out of mesh, shifted into the first gear. Here, the select lever length has to be adjusted, to get the lever longer, or if the lever support is deformed, support bolt loosened, the support has to be adjusted and fixed as well. When the select lever is selected to the reverse groove, and shifted into the reverse gear, when starting and running, it is easy to be out of mesh, this is because the shifted depth is not enough, we have to adjust the gear lever length, or adjust the gear lever support; when there is fault inside the transmission, e.g., accident shifting, shifter collar worn and loosened, the transmission has to be disassembled to clear the fault. And also, the 7th gear, 8th gear are on the right side, it may fail to shift into the 7th gear, 8th gear due to incorrect gear selection; and the 7th gear, 8th gear are high speed gears, such case as synchronizer of the auxiliary transmission abnormally worn, the fault of the double H diverter valve and gear shifting cylinder, it may also affect shifting into the 7th gear, 8th gear. In a word, when the transmission has problem, only by giving all round consideration and making thorough analysis, can the fault be cleared correctly.

Axle

► Interaxle differential burnt out?

We found in our service that few of users' interaxle differential is burnt out, and it is burnt out after new differential is replaced. When the case is serious, even the planetary gear and spider are sintered together. There are two main reasons for burning of the interaxle differential: one is lack of oil, and the other is speed ratio of the intermediate axle and the rear axle incorrect.

Intermediate axle final reduction gear and transition transmission gearbox are lubricated by splash, while the position of the inter-rear-axle differential is the highest, therefore, the lubrication condition of the interaxle differential is relatively poor. In case of short of oil, even a very small amount, it will threaten the interaxle differential. When filling oil for new vehicle, or replacing gear oil, the fresh oil must be filled in from the filler on the interaxle differential housing, and filled up to the intermediate axle transition transmission gearbox inspection port.

We also found during our service that few of users overlooked the original speed ratio when replacing only the driven, driving conic gear of the intermediate axle or the rear axle, as a result, the difference of the speed ratio of the replaced driven, driving conic gear of the intermediate axle or the rear axle will lead to high speed differential running of the interaxle differential during running, plus the lubrication condition of the differential itself is not that good, the differential will be burnt out soon.

Therefore, when replacing the driven, driving conic gear, number of teeth of the replaced driven, driving conic gear must be the same as the original ones.

► Axle abnormal sound

When abnormal sound is found on drive axle, first to judge it is from the intermediate axle or the rear axle, then to judge its basic position. Special attention must be paid when sudden obvious sound occurs. Check immediately. When checking the position with abnormal sound, jack up completely the intermediate axle (or rear axle) with jack, start the engine and keep at low gear, let the jacked axle rotate slowly, and observe the position with abnormal sound. When carrying out this operation, pay attention to safety and take necessary safety measures.

The main reasons for intermediate axle abnormal sound are as follows:

1) The fixing bolt of the driven conic gear is dropped out or loosened
As the coupling bolts were applied with sliding adhesive when assembling the driven conic gear, and the torque is not enough, as a result, the bolt become loosening, even dropped out completely after running for a period of time. Such abnormal sound always occurs suddenly, irregularly and the sound is loud. At this time the vehicle can never be run by force, it must be disassembled for inspection.

When repairing and replacing the driven conic gear, Letai 262 thread anti-loosing glue must be applied at the thread of the coupling bolt and tight it with specified torque.

2) Gear damaged
Some teeth would be damaged during running due to many reasons. Such abnormal sound is also produced suddenly, and quite obvious, it must be disassembled for inspection immediately.

3) Bearings fall apart
Intermediate axle has 7 bearings, abnormal sound caused by bearing falling apart is also quite obvious, the part with abnormal sound must be located, and then disassembled for inspection. Special attention must be paid to the two tapered roller bearings of the interaxle differential, a position easy to have problems, the installation direction of drive wheel cover plate must be correct.

4) Differential lock engagement sleeve jerky motion
Interwheel differential lock engagement sleeve spline cap loosened makes the engagement sleeve jerky motion that would produce collision sound of the two engagement sleeves. Interaxle differential lock pin jerky motion will also produce slap, such abnormal sound is also the mechanical bumping sound without rule.

5) Differential gear burnt out
Interwheel differential and interaxle differential planetary gear and axle shaft gear burnt or teeth damaged all would produce obvious noise. The above noise produced due to mechanical parts damaged always occurred suddenly and is extremely evident. In case such abnormal sound is encountered, disassemble immediately for inspection, continuous running is not allowed; otherwise, even more serious consequence would occur.

6) Continuous noise and such continues noise increases as the load and running speed increase. Such abnormal sound is often caused by bearing pitting corrosion, gear wearing, gear clearance too small or too big, cone gear tooth face contact position deviation, etc. Although such abnormal sound is not dreadful, it must be disassembled for inspection when the case is serious; otherwise the fault would be expanded.

When such abnormal sound is produced after replacing the driving, driven conic gear, it indicates the gear clearance or the thickness of the installation distance adjusting shim is not correct, resulting in contact of the two tooth faces not at proper position. The driving, driven conic gears are ground in pairs, if the replaced gears are not a pair of matching gear, such abnormal sound would be produced definitely and impossible to eliminate.

When repairing and disassembling the driving, driven conic gear, keep the installation distance adjusting shims in good condition, when reassembling, install the original shims, otherwise, driving, driven conic gear engagement noise would be produced due to deviation of the adjusting shims.

7) There is no abnormal sound when vehicle is running normally, but once the speed is reduced and oil is removed, there are hums. This is normally caused by hurt of the rear tooth face or pitting corrosion. Such slight sound will not interfere the overall situation, but when it is getting serious, it must be disassembled for inspection.

8) Gear clearance is too big, each spline shaft, hole loosened, when accelerating rapidly or starting, there is screech, and an obvious feeling of loosening.

► Axle heating

There may be three reasons for axle getting hot: too much lube oil or lack of lube oil, bearing pressed too tight.

Lack of lube oil, the mechanical parts cannot be lubricated, which would make the parts get heated. While excessive lube oil would also produce overheat phenomenon. If the press force of the differential supporting bearing, driving gear shaft supporting bearing is too big, it will also produce the overheat phenomenon. The later can be solved by adjusting the thickness of the shim.

► Oil leaking

Oil leaking fault has many factors in addition to the problem of the oil seal itself. For example, some users complain that when a position is leaking oil, but by replacing the oil seal the problem still cannot be solved. This indicates the reason of oil leaking does not lie in the oil seal itself. First check whether the axle case or transition transmission breather is blocked. If the breather is blocked, the heat produced by the mechanical parts operating would make the air expanded and produce pressure, force the lube oil to be extruded from the oil seal. Oil leaking due to the oil seal outer ring and seat hole loosened is always neglected by the user. The method to solve such problem is to clean the oil seal outer ring and the seat hole before installation, apply Letai 603 cylindrical fixing glue to the oil seal outer ring before placing in the oil seal.

► Tire wearing

There are many factors to lead to tire wearing, for instance, steel rim deformation, axle head bearing loosening, big pressure difference between double row tire. But for dual axle, tire wearing has another reason, axle dislocation.

Such cases as wearing and loosening of balance shaft bushing of the dual axle, damage of balance suspension thrust rod rubber bearing, seal off of balance thrust bar support and axle case would result in axle dislocation.

► Intermediate, rear driving axle half-axle oil seal leaking

Intermediate, rear driving axles are two-stage driving axles of median deceleration and wheel planet gear deceleration, therefore, they have greater ground clearance and total reduction ratio; the driving axle and the wheel reductor lube oil is at two positions, not connected with each other, sealing and partition is made mainly by the half-axle oil seal.

Leaking of half-axle oil seal will make the lube oil in driving axle reduced, affecting normal lubrication, intensifying wearing of mechanical parts, thus, resulting in early damage. Leaking of half-axle oil seal makes the lube oil flow to wheel reductor, resulting in increasing of the oil level in wheel reductor and destroying the oil seal. And it flows to the brake drum, causing bad braking, and threatening safe running.

The following points are the main reasons of half-axle oil seal leaking:
① Excessive oil in the driving axle reductor, the oil level exceeds the normal height.
② The breather of the driving axle reductor is blocked, when running, the oil temperature raised, pressure increased, the oil is extruded out and leaking from the oil seal.
③ The oil seal is deteriorated and aged, loss of sealing function.
④ Installation of oil seal not correct.
⑤ Installation of the oil seal and the half-axle sleeve is too loose, the quality of the half-axle oil seal is not good, the size is not correct.
⑥ Half-axle journal is worn, dimension changed.
⑦ Hub bearing loosened, reductor bearing loosened, the half-axle jitters up and down, sealing of the oil seal is not good.

► Parts of intermediate, rear axle wheel reductor repaired and replaced

When the wheel planet gear reductor has the following defects, it must be repaired or replaced.
(1) Working surface of planet gear, internal gear, and sun gear ground gear seriously worn or gear teeth broken.
(2) Matching surface of the planet gear shaft journal and planet gear inner hole and needle roller bearing has severe wearing trace.
(3) Side clearance of sun wheel gear splined hole and half-axle spline wearing exceeds 0.6mm.
(4) Side clearance of gear ring, splined hole and axle head spline wearing exceeds 0.8mm.
(5) Inner, outer thrust washer of planet gear scuffed or has severe wearing trace.
Inner, outer thrust washer of sun gear scarred or has severe wearing trace.

► Cause of braking weak, brake drum hot and the remedies

(1) The following points are the reasons:

A. Effect of road: continues downgrade, avoiding obstacles when turning. If brake is often used to control the speed, sliding friction time of the shoe and brake drum will be increased, making the brake drum temperature rise rapidly, heat fading phenomenon increased, friction coefficient decreased greatly, and the braking effect decreased (i.e. braking weak).

B. Drive operation improper: not make full use of exhaust to brake, improperly overused braking, resulting in too frequent contact (times) and long time contact of the brake shoe and brake drum, causing the brake drum to get hot, and brake weak.

C. Braking clearance too small, brake drum deformed, make the shoe contact the brake drum frequently, and become hot.

D. Brake shoe return spring loose and soft, broken, difficult to release from braking, result in the brake drum hot, braking weak.

E. Brake shoe rusted is also the reason of braking weak and brake drum hot.

F. Exhaust of air braking control valve not complete, result in slow releasing from braking.

(2) Remedies

A. Control strictly the speed of the vehicle. If it is at continues downgrade, turning and obstacles are too much, use as much as possible the engine exhaust brake to meet the purpose of deceleration. Use the brake equally, so long as the sliding friction time of the brake shoe and the brake drum is reduced, heating of the brake drum can be controlled to certain range, and the heat fading phenomenon will be decreased to minimum, thus, effective braking is ensured under emergency case.

B. Check and adjust the clearance between brake shoe and brake drum timely, keep it in the specified standard, if the brake drum is deformed seriously, repair and replace it.

C. Replace the brake shoe return spring, and check returning condition of the brake shoe.

D. Disassemble the brake shoe, grind the shoe pin shaft, copper sleeve, and add small amount of lithium base grease.

E. Air braking valve (master cylinder) must exhaust completely after braking, if not completely, it will lead to slow releasing from braking, prolonging of sliding friction time of the brake shoe and the brake drum, making the brake drum temperature rise rapidly. Disassemble the air braking valve for cleaning. According to the service condition, incomplete exhaust of the brake control valve is mainly due to foreign matters inside the valve, which makes the piston jammed.

Frame

► Frame cracking from the fixing bolt hole of the intermediate and rear axles' rubber cushion block

The methods to handle the frame cracking from the fixing bolt hole of the intermediate and rear axles' rubber cushion block are as follows:

① Remove the superstructure of the whole vehicle.
② Remove the intermediate and rear axles, balance axle and propeller shaft.
③ Separate the 4th, 5th and 6th cross-members and tail beam from the side member.
④ Remove the bolts and rivets of the coupling auxiliary plate, gusset plate, and side rail. Remove the auxiliary plate and gusset plate.
⑤ Mend the cracking part of the side rail.
⑥ Mend the gusset plate.
⑦ Correct the deformed part of the side member.
⑧ Remove rust and dirt from the side member, gusset plate and the lengthened auxiliary plate to be replaced before installation.
⑨ Re-rivet the 4th cross member, 5th cross member, 6th cross member and tail beam.
⑩ Install the intermediate and rear axles, balance axle, and propeller shaft.

⑪ Install the upper structures.
⑫ Remove the original cushion block; and replace it with new-type cushion block.

► Precautions while handling:

① When carrying out cold riveting, make sure the side member, auxiliary plate and gusset plate are clean, and no impurity at the various cold riveting connection planes. Use the original holes on the side rail as far as possible; when holes have to be added, make sure there are no bolt holes or the process holes in the same positions of the side member.
② All welds shall use J506 welding rod.
③After welding, strike the weld end immediately and its surrounding with a hammer so as to increase strength of the weld and eliminate the stress, preventing it from cracking later.
④ After the auxiliary plate lengthened, one rivet has to be cold riveted at both the front and rear position of the cracking.
⑤ The front of the new auxiliary plate is lengthened to the spare tire carrier, 2010mm from the center of the auxiliary plate.
⑥ The rear of the new auxiliary plate is lengthened to the tail beam, 1760mm from the center of the auxiliary plate.

Air Conditioning

► Air conditioner not refrigerating

The steps to judge the air conditioner not refrigerating are as follows:

① The system does not produce cold air, having lost the refrigeration function. The possible reasons may be:

a. The driving belt is too loose or has been broken, unable to drive the compressor to work; if the belt is too loose, adjust it by the adjustment screw; if it is broken, replace it. If the belt tightener wheel bearing is jammed or damaged, repair it or replace it.

b. The refrigerant is leaking seriously; owing to the function of low atmospheric pressure protective switch, the compressor cannot be started; if the leaking position can be seen from the exterior, screw tight the leaking connection joint; if the pipeline has obvious crack, replace the pipeline of the air conditioner; if the leakage cannot be seen outwardly, check the system pressure by using an air conditioner manifold pressure gauge; if the pressure is high, the low atmospheric pressure reading is zero. Or after vacuuming, the pressure gauge would appear rising, and then, the system must be charged with air. By using the soapsuds to find out the leaking position, after handling, vacuum it again; re-check it to confirm there is no leakage any more, then fill it with Freon.

c. The compressor bearing is damaged, which can be determined by using the sound measurement method; if there is abnormal sound, the bearing has to be replaced.

② The refrigerant is insufficient: watch through pressure gauge and sight glass, if there are good air bub-

bles in the window, it indicates the refrigerant is insufficient; if there are few air bubbles in the window, it indicates the refrigerant is moderate; if there is no air bubble and there is fluid flowing, it indicates there is excessive refrigerant.

③ The system is blocked by dirt. Owing to long-time operation of the compressor, the impurity from the mechanical wear or dirt falling off the inner walls of the system parts due to the refrigerant action has blocked the dry solution stock bottle or the expansion valve. Then, check it with pressure gauge; if the low pressure side appears in vacuum, the high pressure gauge indicates very low pressure, and the front and rear pipes of the dry bottle and the expansion valve are frosted or iced, the outlet air is not cold, and there is no big change after it is turned off and restarted, which indicates the system is blocked; replace the dry bottle and expansion valve.

④ The condenser fan does not work. The reason is that the long operation of the fan with strong electric current. The air conditioner relay contact can be easily heated, causing poor contact. Check mainly the air conditioner fuse, relay, panel control device and air conditioning switch.

⑤ Compressor electromagnetic clutch is slipping, repair or replace the magnetic clutch.

⑥ The evaporator air passage is blocked by dust and foreign matters: when the air conditioner is working, Freon in the evaporator must absorb massive quantity of heat from the pipe wall, forming some water drops; then the dust and foreign matters inside the vehicle are sucked by the fan into the evaporator and stuck on the pipe wall, which is likely to block the air passage; turn on the air conditioner when checking, if the air at the outlet is very small and not cold, it indicates there are dust and foreign matters on the evaporator surface, which must be cleaned off promptly.

⑦ The external circulation air valve is not closed, and the air from outside of the vehicle enters the cab, causing poor refrigeration: open the external circulation.

⑧ The compressor is damaged, and there is internal leakage: use a pressure gauge to check; if it is at the low pressure side, it indicates the pressure is too high, but if it is at the high pressure side, it indicates the pressure is too low. The compressor has abnormal knocking, and the temperature difference between the high and low pressure sides of the compressor housing is not big, it indicates the compressor valve plate bearing and sealing plate are damaged; repair or replace.

⑨ The condenser has a poor cooling function: check it with a pressure gauge. If the high pressure gauge reading is too high, check whether the condenser fan is working normally and whether the condenser chip is blocked up by dust and dirt.

⑩ The temperature inside the cab is not ideal, the engine speed is very high, and the air amount of the fan is also very high. If the temperature inside the driver's cab is not ideal, check the thermostatic switch.

► No warm air from the heating system

The steps to judge no warm air from the heating system are as follows:

① Check whether the fan is working, whether the air passage switch is ON, and whether the cooling-heating change-over lever is on the hot position.
② Check whether the water temperature of the engine is normal.
③ Check whether the heater pipeline and heater water pipe is blocked up.
④ Check if the air deflection vane is damaged.

Electric Appliance

► CD not working

The steps to judge CD not working are as follows:
① Check whether the electric circuit and fuse are normal and in good condition.
② Check whether CD is jammed and becomes inoperative.
③ Check whether the loudspeakers work normally.
④ Check whether the operation of CD is normal.

► Windscreen wiper not working

The steps to judge the windscreen wiper not working are as follows:
① Check whether the fuse, relay, multipurpose timer, wiper switch, and wiper motor are in good condition.
② Check whether the wiper connecting rod ball head is too tight.
③ Check whether the wiring and cards are in good contact.

► Electric horn not working

The steps to judge electric horn not working are as follows:
① Check whether the fuse, relay, and horn change-over switch are in good condition.
② Check whether the minus earth is in good condition.
③ Check whether the horn is in good condition.
④ Check whether the air horn solenoid valve is in good condition.

► Steering light not working

The steps to judge steering light not working are as follows:
① Check whether the bulb and fuse of the steering light are damaged.
② Check whether the switch and flasher are working normally.
③ As to the steering light of new style vehicle, the steering light can be turned on only when the vehicle is moving.
④ Check the related wiring.

Braking

► Braking weak

The steps to judge weak braking are as follows:
① Check whether the brake hub and brake disc are seriously worn out.

② Check whether the braking distance is too big and (whether) the air pressure is too low.
③ Check whether the brake disc has stain.
④ Check whether the brake cylinder, brake master cylinder is leaking, jammed.
⑤ Check whether the relay valve is leaking.
⑥ Check whether the friction lining is too hard or improperly bound.
⑦ Check whether the adjusting arm is damaged and braking distance is improperly adjusted.
⑧ Check whether the cam is worn out and the wheel hub is out of round.
⑨ Check whether the brake shoe pin and cam shaft are rusted and jammed (slow braking).

► Brake locked

The steps to judge brake locked are as follows:
① Check whether there is too much resistance when the vehicle is starting to run and whether the sliding performance is normal.
② Check whether the hub temperature is too high and whether the gap of the brake shoe and brake hub is too small.
③ Check whether the brake cam shaft returning to the position is normal, if the shoe and shoe pin is well lubricated, and if there is any jamming.
④ Check whether the brake master cylinder and relay valve are damaged, leaking and jammed.
⑤ Check whether the brake cylinder and manual control valve are damaged, and leaking.
⑥ Check whether the quick release valve is normal and whether the braking line is blocked or damaged.

Steering

► 8×4 model double front axle scrubbing

Steps for handling 8×4 model scrubbing are as follows:
(1) Adjust the pressing strength of the front wheel hub bearing (standard value is 20~55N).
(2) The air pressure of the tires must be equal; the standard value is: 725Kpa.
(3) Adjust the 1st and 2nd axle toe in (standard value: bias rubber tire: 0-2mm; radial-ply tire:-2-0mm). Note: the tread of the wheels on the same axle must be the same; the toe in value of the 1st and 2nd axles must be the same.
(4) The left front wheel moves 15m forward along the set straight line.
(5) Measure the central distance between the end covers of the front and rear ball seats of the 1st axle draglink, the standard value is: 920mm (if there is a deviation in the standard value of the central distance, it indicates that the draglink is deformed).
(6) Use plumb to check verticality of knuckle arm, note: as the steering gear body is inclined in positioning when installing, the knuckle arm has to be inclined backward by 1 degree.
(7) Use plumb to check the verticality of floating arm (the verticality can be measured at the points of the oil nozzle of the float arm support pin and of the ball head pin central hole, which can be moved backward by 1degree).
(8) The verticality of the floating arm can be changed by using telescopic drag link; note: when making adjustment, lock the steering wheel; after the drag link is adjusted, the floating arm must be at the gravity vertical angle.

(9) Measure the central distance between the end covers of the front and rear ball seats of the 2nd axle drag link, the standard value is: 845mm; note: if the central distance exceeds the standard value, the drag link might be deformed (error can be adjusted and corrected if the standard value is within 5mm).
(10) The left wheel of the vehicle 1st axle moves forward for 15m along the set straight line, and the left wheel of the 2nd axle must also move forward along the set straight line. If the left wheel of the 2nd axle has not moved forward along the straight line, it shows that the verticality of the floating arm has not been correctly adjusted, or the drag link of the 2nd axle is deformed.
(11) Measure the left and right axle base of the 1st and 2nd axles by using a plumb hanging from the end cover center of the 1st and 2nd axle ends.
(12) If the axle base is different, loosen the U-bolt at the right side of the 2nd axle to adjust the axle base by moving the right wheel of the rear axle; after adjustment, the left and right axle bases must be equal.
(13) Adjust the 4 steering angle limit bolts of the 1st and 2nd axles to guard against over-steering. Note: for the steering angles, when turning left, it should not be more than 43 degrees; when turning right, no more than 37 degrees. When turning to limiting angle, the limit bolts should press against H beam.

► Steering vibration

The steps to judge steering vibration are as follows:
(1) The front wheel bearing worn out.
(2) The kingpin and bush are excessively worn out (steering linkage and kingpin are poorly lubricated).
(3) Steering knuckle deformed.
(4) Wheel alignment not properly adjusted (check the camber angle, caster angle and toe in).
(5) Joints of couplers and steering shaft are worn out (spline coupling band).
(6) The steering wheel shaft is loosened; the steering knuckle tie rod, steering arm, steering knuckle arm or ball head of the steering linkage are loosened.
(7) Steering shaft bearing loosened.
(8) The gap between the steering arm and locking nut is too large.
(9) The wheels are seriously worn out; tire bead is rounded due to wearing.
(10) There is air inside the steering gear oil passage.
(11) The fixing screw of the steering gear is loosened.
(12) The tires, wheel hubs, brake drum are not balanced.
(13) The wheel on the hub is loosened (bolts are not tightened up).
(14) The wheel hubs play; the axle journal bolts are loosened.
(15) The fatigue degrees of the spring steel sheets and shock absorbers on both sides are not equal.

► Be pulled to one side direction

The steps to judge pulling to one side direction are as follows:
① Tire pressures are not the same, it is pulled to one side direction with lower pressures.
② The brake is pulling to one side (the braking forces of the two front wheels are not equal).
③ The left and right axle bases are not equal (the difference is above 10mm).
④ The hardness of the front steel plates are not equal.
⑤ The axle journal nuts of single side hub become loosened, and the bearing damaged.
⑥ The adjustment of the camber angle is not correct, generally, the steering declines toward to the side with larger camber angle.

⑦ The U-bolts of the leaf spring become loosened, the front axle plays.
⑧ The U-bolts of the leaf spring of the rear axle become loosened. When they move to one side, it will be pulled to one side direction.
⑨ The oil distribution valve of steering gear is not distributed in a balanced way, causing uneven distribution of the steering force.