Operating Instructions

KMK 5090

Crane Identification Number:

11. 09. 90

https://www.besttruckmanuals.com/

https://www.besttruckmanuals.com/

Contents

	Foreword	ii - 1
1.	**Introduction**	**1 - 1**
1.1	**Instructions for use**	1 - 1
1.2	**Contents**	1 - 1
1.3	**Conversion table for metric units**	1 - 3
1.4	**Vehicle identification**	1 - 4
1.5	**General drawing of the truck crane**	1 - 5
1.6	**Technical description of the truck crane**	1 - 6
1.6.1	Carrier	1 - 6
1.6.2	Superstructure	1 - 9
2.	**Safety regulations**	2 - 1
2.1	**Road safety**	2 - 1
2.2	**Accident prevention**	2 - 2
2.3	**Reliability**	2 3
2.4	**General safety regulations**	2 - 4
2.4.1	Servicing and maintenance	2 - 4
2.4.2	Prior to working with the crane	2 - 4
2.4.3	Hand signals for the banksman	2 - 5
2.4.4	Load bearing capacity of the ground; outriggers	2 6
2.4.5	Safe distance from slopes and pits	2 - 7
2.4.6	Safe distance from electric cables	2 8
2.4.7	Counterweight	2 - 8
2.4.8	Hoisting capacity and lifting capacity	2 - 9
2.4.9	Effect of wind on crane operations	2 - 9
2.5	**Operating errors**	2 12
2.6	**Load moment limiting system ("SLI")**	2 - 13
3.	**Driving**	3 - 1
3.1	**Prescribed condition for driving the truck crane on roads**	3 - 1
3.1.1	Prescribed transport condition with the boom placed on the crane	3 - 3
3.1.2	Prescribed transport condition with the boom placed on a trailer	3 - 5
3.2	**Driver's cab on carrier**	3 - 7
3.2.1	Front instrument panel	3 - 9
3.2.2	Side instrument panel	3 - 13

https://www.besttruckmanuals.com/

3.3	**Heating the driver's cab**	3 - 16
3.3.1	Heating the driver's cab	3 - 16
3.3.2	Ventilating the driver's cab	3 - 17
3.3.3	Fresh air blower (optional equipment)	3 - 17
3.3.4	Additional water heating system (optional equipment)	3 - 18
3.4	**Before setting off**	3 - 20
3.4.1	Setting up the prescribed transport condition	3 - 20
3.4.2	In winter	3 - 20
3.4.3	Visual inspection of the entire crane	3 - 20
3.4.4	Checking the oil level in the driving engine	3 - 21
3.4.5	Checking the oil level in the automatic gearbox	3 - 22
3.4.6	Checking the tyres	3 - 22
3.4.7	Checking the windscreen washing system reservoir	3 - 23
3.4.8	Switching on the battery master switch	3 - 23
3.4.9	Engaging the free movement position for the slewing gear (only when driving on roads with the boom placed on a trailer)	3 - 24
3.4.10	Engaging the free movement position for the boom (only for driving on roads with the boom placed on a trailer)	3 - 25
3.4.11	Adjusting the driver's seat, steering column and mirrors	3 - 26
3.4.12	Placing a 24-hour recording disk in the tachograph	3 - 26
3.4.13	Switching on the ignition	3 - 27
3.4.14	Changing the transfer case to the on-the-road gear	3 - 27
3.4.15	Checking the suspension system	3 - 28
3.4.16	Checking that the level of the carrier is correct for on-the-road travel	3 - 29
3.4.17	Checking that the carrier's electrical system is functioning	3 - 29
3.4.18	Starting the driving engine	3 - 30
3.4.19	Starting the engine with starter spray (optional equipment)	3 - 31
3.4.20	Driving engine is running - checking the instruments	3 - 32
3.4.21	Checking the compressed air system and brake system	3 - 33
3.4.22	Refuelling	3 - 34
3.5	**During the journey**	3 - 35
3.5.1	Testing the brakes	3 - 35
3.5.2	Gears of the automatic gearbox	3 - 35
3.5.3	Automatic gearbox - alternative modes	3 - 37
3.5.4	Starting and stopping	3 - 38
3.5.5	Changing gear manually	3 - 39
3.5.6	Checking the controls and instruments while driving	3 - 40
3.5.7	Driving downhill	3 - 44
3.5.8	Driving uphill	3 - 45
3.6	**After each journey**	3 - 46
3.6.1	Stopping the vehicle	3 - 46
3.6.2	Switching off the battery master switch for long stops	3 - 48
3.7	**Driving off-the-road**	3 - 49
3.7.1	Off the road gear	3 - 49
3.7.2	Longitudinal differential lock in transfer case	3 - 50

https://www.besttruckmanuals.com/

3.7.3 Longitudinal differential lock on the transfer drive axle (optional equipment only with drive 10 x 8) . . . 3 - 51
3.7.4 Driving the third axle line . . . 3 - 52
3.7.5 Transverse differential locks in the axle lines . . . 3 - 53
3.7.6 Carrier level adjustment system . . . 3 - 54
3.7.7 Freeing the carrier when it's stuck in terrain . . . 3 - 57

3.8 Towing the crane and tow starts . . . 3 - 58
3.8.1 Tow starts . . . 3 - 58
3.8.2 Towing the crane . . . 3 - 58

3.9 Towing a trailer (optional equipment) . . . 3 - 62

4. Crane Operation . . . 4 - 1

4.1 Crane operator's cab on superstructure . . . 4 - 1
4.1.1 Front instrument panel . . . 4 - 2
4.1.2 Instrument panels on crane operator's seat . . . 4 - 6
4.1.3 Control lever . . . 4 - 8
4.1.4 Controls of the safe load indicator (SLI) . . . 4 - 9

4.2 Heating system for the crane operator's cab . . . 4 - 10
4.2.1 Heating the crane operator's cab . . . 4 - 10
4.2.2 Ventilating the driver's cab . . . 4 - 11
4.2.3 Additional water heating system (optional equipment) . . . 4 - 11

4.3 Before starting work on the site . . . 4 - 13
4.3.1 Disengaging the free movement position for the boom (only for driving on roads with the boom placed on a trailer) . . . 4 - 13
4.3.2 Disengaging the free movement position for the slewing gear (only for driving on roads with the boom placed on a trailer) . . . 4 - 14
4.3.3 Ground conditions on the site . . . 4 - 15
4.3.4 Outriggers . . . 4 - 15
4.3.5 Disconnecting the electric power supply to the superstructure . . . 4 - 21
4.3.6 In winter . . . 4 - 21
4.3.7 Visual inspection of the whole crane . . . 4 - 21
4.3.8 Checking the oil level in the crane engine . . . 4 - 22
4.3.9 Checking the windscreen washing system reservoir . . . 4 - 22
4.3.10 Releasing the mechanical superstructure lock . . . 4 - 23
4.3.11 Switching on the battery master switch . . . 4 - 23
4.3.12 Adjusting the crane operator's seat . . . 4 - 24
4.3.13 Switching on the ignition . . . 4 - 24
4.3.14 Starting the crane engine . . . 4 - 25
4.3.15 Starting the crane engine with starter spray (optional equipment) . . . 4 - 26
4.3.16 Engine is running - checking the instruments . . . 4 - 27
4.3.17 Refuelling . . . 4 - 27

4.4 Operating the crane with/without outriggers . . . 4 - 29
4.4.1 Operating mode with outriggers . . . 4 - 29

https://www.besttruckmanuals.com/

4.5	**External influences while working with the crane**	4 - 30
4.5.1	Preheating the hydraulic oil	4 - 30
4.5.2	Cooling the hydraulic oil	4 - 31
4.5.3	Wind	4 - 32
4.5.4	Hand signals	4 - 32
4.6	**Operating the crane**	4 - 33
4.6.1	Picking up the hook block	4 - 33
4.6.2	Reeving the hoist rope	4 - 36
4.6.3	Reeving modes	4 - 38
4.6.4	Counterweights	4 - 39
4.6.5	Safe Load Indicator (SLI)	4 - 50
4.6.6	Limit switches	4 - 57
4.6.7	Spotlights	4 - 58
4.6.8	Dead man's switch	4 - 58
4.6.9	Main hoist	4 - 59
4.6.10	Auxiliary hoist (optional equipment)	4 - 63
4.6.11	Slewing gear	4 - 67
4.6.12	Raising/lowering the boom (derricking) (main boom only)	4 - 69
4.6.13	Telescoping the boom	4 - 71
4.6.14	Movements which can be carried out simultaneously	4 - 74
4.7	**Moving the truck crane when it is rigged**	4 - 75
4.7.1	Ground travelled over	4 - 75
4.7.2	Position of the boom	4 - 75
4.7.3	Moving the rigged truck crane	4 - 76
4.8	**Stopping work and unrigging the crane**	4 - 79
4.8.1	Stopping work	4 - 79
4.8.2	Unrigging the truck crane	4 - 81
5.	**Working with a boom extension**	5 - 1
5.1	**Two-stage swing-away lattice extension (optional equipment)**	5 - 1
5.2	**Installing the lattice extension (optional equipment)**	5 - 1
5.2.1	Installing the 10-m (32.8 ft) swing-away lattice extension on the main boom	5 - 1
5.2.2	Installing the 16-m (52.5 ft) two-stage swing-away lattice extension on the main boom	5 - 4
5.2.3	Inclination of the 10-m (32.8 ft) or 16-m (52.5 ft) two-stage swing-away lattice extension	5 - 8
5.2.4	Raising the boom	5 - 9
5.2.5	Working with the lattice extension	5 - 10
5.2.6	Unrigging the swing-away lattice extension	5 - 10

https://www.besttruckmanuals.com/

6.	**Procedure in case of malfunctions**	6 - 1
6.1	**Malfunctions on the carrier**	6 - 1
6.1.1	Electrical equipment	6 - 1
6.1.2	Starting the vehicle from another vehicle - charging the carrier battery (optional equipment)	6 - 5
6.2	**Malfunctions on the superstructure**	6 - 6
6.2.1	Electrical equipment	6 - 6
6.3	**System for tipping the driver's cab**	6 - 9
7.	**Servicing and maintenance**	7 - 1
7.1	**Cleaning your truck crane**	7 - 1
7.2	**General notes on maintenance**	7 - 2
7.3	**Routine work**	7 - 3
7.3.1	Daily inspection and maintenance work	7 - 3
7.3.2	Weekly inspection and maintenance work	7 - 3
7.3.3	Monthly inspection and maintenance work	7 - 4
7.3.4	Quarterly inspection and maintenance work	7 - 4
7.3.5	Half-yearly inspection and maintenance work	7 - 5
7.3.6	Annual inspection and maintenance work	7 - 5
7.3.7	Inspection and maintenance work every two years	7 - 5
7.4	**Changing the oil**	7 - 5
7.4.1	Oil change for carrier	7 - 6
7.4.2	Oil change for superstructure	7 - 7
7.5	**Lubricating schedule**	7 - 8
7.6	**Lubricant table**	7 - 10
7.7	**Laying-up and conservation**	7 - 11
7.7.1	Work before laying-up	7 - 11
7.7.2	Work during stoppages	7 - 11
8.	**Technical data**	8 - 1
8.1	**Dimensions**	8 - 1
8.2	**Carrier**	8 - 2
8.2.1	Chassis	8 - 2
8.2.2	Carrier engine	8 - 2
8.2.3	Power shift gear	8 - 2
8.2.4	Transfer case	8 - 3
8.2.5	Axle lines	8 - 3
8.2.6	Steering	8 - 4
8.2.7	Wheel suspension	8 - 5
8.2.8	Tyres	8 - 5
8.2.9	Vehicle's hydraulic system	8 - 6

https://www.besttruckmanuals.com/

8.2.10	Outriggers	8 - 7
8.2.11	Brake system	8 - 7
8.2.12	Vehicle's electrical system	8 - 10
8.2.13	Driver's cab	8 - 10
8.2.14	Tools	8 - 10
8.2.15	Driving speeds	8 - 10
8.2.16	Climbing ability	8 - 11
8.2.17	Turning circle radii	8 - 11
8.2.18	Weights	8 - 11
8.3	**Superstructure**	8 - 14
8.3.1	Turntable	8 - 14
8.3.2	Crane engine	8 - 14
8.3.3	Crane's hydraulic system	8 - 15
8.3.4	Main hoist	8 - 16
8.3.5	Auxiliary hoist (optional equipment)	8 - 16
8.3.6	Slewing gear	8 - 17
8.3.7	Derricking gear	8 - 17
8.3.8	Main boom	8 - 17
8.3.9	Boom extension (optional equipment)	8 - 18
8.3.10	Counterweight lifting gear	8 - 18
8.3.11	Counterweight versions	8 - 18
8.3.12	Hook blocks	8 - 19
8.3.13	Safety devices	8 - 19
8.3.14	Operating speeds without a load	8 - 20
8.3.15	Crane operator's cab	8 - 20
8.4	**Tightening torques for fixing bolts**	8 - 21

Order data

Circuit diagrams (Bound separately)

Operating and maintenance instructions for diesel engines (Bound separately)

Operating instructions for automatic gearbox (Bound separately)

https://www.besttruckmanuals.com/

Foreword

These operating instructions with lifting capacity tables and outrigger pressure tables belong to the scope of supplies of truck crane KMK 5090. They are intended first and foremost for the crane operator and contain all the information required for operating truck crane KMK 5090 safely for the permitted applications, which are listed.

These operating instructions are not intended to be used as a training manual for trainee crane operators. The descriptions given have been written on the assumption that they will be read by crane operators who are fully trained for working with truck cranes.

Plan each job carefully. Make sure that you obtain all the information you need concerning the route to the site (distance, route to be followed, headroom, maximum loads permitted to cross bridges, etc.). Find out details of the work to be performed by the crane (load bearing capacity of the ground, weight and dimensions of the loads to be lifted, required lifting heights and working radius, build ups, etc., which will restrict movement). Assemble the equipment which will be needed (lifting tackle, counterweight, lining material for the outriggers, etc.). Organize the journey and procure any permits needed for it.

If you do not plan things properly you will be forced to improvise - and improvisation often leads to accidents!

A word of advice to all crane operators:

As you know, as the crane operator you are responsible for the crane and for all work connected with it.

For the safety of those around you - and of course your own safety - follow the advice given below:

Before you use the crane for the first time, familiarize yourself with its operation in all permitted operating modes. Read these operating instructions through and compare all of the illustrations with your crane. Go through the described procedures step by step with your crane.

Always carry these operating instructions and the lifting capacity and outrigger pressure tables with you in the crane.

Pay particular attention to the crane's safety devices. Check continually that these devices are working. If you notice that a safety device is not working or is not working properly, stop work immediately.

When travelling on roads or operating the crane you must also observe any applicable rules and regulations, such as rules for the prevention of accidents for example, which may not be listed in these operating instructions.

In these operating instructions you will find notes drawing your attention to dangers. Please pay particular attention to these.

Ensure the continued safety and reliability of your crane by looking after it and maintaining it carefully. Never postpone necessary repairs, and only allow repairs to be carried out by trained personnel.

https://www.besttruckmanuals.com/

Only use original Krupp spare parts. When you order spare parts, use the spare parts list for truck crane KMK 5090

Krupp s after sales service network is always ready to help if repairs have to be carried out.

We are also always happy to give advice should any questions arise when working with your crane.

We are also, of course, always grateful for any tips and suggestions you can give us.

https://www.besttruckmanuals.com/

1. Introduction

These operating instructions are intended for the KRUPP truck crane KMK 5090.

1.1 Instructions for use

Please read through sections 1 to 5 before starting work with your truck crane.

Your attention is drawn in particular to the following notes in the operating instructions:

Danger: Dangers are pointed out which are connected with the described procedure and may **endanger persons.**

Caution: Dangers are pointed out which are connected with the described procedure and may first and foremost lead to **damage to objects**, e.g. to the truck crane or the load which is lifted.

Note: **Further notes and tips** are given regarding the handling of the truck crane.

1.2 Contents

This section (**Section** 1) contains a **general drawing** of the truck crane with the terms used for the main assembly groups. A short technical description explains how the most important units work

We have placed particular emphasis on the description of the **safety equipment**. This description is given in **Section 2**, together with general notes on safety

Section 3 contains the operating instructions for driving the truck crane. This section gives a description of the condition in which the truck crane may be driven on roads (the transport condition), preparing to drive the truck crane and **driving**.

Section 4 describes **operation of the crane** starting with preparation of the job on the site and including rigging and unrigging the crane.

Section 5 gives instructions for working with the two-stage swing-away lattice extension. Installation, operation, removal and transportation are described in this section.

Section 6 lists the action which should be taken if the **crane is not working** properly and contains notes on how to rectify some malfunctions.

Care and maintenance of your truck crane are described in **Section** 7. This does not include care and maintenance of parts manufactured by our suppliers (e.g. engine, gearbox) which are described in their own manuals supplied with these operating instructions.

https://www.besttruckmanuals.com/

Section 8 lists the **technical data** of the truck crane.

Even if you are completely familiar with your KMK 5090 and can operate it without difficulty you will need to consult the supplements to these operating instructions frequently

One of the supplements contains the **lifting capacity tables**, **hook heights and SLI codes** of your truck crane.

Outrigger pressure tables are to be found in a further supplement.

The electric, hydraulic and compressed-air circuit diagrams are supplied with each copy of the operating instructions in addition to operating instructions for the diesel engines and automatic gearbox. Maintenance manuals with the identification cards for the diesel engines are also supplied with your crane.

https://www.besttruckmanuals.com/

1.3 Conversion table for metric units

In these operating instructions units are given in metric and in American units. American units are in brackets after the metric units. The conversion factors for converting metric to American units are as follows:

Conversion from	into	multiply by
mm	in	0.03937
m	ft	3.28084
m^2	ft^2	10.76391
cm^2	in^2	0.155
l	gal (US)	0.264178
kg	lbs	2.204622
t	lbs	2204.622
kN	lbf	224.809
daN/cm^2 = bar	lbf/in^2 (psi)	14.50378
m/s	ft/s	3.28084
km/h	mph	0.62137
Nm	lbf ft	0.7375
°C	°F	1.8 x °C + 32
m^2/l	ft^2/lbs	0.004882

https://www.besttruckmanuals.com/

1.4 Vehicle identification

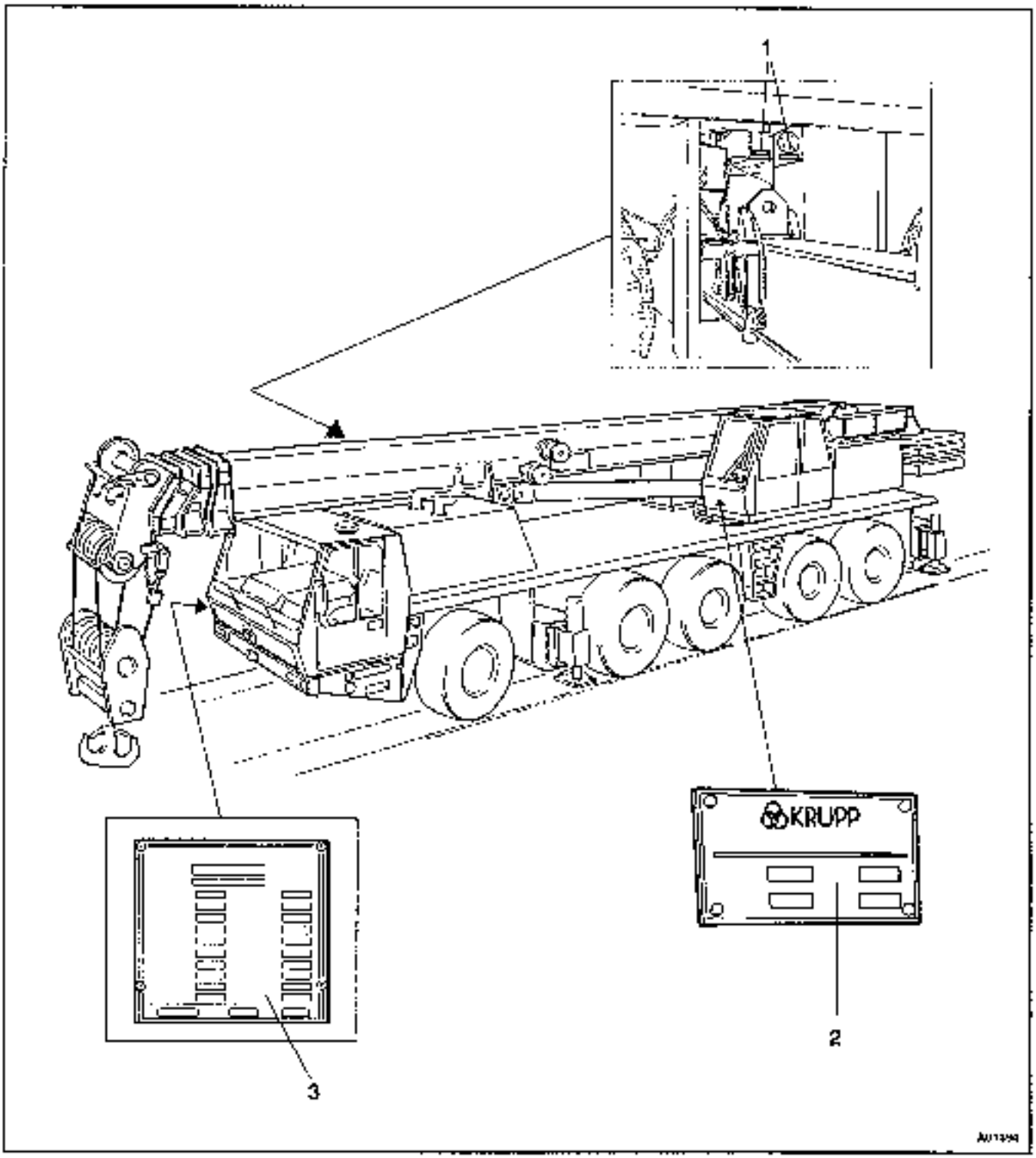

The following plates and numbers are on your truck crane for identification purposes:

- Chassis number (1) on the right-hand side of the carrier above the front outrigger beam
- Name plate (2) on the front of the crane operator's cab (superstructure)
- Crane model plate (3) inside the driver's cab on the control panel on the passenger side

https://www.besttruckmanuals.com/

1.5 General drawing of the truck crane

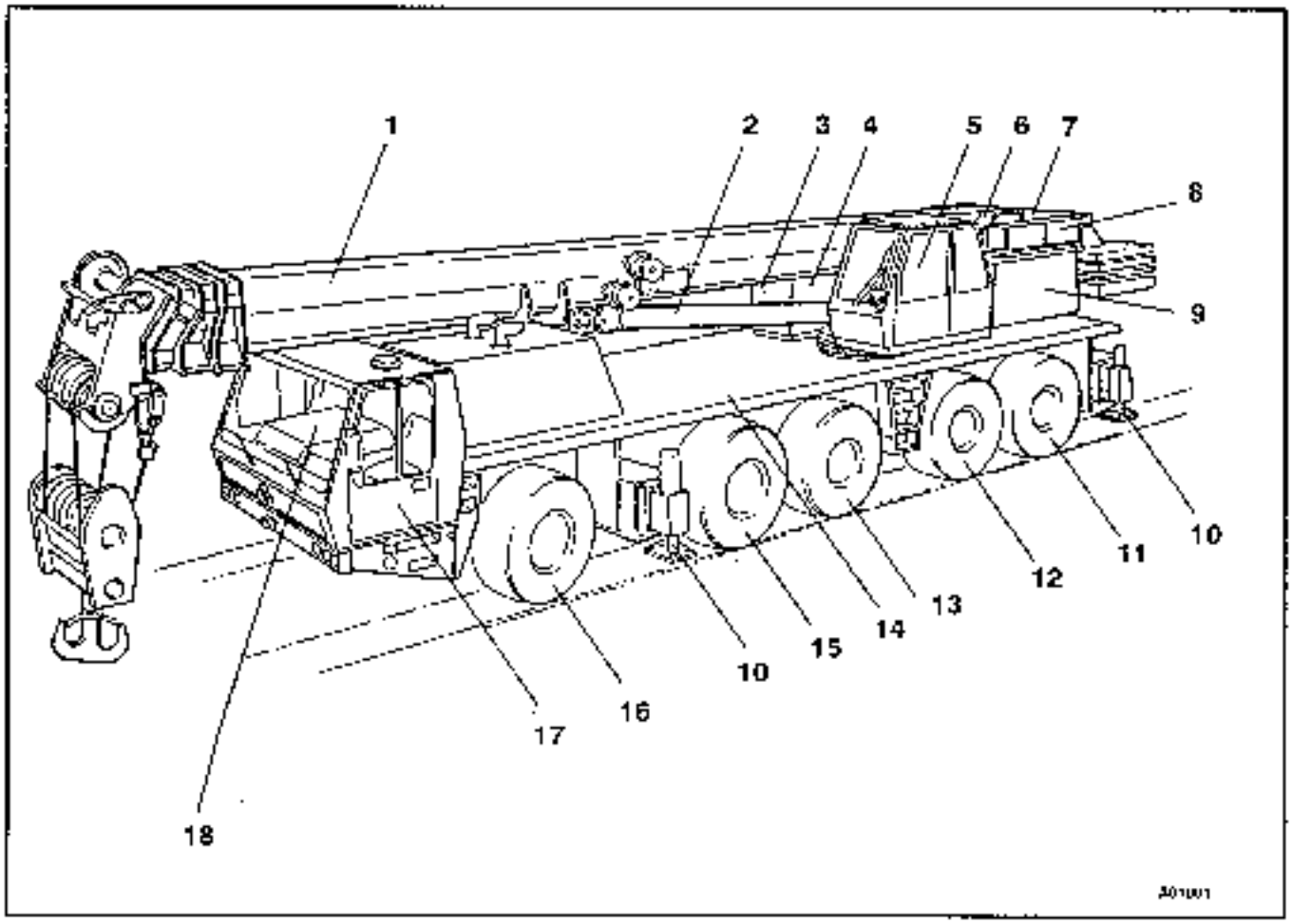

1	Telescopic boom	10	Outrigger
2	Derricking cylinder	11	Fifth axle line, steered and driven
3	Slewing gear	12	Fourth axle line rigid or driven with 10x8 drive (optional equipment)
4	Crane engine	13	Third axle line, steered and driven (can be activated additionally)
5	Crane operator's cab	14	Carrier
6	Main hoist	15	Second axle line, steered and driven
7	Auxiliary hoist (optional equipment)	16	First axle line, steered
8	Hydraulic oil cooler (optional equipment)	17	Driver's cab (carrier)
9	Tank for crane's hydraulic system	18	Carrier engine

https://www.besttruckmanuals.com/

1.6 Technical description of the truck crane

1.6.1 Carrier

The travel drive units, axle lines, suspension system, steering, driver's cab, outriggers and ball bearing slewing rim for slewing the crane superstructure are bolted to the carrier.

Driver's cab

The two-man cab is of lightweight design. It is tipped forwards for engine maintenance work.

The driver's cab is heated via a heat exchanger by the coolant for the engine. An additional water heating system can be provided as part of the optional equipment for preheating the engine and heating the driver's cab.

Drive units

The truck crane is driven by a water cooled Mercedes-Benz diesel engine.

The axle lines are driven via a power shift gear and transfer case. The electronically operated power shift gear can be switched to an "E" (economy) program for driving on level ground and to a "P" (power) program for driving uphill. The transverse differentials in the driven axle lines and longitudinal differential in the fourth axle line (optional equipment with 10 x 8 drive) and transfer case can be locked. For driving off-the-road the third axle line can also be driven.

Engine and gearbox cooling system

The two fan wheels belonging to the cooling water circuit and fan wheel in the charge cooling system are driven hydraulically by three vane type motors. The pumps are driven by the carrier engine via a pump distributor gear. The speed of the fans is regulated according to the temperature of the cooling water and charge air. The temperature of the cooling water is regulated by a thermostat.

A heat exchanger is included in the cooling water circuit to cool the gear oil for the automatic gearbox

Steering

The steering gear is connected mechanically to the first, second, third and fifth axle lines. The dual circuit hydraulic steering system assists steering with the aid of hydraulic cylinders on all steered axle lines

One pump of each of the two gear pump assemblies flanged to the pump distributor gear serves one of the steering circuits. If one of the steering circuits should fail, the vehicle can still be steered, although steering is impaired. If both steering pumps should fail a radial-piston pump on the transfer case supplies oil to steering circuit II. The radial-piston pump only operates while the vehicle is moving, however. The vehicle can not be steered in this mode when it is not moving.

https://www.besttruckmanuals.com/

Suspension system

All wheels are individually suspended from the carrier with hydropneumatic suspension cylinders. The hydraulic system of the suspension system is separated from the carrier's hydraulic system with solenoid valves.

The suspension system is controlled by the gear unit control system and carrier level adjustment system for the different driving modes (e.g. the off-the-road mode).

The suspension cylinders on the first, second and third axle lines and suspension cylinders on the fourth and fifth axle lines are controlled together, forming two suspension groups. Wheel load is transferred equally to all suspension cylinders in a suspension group. The oil which is displaced when the cylinders are compressed is stored in pressure accumulators

The suspension groups must be locked for different driving modes on site and for working with the crane. To lock the suspension cylinders they are separated from the pressure accumulators with pneumatically controlled blocking valves.

By retracting or extending the suspension cylinders the overall height of the vehicle can be altered, or the level of the vehicle can be adjusted in the longitudinal or transverse direction. For setting the suspension system to the on the road mode the solenoid valves are controlled by sensors on the suspension cylinders

Outriggers

Like the suspension system, the outrigger system is supplied with hydraulic oil from the carrier's hydraulic system. The cylinders in the sliding beams and the outrigger cylinders are controlled separately via solenoid valves from both sides of the carrier.

Compressed air system

The compressed air system consists of the air compression system, the service brake, parking brake, and control of secondary consumers

The compressor is driven directly by the carrier engine. The compressor sucks in dust-free air from the engine's air inlet system and conveys the compressed air through the air drier with conditioning unit and pressure regulator through the four-circuit protection valve into the reservoirs.

During the pumping phase the air is drawn through a highly porous drying agent. The dried air flows into the consumer system and into the conditioning unit. During the relief phase the dry conditioned air flows back through the air drier, absorbs humidity from the drying agent and is then blown into the open. At low temperatures a cartridge heater is used to assist the drying process. The compressed air system can be filled through the external filling connection if, for example, the truck crane has to be towed. The tyres can be pumped up with the compressed air system through the tyre inflation hose.

https://www.besttruckmanuals.com/

Service brake

The service brake (foot brake) is divided into two circuits to increase road safety. Circuit I (brake circuit 1) acts on the first and second axle lines and circuit II (brake circuit 2) on the third to fifth axle lines.

All wheels are braked pneumatically via directly controlled diaphragm cylinders. Duplex drum brakes are installed on the wheels of the first axle line, and simplex drum brakes are installed on the wheels of the second to fifth axle lines

If a brake circuit should fail, a warning light lights up in the driver's cab.

Parking brake

The parking brake (handbrake) is in brake circuit (3). It acts indirectly on the second to fifth axle lines via the spring brake cylinders.

The parking brake can also be used as an auxiliary brake The braking force can be varied as required with the parking brake lever

Retarder

The retarder (hydraulic) in the automatic gearbox is switched on electropneumatically.

Secondary consumers

Compressed-air circuit 4 supplies all the truck crane's secondary consumers with compressed air.

Towing

For towing the truck crane can be provided with a towbar coupling (optional equipment). The trailer brake valve is served via a coupling from compressed air circuit 3. The trailer's marker lights are plugged into the carrier's electrical system.

Electrical system

The carrier's 24 V on-board network is fed by the alternator in the carrier engine and by 2 batteries in the battery box under the driver's cab.

The electrical system comprises the vehicle's electrical system on the carrier and the marker lights, position lamps and rotating warning lights on the superstructure which are plugged into the electrical system

https://www.besttruckmanuals.com/

1.6.2 Superstructure

Turntable

The crane engine, the pumps and tanks of the crane's hydraulic system, the telescopic boom, the hoists, slewing gear, derricking cylinder, crane operator's cab and counterweights are installed on the turntable.

Crane operator's cab

All controls for operating the crane are in the crane operator's cab at the front of the turntable on the left-hand side.

The cab is fully glazed with safety glass. The sliding door has a sliding window. The roof window is made of tinted, bullet-proof glass and can be raised to ventilate the cab.

The cab is heated by a heat exchanger with the heat from the coolant for the crane engine. As part of the optional equipment the coolant for preheating the engine and for heating the cab can be heated by an additional water heating system.

Crane engine and crane's hydraulic system

The crane engine is a water-cooled Mercedes-Benz diesel engine. Via a pump distributor gear it drives two axial-piston variable displacement pumps and the triple gear fixed displacement pump for the crane's hydraulic system.

The tank for the crane's hydraulic system is on the turntable behind the crane operator's cab. An oil filter is installed in the return line. At the tank there is a stop cock in the suction line to the hydraulic pumps to allow repairs to be carried out without having to drain the oil.

Telescopic boom

The telescopic boom comprises a non-telescoping boom section (basic section) and 3 telescope sections. The boom can be telescoped under partial load.

The main boom can be extended with an inclinable two-stage swing-away lattice extension (optional equipment). The lattice extension is transported fixed to the non-telescoping section of the main boom.

https://www.besttruckmanuals.com/

Hoists

The hoist is in the rear turntable area. As part of the optional equipment the crane can be provided with an auxiliary hoist which is installed behind the main hoist. The main hoist can be used for working with the main boom and boom extension. The auxiliary hoist is also designed for working with the main boom and boom extension.

The hoists are driven by hydraulic axial-piston variable displacement motors via planetary gears. The load is held by a hydraulically released pressure-spring multiple-disk overrunning brake. The brake is only released during lowering. Lifting is carried out with the brake on, by overrunning.

Both hoists are equipped with electrical lowering limit switches. Five turns of the lifting rope must be left on the drum when the rope is reeled off. Lifting limit switches on the main boom and boom extension prevent the load from being lifted too far.

Slewing gear

The slewing gear is installed on the right-hand side of the turntable. It functions through the meshing of a pinion with the external toothing of the ball bearing slewing rim. The slew drive operates with a hydraulic-vane fixed displacement motor via a planetary gear. The slewing range is unrestricted.

A hydraulic multiple disk brake is installed between the motor and the gear unit.

For moving the crane the superstructure is interlocked mechanically with the carrier.

Derricking cylinder

The boom angle is adjusted with a hydraulic cylinder. The cylinder is hinged on the turntable and on the non-telescoping section of the telescopic boom.

Electrical system

The superstructure's 24 V electrical system is fed by the alternator on the crane engine and by two batteries in the battery box on the right-hand side of the turntable.

The electrical system comprises the crane's electrical system with lights and controls, electro-hydraulic and pneumatic switches, and all safety devices.

https://www.besttruckmanuals.com/

Counterweight

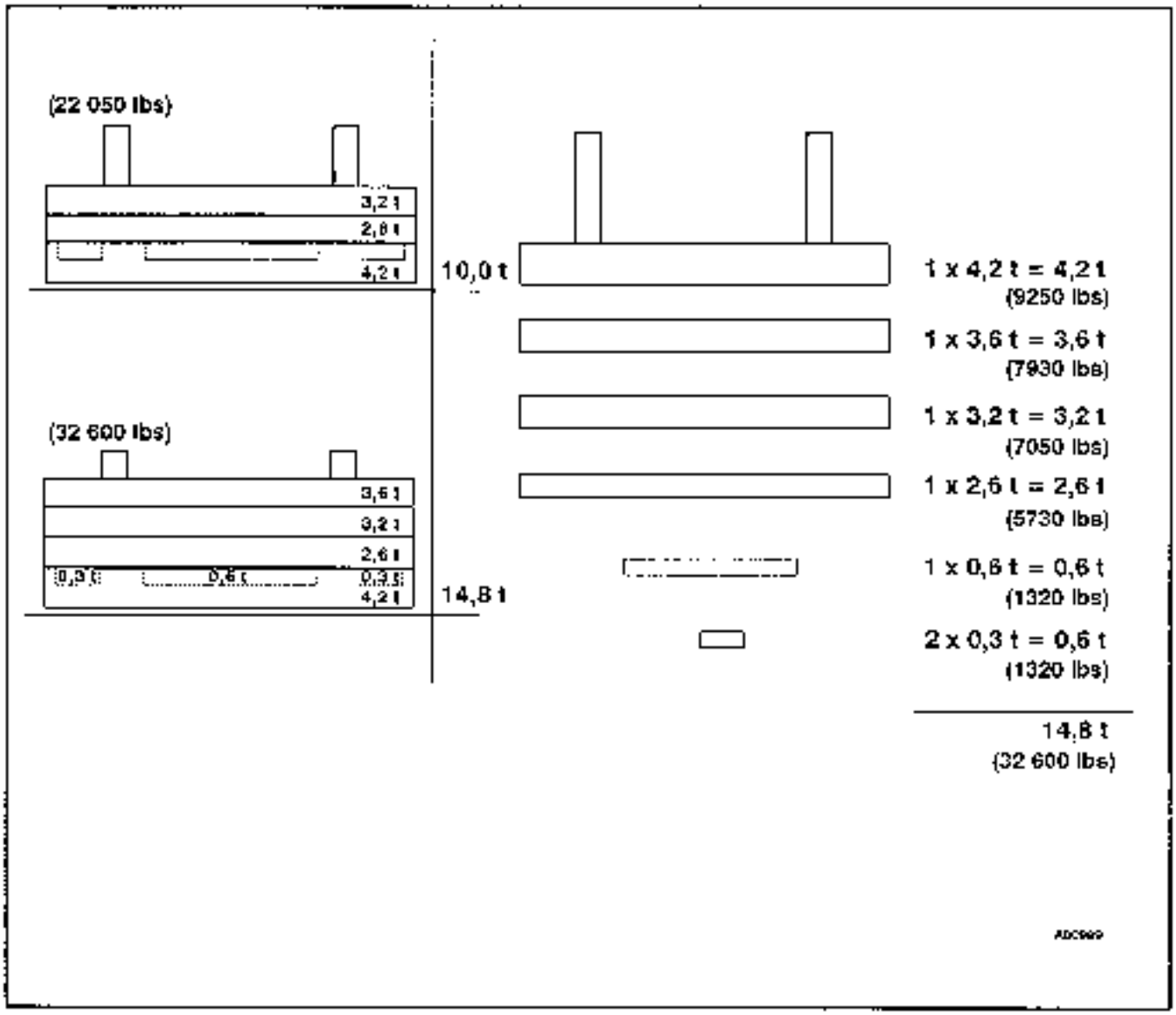

The parts of the counterweight can be assembled to form two different weights:

For driving on roads part of the counterweight can be transported on the truck crane. The table in section 0.2.18 "Weights" shows:

– which counterweights are allowed to be transported on the truck crane
– where the counterweight sections are during transport (carrier, superstructure)

Which counterweight sections are allowed to be transported on the truck crane depends on how the crane is equipped (e.g. with or without the two-stage swing-away lattice extension).

For installing the counterweight the individual counterweight sections are stacked on the carrier with the crane.

https://www.besttruckmanuals.com/

https://www.besttruckmanuals.com/

2. Safety regulations

The KRUPP TRUCK CRANE KMK 5090 is designed and built for erection work in accordance with state-of-the-art engineering and current technical regulations. The laws, regulations, requirements, stipulations and guidelines applying to mobile boom cranes have been observed.

All materials and components, fabrication, quality assurance and inspection processes fulfil the highest requirements made of the safety and reliability of crane vehicles.

If truck crane KMK 5090 is used for the intended application and is operated and looked after correctly, if maintenance work is carried out as prescribed and repairs are carried out by specialists, high performance, high availability and a long life can be expected of the truck crane KMK 5090.

2.1 Road safety

Truck crane KMK 5090 is equipped and licensed for use on public roads. Axle loads and total weight must not exceed the maximum permitted values in the countries in which it is used.

When the crane is driven on roads some of the equipment has to be transported separately, i.e. not on the crane.

All applicable legal stipulations must be observed when the crane is used on public roads, areas, etc

Be particularly careful when driving the crane on public roads if your crane is able to be used with all wheels steered or in the crab movement mode. The crane may only be driven in those modes if it is safe to do so.

https://www.besttruckmanuals.com/

2.2 Accident prevention

The manufacturer accepts no liability for accidents which occur when using truck crane KMK 5090 due to non-compliance by the user with laws, regulations, requirements and rules governing the use of mobile boom cranes.

Truck crane KMK 5090 is designed for use in temperatures ranging from –25°C to +40°C (–13°F to 104°F). It may only be used within this temperature range.

The manufacturer accepts no liability for accidents which occur if the truck crane is used outside this temperature range.

https://www.besttruckmanuals.com/

2.3 Reliability

The manufacturer accepts no liability for breakdowns and damage if truck crane KMK 5090

- is used for purposes other than those for which it is intended;
- is not used, serviced and operated in accordance with the operating instructions;
- is not serviced and maintained as stipulated or if incorrect running and auxiliary materials are used;
- is repaired in a way which is not in compliance with proper professional standards, if incorrect tools are used, or parts other than ORIGINAL KRUPP SPARE PARTS are used;
- is modified or re-equipped without the manufacturer's consent, in particular if the efficacy of the installed safety devices is deliberately reduced or they are rendered inoperable;
- is used outside the permitted temperature range.

https://www.besttruckmanuals.com/

2.4 General safety regulations

2.4.1 Servicing and maintenance

Damage and accidents are often caused by incorrect maintenance, for example:

- insufficient oil, grease or coolant
- dirt
- rope breakages
- faulty emergency limit switches, limit switches or load moment limiting system (SLI)
- faults in the hydraulic system, e.g. damaged hoses or loose couplings
- brake failure
- damaged tyres or wheel rims.

For your own safety, servicing and maintenance work must be carried out meticulously. Never postpone necessary repair work and never allow anyone other than a trained specialist to carry out repairs.

2.4.2 Prior to working with the crane

Even if you are completely familiar with all the controls of the truck crane, the following safety regulations must never be forgotten:

- Never drive faster than is suitable for the prevailing road conditions; check the headroom of bridges, roofing, overhead cables, etc.
- Always keep the windows of the driver's cab and the crane operator's cab clean.
- Before starting work, check that all movements, limit switches, brakes and overload protection devices are working correctly.
- Check continually that there is no one within the danger area of the crane; sound the horn as a warning and stop work if there are persons in the danger area.
- No persons are permitted to ride on the carrier or to be in the crane operator's cab on the superstructure when the crane is driven.
- No persons are allowed to be carried on the load, lifting tackle or lifting gear.
- You must never leave the crane operator's cab while there is a load attached to the hook or while the crane is being used.
- Above all, always keep your eye on the load, hook and the end of the boom while crane movements are being carried out.

https://www.besttruckmanuals.com/

2.4.3 Hand signals for the banksman

If you are unable to see the load all the time, or cannot see it clearly, a banksman must guide you. Walkie-talkies or hand signals can be used to communicate.

To prevent misunderstandings, the following hand signals are recommended:

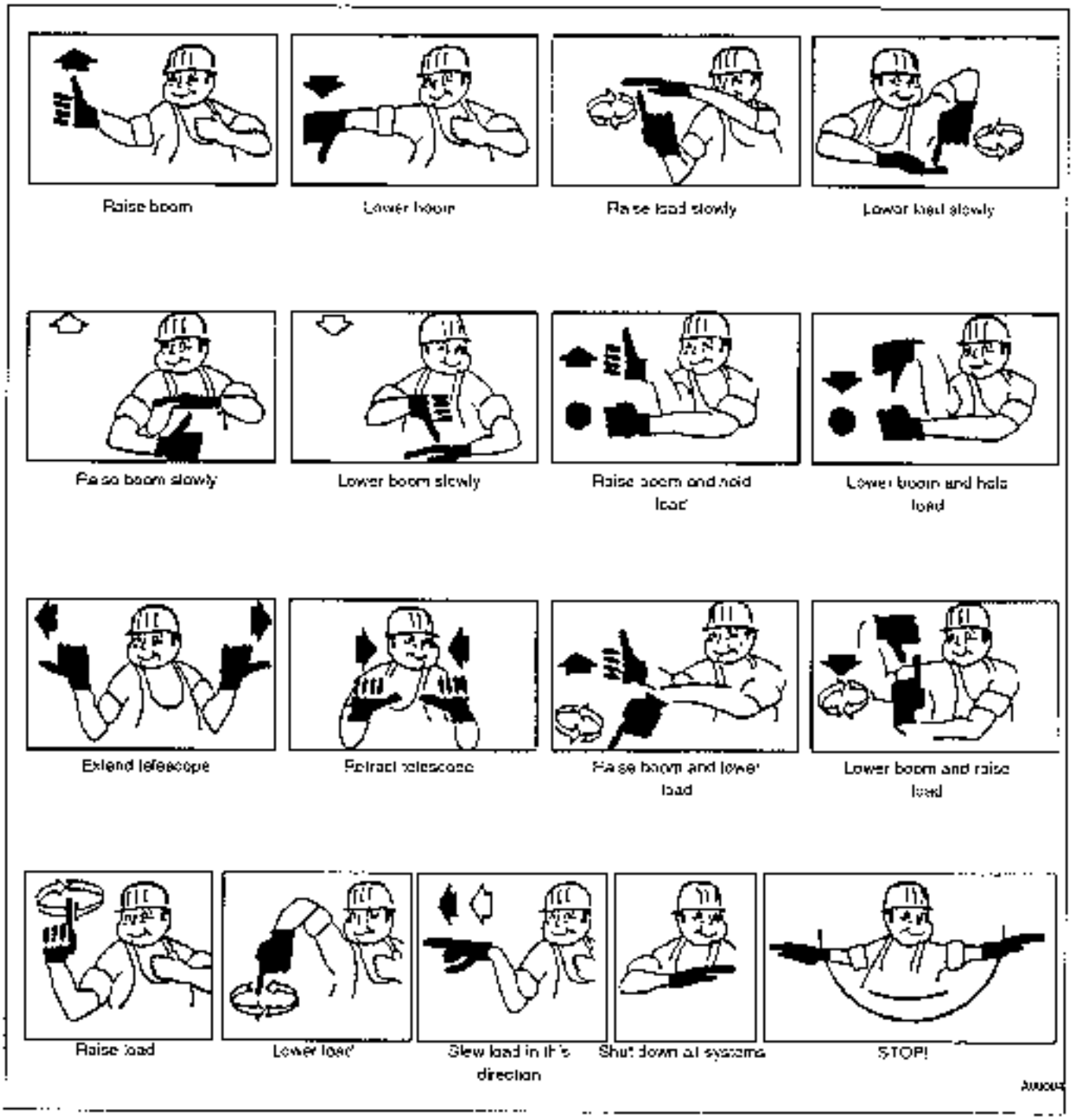

https://www.besttruckmanuals.com/

2.4.4 Load bearing capacity of the ground; outriggers

Select the right position for the truck crane on the site with care. The most important factor is that the ground can withstand the pressures which have to be supported. Select a position which allows the radius to be kept as small as possible and ensure that there are no obstructions in the crane's slewing area.

Always extend all four sliding beams of the outriggers to the span stipulated in the lifting capacity tables. Never slew the superstructure out of the transport position before the carrier has been supported and the suspension has been locked.

The outrigger pads transfer the supporting forces to the ground. If the surface pressure of the outrigger pads exceeds the permissible ground pressure, the surface area of the outriggers must be increased by packing them with stable material such as wooden planks. The outrigger pads should be in the centre of this packing.

The required surface area for supporting the crane can be calculated from the outrigger pressures and the load bearing capacity of the ground.

The outrigger pressures for the particular job can be found in the outrigger pressure tables. The maximum permitted outrigger pressures and outrigger pad sizes are stipulated in Section 8. "Technical data".

The following table provides a guide to the load bearing capacity of the ground.

Type of ground	Load bearing capacity (daN/cm²)	Load bearing capacity (lbs/in²)
Backfilled ground, not artificially compacted	0.0 to 1.0	0.0 to 14.5
Grown soil, clearly untouched:		
1. Mud, peat, marsh	0.0	0.0
2. Non-cohesive ground which is sufficiently firm.		
– Medium to fine sand	1.5	21.8
– Coarse sand and gravel	2.0	29.0
3. Cohesive ground.		
Mushy	0.0	0.0
– Soft	0.4	5.8
– Firm	1.0	14.5
– Semi-solid	2.0	29.0
– Hard	4.0	58.0
4. Rock with minimal fissures in sound, unweathered condition and with favourable strata:		
– with a compact succession of beds	15.0	217.6
– of solid or columnar formation	30.0	435.1

https://www.besttruckmanuals.com/

Note: If you are in doubt about the load bearing capacity of the ground on the site the ground should be tested, using a ram probe for example.

The required surface area for supporting the crane can now be calculated:

Surface area of support = outrigger pressure : load bearing capacity of ground ***A = S : T***

Always ensure that the outrigger packing material is level horizontally (adjust if necessary), and always align the truck crane horizontally with the outrigger cylinders.

Caution: If the truck crane is inclined to one side the crane may overturn.

2.4.5 Safe distance from slopes and pits

Set up the crane at a safe distance from slopes or pits. In the case of unsupported slopes and pits this distance also depends on the type of ground.

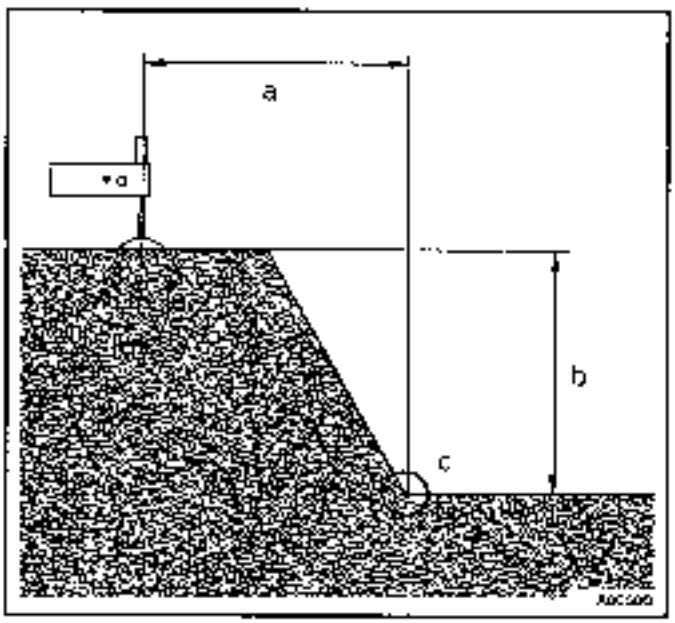

Rule of thumb:

- for *loose or backfilled* ground the distance (a) must be twice the depth of the pit (b).

  a = 2 x b

- for *grown, cohesive ground* the distance (a) must be equal to the depth of the pit (b).

  a = 1 x b

The distance is measured from the base of the pit (c).

https://www.besttruckmanuals.com/

2.4.6 Safe distance from electric cables

Always keep a safe distance from electric cables in the working area of the truck crane. This is particularly important if there are overhead cables in the danger area which have not been disconnected or covered by electrical specialists

Nominal voltage	Minimum distance m	Minimum distance ft
up to 1000 V	1	3.3
over 1 kV to 110 kV	3	9.8
over 110 kV to 220 kV	4	13.1
over 220 kV to 380 kV	5	16.4

Danger:

Always keep a safe distance from uncovered electric cables.
Observe the regulations in the country in which you are working.

If the nominal voltage of a cable is not known always keep the crane at least **5 m (16.4 ft)** away from the cable

If, despite due care, you have touched a cable with the crane:

- keep calm
- do not leave the crane operator's cab
- warn all persons outside to stay where they are and not to touch the crane
- move the crane out of the danger area
- If you have to get out of the crane you must on no account be touching the crane when you step onto the ground so do not climb down from the crane operator's cab, jump!

2.4.7 Counterweight

Look up the counterweight which is required for the particular job in the lifting capacity tables.

When assembling the counterweight, secure the locking pins

https://www.besttruckmanuals.com/

2.4.8 Hoisting capacity and lifting capacity

The hoisting capacity of the crane depends on the lifting capacity of the hoist and the number of falls on the hook block. The hoisting capacity is never greater than the lifting capacity of the hoist multiplied by the number of falls between the boom head and the hook block. Please read the information on the number of falls (reeving).

When calculating the required lifting capacity, please note that the weight of the hook block and lifting tackle must be added to the weight of the load itself.

The load which can be lifted with the crane is therefore lower than the value given in the table.

2.4.9 Effect of wind on crane operations

Overloading can occur in strong winds.

Please refer to the **lifting capacity tables** for maximum permissible wind speeds with the crane under full load.

What to do if the maximum permitted wind speed is exceeded

Wind speed below 20 m/s (65 ft/s)	Wind speed above 20 m/s (65 ft/s)	
Crane used with main boom or two-stage lattice extension	**Crane used with main boom**	**Crane used with two-stage lattice extension**
• Lower load. • Turn superstructure into the wind.	• Lower load. • Telescope boom in fully • Turn superstructure to front (0°) or rear (180°) of truck crane and lock it. If possible place boom on boom support	• Lower load. • Telescope boom in fully • Lower boom to horizontal position

https://www.besttruckmanuals.com/

Permissible wind load

The surface area of the load which provides wind resistance must not be greater than approx. 1 m^2 per tonne (= 0.8 ft^2/lbs = 1 m^2/t) of the load.

This wind surface depends on the aerodynamic force coefficient c_f of the load. In the case of c_f values above 1.2 (c_f values as per DIN 1055, part 4) and wind surfaces which are larger than 1 m^2 per tonne (10.8 ft^2/lbs) of the load, the wind surface of the load must be reduced proportionally. This must be agreed with the supervisor.
Formula:

$$V_{red} = V \cdot \sqrt{\frac{1,2}{c_f \cdot A'}}$$

V_{red}	reduced permissible wind speed in m/s
V	maximum permissible wind speed according to the lifting capacity tables in m/s
c_f	actual aerodynamic force coefficient
A'	actual specific surface area of the load in m^2/t (10.8 ft^2/lbs = 1 m^2/t)

https://www.besttruckmanuals.com/

Anemometer

An anemometer is installed on the end of the boom for measuring the wind speed. When a boom extension is installed or removed it must be moved to the new position.

Wind strength		Wind speed		Effect of wind inland
Beaufort scale	Description	m/s (ft/s)	km/h (mph)	
0	Calm	0 to 0.2, (0 to 0.7)	1 (0.6)	No wind, smoke rises vertically
1	Slight air movement	0.3 to 1.5 (1.0 to 4.9)	1 to 5 (0.6 to 3.1)	Wind direction indicated only by movement of smoke, but not by wind-T.
2	Slight breeze	1.6 to 3.3 (5.3 to 10.8)	6 to 11 (3.7 to 6.8)	Wind noticeable on face, leaves rustle, wind-T moves.
3	Light breeze	3.4 to 5.4 (11.2 to 17.7)	12 to 19 (7.5 to 11.9)	Leaves and thin twigs move, wind extends pennants.
4	Moderate breeze	5.5 to 7.9 (18.0 to 25.9)	20 to 28 (12.4 to 17.4)	Dust and loose paper are lifted, twigs and fairly thin branches move.
5	Fresh breeze	8.0 to 10.7 (26.2 to 35.1)	29 to 38 (18.0 to 23.6)	Small, deciduous trees begin to sway. White horses formed on lakes.
6	Strong wind	10.8 to 13.8 (35.4 to 45.3)	39 to 49 (24.2 to 30.5)	Thick branches move, telegraph wires whistle, umbrellas difficult to use.
7	Near gale	13.9 to 17.1 (45.6 to 56.1)	50 to 61 (31.1 to 37.9)	Whole trees move, noticeable resistance when walking into the wind.
8	Gale	17.2 to 20.7 (56.4 to 67.9)	62 to 74 (38.5 to 46.0)	Twigs broken off trees, very difficult to walk.
9	Strong gale	20.8 to 24.4 (68.2 to 80.0)	75 to 88 (46.6 to 54.7)	Minor damage to houses (smoke hoods and roof tiles are dislodged).
10	Storm	24.5 to 28.4 (80.4 to 93.2)	89 to 102 (55.3 to 63.4)	Trees uprooted, considerable damage to houses.

https://www.besttruckmanuals.com/

2.5 Operating errors

Undue care or lack of knowledge can lead to dangerous situations during crane operation. Some examples are listed below.

- The suspended load is too heavy. You must always ensure that the load to be lifted does not exceed the lifting capacity of the crane. Particularly during demolition work damage and accidents can occur when loads which are too heavy for the crane are freed from their supporting structures so that they are then suspended from the crane.
- The load is raised from the ground by raising the boom.
- The load or lifting tackle (chains, ropes, etc.) catches on something during lifting, the hoist does not cut out quickly enough and the crane is overloaded.
- When lowering a heavy load the downwards movement is stopped too quickly. The excessive deceleration forces overload the crane.
- An object hits the hoist rope from which a load is suspended. The increasing tension within the rope overloads the crane.
- A load is pulled diagonally or dragged across the ground, subjecting the boom to excessive lateral forces.
- When the load is driven on the site with the counterweight installed and the boom raised the crane slopes to the side and may overturn.
- The ground collapses due to insufficient load bearing capacity or inadequate packing of the outriggers and the truck crane is no longer level. The crane may tip over!
- The crane is operated in winds. Gusts are particularly dangerous.
- Boom extensions are not installed correctly.
- The permissible lifting load is exceeded when working with two hooks.
- The load is not suspended correctly. The lifting tackle breaks (chains, ropes, etc.) or the load falls to the ground. The boom which was tensioned by the load flies back, and the crane may tip over backwards.
- The load to be lifted is stuck. Even if the permitted load capacity is not exceeded by the weight of the load, the boom may fly backwards when the load is suddenly freed, and the crane may overturn
- The load swings. The load can start to swing due to incorrect handling (e.g. if the load is slewed too fast). This endangers the stability of the crane

https://www.besttruckmanuals.com/

2.6 Load moment limiting system ("SLI")

To increase safety and reliability truck crane KMK 5090 is equipped with a load moment limiting system known as "SLI" (safe load indicator).

Danger: The SLI is a safety system for one-hook operation only.
Two-hook operation is not protected by the SLI.
Operating the crane with two hooks can overload the crane and as a result it may overturn

The purpose of the SLI is to prevent the permissible lifting capacity of the truck crane from being exceeded. The maximum permissible lifting capacity may be exceeded for example if the boom is telescoped out or lowered further than originally planned during crane operation.

The SLI is an electronic device. Sensors are installed on the truck crane which supply the central electronic system with data on the current load condition. The actual load value and the maximum permissible load value are indicated continuously on the SLI control unit in the crane operator's cab. Before the maximum load limit is reached an alarm is sounded. If the load moment increases further and the maximum load limit is exceeded the load moment limiting system shuts down all control circuits for crane movements which increase the load moment

Danger: **The SLI does not register all factors which are necessary for calculating the maximum load limit during crane operation automatically.** Some of these factors have to be entered manually on the SLI control unit with the operating mode and reeving mode selector switches.

The SLI automatically registers the following factors:

- length of the telescopic boom
- boom angle
- pressure load of the derricking cylinder.

The following factors must be entered manually:

- whether the crane is free-on-wheels or supported by outriggers
- the weight of the installed counterweight
- the number of hoist rope falls
- the angle and length of the boom extension

https://www.besttruckmanuals.com/

Danger:

If these factors concerning the current operating mode are not entered the maximum load calculated by the SLI is not the actual permissible load.
An incorrectly set safe load indicator gives the crane operator a false sense of security. The consequence is certain to be overloading of the truck crane and hence accidents.

However, even if the SLI is set correctly and working properly it can not prevent accidents which are caused by operating errors and which lead to overloading of the truck crane.

The SLI override must never be used while you are working with the crane, e.g. for lifting loads which exceed the maximum lifting capacity.

Danger:

Never activate the SLI override before measures have been taken to ensure that the truck crane can not be overloaded and can not overturn.

It is strictly forbidden to work with the crane while the SLI is switched off, overridden, out of action, or not working properly

https://www.besttruckmanuals.com/

3. Driving

The truck crane may only be driven on public roads if it is in the prescribed transport condition. Details applying specifically to the transport condition of truck crane KMK 5090 are given below. In addition all laws, stipulations and regulations applying to the road safety of motor vehicles and to the use of public roads must of course be complied with

3.1 Prescribed condition for driving the truck crane on roads

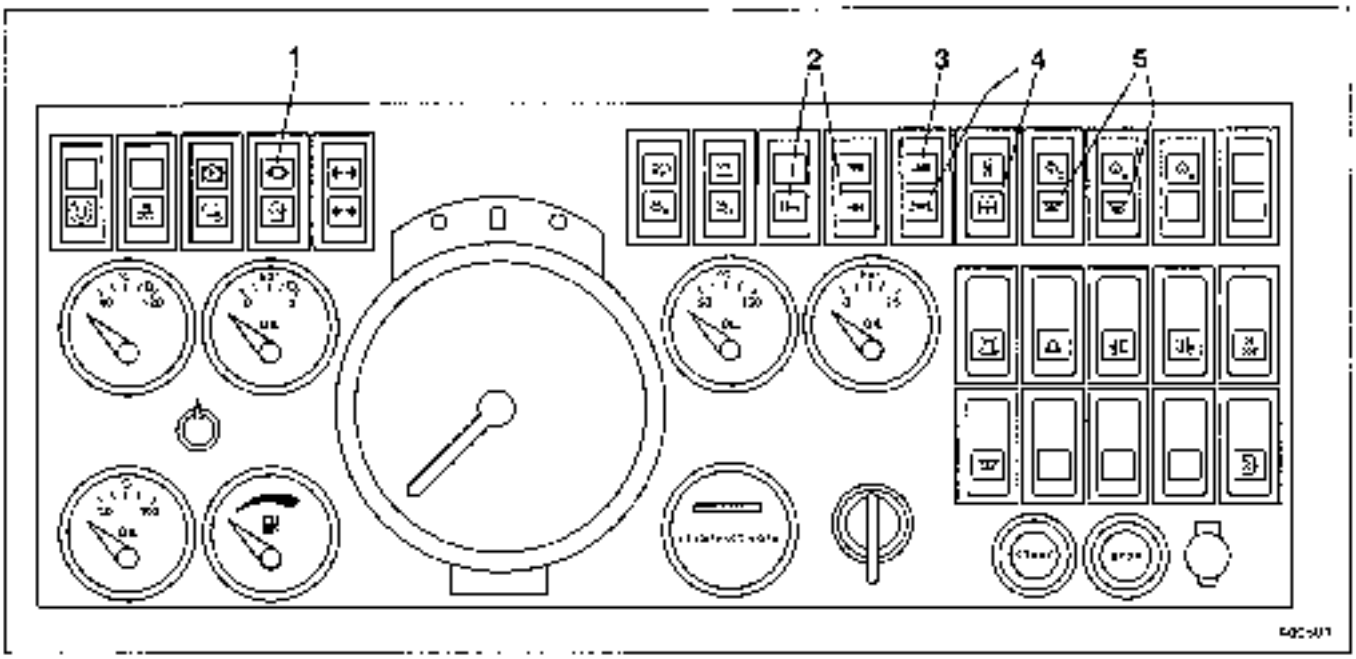

The compressed-air and brake system must be filled; warning light (1) must be off (please see Section 3.4.21 "Checking the compressed air system and brake system").

The transfer case is switched to the on-the-road mode, indicator lamp (3) must be on (please see Section 3.4.14 "Changing the transfer case to the on-the-road gear")

All differential locks and driving of the third axle line must be disengaged; indicator lamps (2) and (4) must not be on (please see Section 3.4.16 "Checking that the level of the carrier is correct for driving on roads").

The suspension must not be locked, indicator lamps (5) must not be on (please see Section 3.4.15 "Checking the suspension system").

https://www.besttruckmanuals.com/

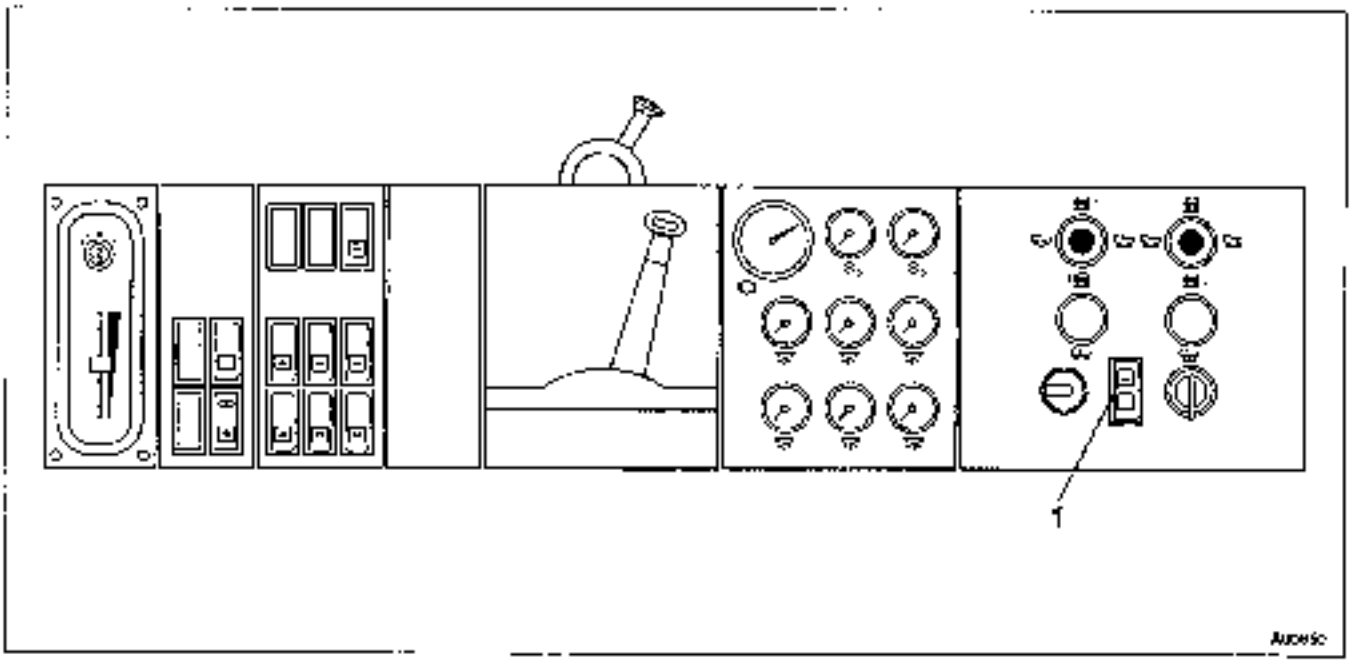

The carrier level adjustment system is set for driving on roads; warning light (1) must not be on (please see Section 3.4.16 "Checking that the level of the carrier is correct for driving on roads").

https://www.besttruckmanuals.com/

3.1.1 Prescribed transport condition with the boom placed on the crane

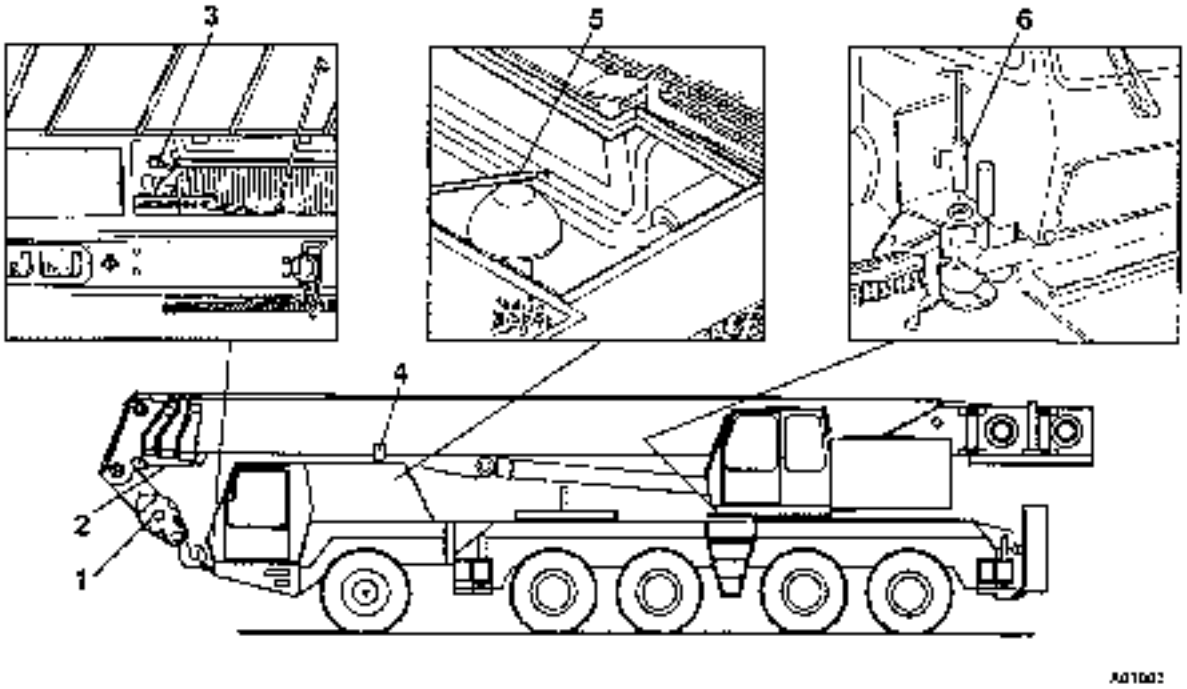

1 Hook block either secured in the front towbar coupling with an endless rope or placed in the holder in front of the crane operator's cab (please see Sections 8.2.18 "Weights" and 4.6.1 "Picking up the hook block").

2 Telescope section III secured to the non-telescoping section of the boom with a holding rope to prevent it from sliding out

3 The oil level in the carrier engine must be checked (please see Section 3.4.4 "Checking the oil level in the carrier engine").

4 The boom must be lying on the supporting block.

5 The oil level in the automatic gearbox must be checked (please see Section 3.4.5 "Checking the oil level in the automatic gearbox").

6 Mechanical superstructure lock engaged; pins inserted.

https://www.besttruckmanuals.com/

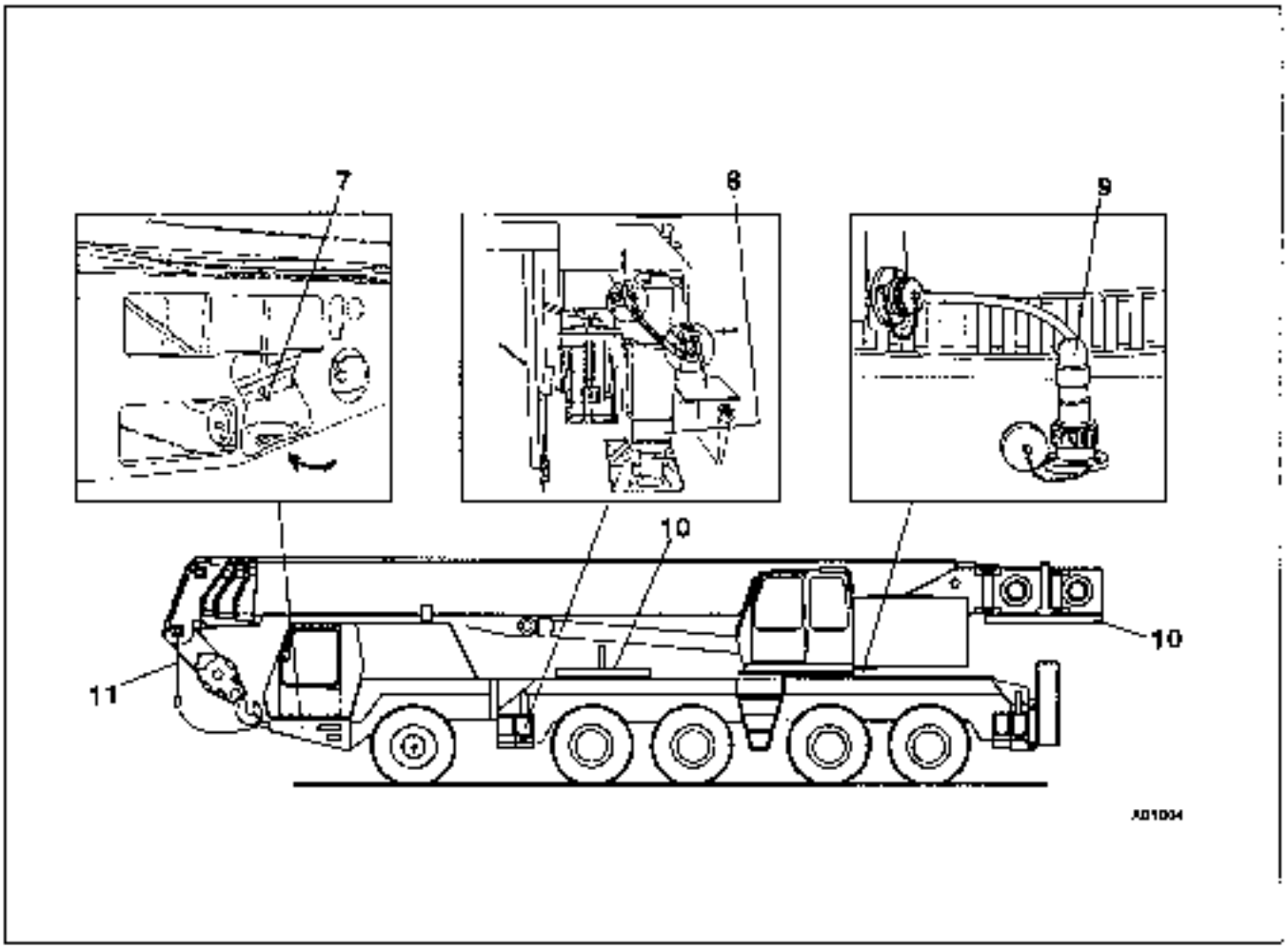

7 Battery master switch on the right-hand side of the vehicle switched on (please see Section 3.4.6 "Switching on the battery master switch").

8 All four outriggers retracted and the outrigger beams secured with holding ropes (please see Section 4.3.4 "Outriggers").

9 Electrical supply connected to the superstructure; plug inserted in the socket.

10 Counterweight section placed on the carrier or mounted on the superstructure (please see Section 8.2.18 "Weights" and 4.5.4 "Counterweights").

11 Holder for front marker lights installed. Plug inserted in the socket on the bumper.

https://www.besttruckmanuals.com/

3.1.2 Prescribed transport condition with the boom placed on a trailer

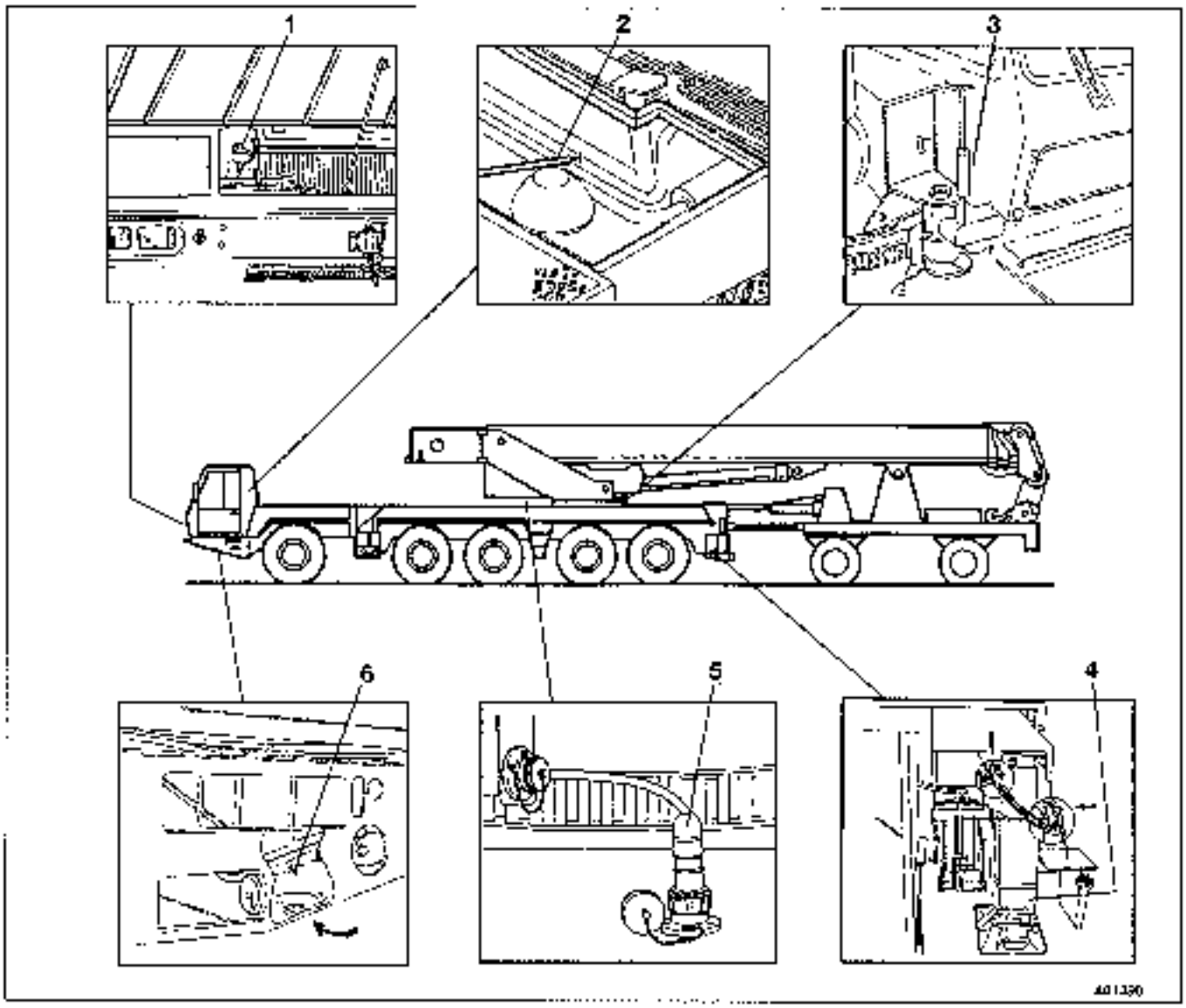

1 The oil level in the carrier engine must be checked (please see Section 3.4.4 "Checking the oil level in the driving engine").

2 The oil level in the automatic gearbox must be checked (please see Section 3.4.5 "Checking the oil level in the automatic gearbox").

3 Mechanical lock for locking the superstructure not engaged; pin in the holder.

4 All four outriggers retracted and outrigger beams secured with holding ropes (please see Section 4.3.4 "Outriggers").

5 The electrical supply must be connected to the superstructure; the plug must be in the socket.

6 Battery master switch on the right hand side of the vehicle switched on (please see Section 3.4.8 "Switching on the battery master switch").

https://www.besttruckmanuals.com/

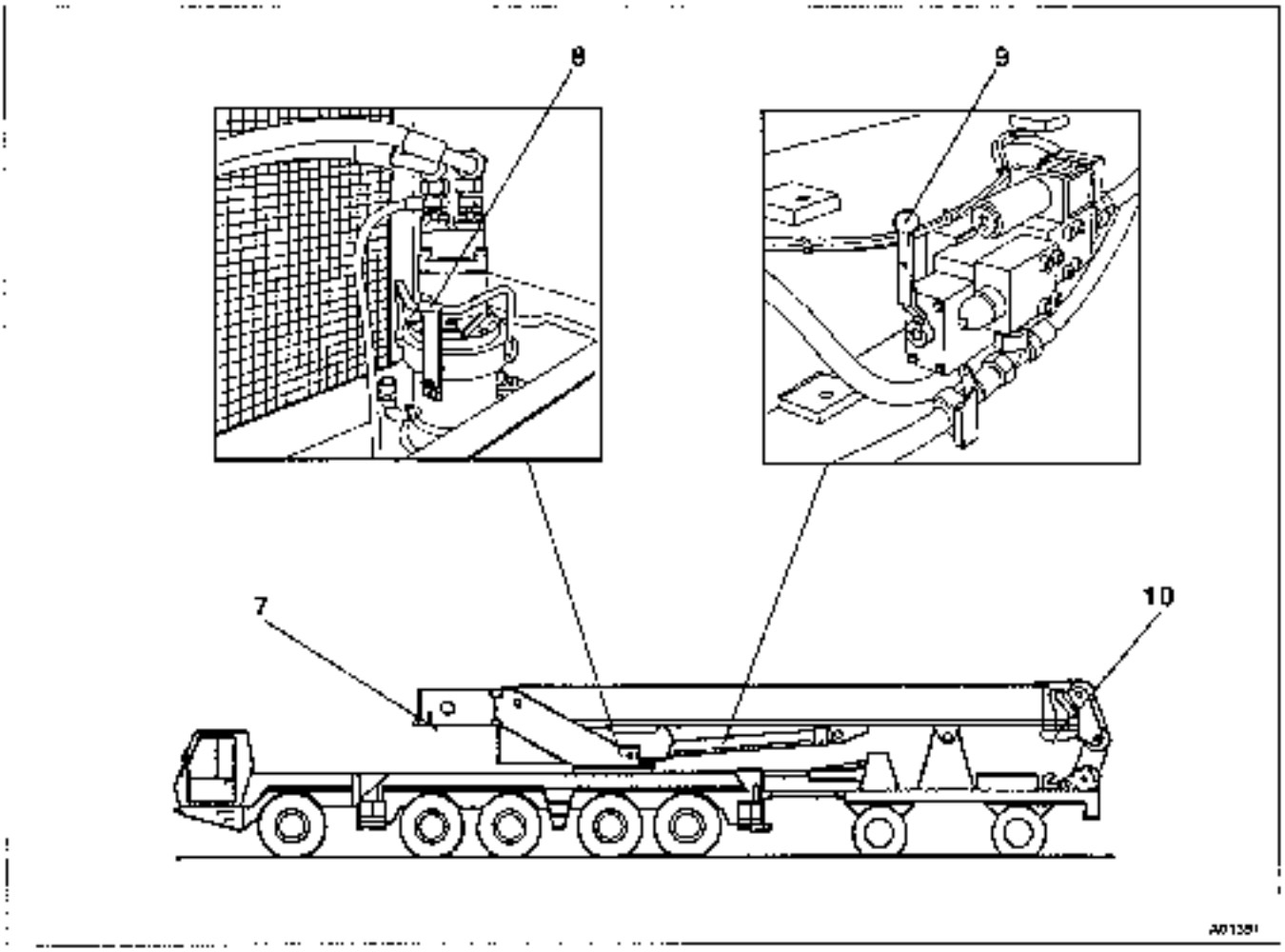

7 Counterweight placed on the carrier or mounted on the superstructure (please see Section 8.2.18 "Weights").

8 Free movement position for slewing gear engaged (please see Section 3.4.9 "Engaging the free movement position for the slewing gear").

9 Free movement position for boom engaged on (please see Section 3.4.10 "Engaging the free movement position for the boom").

10 Telescope section III tied to the non-telescoping section of the boom with a holding rope to prevent it from sliding out.

https://www.besttruckmanuals.com/

3.2 Driver's cab on carrier

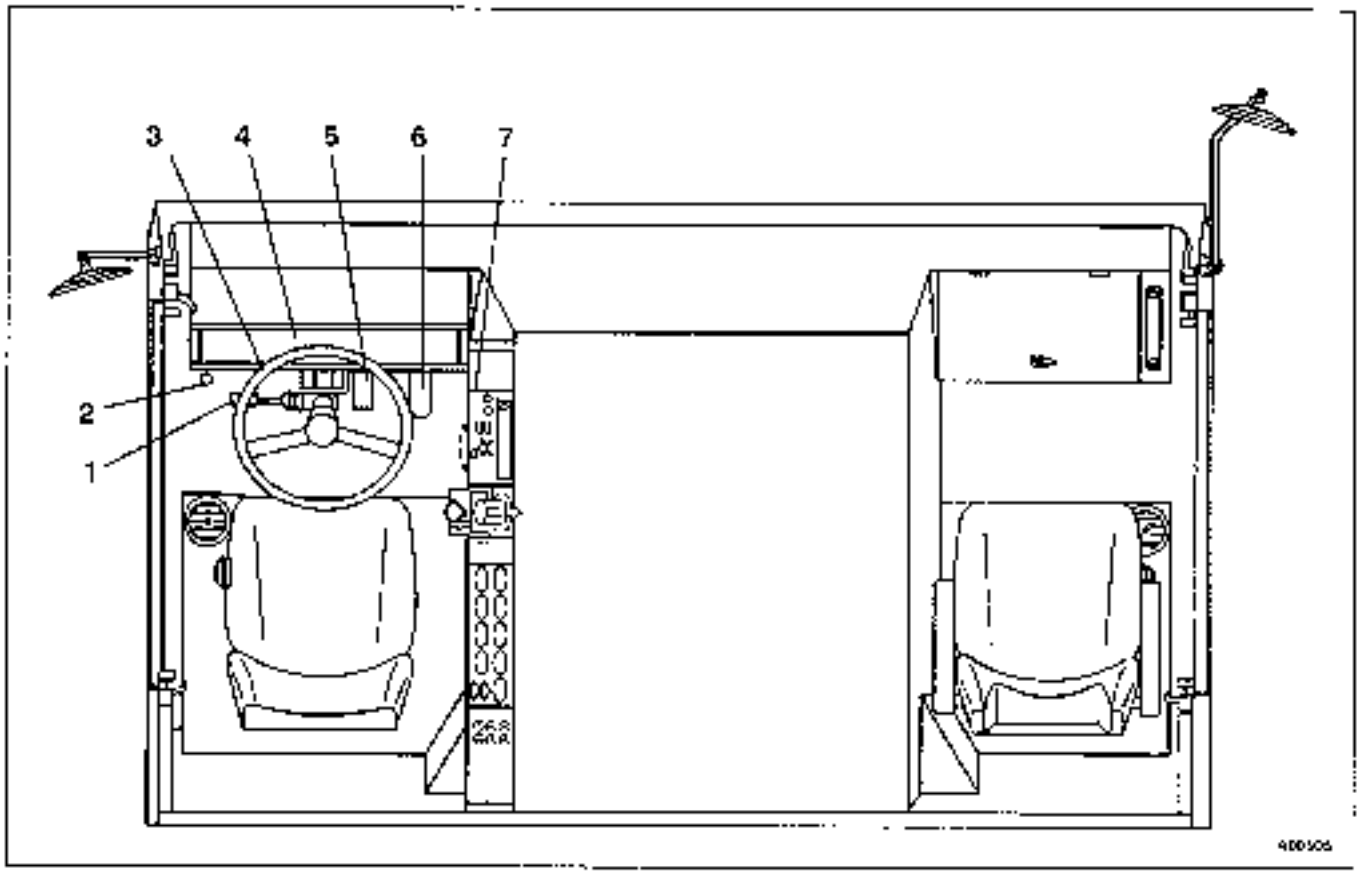

1 Multipurpose switch

2 Retarder switch

3 Steering wheel with adjustable steering column

4 Front instrument panel

5 Service brake pedal

6 Accelerator

7 Side instrument panel

https://www.besttruckmanuals.com/

Multipurpose switch

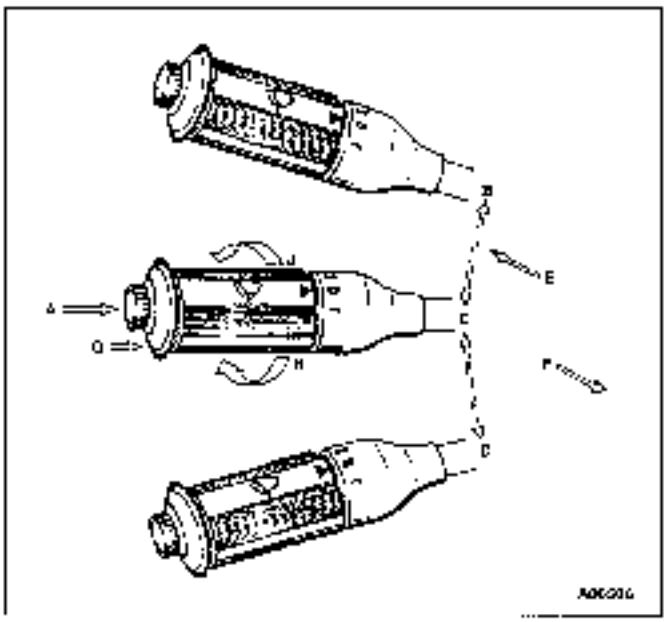

A Horn

B Headlight flasher

C Headlights or parking lights*)

D Full beam

E Right indicator

F Left indicator

G Windscreen washing system

H Intermittent wiper position

J Windscreen wipers (setting I and II)

*) The lights are switched on with the combined lighting and ignition switch.
- position **2** of the ignition switch = parking lights
- position **3** of the ignition switch = headlights

Above the windscreen

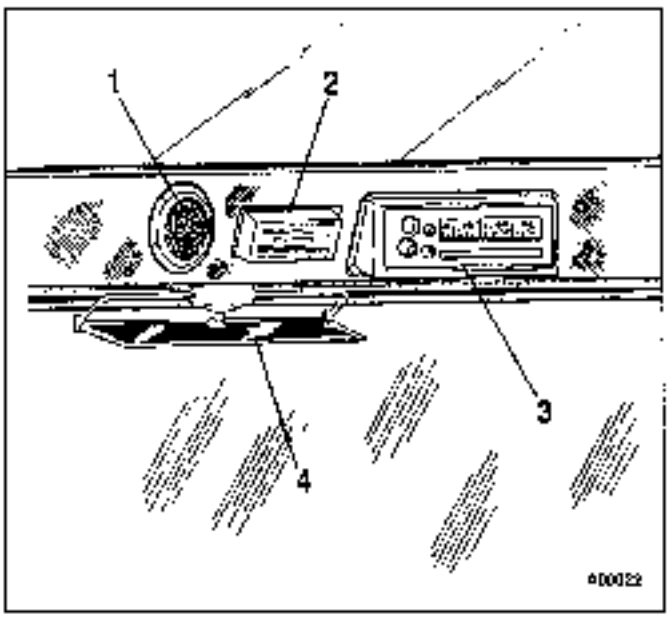

1 Loudspeaker

2 Cab lighting

3 Radio

4 Sun screen

https://www.besttruckmanuals.com/

3.2.1 Front instrument panel

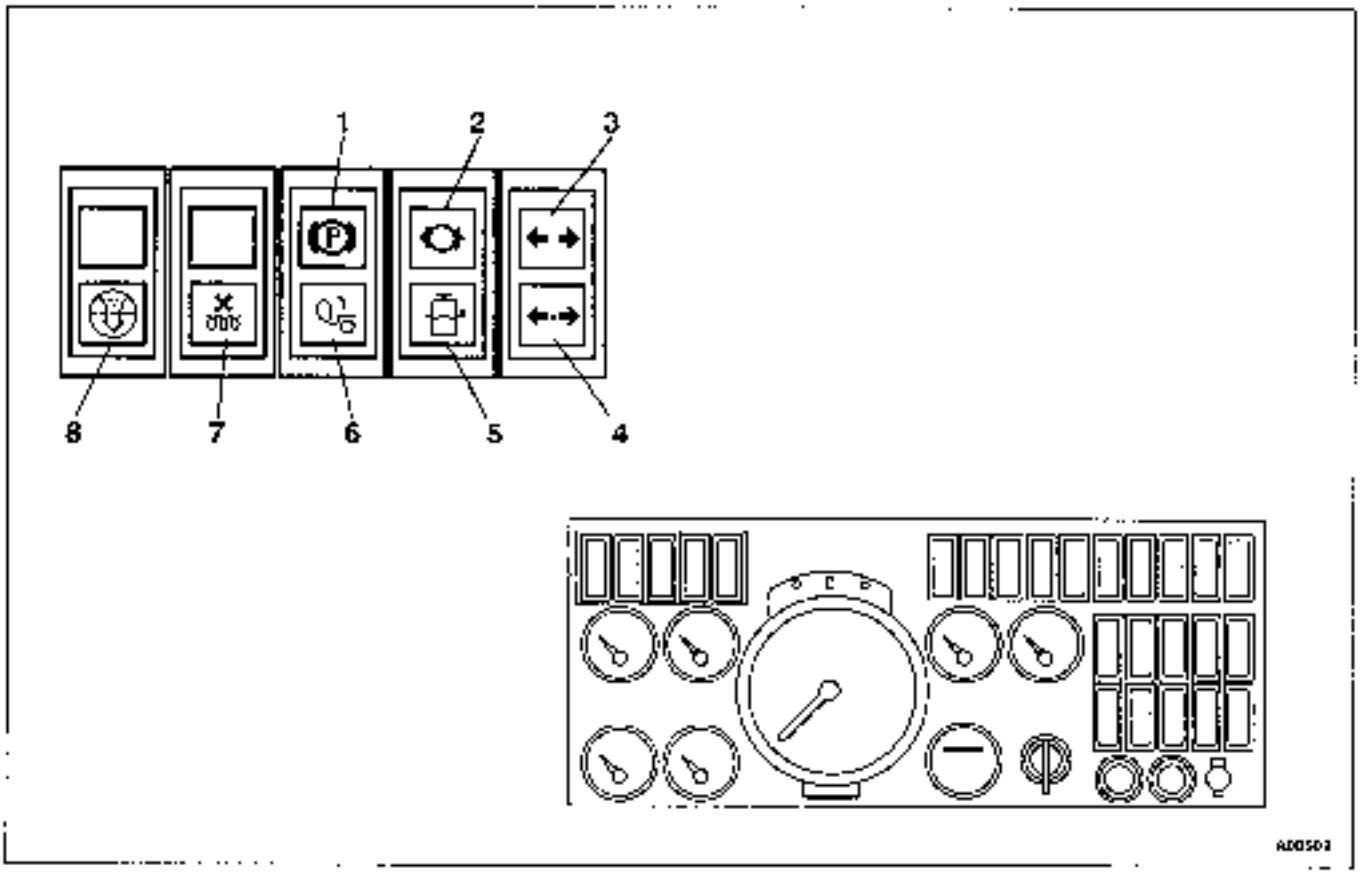

1 Indicator lamp for parking brake

2 Warning light brake supply pressure

3 Indicator lamp 'indicators'

4 Indicator lamp "trailer indicators" (optional equipment)

5 Warning light 'cooling water level in carrier engine'

6 Warning light "driver's cab not locked'

7 Indicator lamp additional heating system (optional equipment)

8 Warning light "air filter in carrier engine'

https://www.besttruckmanuals.com/

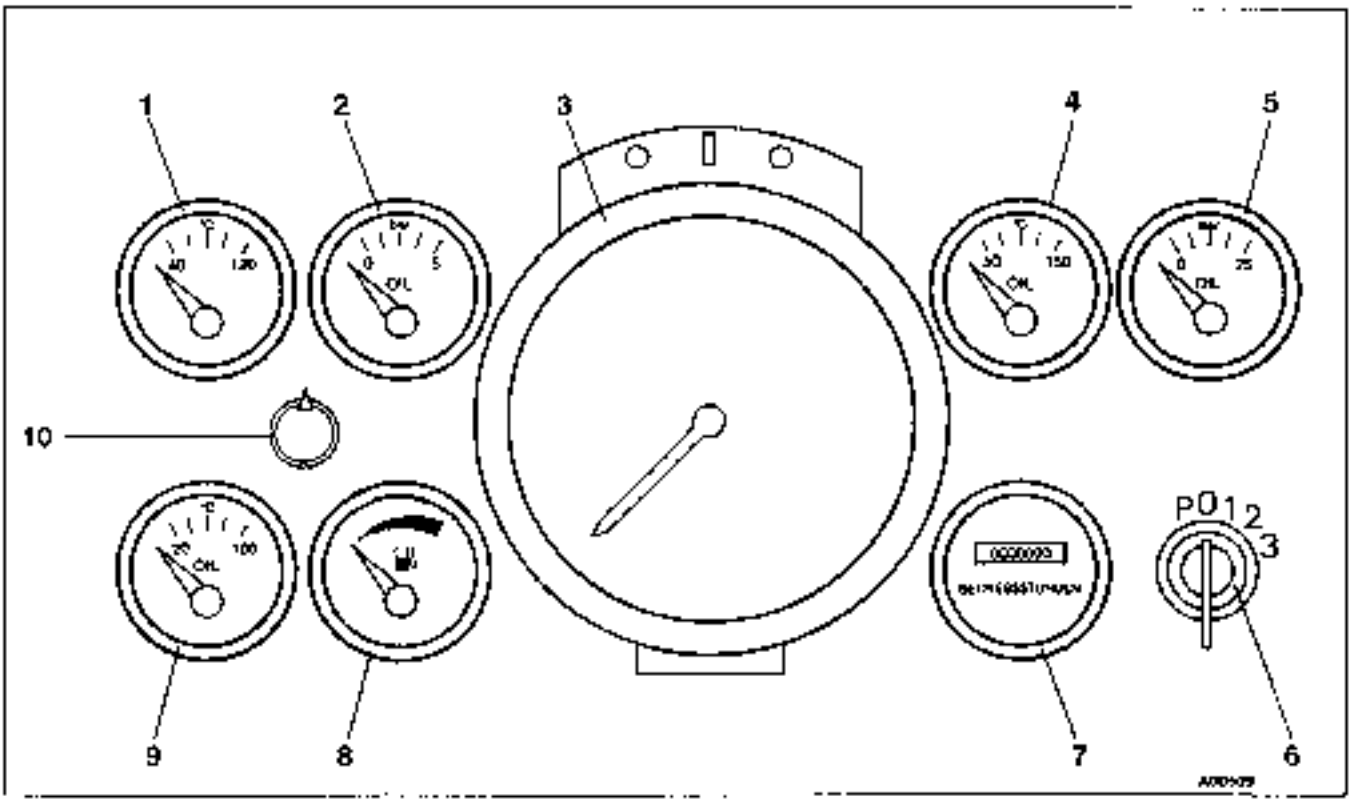

1 Driving engine coolant temperature gauge with warning light

2 Engine oil pressure gauge for driving engine with warning light

3 Tachograph with speedometer

4 Gear oil temperature gauge

5 Gear oil pressure gauge

6 Combined lighting and ignition switch
The key can only be removed in positions **P** and **O**
- **P** Parking lights (parking and marker lights)
- **O** Ignition and lights off
- **1** Ignition on and lights off
- **2** Ignition and parking lights on
- **3** Ignition and headlights with parking lights on

7 Operating hour counter for driving engine

8 Fuel gauge for carrier

9 Oil temperature gauge, carrier's hydraulic system

10 Instrument panel lighting (dimmer)

https://www.besttruckmanuals.com/

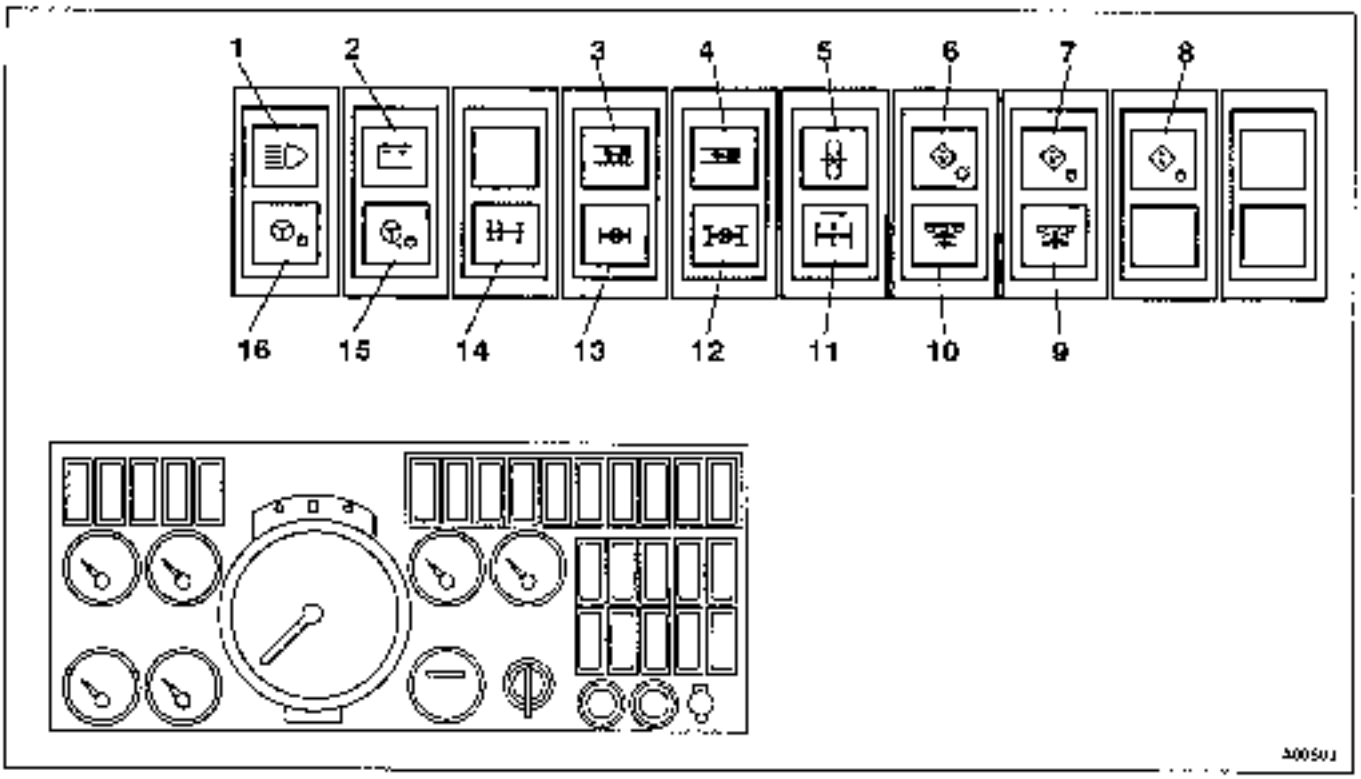

1 Indicator lamp "full beam"

2 Charge indicator lamp

3 Indicator lamp "off-the-road gear, transfer case"

4 Indicator lamp "on-the-road gear, transfer case"

5 Indicator lamp "converter override coupling"

6 Warning light "converter oil filter"

7 Warning light "oil filter 1, carrier's hydraulic system"

8 Warning light "oil filter 2, carrier's hydraulic system"

9 Indicator lamp "suspension locking system" 2nd to 5th axle lines

10 Indicator lamp "suspension locking system" 1st axle line

11 Indicator lamp "activation of drive" 3rd axle line

12 Indicator lamp "longitudinal differential lock, transfer drive axle, fourth axle line" (optional equipment with 10x8 drive)

13 Indicator lamp "transverse differential locks on all driven axle lines"

14 Indicator lamp "longitudinal differential lock, transfer case"

15 Warning light "steering circuit II"

16 Warning light "steering circuit I"

https://www.besttruckmanuals.com/

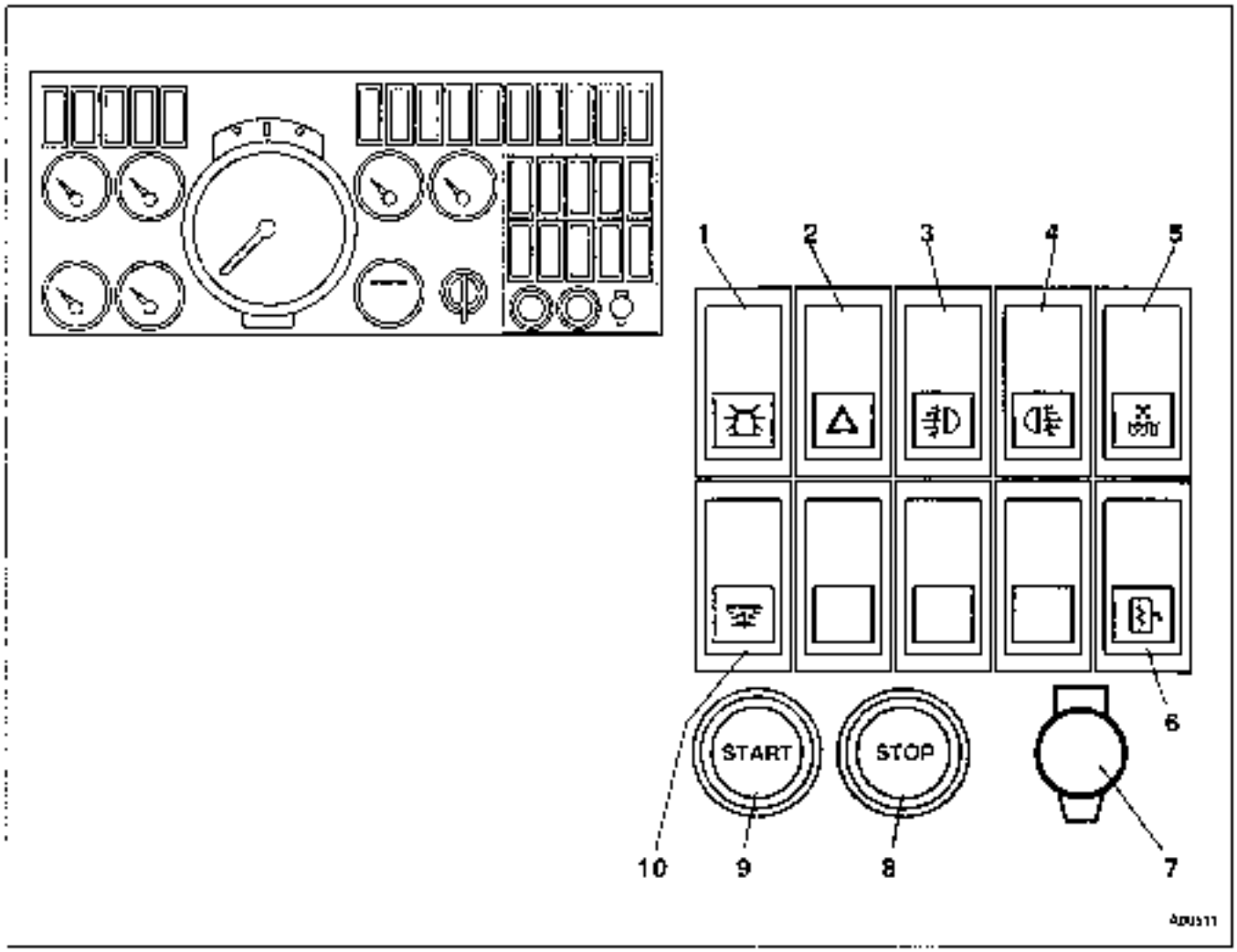

1 Rocker switch "rotating warning lights and indicator lamp"

2 Rocker switch "hazard warning lights" and indicator lamp

3 Rocker switch "fog lamps" with indicator lamp (optional equipment)

4 Rocker switch "rear fog lamp" with indicator lamp (optional equipment)

5 Rocker switch "additional heating system" (optional equipment)

6 Rocker switch "mirror heating system" and indicator lamp

7 24-V socket

8 Push button "stop engine, driving engine"

9 Push button "starter, driving engine"

10 Rocker switch "suspension locking system" 1st to 5th axle line and indicator lamp

https://www.besttruckmanuals.com/

3.2.2 Side instrument panel

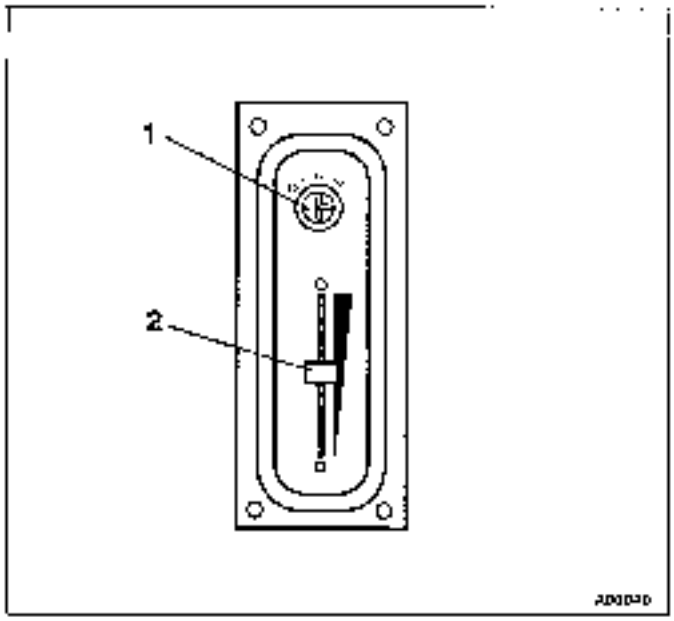

1 Knob "blower"

2 Heating regulator

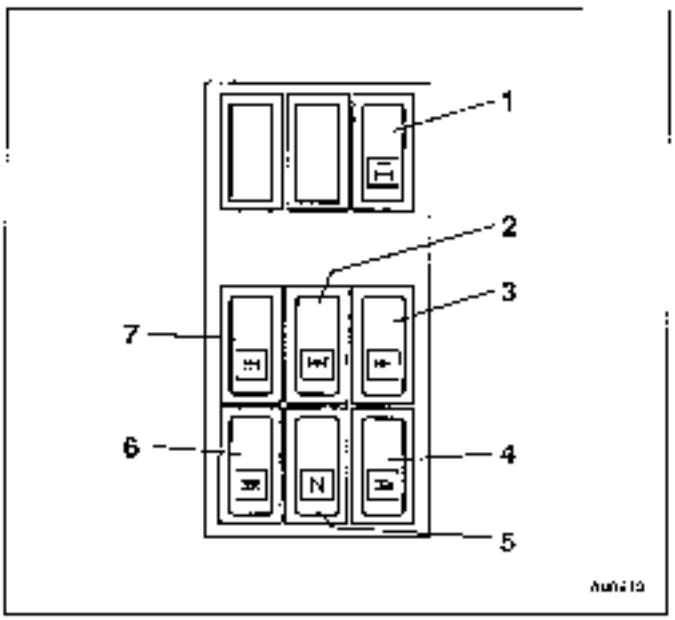

1 Rocker switch "activation of driving of the third axle line"

2 Rocker switch "longitudinal differential lock in transfer drive axle, fourth axle line" (optional equipment with 10 x 8 drive)

3 Rocker switch "transverse differential lock in all driven axle lines"

4 Rocker switch "transfer case, on-the-road gear"

5 Rocker switch "transfer case, neutral position"

6 Rocker switch "transfer case, off-the-road gear"

7 Rocker switch "longitudinal differential lock in transfer case"

https://www.besttruckmanuals.com/

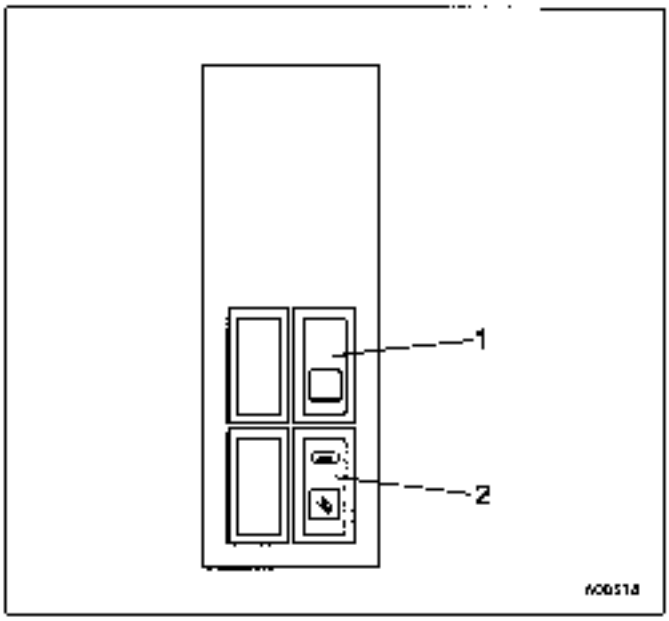

1 Diagnostic switch with indicator lamp for automatic gearbox

2 Rocker switch "driving mode selection **E** (road) or **P** (hill)" for automatic gearbox.

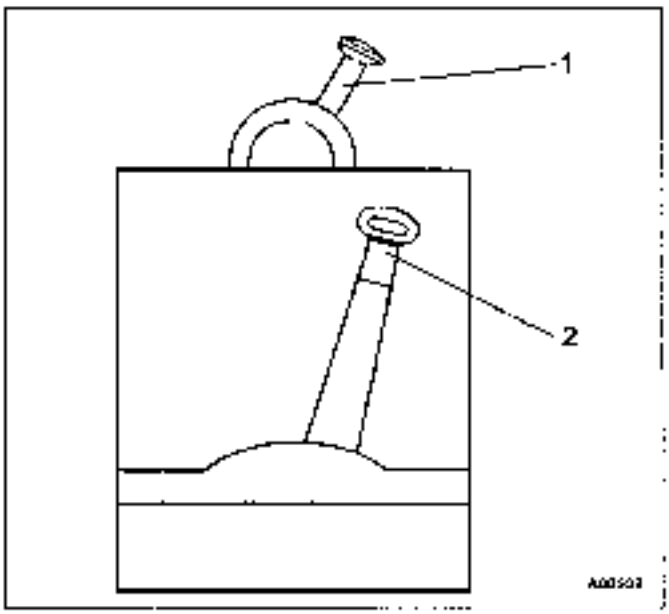

1 Parking brake (handbrake) lever

2 Gear lever

https://www.besttruckmanuals.com/

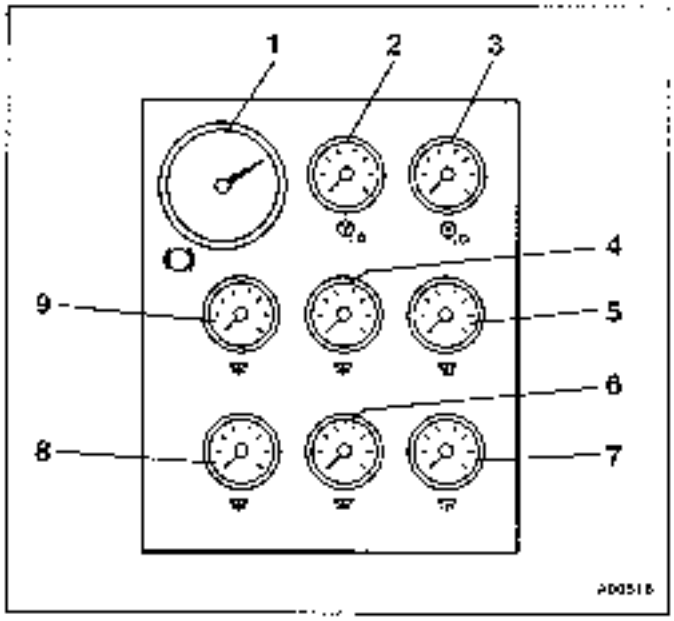

1 Pressure gauge "compressed air supply"

2 Oil pressure "steering circuit I"

3 Oil pressure "steering circuit II"

4 Operating pressure "suspension, right-hand side, 2nd and 3rd axle lines"

5 Operating pressure "suspension, right-hand side, 4th and 5th axle lines"

6 Operating pressure "suspension, left-hand side, 2nd and 3rd axle lines"

7 Operating pressure "suspension, left-hand side, 4th and 5th axle lines"

8 Operating pressure "suspension, left-hand side, 1st axle line"

9 Operating pressure "suspension, right-hand side, 1st axle line"

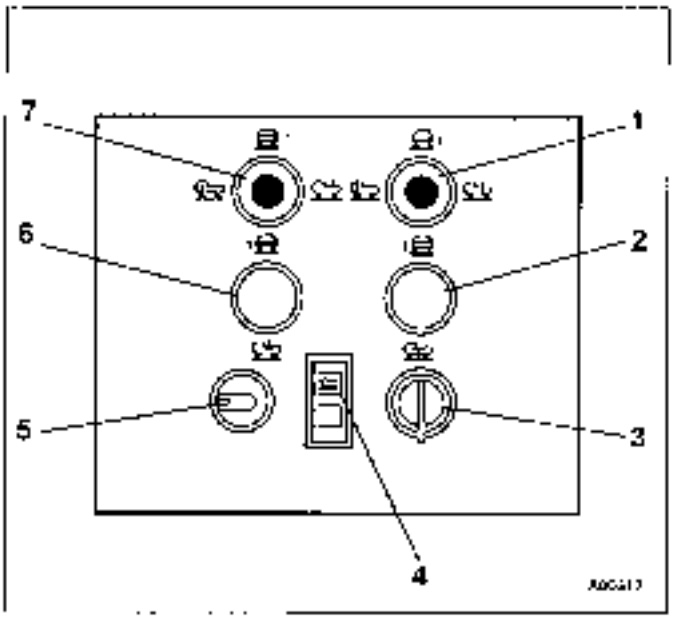

1 Joystick "level adjustment lower vehicle"

2 Push button "lower vehicle"

3 Key-operated switch

4 Warning light "carrier not at on the road level"

5 Knob "on-the-road level"

6 Push button "raise vehicle"

7 Joystick "level adjustment raise vehicle"

https://www.besttruckmanuals.com/

3.3 Heating the driver's cab

3.3.1 Heating the driver's cab

The driver's cab is heated by a heat exchanger with heat from the coolant of the driving engine

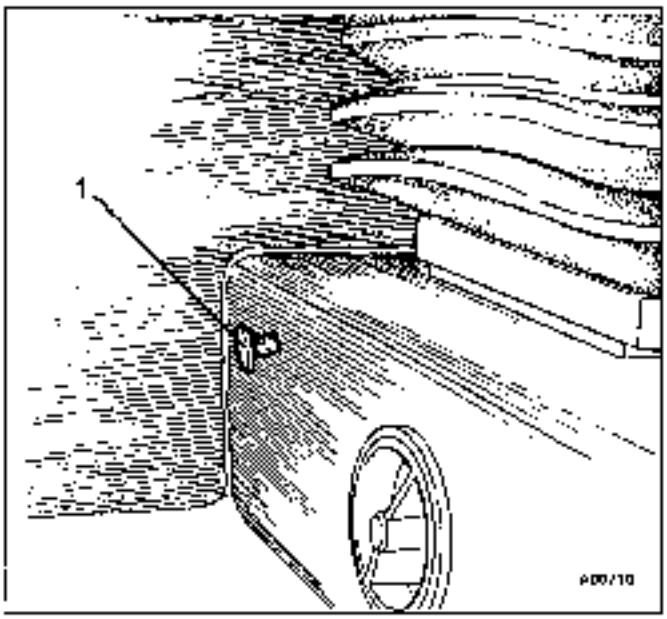

The heating can be set to fresh air or recirculated air.

The desired mode of operation is set with the Bowden control cable (**1**):

Knob not pulled out: fresh air

– Knob pulled out: recirculated air

– Intermediate positions possible

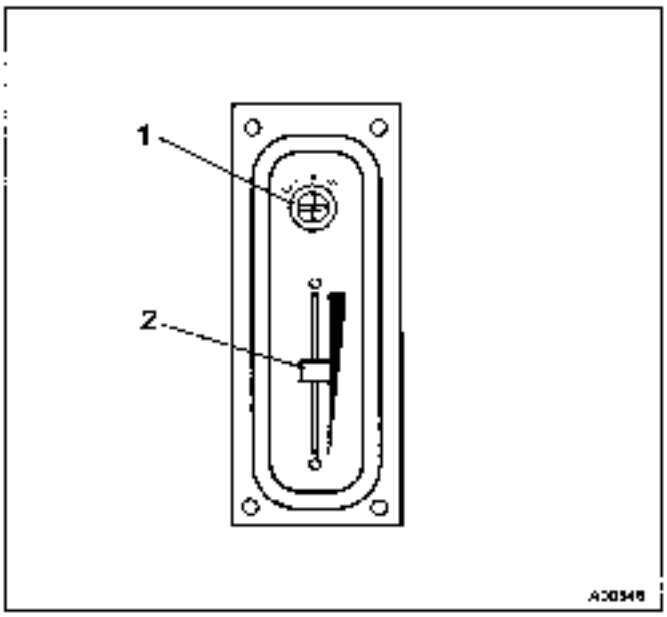

The required temperature is set with temperature regulator (**2**) and the blower is turned on with knob (**1**).

The blower positions are **0** (off), I, II and III (maximum setting).

https://www.besttruckmanuals.com/

3.3.2 Ventilating the driver's cab

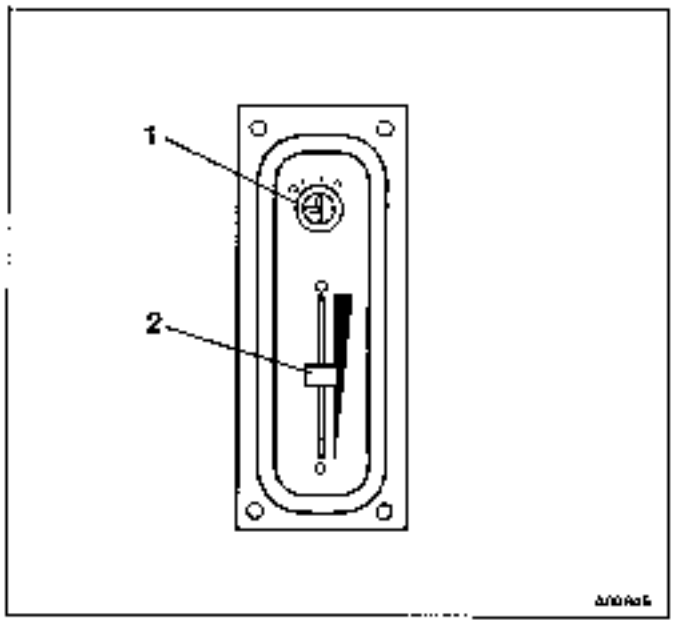

The temperature regulator (2) is pushed down to the cold position and the blower is switched on with knob (1).

Switch the heating to the fresh air position (please see Section 3.3.1 "Heating the driver's cab".

The driver's cab can also be ventilated with the sliding window in the cab door and the air vents above the windscreen.

3.3.3 Fresh air blower (optional equipment)

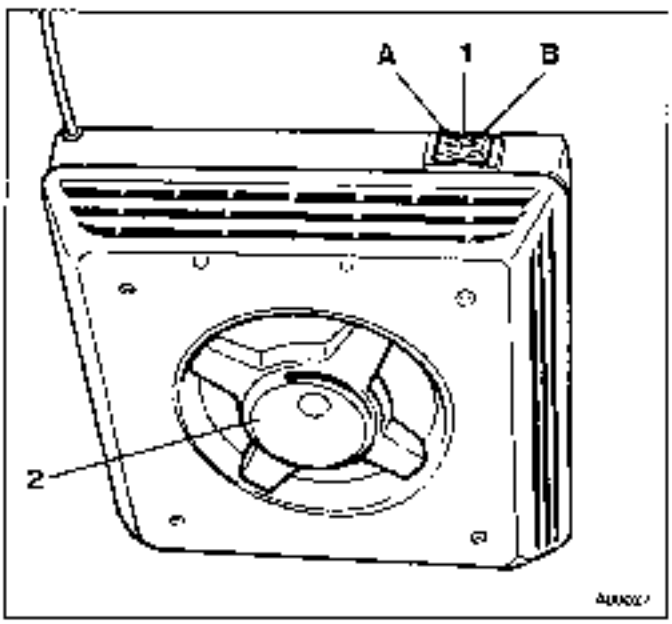

The blower for ventilating the cab is in the roof above the driver's seat. The direction of the air flow is selected with toggle switch (1), and the volume of air with handwheel (2).

A Air removed from the cab

B Air blown into the cab

https://www.besttruckmanuals.com/

3.3.4 Additional water heating system (optional equipment)

An additional water heating system which is independent of the engine warms up the coolant for the driving engine. Heat is produced by combusting fuel from the tank of the carrier engine. The heating system runs on the carrier's electrical system. The additional heating system can be used while the engine is running or is switched off.

If the temperature regulator is moved to "warm" and the blower is switched on as described in Section 3.3.1 "Heating the driver's cab" the cab is simultaneously heated.

Caution: Using the additional heating system while the engine is not running runs down the batteries. The batteries then have to be recharged more frequently.
When the engine is running the additional heating system supplements the heating capacity of the engine if it is very cold outside and the coolant is not warmed up sufficiently.

When the engine reaches normal temperature the heater is switched off automatically while the heating pump continues to run.

Caution: When the heater has switched off automatically the additional heating system should also be switched off so that it does not start up again if the engine coolant cools down.

https://www.besttruckmanuals.com/

Switching on the additional heating system

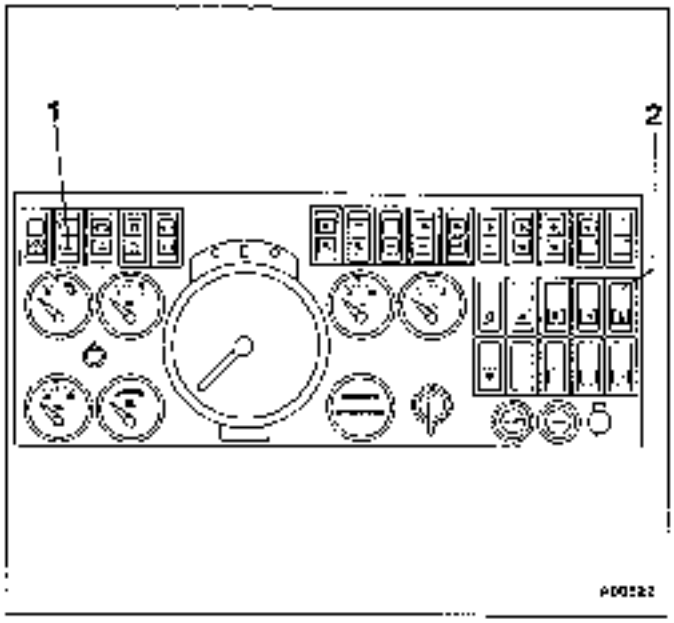

Press rocker switch (2) up. Indicator lamp (1) immediately lights up.

After preheating for approx. 15 seconds automatic ignition begins. If the heating is not on within 30 seconds the ignition process is stopped automatically. This is indicated by the indicator lamp going out.

For a second attempt to start the heater the rocker switch must be switched off and on again.

When the heating system has ignited, a thermostat in the heating unit takes over control of the heating. The indicator lamp indicates whether the heating system is switched on or off.

Note: If an interruption of approx. 10 seconds occurs when the heating system is on, it switches off automatically and the indicator lamp goes out.

Switching off the additional heating system

To switch off the additional heating system turn off rocker switch (2). The electric heating system pump continues to run for a while (approx. 3 minutes) to cool down the heater. The indicator lamp does not go out until the pump switches off.

Note: If you switch off the battery master switch during the heater's cooling down phase the indicator lamp goes out, but the cooling phase is not interrupted.

Preheating the carrier engine

When the engine is cold it can be preheated with the additional heating system before it is started. The heating system pump circulates the coolant through the engine. The temperature regulator in the driver's cab should be in the cold position and the blower should be turned off.

https://www.besttruckmanuals.com/

3.4 Before setting off

3.4.1 Setting up the prescribed transport condition

A description of the prescribed transport condition was given in Section 3.1 "Prescribed transport condition for truck crane".

3.4.2 In winter

When the truck crane is used in winter particular note must be taken of the following points:

- Fuel and engine oil must comply with the specifications for the respective outside temperatures as listed in Mercedes Benz's operating instructions which are supplied with these operating Instructions.
- Sufficient antifreeze must be added to the engine coolant. 50% antifreeze is standard.
- If the outside temperature is below −15°C (5°F) the engine must be started with a starter spray (please see Section 3.4.19 "Starting the engine with starter spray").
- The driving engine of the truck crane can be preheated with the engine-independent additional (optional) water heating system (please see Section 3.3.4 "Additional water heating system").
- In temperatures below -15°C (5°F) the automatic gearbox must be allowed to warm up in neutral (N) for 10 to 15 minutes before the truck crane is driven.

3.4.3 Visual inspection of the entire crane

Do a round of the whole truck crane and check especially that there are no leaks (oil, fuel, water).

https://www.besttruckmanuals.com/

3.4.4 Checking the oil level in the driving engine

The prescribed oil specification and required oil fill are listed in Mercedes Benz's operating instructions supplied with these operating instructions

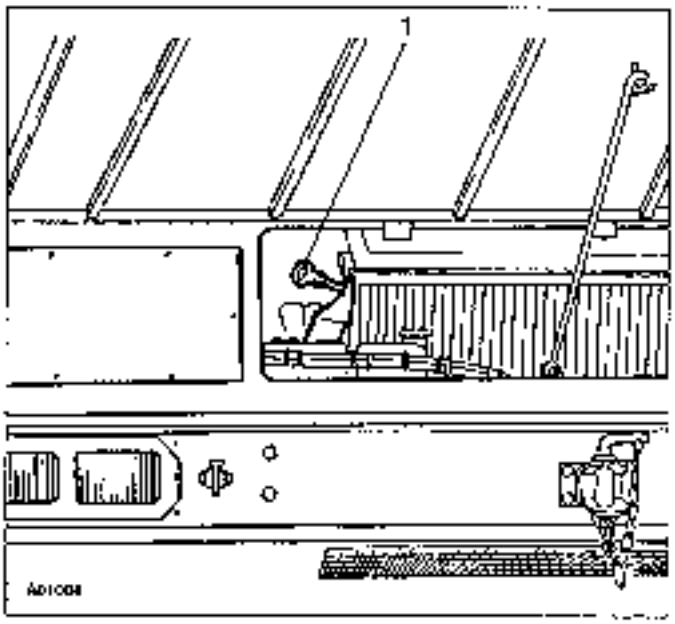

The dipstick (1) is behind the front grille

To check the oil unlock the grille (by turning the seven locking pins at the edge of the grille to the left) and fold the grille upwards.

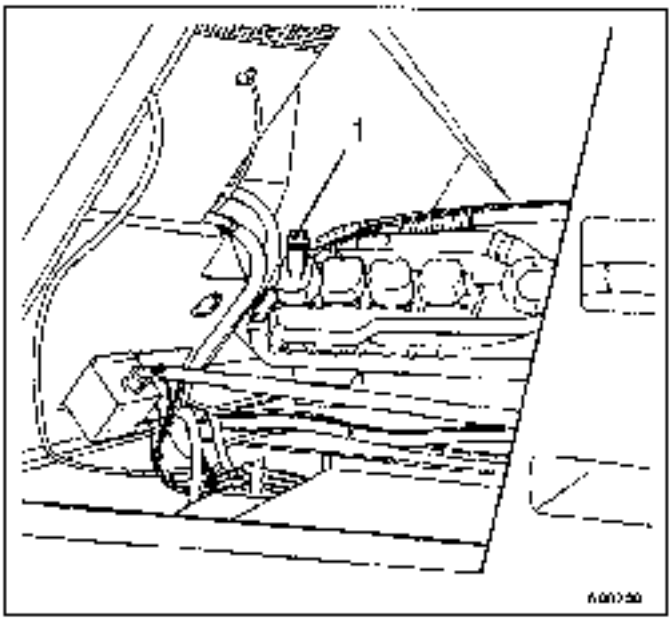

The oil filler neck (1) is at the top of the engine on the left-hand side.
To fill in oil the driver's cab must be tipped (please see Section 6.3 'Tipping the driver's cab')

https://www.besttruckmanuals.com/

3.4.5 Checking the oil level in the automatic gearbox

The prescribed oil specification and required oil fill are listed in Allison's operating instructions supplied with these operating instructions.

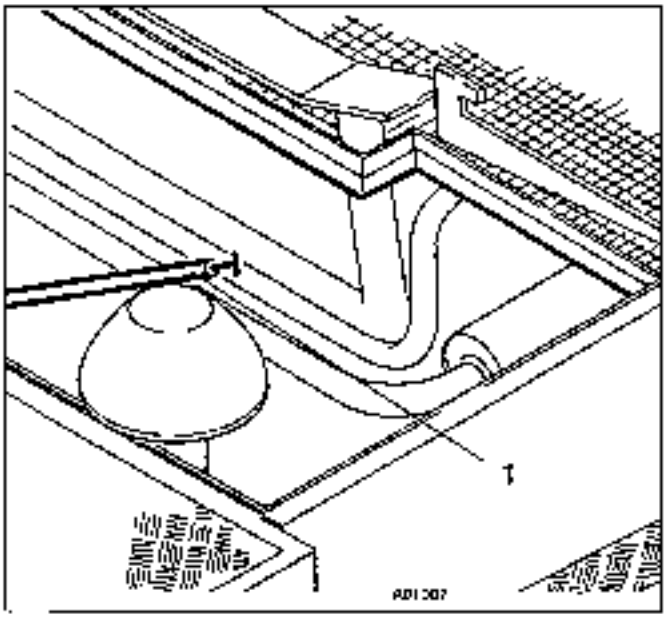

The dipstick (1) is on the left-hand side of the carrier in the raised area behind the driver's cab. Remove the cover from the raised area on the left of the boom support. Oil is topped up through the dipstick holder.

3.4.6 Checking the tyres

Check the condition of the tyres and the air pressure while the tyres are cold. If the air pressure is higher because the tyres are hot after driving, do not release air

Tyres:	Air pressure (bar)	Air pressure (psi)
14.00 R 25 (optional equipment)	10,0	145.0
16.00 R 25	9.0	130.5
20.5 R 25 (optional equipment)	7.0	101.5

https://www.besttruckmanuals.com/

3.4.7 Checking the windscreen washing system reservoir

Ensure that the reservoir is always filled and add a cleaning agent and antifreeze to the water.

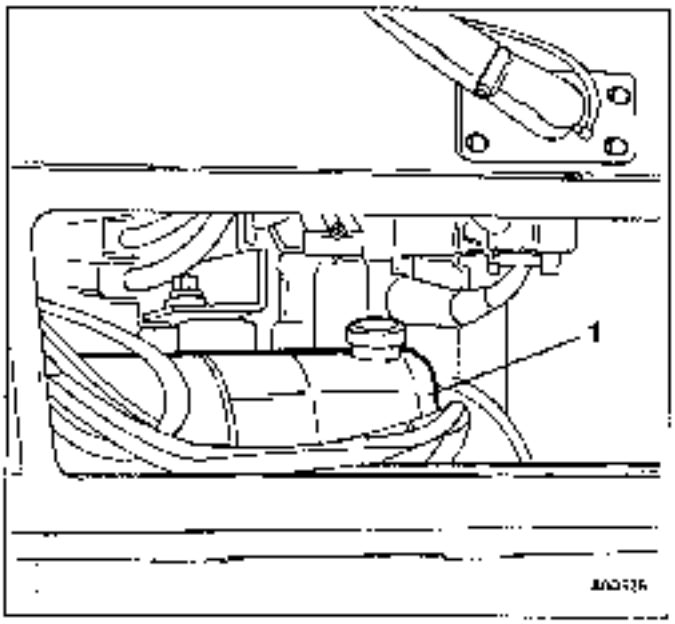

The reservoir (1) for the windscreen washing system is behind the front grille.

Unlock the front grille (by turning the seven locking pins at the edge of the front grille to the left) and fold the grill upwards.

3.4.8 Switching on the battery master switch

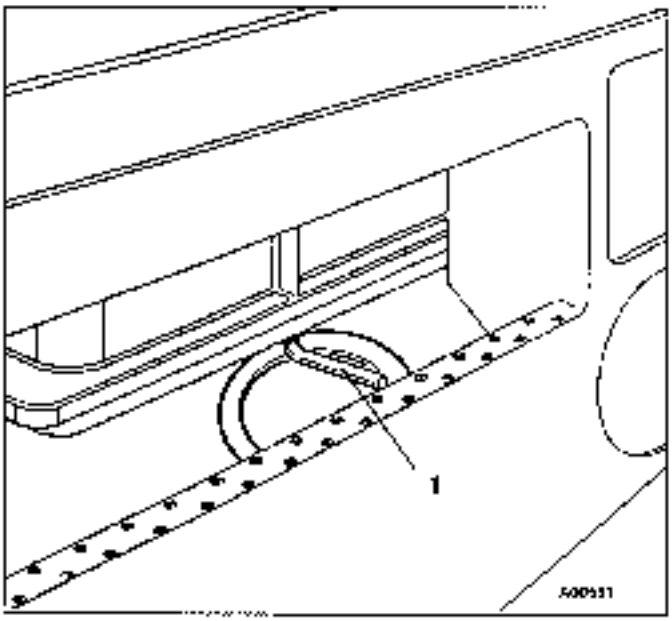

The battery master switch (1) is under the battery box.
Access to the master switch is through an opening in the base plate under the right-hand side of the driver's cab.

https://www.besttruckmanuals.com/

3.4.9 Engaging the free movement position for the slewing gear (only when driving on roads with the boom placed on a trailer)

If the boom is placed on a trailer for driving on roads the superstructure must be able to turn freely for turning corners. To release the permanent gear for the slewing gear the free movement position has to be engaged.

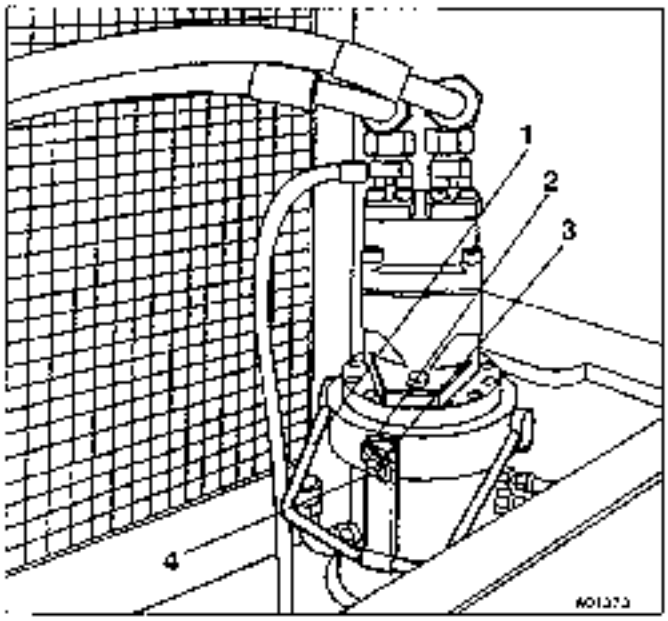

- Remove the linch pin (4) from the locking pin (3).
- Remove the plate (2) from the locking pin.
- Fold the stirrup (1) upwards.

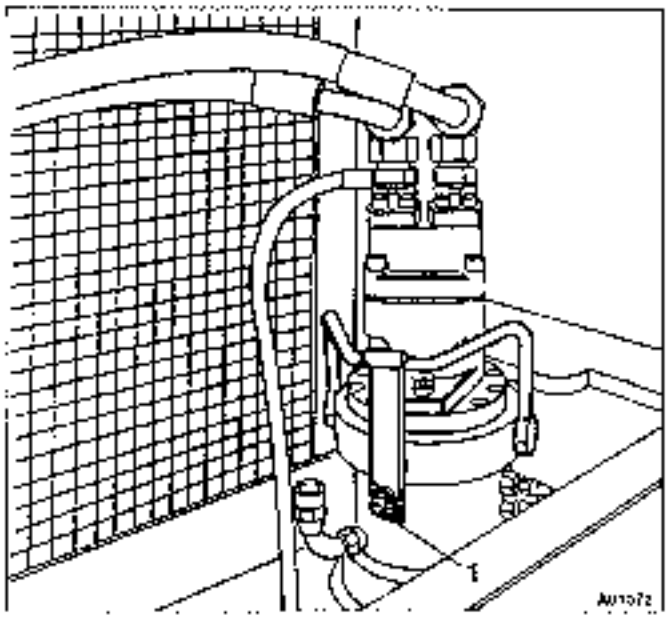

- Put the plate back on the locking pin.
- Secure the locking pin with the linch pin (1).

Danger: The stirrup must be secured with the linch pin when it is folded upwards otherwise the stirrup may drop and engage the slewing gear's permanent brake if the crane is driven over bumps in the ground and accidents will occur.

https://www.besttruckmanuals.com/

3.4.10 Engaging the free movement position for the boom (only for driving on roads with the boom placed on a trailer)

If the boom is placed on a trailer for driving on roads the trailer with the boom on it must be able to move up and down freely, e.g. for driving over the crest of a hill. So that the boom can "float" in this way the piston rod side of the derricking cylinder has to be connected hydraulically to the piston top side by switching over a valve.

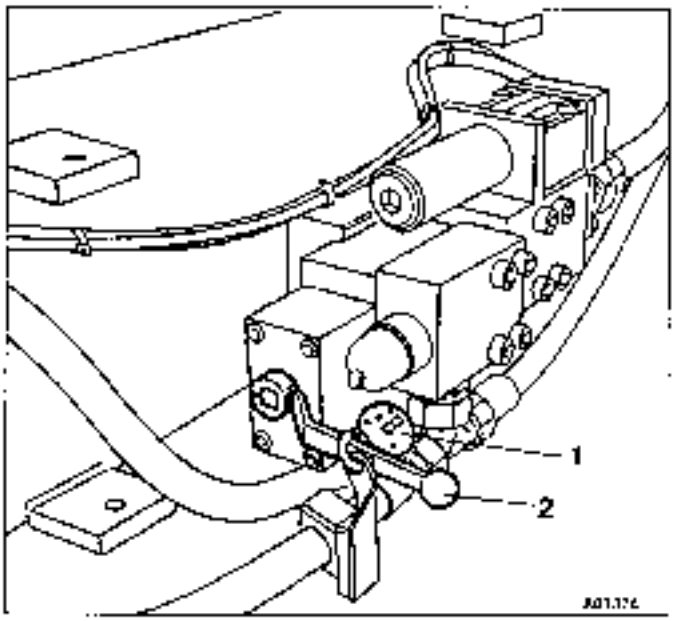

- Place the boom on the trailer.
- Remove the lock on the lever (padlock 1) on the change-over valve (2).

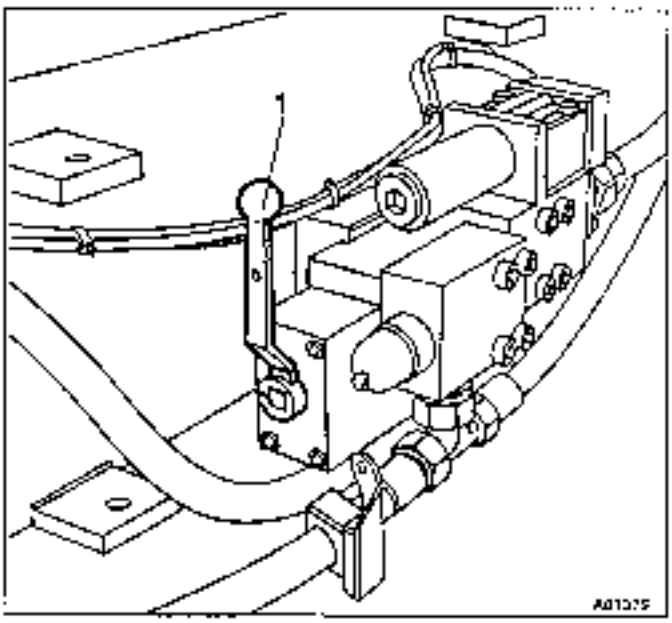

- Turn the manual lever (1) so that it is pointing upwards vertically.

Danger: The change over valve may only be changed over when the boom is lying on the trailer, otherwise the boom will drop and **accidents will occur.**

https://www.besttruckmanuals.com/

3.4.11 Adjusting the driver's seat, steering column and mirrors

Adjust the hydraulic suspension of the driver's seat to suit your height and weight. The height of the seat, the angle of both seat and back rest, and the stiffness of the suspension are all adjustable.

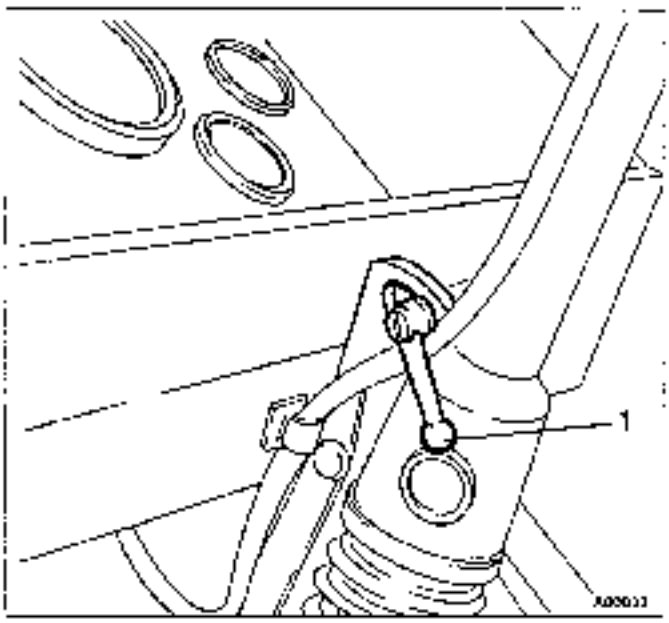

- You can adjust the angle and height of the steering column by loosening the locking screw (**1**).

The crane has three wing mirrors. Adjust these for the new seat position.

3.4.12 Placing a 24-hour recording disk in the tachograph

Fill out the disk in accordance with the regulations and insert it into the tachograph.

https://www.besttruckmanuals.com/

3.4.13 Switching on the ignition

Push the ignition key (8) into the combined lighting and ignition switch as far as it will go and turn it to position "**1**".

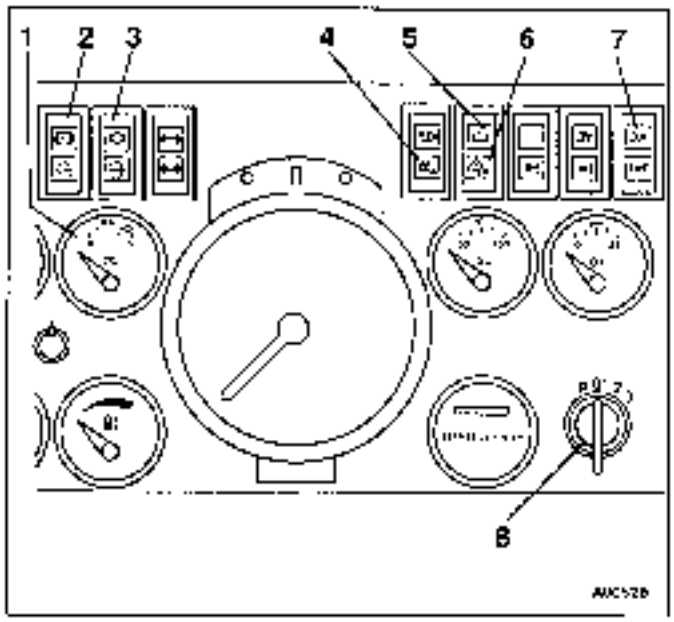

The following indicator lamps must be on:

- Engine oil pressure (**1**), charge indicator lamp (**5**), parking brake (**2**), steering circuits I (**4**) and II (**6**).
- If the pressure in the brake circuits has dropped below approx. 5 bar (72.5 psi), indicator lamp (**3**) is also on.
- The indicator lamp "on-the-road gear, transfer case" (**7**) must be on for driving on roads.

3.4.14 Changing the transfer case to the on-the-road gear

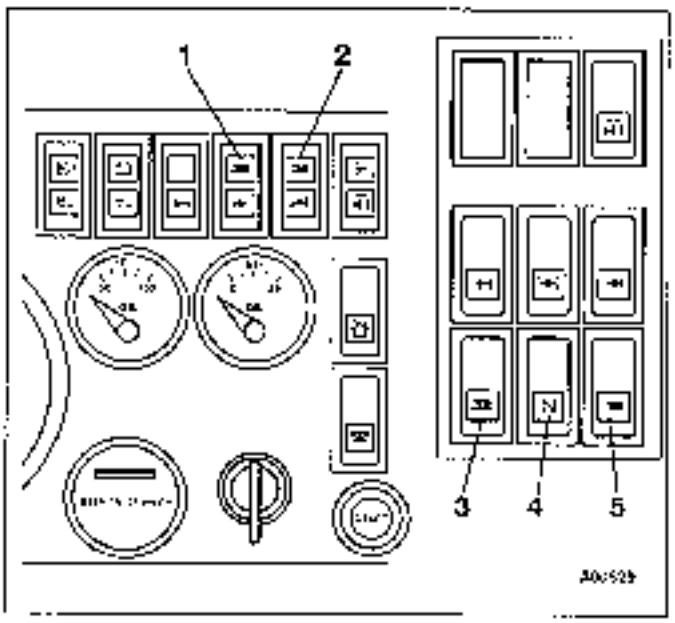

When the on-the-road gear is engaged indicator lamp (**2**) is on.

When the off the road gear is engaged indicator lamp (**1**) is on. When the transfer case is in the neutral position neither of the two indicator lamps are on.

- Check whether indicator lamp (**1**) is on. If not, first turn rocker switches (**3**) and (**4**) off. Then engage the on-the-road gear by pressing rocker switch (**5**).

Caution:

The transfer case should only be changed over to the new position when the vehicle is stationary.
Never turn on two of the three rocker switches (**3**), (**4**) and (**5**) at once otherwise the transfer case will not function properly.
Only one gear is permitted to be engaged at a time!

https://www.besttruckmanuals.com/

3.4.15 Checking the suspension system

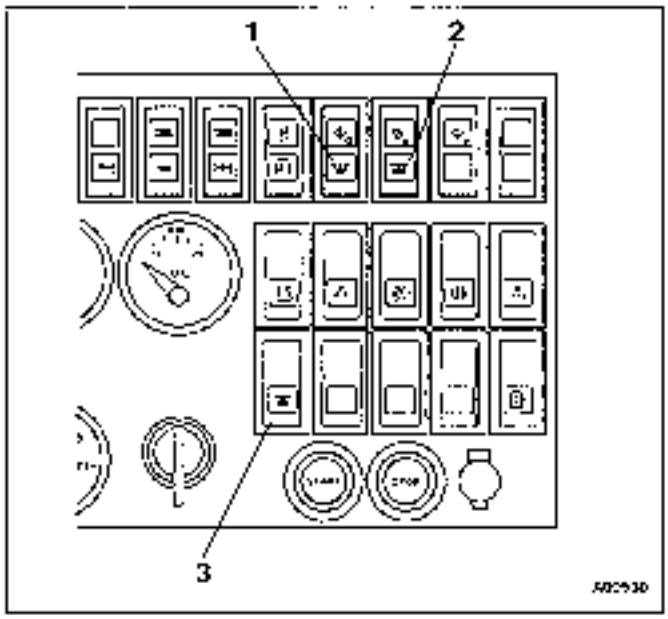

Indicator lamps (**1**) and (**2**) are on when the suspension system is locked.

Rocker switch (**3**) must be switched off.

Caution: The suspension system must not be locked on any of the axle lines when driving on roads.

https://www.besttruckmanuals.com/

3.4.16 Checking that the level of the carrier is correct for on-the-road travel

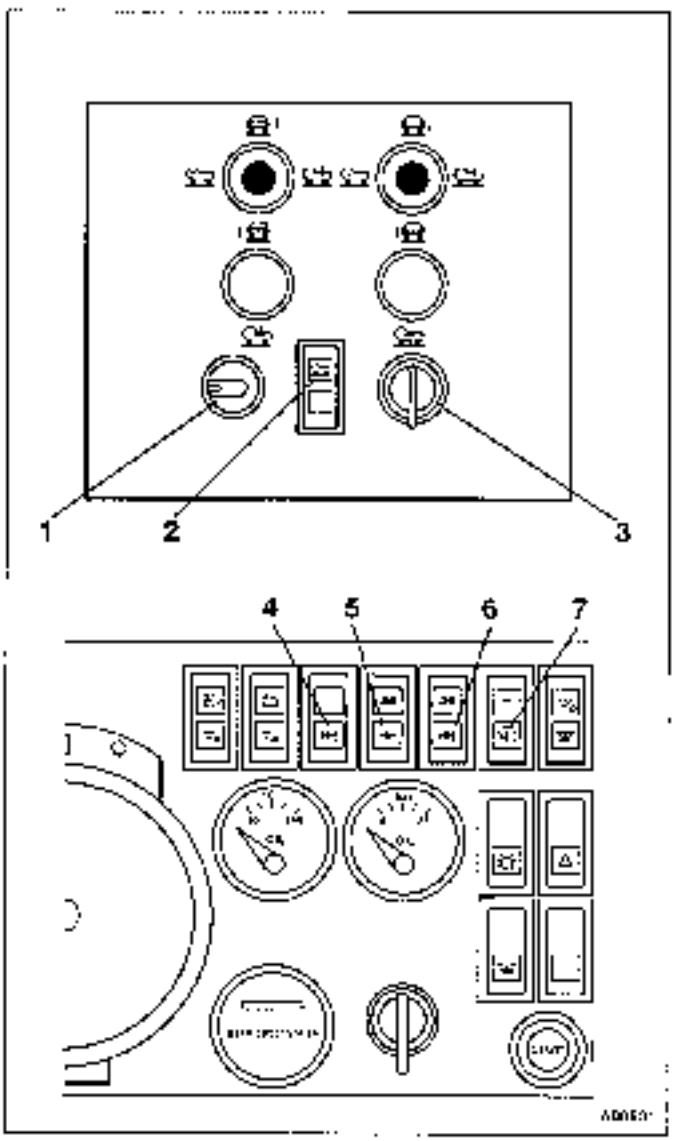

- Insert the key into key-operated switch (3). Turn the key to the right, press it in and turn it back to the left.

- To check the level of the vehicle turn the knob (1) to the left or right as far as it will go. Warning light (2) "carrier not at correct level for driving on roads" must not be on when knob (1) is turned.

  If the warning light is on, you must switch the level adjustment system to the "on-the-road" position. How to operate the level adjustment system is described in Section 3.7.6 "Carrier level adjustment system".

- Check indicator lamps (4) to (7). The differential locks and driving of the third axle line must be switched off. How to operate the differential locks is described in section 3.7 "Driving off-the-road".

- When the check has been completed turn the key back to the off position and take it out of the switch.

3.4.17 Checking that the carrier's electrical system is functioning

Check that all lights and signals, including the hazard warning lights, windscreen wipers and windscreen washing system are working.

https://www.besttruckmanuals.com/

3.4.18 Starting the driving engine

Mercedes Benz's operating instructions supplied with these operating instructions apply with regard to the driving engine.

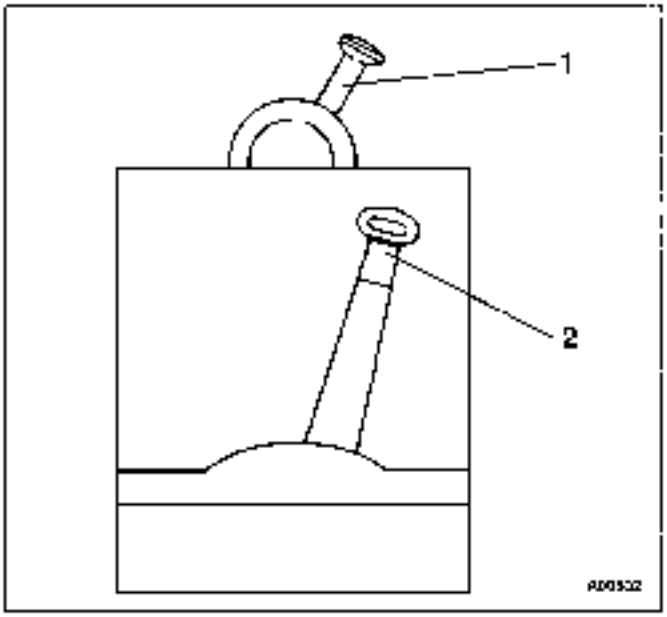

When the parking brake (1) is on, the lever is pointing to the back of the crane.
To put on the parking brake pull the grip of the lever out as far as it will go and turn the lever so that it is pointing to the back of the crane as far as it will go. Make sure that the lever is properly engaged in this position.

Move the gear lever (2) to neutral "N". The engine can only be started in this gear.

In very cold weather you can help the engine to start by preheating the cooling water with the additional (optional) water heating system.

How to operate the additional heating system is described in Section 3.3.4 'Additional water heating system'.

Starting the engine from cold

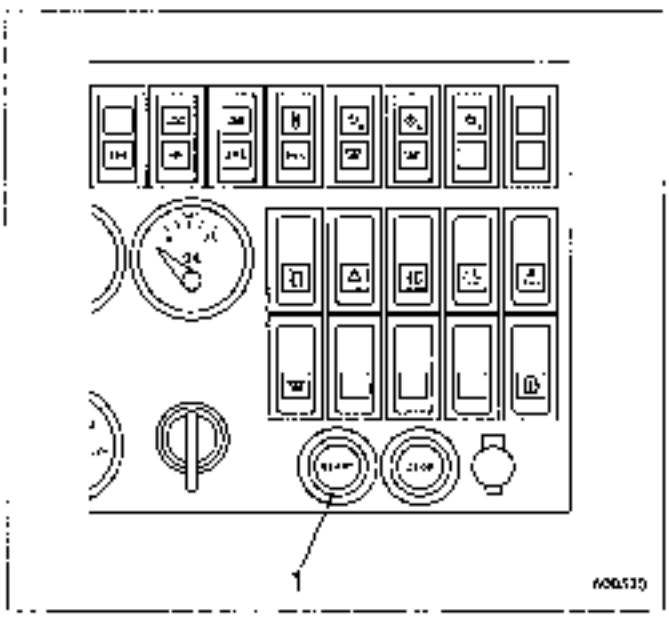

- Press the accelerator approx. 1/4 of the way.
- Press the starter button (1) as far as it will go.
- Release the accelerator when the engine has started.
- If the engine has not started after 15 seconds, stop the starting procedure and wait one minute before trying to start it again.

https://www.besttruckmanuals.com/

Starting the engine when it is warm

- Do not press the accelerator
- Press the starter button as far as it will go

3.4.19 Starting the engine with starter spray (optional equipment)

In temperatures below –15°C (5°F) when the engine is cold it must be started with starter spray.

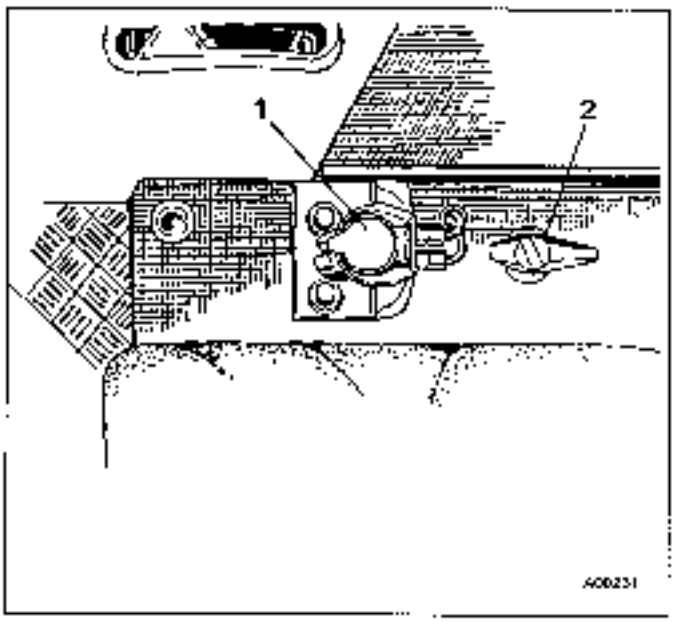

- Open the lid of the reservoir (1) and press the filler valve of an original bottle "F" onto the filler valve on the reservoir.
- Fill the reservoir with starter fuel up to the maximum mark and close the lid.
- Replace the cap on the starter fuel bottle immediately.
- Start the engine as described in Section 3.4.18 and operate the starter spray pump (2) (1 to 2 strokes per sec.) while doing so.

Caution:

The starter fuel is highly flammable and must not be subjected to temperatures of over 50°C (122°F) for long periods. Store the bottles in a cool place in warm weather.

If the outside temperature is below –15°C (5°F) the gearbox should be allowed to warm up after starting the engine by letting the engine run for about 15 minutes in neutral "N"

Danger:

The engine must never be started with starter spray when it (the engine) is warm or it may explode.

https://www.besttruckmanuals.com/

3.4.20 Driving engine is running - checking the instruments

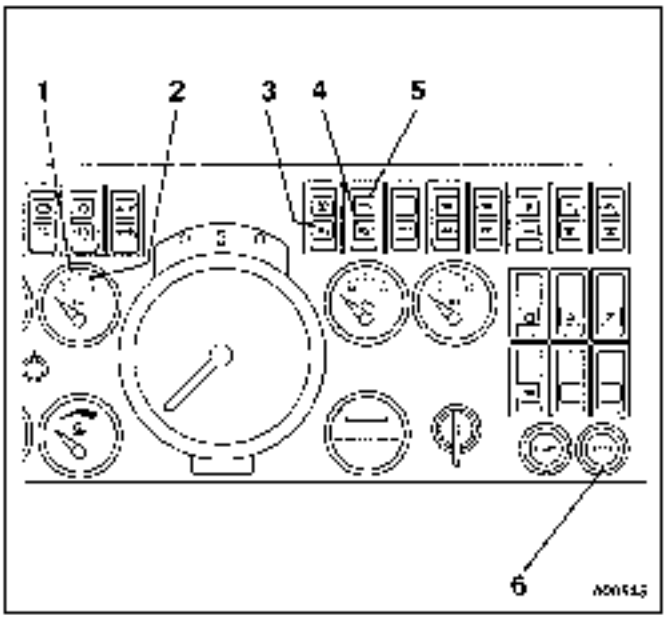

As soon as the engine has started check the oil pressure gauge (1).

Press the stop engine button (6) if the oil pressure does not go up and the indicator lamp (2) in the oil pressure gauge does not go out

Caution: The following indicator lamps must go out when the engine is running:

Engine oil pressure(2), battery charge indicator (5) and steering circuit I (3)

Note: Indicator lamp (4) for steering circuit II does not go out until the truck crane starts to move at a slow speed.

https://www.besttruckmanuals.com/

3.4.21 Checking the compressed air system and brake system

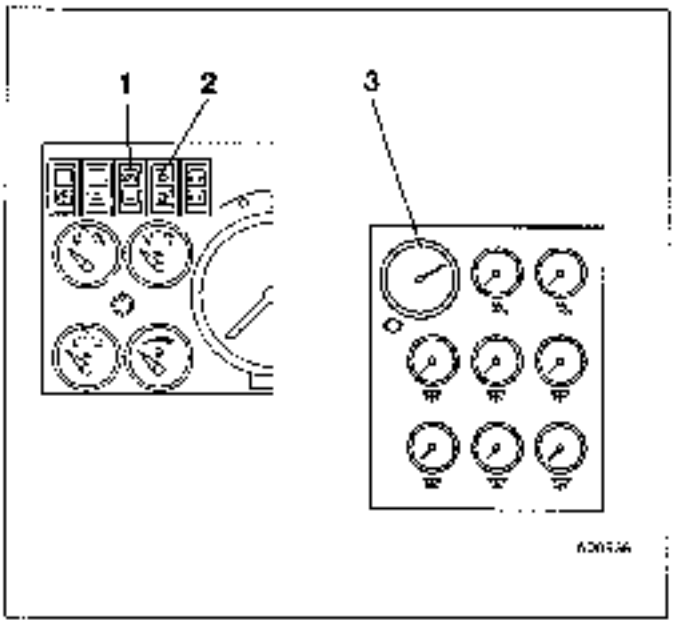

The indicator lamp (2) for pneumatic brake circuits I and II does not go out until a pressure of approx. 5.5 bar (79.7 psi) has built up in the reservoirs. (Pressure gauge (3) for compressed air supply).

Fill up the compressed air system in neutral gear until the cut-out pressure is reached.

You cannot start to drive until the air pressure in brake circuit III is sufficient to release the parking brake. The releasing pressure is approx. 5.4 bar (78.3 psi). When the parking brake has been released lamp (1) goes out.

Danger:

If the pressure is too low the parking brake will not be released, even if the parking brake lever is in the released position.

When the parking brake is released to check that it is functioning hold the crane with the service (foot) brake.

Only fill up the compressed air system when the parking brake is on.

https://www.besttruckmanuals.com/

3.4.22 Refuelling

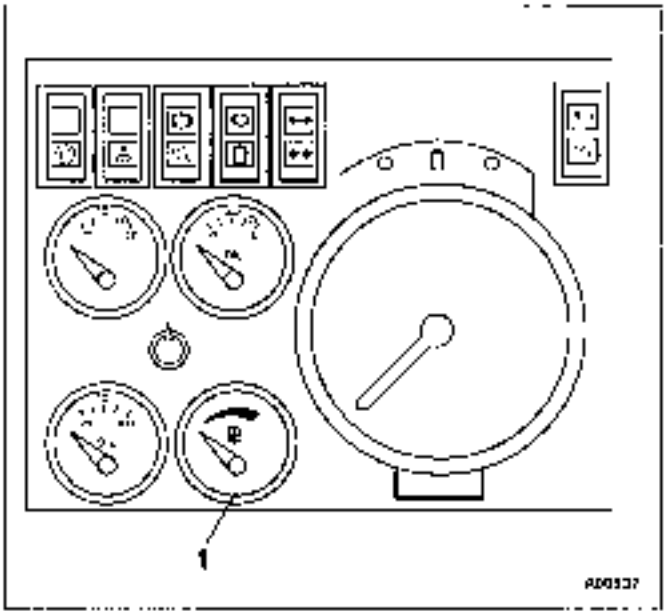

Check the fuel gauge (1) at regular intervals and refuel with diesel in good time.

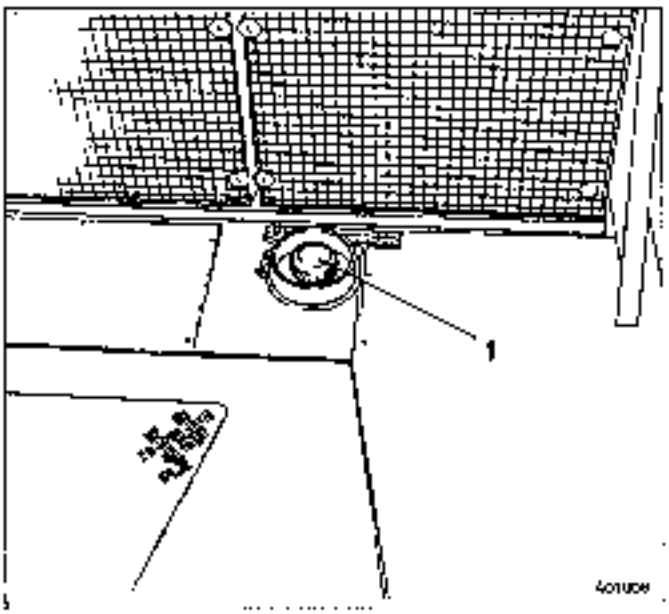

The filler neck for the driving engine's fuel tank (1) is in the middle of the carrier behind the boom support.

Note: The fuel tank for the crane engine must also be filled up (please see Section 4.3.17 "Refuelling"). When filling the tank always use a funnel with a filter.

Caution: The fuel specification for the driving engine is given in Mercedes Benz's operating instructions supplied with these operating instructions.

https://www.besttruckmanuals.com/

3.5 During the journey

3.5.1 Testing the brakes

As soon as you have started to drive, test both the service brake and parking brake

3.5.2 Gears of the automatic gearbox

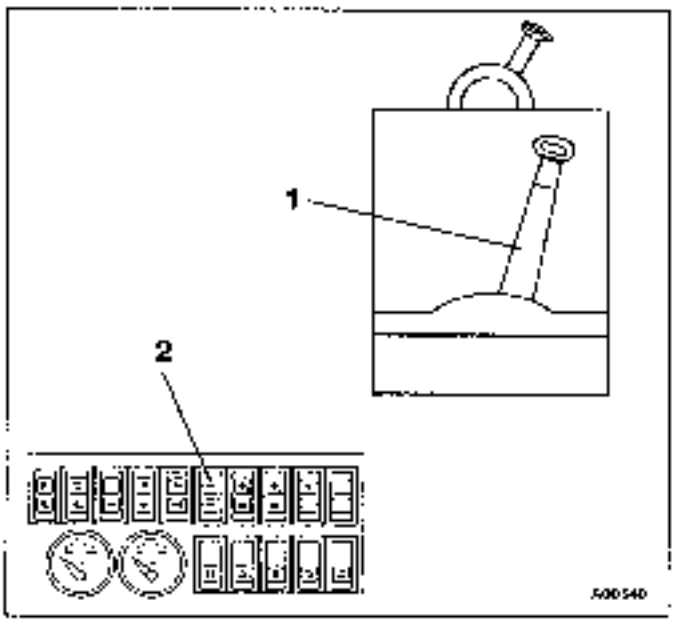

The different gear ranges of the automatic gearbox are selected with gear lever (1).

N = neutral

The engine can only be started in neutral (N). When in neutral the parking brake or service brakes must be on to prevent the crane from rolling

D = drive (normal automatic gear range)

In position **D** the gearbox automatically selects the suitable forward gear from second to fifth gear. The gearbox always starts in second gear and automatically changes up or down via the hydraulic torque converter. In all forward gears and all gear ranges the converter is cut out (overridden) when a sufficient number of revolutions and travelling speed have been reached so that power transmission from the engine to the gearbox is purely mechanical. When the converter is overridden indicator lamp (2) is on. The gearbox selects the appropriate gear and the right moment to change gear from the travelling speed, the position of the accelerator and the load condition.

4 = restricted automatic gear range

When the gear lever is in position 4 the gearbox starts in second gear and only changes up and down between second and fourth gear.

https://www.besttruckmanuals.com/

3 = restricted automatic gear range

When the gear lever is in position **3** the gearbox starts in second gear and only changes up and down between second and third gear. This gear should be used for driving downhill.

2 = restricted automatic gear range

When the gear lever is in position **2** the gearbox stays in second gear. This gear is suitable for driving in difficult terrain.

1 = restricted gear range

When the gear lever is in position **1** the gearbox stays in first gear. In this gear the engine's braking power can be fully utilized when driving downhill. Position **1** is also useful for manoeuvring and driving off-the-road or on slippery ground.

R = reverse gear 1

When the gear lever is in position **R** the vehicle reverses.

Caution: Only put the vehicle into reverse gear when it is stationary. Only change back from reverse into a forward gear when the vehicle is stationary.

https://www.besttruckmanuals.com/

3.5.3 Automatic gearbox - alternative modes

There is a choice of two modes:

In **mode "E"** (= Economy) the gearbox changes into the next higher gear at a lower engine speed. The number of revolutions, and thus also fuel consumption, is lower than in mode "P".

Select mode "E" when driving on level ground.

In **mode "P"** (= Power) the gearbox changes gear at higher engine speeds. This provides more acceleration and speed for driving uphill than mode "E".

Use mode "P" for driving uphill and off-the-road.

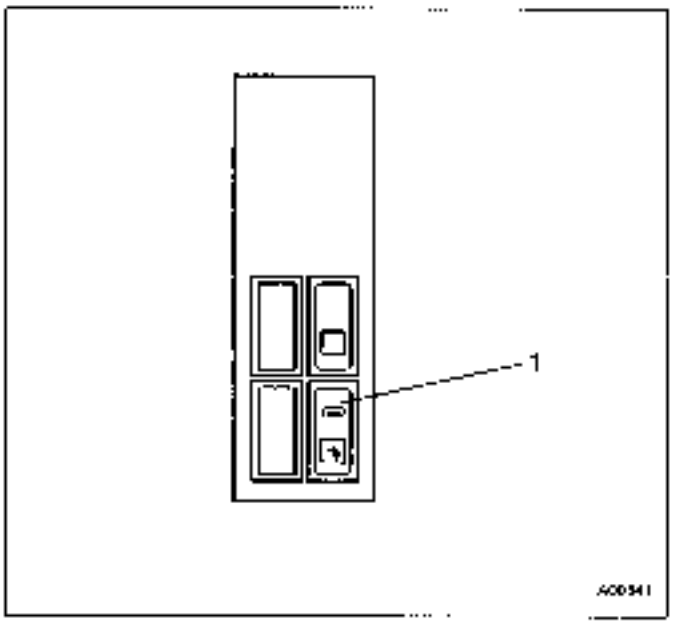

Rocker switch (1) pressed in at the top.
Mode "E" (road)

Rocker switch (1) pressed in at the bottom:
Mode "P" (hill)

To switch the rocker switch to another position the release button at the top of the switch has to be pressed at the same time.

Caution:

The mode may only be changed (from "E" to "P" or "P" to "E") when the truck crane is stationary and the gear lever is in the neutral position **N**.

https://www.besttruckmanuals.com/

3.5.4 Starting and stopping

When a gear range has been selected when the truck crane is stationary a safety circuit in the gearbox causes 1 to 2 seconds to elapse before the gearbox changes into the selected gear.

When the vehicle is stationary the gearbox only changes into the selected starting gear if the engine speed is below 900 min^{-1} and the accelerator is not pressed.

Danger: When starting the truck crane always prevent it from rolling with the service brake until the starting gear engages.

To start when the parking brake is on:

- release the accelerator (engine speed less than 900 min^{-1})
- select a gear range (e.g. **D**)
- press the service brake
- release the parking brake
- after approx. 2 seconds release the service brake and press the accelerator.

Caution: When the vehicle is stationary never move the gear lever and press the accelerator at the same time.

To stop:

- release the accelerator
- press the service brake

For a short stop with the engine still running you can leave the gear lever in the selected position.

Caution: If you release the service brake the vehicle will immediately start to roll.

https://www.besttruckmanuals.com/

For longer stops with the engine running you must:

- release the accelerator
- press the service brake
- put on the parking brake
- move the gear lever to the neutral position **N**

Note: The engine can only be started in neutral. If one of the two gear ranges is engaged the starting lock will not be released.

3.5.5 Changing gear manually

When driving under load you can change gear manually. It is not necessary, however, to change gear manually during normal on-the-road travel.

By changing into a lower gear you can prevent the gearbox from changing into a higher gear when this is not desirable and thus losing power or braking power, e.g. when travelling uphill or downhill.

You cannot, however, change gear directly manually. The gear does not change until the travelling speed and the engine speed allow the gear to be changed.

https://www.besttruckmanuals.com/

3.5.6 Checking the controls and instruments while driving

Please check the following indicators and warning instruments while you are driving:

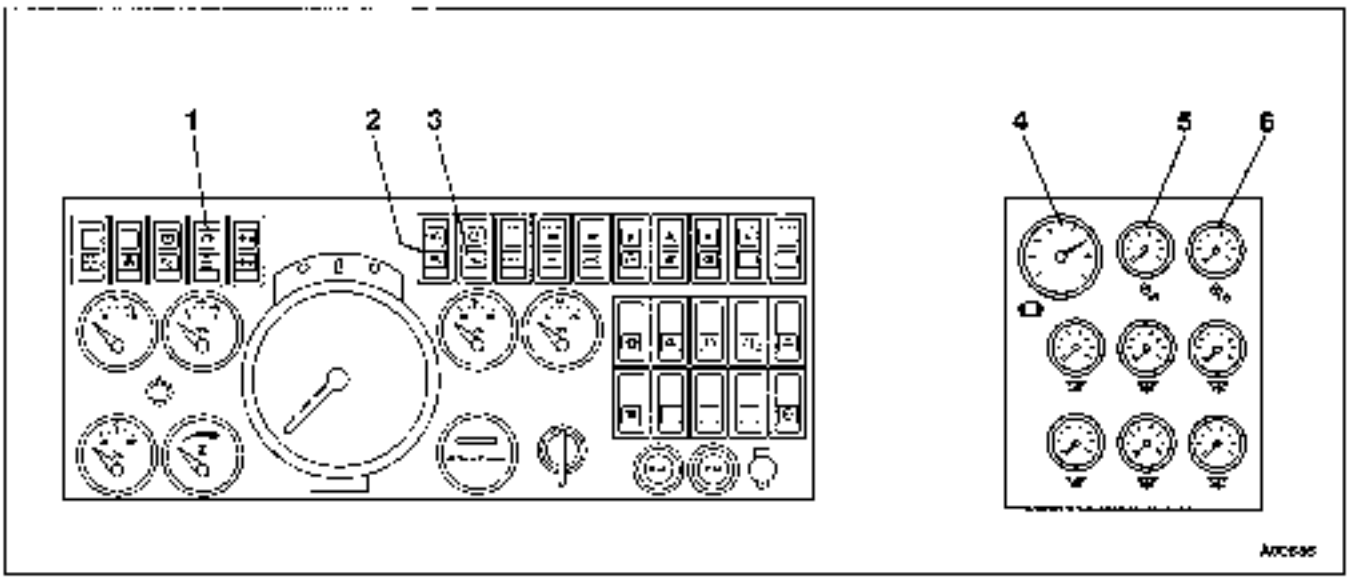

Compressed air gauge and indicator lamp for pneumatic brake circuits

If the pressure in a brake circuit drops below approx. 5.5 bar (79.7 psi) (pressure gauge (**4**)) for compressed air supply), warning light (1) lights up.

Caution: If the warning light is on, stop the vehicle immediately and find out why. You may only drive slowly as far as the next workshop

Danger: If the pressure in both brake circuits drops below 5.5 bar (79.7 psi), stop the vehicle immediately. The vehicle can then only be braked with the parking brake (handbrake)

Warning lights for steering circuits I and II

Warning lights (**2**) and (**3**) indicate that the pressure has dropped in the respective steering circuit (pressure gauges (**5**) and (**6**).

Caution: If one warning light is on, stop the vehicle at the next suitable opportunity and find out why. If only one steering circuit has failed the vehicle may be driven slowly as far as the next workshop.

Danger: If both warning lights are on, stop the vehicle immediately
If both steering circuits have failed the journey must not be continued under any circumstances as the vehicle can no longer be steered safely as a result of the high steering forces.

https://www.besttruckmanuals.com/

Coolant temperature gauge with warning light

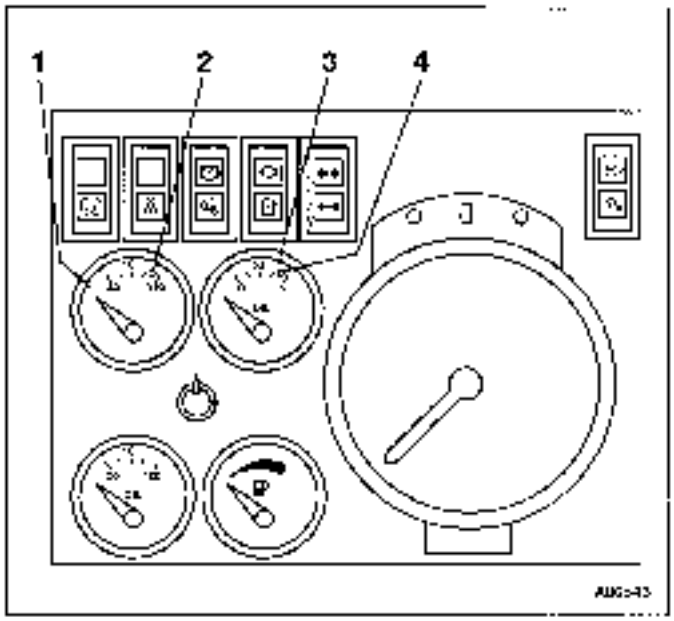

The temperature of the coolant (1) may only increase to 120°C (248°F) on uphill stretches in very warm weather. The warning light (2) on the coolant temperature gauge lights up when the temperature reaches 105°C (221°F)

Note: If the warning light lights up, reduce the load on the engine. Change into a lower gear and continue the journey at a higher engine speed. Check that the fan is working.

Caution: Stop immediately if the temperature of the coolant rises above 120°C (248°F). To cool down the engine let it run at a higher idling speed. If the temperature does not drop turn off the engine and find out why.

Engine oil pressure gauge with warning light

The engine oil pressure (3) must not drop during travel. In neutral the oil pressure must be at least 0.6 bar (8.7 psi). The oil pressure must increase immediately on accelerating. The warning light (4) on the engine oil pressure gauge lights up if the oil pressure drops below 0.4 bar (5.8 psi).

Caution: If the oil pressure drops below 0.4 bar (5.8 psi) stop the vehicle immediately, turn off the engine and find out why. Do not run the engine on any account until you have found the cause and rectified the fault.

https://www.besttruckmanuals.com/

Gear oil temperature gauge

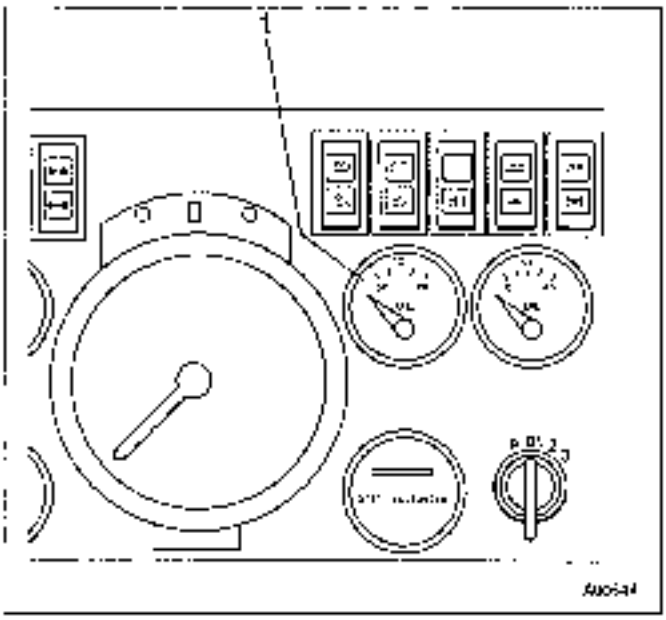

The temperature of the gear oil (1) must not exceed 110°C (230°F) when driving on roads while the torque converter is overridden. While the torque converter is engaged the temperature is permitted to increase to 135°C (275°F).

If the oil temperature rises above 110°C (230°F) or 135°C (275°F) the vehicle must be braked with the service brake until the gearbox changes into a gear in which the oil temperature remains below 110°C (230°F).

Note: When driving downhill using the retarder and driving uphill this temperature can be exceeded.
During long downhill stretches with the retarder on the oil temperature may only increase temporarily to 165°C (329°F). If it rises above 155°C (329°F) switch the retarder off and/or select a lower gear.

Caution: If the gear oil temperature does not drop below 165°C (329°F) after a certain time, stop the vehicle immediately!
Change into neutral (N) and allow the engine to run at high speed. If the temperature of the gear oil does not drop within a few seconds turn off the engine and find out why.

https://www.besttruckmanuals.com/

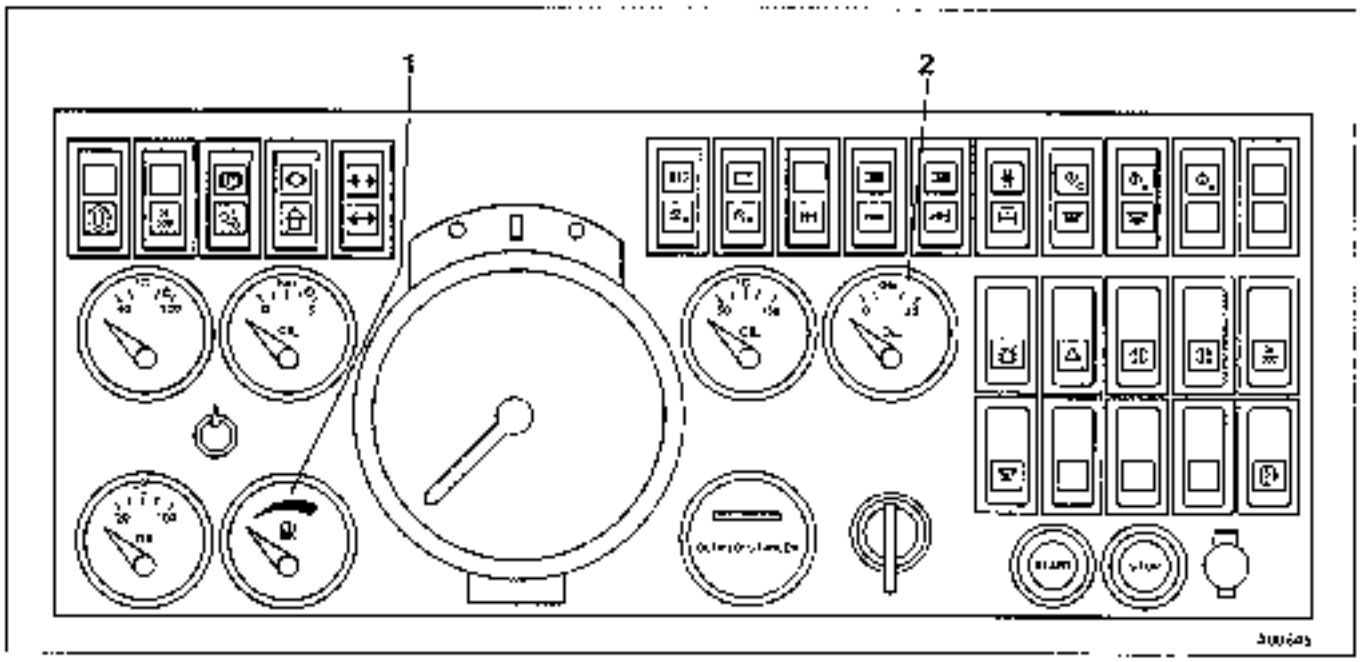

Gear oil pressure gauge

When driving at maximum speed in a forward gear the gear oil pressure (pressure gauge (2)) must be between 10 and 12 bar (145 to 174 psi). In neutral (N) a pressure of 15 to 20 bar (218 to 290 psi) must be reached.

When reversing the pressure must also be 20 bar

Caution: If the gear oil pressure drops below 10 bar (145 psi) while you are driving you may only drive under partial load to the nearest place where you can park.

Fuel gauge

Check the fuel gauge (1) at frequent intervals. Never run the fuel tank completely empty

Note: When the tank is nearly empty the fuel filters can become clogged with dirt. If air enters the fuel system it has to be bled.

https://www.besttruckmanuals.com/

3.5.7 Driving downhill

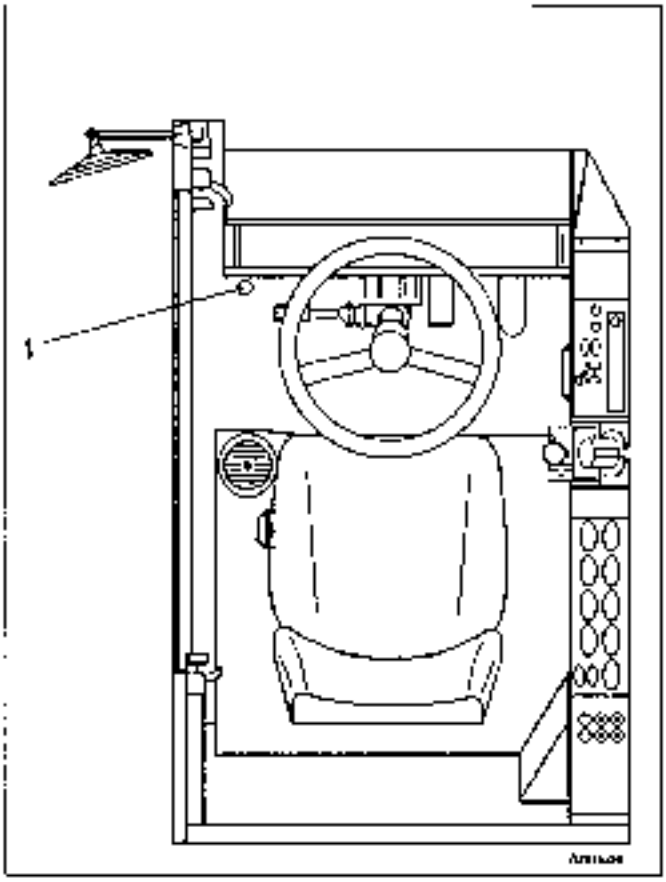

When driving downhill the retarder in the automatic gearbox can be used within any gear range.

To engage the retarder release the accelerator and press the retarder switch (1).

To increase the braking force you can change into a lower gear and select gear mode "P" (hill) (please see Section 3.5.3 "Automatic gearbox - alternative modes")

As long as the retarder is engaged the gearbox can not change into a higher gear.

Note: If you press the accelerator while the retarder switch is pressed the retarder will be switched off and the gearbox can change into a higher gear. When driving downhill you should therefore select a lower gear range to ensure that the gearbox does not change into a higher one when this is not desirable.

Caution: When driving downhill for long stretches with the retarder on pay particular attention to the gear oil temperature (please refer to Section 3.5.6 "Gear oil temperature gauge").

https://www.besttruckmanuals.com/

3.5.8 Driving uphill

On certain gradients the gearbox switches back and forth between two gears. Either release the accelerator a little or select a lower gear range.

For hill starts the engine may not have sufficient power in second gear (starting gear in gear range **D**) If you want to start in first gear and the higher gears are not to be blocked you must start in gear range 1 and change into a higher gear when the vehicle has started to move.

Note: For hill starts on steep gradients and for manoeuvring it may be better to operate the service brake with your left foot so that you can operate the brake and the accelerator at the same time for more precise control of the vehicle. For driving uphill change into gear mode **P** (hill).

Danger: When you release the parking brake always hold the vehicle with the service brake, particularly on uphill and downhill slopes, as when you release the parking brake it takes approx. 2 seconds for the gear to engage after the parking brake has been released. During this time the vehicle immediately starts to roll if the brakes are not on. Do not press the accelerator for any reason during these 2 seconds.

https://www.besttruckmanuals.com/

3.6 After each journey

3.6.1 Stopping the vehicle

Putting on the parking brake

Stop the vehicle with the service brake. When the vehicle is stationary put on the parking brake.

Changing into neutral

Move the gear lever to neutral **N**.

Turning off the engine

If the temperature of the coolant is very high, e.g. following long uphill stretches, let the engine continue to run for 1 to 2 minutes at a higher idling speed.

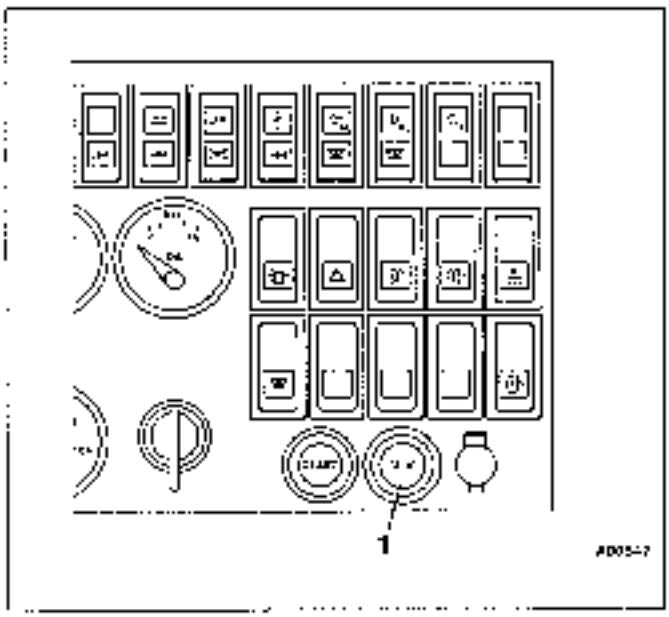

To stop the engine press push button (1) '**stop engine**'.

https://www.besttruckmanuals.com/

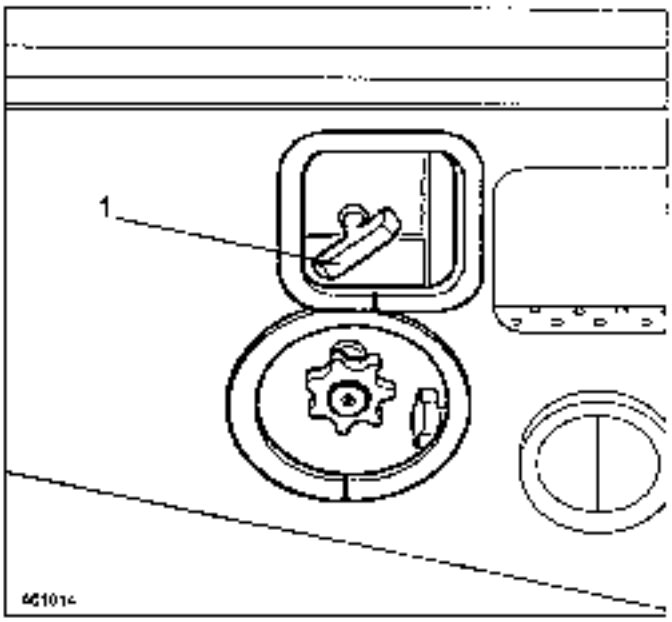

If the "stop engine" button on the instrument panel should fail you can turn off the engine by pulling the "stop engine cable" (1).
The grip of this cable is behind the steps under the left door of the driver's cab.

Turning off the ignition

Turn the ignition key to position "**O**". All indicator lamps must go out.

Remove the ignition key.

Securing the vehicle so that it cannot roll

On slopes the vehicle should be prevented from rolling by putting chocks under the wheels in addition to engaging the parking brake.

Danger: Truck crane KMK 5090 cannot be prevented from rolling by engaging a gear.

https://www.besttruckmanuals.com/

3.6.2 Switching off the battery master switch for long stops

For every stop lasting more than 8 hours switch off the battery master switch:

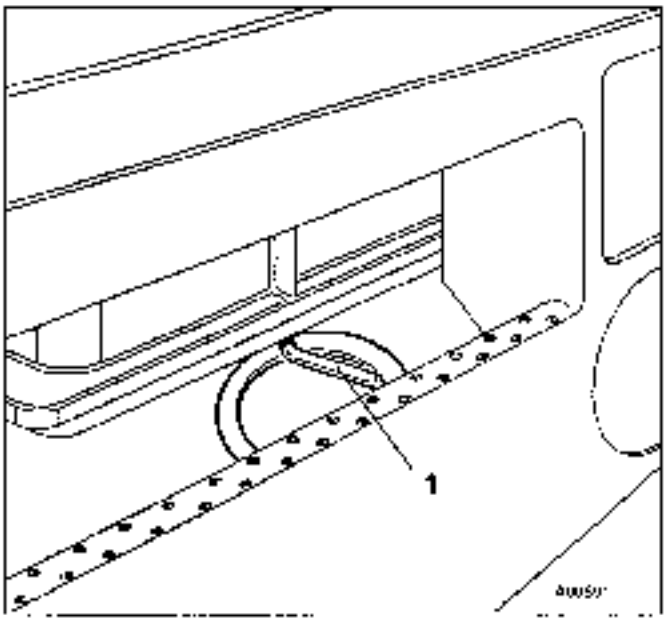

- switch off all current consumers
- turn off the engine
- remove the ignition key
- switch off the battery master switch (1).

The battery master switch is under the battery box and is reached through the upper step under the right-hand door of the driver's cab.

Note: The cooling down phase of the engine independent heating system is not interrupted when the battery master switch is turned off.

Caution: You must never switch the battery master switch off while the engine is running or interrupt the cable connection from the batteries to the alternator.

https://www.besttruckmanuals.com/

3.7 Driving off-the-road

When driving on poor surfaces select a low gear range.

3.7.1 Off the road gear

The off the-road gear reduces the driving speed in all gears and therefore increases the thrust of the driven wheels in any gear.
When the off-the-road gear is engaged additional pressure accumulators are activated in the suspension system. This increases the suspension range and improves the suspension.

Caution: Only engage and disengage the off the road gear while the vehicle is stationary and is in neutral **N**

Never press two of the three rocker switches (3), (4) and (5) at the same time or the transfer case will not function properly. Only one gear may be engaged at a time!

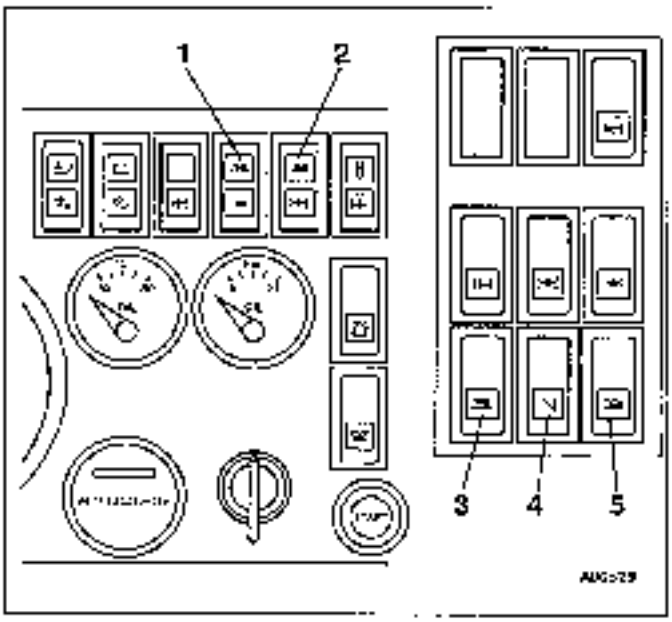

Engaging the off-the-road gear

- Stop the vehicle.
- Move the gear lever to neutral **N**.
- Turn rocker switch (5) for the on-the-road gear off. Indicator lamp (2) must go out when the on-the-road gear is disengaged
- Switch on the off-the-road gear with rocker switch (3). Indicator lamp (1) is on when the off-the-road gear is engaged.

Disengaging the off-the road gear:

- Stop the vehicle
- Move the gear lever to neutral **N**
- Switch off the rocker switch (3) for the off the road gear. Indicator lamp (1) goes out when the off-the-road gear is disengaged.
- Switch on the on-the-road gear with rocker switch (5). Indicator lamp (2) is on when the on-the-road gear is engaged

https://www.besttruckmanuals.com/

3.7.2 Longitudinal differential lock in transfer case

The longitudinal differential lock in the transfer case prevents the wheels of the individually driven axle lines from spinning when driving over slippery ground.

The longitudinal differential lock can only be engaged when the key switch for the carrier level adjustment system is switched on. The truck crane can then only be driven in gears **1**, **2** and **R**.

Caution: Only engage and disengage the differential lock while the vehicle is stationary. When driving round corners on firm ground the differential lock must not be engaged. Do not leave the differential lock engaged longer than necessary. It must without fail be disengaged on firm ground.

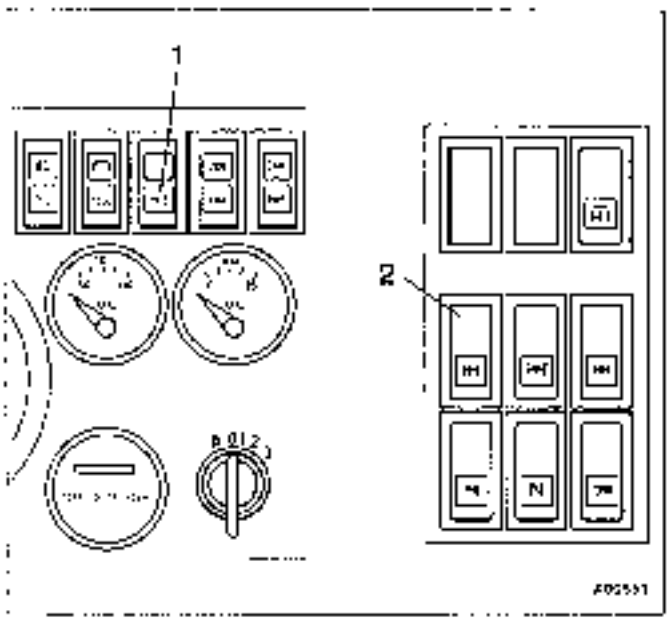

Engaging the differential lock:

- Stop the vehicle
- Move the gear lever to neutral **N**
- Straighten the wheels
- Switch on the key switch for the carrier level adjustment system
- Switch on rocker switch (**2**)
- Start to move the vehicle slowly until the indicator lamp (**1**) "longitudinal differential lock in transfer case" is on.

Disengaging the differential lock:

- Stop the vehicle
- Move the gear to lever neutral "**N**"
- Switch rocker switch (**2**) off
  The indicator lamp (**1**) goes out when the longitudinal differential lock is no longer engaged.

Caution: Always switch the longitudinal differential lock off with the rocker switch. Do not use the key switch for the carrier level adjustment system or the axle central drives will not function properly and may be damaged.

If the indicator lamp is still on although you have switched the longitudinal differential lock off, the lock is still engaged. Help the lock to disengage by slowly driving backwards and forwards.

https://www.besttruckmanuals.com/

3.7.3 Longitudinal differential lock on the transfer drive axle (optional equipment only with drive 10 x 8)

The longitudinal differential lock on the transfer drive axle on the fourth axle line ensures that the propulsion power is transferred equally to the fourth and fifth axle lines.

The longitudinal differential lock can only be engaged when the key switch for the carrier adjustment system is switched on. The truck crane can then only be driven in gears **1**, **2** and **R**.

Caution:

Only engage and disengage the differential lock while the vehicle is stationary. The differential lock must not be engaged on firm ground when turning corners. Do not leave the differential lock engaged for longer than necessary. It must without fail be disengaged on firm ground

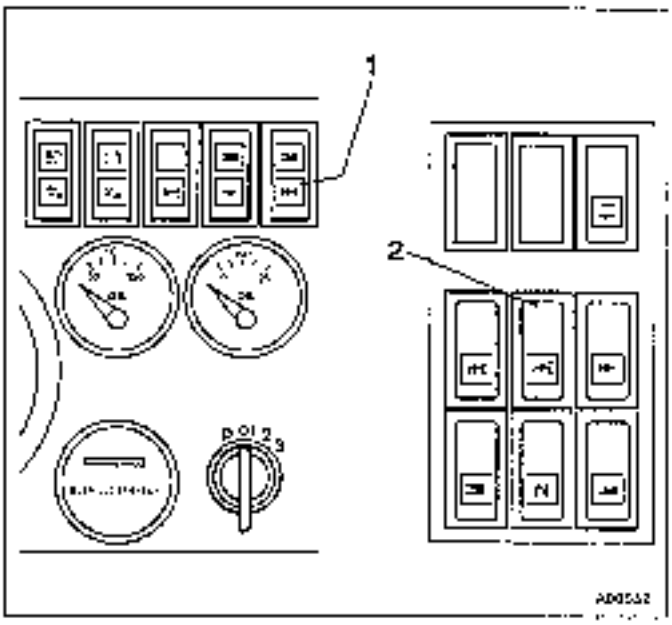

Engaging the differential lock:

- Stop the vehicle
- Move the gear lever to neutral "N"
- Straighten the wheels
- Switch on the key switch for the carrier level adjustment system
- Switch on the rocker switch (**2**)
- Start to move the vehicle slowly until indicator lamp (**1**) "longitudinal differential lock in transfer drive axle" is on.

Disengaging the differential lock:

- Stop the vehicle
- Move the gear lever to neutral **N**
- Turn rocker switch (**2**) off
  Indicator lamp (**1**) goes out when the longitudinal differential lock is no longer engaged.

Caution:

Always switch the longitudinal differential lock off with the rocker switch. Do not use the key switch for the carrier level adjustment system or the axle central drives will not function properly and may be damaged.

If the indicator lamp is still on although you have switched the longitudinal differential lock off the lock is still engaged. Help the lock to disengage by slowly driving backwards and forwards.

https://www.besttruckmanuals.com/

3.7.4 Driving the third axle line

When driving off the road the third axle line drive can be switched on additionally.

The drive can only be switched on when the key switch for the carrier level adjustment system is switched on. The truck crane can then only be driven in gears **1**, **2** and **R**.

Caution: Only switch the drive for the third axle line on and off while the vehicle is stationary. The drive must not be on when driving round corners on firm ground. It must without fail be disengaged on firm ground.

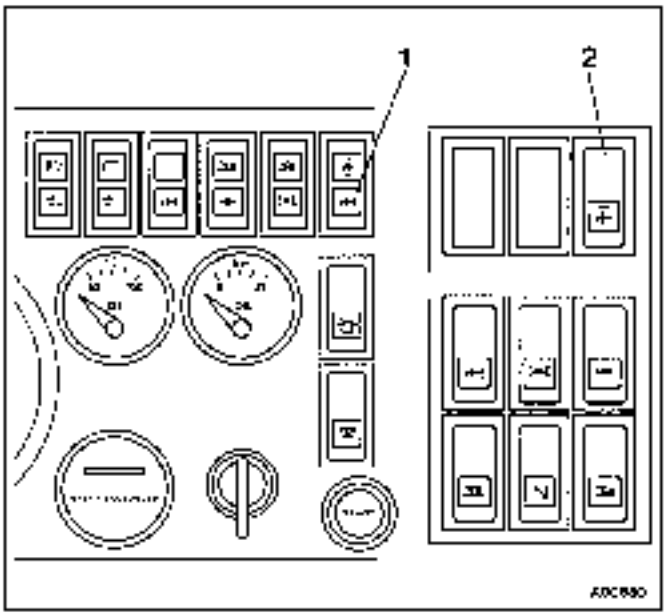

Switching on the drive:

- Stop the vehicle
- Move the gear lever to neutral **N**
- Straighten the wheels
- Switch on the key switch for the carrier level adjustment system
- Switch on rocker switch (**2**)
- Start to move the vehicle slowly until the indicator lamp (**1**) "third axle line drive" comes on

Switching off the drive

- Stop the vehicle
- Move the gear lever to neutral **N**
- Switch rocker switch (**2**) off
  indicator lamp (**1**) goes out when the third axle line is no longer driven.

Caution: Always switch the third axle line drive off with the rocker switch.
Do not use the key switch for the carrier level adjustment system or the axle central drive will not function properly and may be damaged.

If the indicator lamp is still on although you have switched the third axle line drive off, the drive is still on. Help the drive to switch off by slowly driving backwards and forwards

https://www.besttruckmanuals.com/

3.7.5 Transverse differential locks in the axle lines

The transverse differential locks in the driven axle lines prevent single wheels from spinning when driving on slippery ground.
The transverse differential locks can only be engaged when the key switch for the carrier level adjustment system is switched on. The truck crane can then only be driven in gears **1**, **2** and **R**.

Caution:

Only engage and disengage the transverse differential locks while the vehicle is stationary. The transverse differential locks must not be engaged on firm ground when driving round corners. Do not leave the transverse differential locks on longer than absolutely necessary. Disengage them on firm ground without fail.

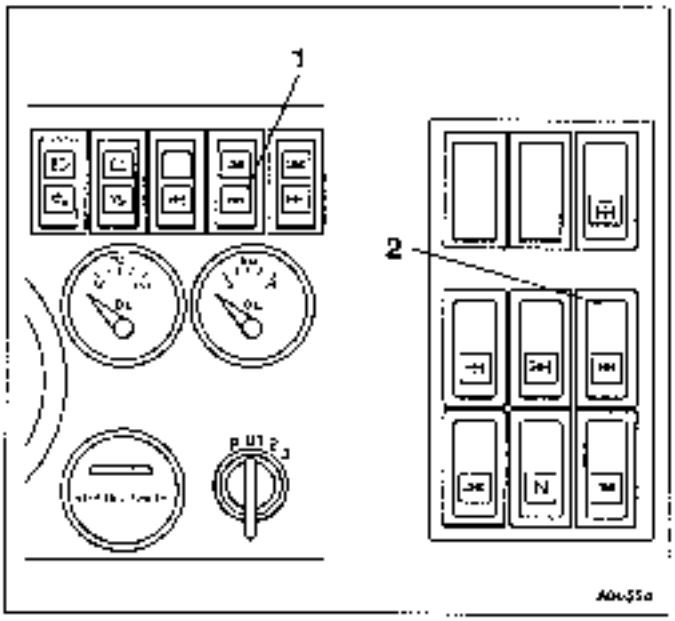

Engaging the transverse differential locks

- Stop the vehicle
- Move the gear lever to neutral **N**
- Straighten the wheels
- Switch on the key switch for the carrier level adjustment system
- Switch rocker switch (**2**) on
- Start to move the vehicle slowly until the indicator lamp (**1**) "transverse differential locks" is on.

Disengaging the transverse differential locks:

- Stop the vehicle
- Move the gear lever to neutral **N**
- Switch rocker switch (**2**) off
  Indicator lamp (**1**) **flashes** if any **transverse differential locks are still engaged**. It does not go **out** until **all** transverse differential locks on all axle lines are disengaged.

Caution:

If the indicator lamp flashes although you have switched the transverse differential lock off there are locks which are still engaged. Help the lock to disengage by slowly driving backwards and forwards, turning the wheels slightly.

Always switch the transverse differential locks off with the rocker switch. Do not use the key switch for the carrier level adjustment system or the axle central drive will not function properly and may be damaged.

https://www.besttruckmanuals.com/

3.7.6 Carrier level adjustment system

To improve the off-the-road handling of the truck crane its ground clearance and the angle of its chassis can be altered with the carrier level adjustment system.

The carrier level adjustment system is locked with a key switch so that it can not be activated accidentally. When this key switch is turned on the following functions can also be activated:

- Third axle line drive
- Longitudinal differential lock in the transfer case
- Longitudinal differential lock on the transfer drive axle, fourth axle line (optional equipment only with 10 x 8 drive)
- Transverse differential locks in the driven axle lines
- Blocking of gears **3**, **4** and **5** of the automatic gearbox (the vehicle can then only be driven in gears **1**, **2** and **R**)

Switching on the carrier level adjustment system

The vehicle is stationary, the parking brake is on, the gear lever is in the neutral position **N**.

Caution: Whenever the level of the carrier is adjusted the suspension locking system must be switched off on all axle lines. All differential locks and the third axle line drive must also be disengaged.

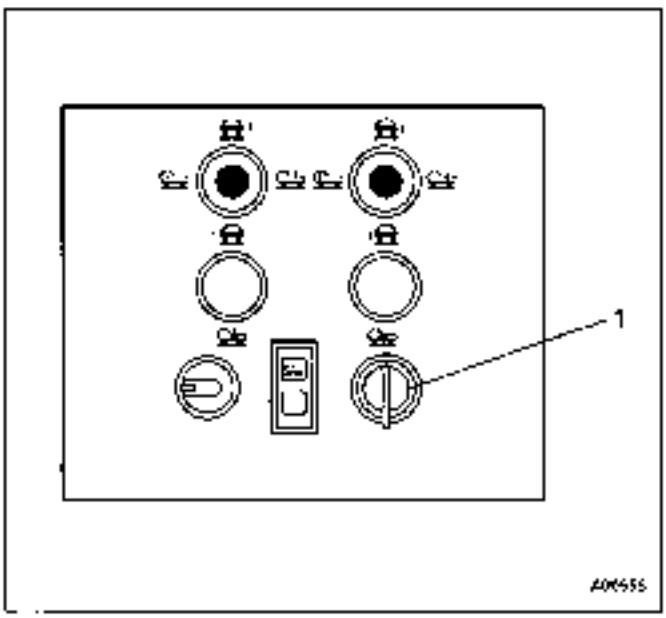

- Insert the key into the key switch (1) in the driver's cab and turn it to the right.
  In this position push the key in and with it still pushed in turn it back to the left.
- For changing the level of the carrier keep the engine speed at 1000 to 1300 min $^{-1}$ by pressing the accelerator .

https://www.besttruckmanuals.com/

Raising and lowering the complete truck crane

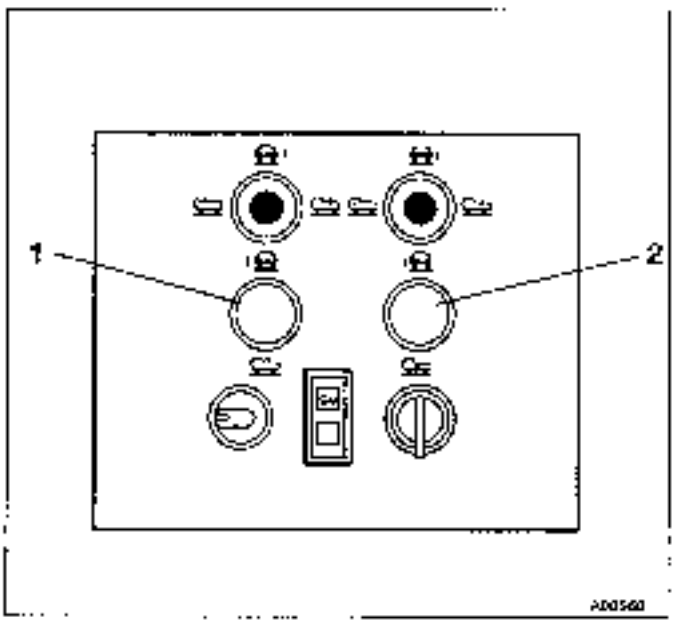

The complete truck crane is raised with switch (**1**) and lowered with switch (**2**).

The suspension cylinders are adjustable over the full working stroke.

Caution:

The suspension range of the carrier changes in accordance with the amount by which the carrier is raised or lowered. When the level of the carrier has been changed you may only drive slowly, otherwise damage may be caused to the suspension cylinder assemblies.

Tilting the truck crane longitudinally or transversely

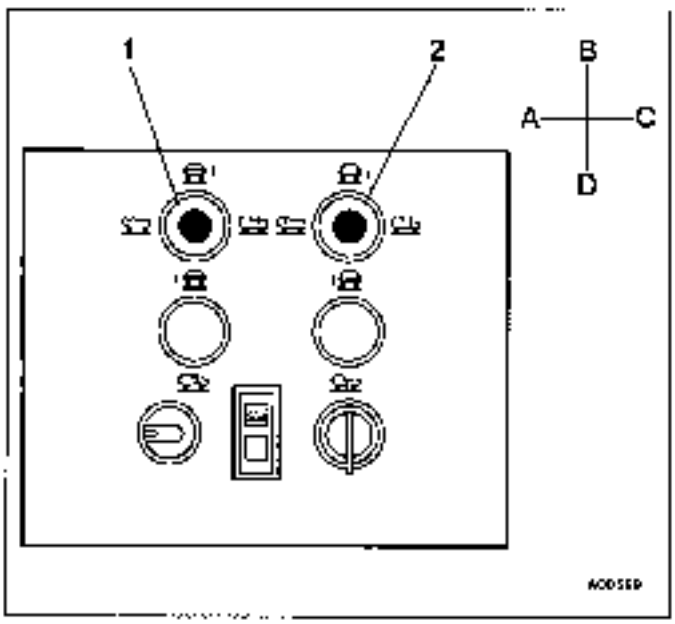

The truck crane is raised at one end (longitudinal tilt) or at one side (transverse tilt) with joystick (1), and is lowered with joystick (2).

Both joysticks alter the level of the carrier as follows:

A front

B left

C rear

D right

https://www.besttruckmanuals.com/

Switching off the carrier level adjustment system

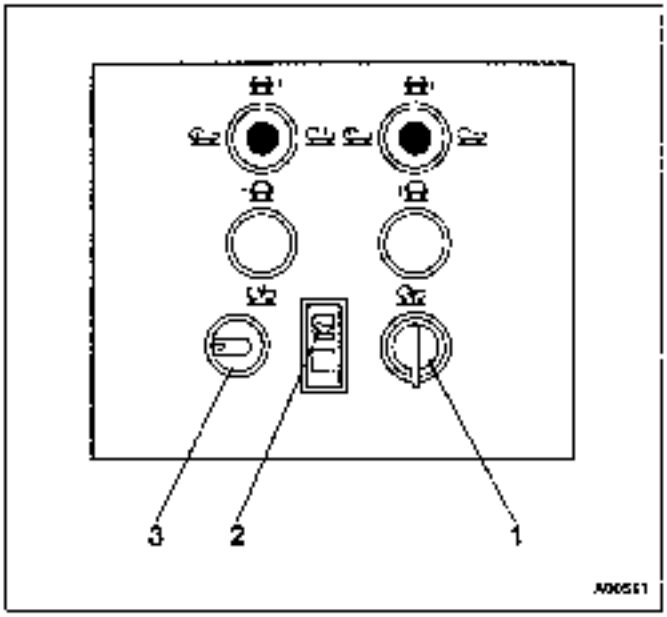

- Turn key (1) to the right until it disengages and take it out of the switch.

Caution: Do not switch the carrier level adjustment system off until the carrier is at the on-the-road level.

Setting the carrier level adjustment system to "on-the-road"

- Park the truck crane on level ground
- Turn knob (3) to the left or right until the warning light (2) goes out. The warning light goes out as soon as the on-the-road level is reached.
- Switch off the level adjustment system.

https://www.besttruckmanuals.com/

3.7.7 Freeing the carrier when it is stuck in terrain

If the carrier gets stuck in terrain you can try to free it under its own steam by driving it backwards and forwards alternately ("rocking it free").

Note: To rock the vehicle free the off-the-road gear, third axle line drive and differential locks should be engaged.

- Select gear range 1
- Press the accelerator until the vehicle comes to a standstill
- Release the accelerator
- Allow the engine speed to drop below 900 min^{-1}
- Select gear range R
- Press the accelerator
- Press the accelerator until the vehicle comes to a standstill

Repeat this process until the vehicle frees itself

If the vehicle cannot free itself it can be towed free.

Caution: Towing the vehicle free in the "forward" direction is not permitted.

Fix a long steel rope with a shackle to the towing eye at the rear of the carrier. The towing eye is near the left tail light.

Caution: Only pull the vehicle in a straight line in its own tracks. Assist the towing vehicle with the carrier engine. The vehicle must never be jerked or pulled sideways as this can damage the chassis.

https://www.besttruckmanuals.com/

3.8 Towing the crane and tow starts

3.8.1 Tow starts

The carrier engine can not be tow-started

3.8.2 Towing the crane

Danger: If the service brake system is not working properly the truck crane can only be braked by the towing vehicle. Drive therefore with extreme caution!

Caution: The vehicle may only be towed with a tow rod. The towing speed must not exceed 25 km/h (16 mph).
As the engine-dependent power-assisted steering system will not be working the vehicle will only be steered with the aid of the emergency steering pump. Never remove the output shafts from the transfer case when the truck crane has to be towed as the emergency steering pump is then no longer driven and the truck crane can then no longer be steered.

Tow rod

Insert the tow rod in the front towbar coupling

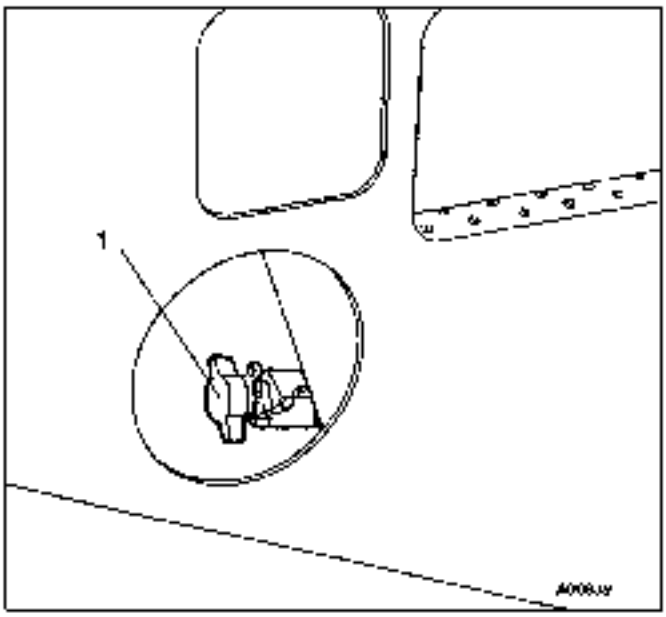

Compressed air

To supply the towed vehicle with compressed air you must connect the filler connection (1) on the truck crane to the coupling head marked "supply" on the towing vehicle. The filler connection is on the left-hand side of the vehicle under the steps to the driver's cab.

Caution: Check the pressure gauge for the compressed air system during towing. During towing the pressure must be at least 6 bar (87 psi). The warning light "brake system pressure" must not be on.

https://www.besttruckmanuals.com/

Electric power supply

Switch the battery master switch on. Turn on the ignition.

Gearbox

Disengage all differential locks and the third axle line drive

Put the transfer case into neutral **N**.

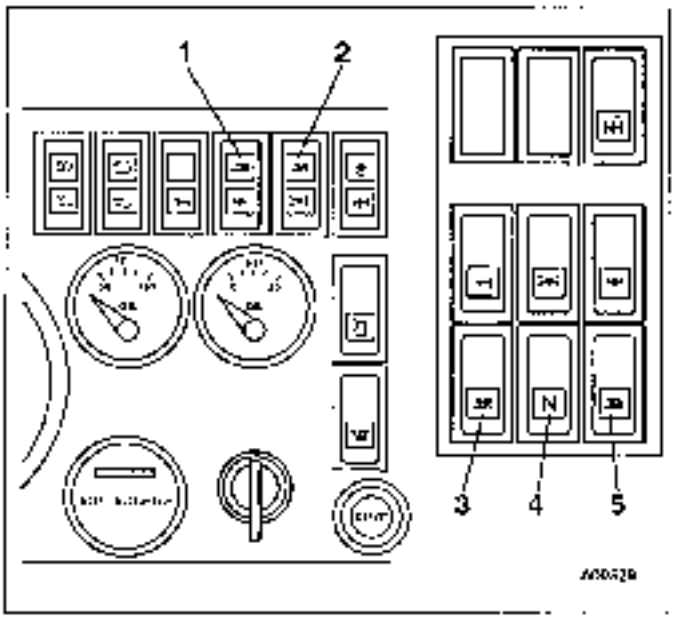

- Turn rocker switches (3) and (5) off. Turn rocker switch (4) on. Indicator lamps (1) and (2) must be off.
- Move the gear lever to neutral **N**

Caution: If the truck crane is towed without the carrier engine being on the lubrication system in the automatic gearbox is not on. The vehicle may therefore only be towed for a maximum distance of 30 km (19 miles).

Parking brake

Release the parking brake. The indicator lamp "parking brake" then goes out (please see Section 3.2.1 'Front instrument panel').

Caution: If the indicator lamp does not go out you must increase the pressure in the brake system through the filler connection.
If the indicator lamp still does not go out the parking brake has to be released mechanically.

https://www.besttruckmanuals.com/

Releasing the parking brake mechanically

Danger: The parking brake may only be released mechanically if it cannot be released automatically and only for towing the truck crane.
When the spring brake cylinders have been released mechanically the braking force of the service brake is reduced depending on how much pressure is left in the brake system.

Secure the vehicle with chocks to prevent it from rolling.

Release (i.e. compress) all springs (there are two on each axle line) from the second to the fifth axle lines:

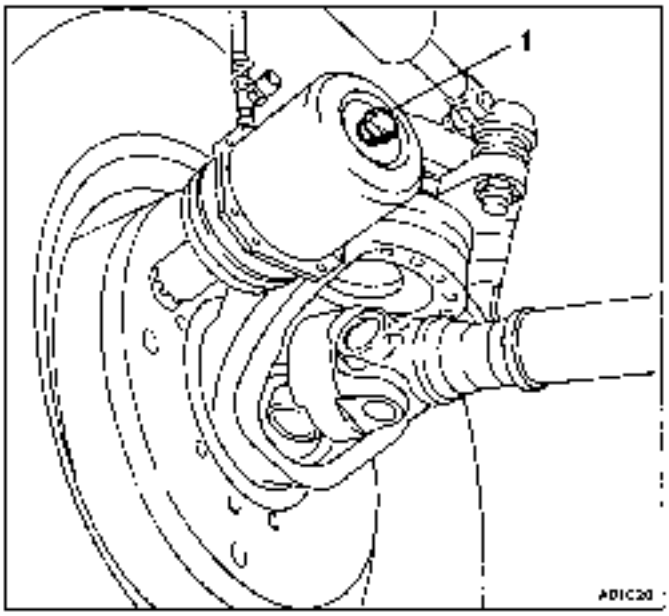

- Unscrew hexagon screw (1) (SW 27) until it is touching the spring
- Unscrew hexagon screw (1) further until the wheel brake is released
  (torque 5 to 15 Nm = 3.7 to 11.1 lbf ft)

Danger: After towing, the mechanical block on the spring brake cylinders must be removed immediately. To ensure that the safety and reliability of the truck crane are not impaired this work may only be carried out by trained specialists.

https://www.besttruckmanuals.com/

Removing the mechanical block on the spring brake cylinders:

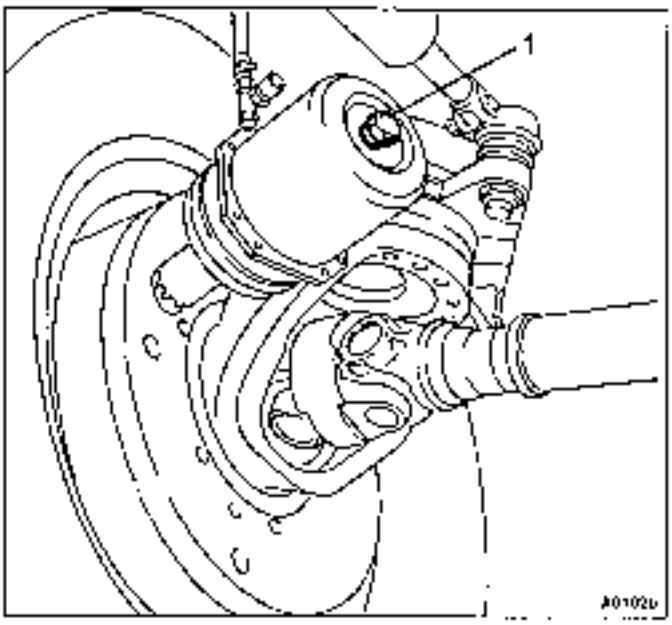

- Prevent the vehicle from rolling by securing it with chocks
- Fill up the compressed air reservoir (the warning light for the service brake system pressure must not be on)
- Do not press the service brake
- Release the parking brake (the parking brake indicator lamp must not be on)
- Screw hexagon screw (1) right in
- Tighten the hexagon screw with 40 ÷ 10 Nm (29.5 ÷ 7.4 lbf ft)
- Check that the service brake and parking brake are working.

https://www.besttruckmanuals.com/

3.9 Towing a trailer (optional equipment)

There is a towbar coupling at the rear of the carrier for towing a trailer.

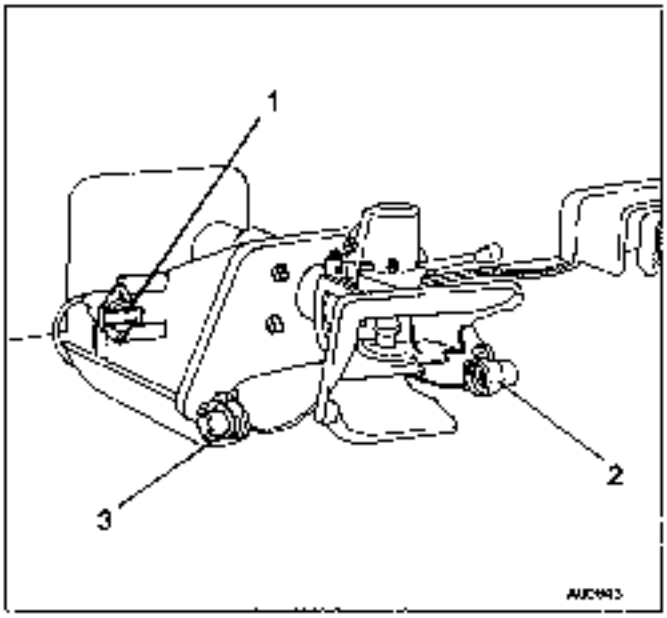

- Fit the multipin plug for the trailer's electrical system into socket (1).
- Connect the trailer's brake system up to the carrier's compressed air system (3).
- Connect the trailer's compressed air reservoir up to the carrier's compressed air reservoir.

https://www.besttruckmanuals.com/

4. Crane Operation

4.1 Crane operator's cab on superstructure

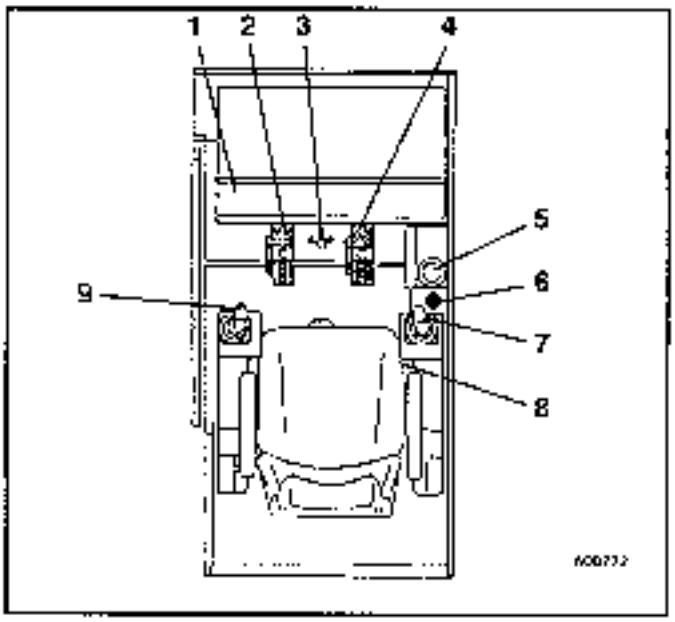

1 Front instrument panel

2 Pedal for slewing gear service brake

3 Foot-operated switch for fast speed

4 Accelerator

5 Circular spirit level

6 Throttle lever

7 Control lever for main hoist, telescope gear and derricking gear with horn button and dead-man's button

8 Crane operator's seat with seat dead man's switch and instrument panels on the right and left-hand sides under the arm rests

9 Control lever for auxiliary hoist and slewing gear with horn button and dead man's but ton

https://www.besttruckmanuals.com/

4.1.1 Front instrument panel

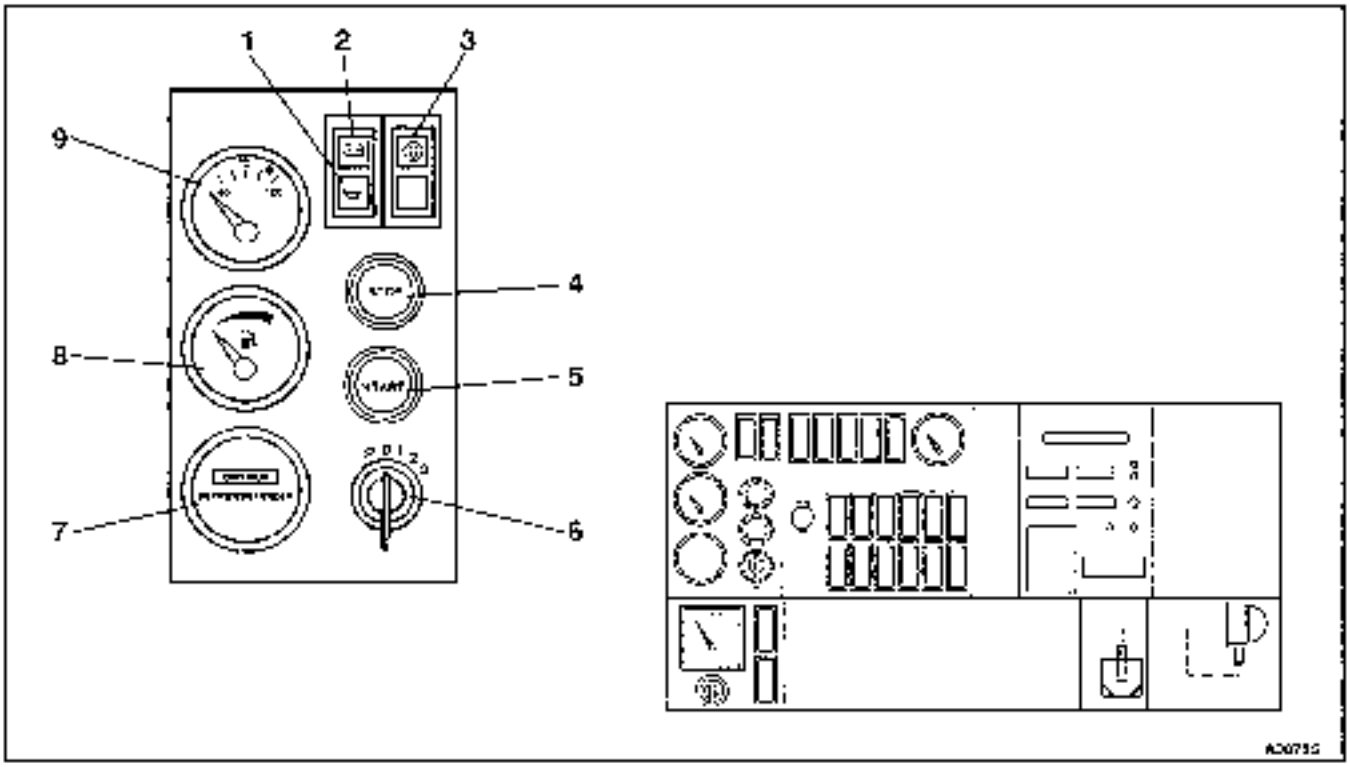

1 Warning light "crane engine oil pressure"

2 Charge indicator lamp

3 Warning light "air filter, crane engine"

4 Push button "stop engine, crane engine"

5 Starter button "crane engine"

6 Combined lighting and ignition switch
The key can be removed in positions **P** and **O**
- **P** Instrument lighting on
- **O** All functions off (except the cooling phase of the additional (optional) heating system)
- 1 Ignition and crane functions on
- **2** As 1 plus instrument lighting on
- 3 As **2**

7 Operating hour counter, crane engine

8 Fuel gauge for superstructure

9 Crane engine oil temperature gauge with warning light

https://www.besttruckmanuals.com/

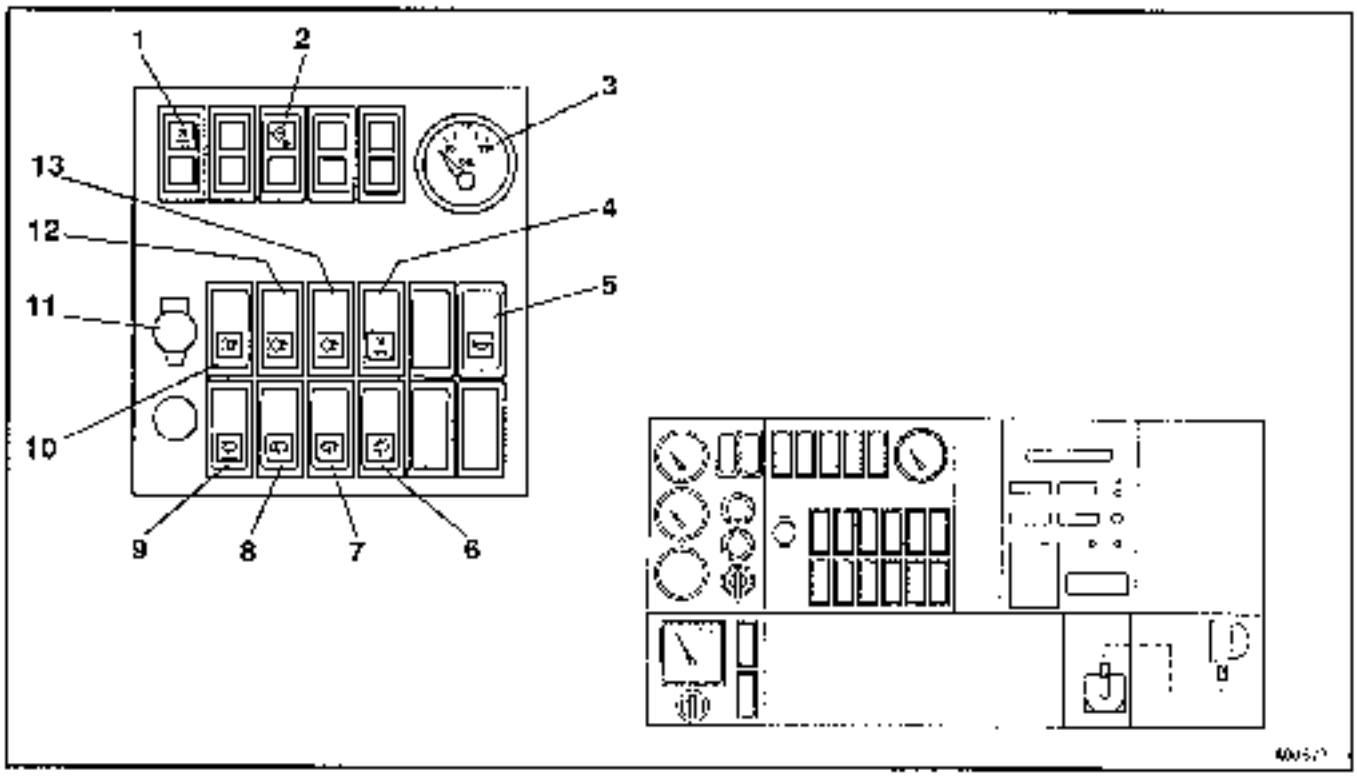

1 Indicator lamp "additional heating system" (optional equipment)

2 Indicator lamp "return line filter"

3 Hydraulic oil temperature gauge

4 Rocker switch "additional heating system" (optional equipment)

5 Rocker switch "horn"

6 Rocker switch "front windscreen washing system"

7 Rocker switch "intermittent wiper setting" front windscreen and roof window wipers

8 Rocker switch "front windscreen wipers"

9 Rocker switch "roof window wipers"

10 Rocker switch "left socket for spotlight for working area"

11 24 V socket

12 Rocker switch "right socket for spotlight for working area"

13 Rocker switch "spotlight for checking hoist rope" (optional equipment)

https://www.besttruckmanuals.com/

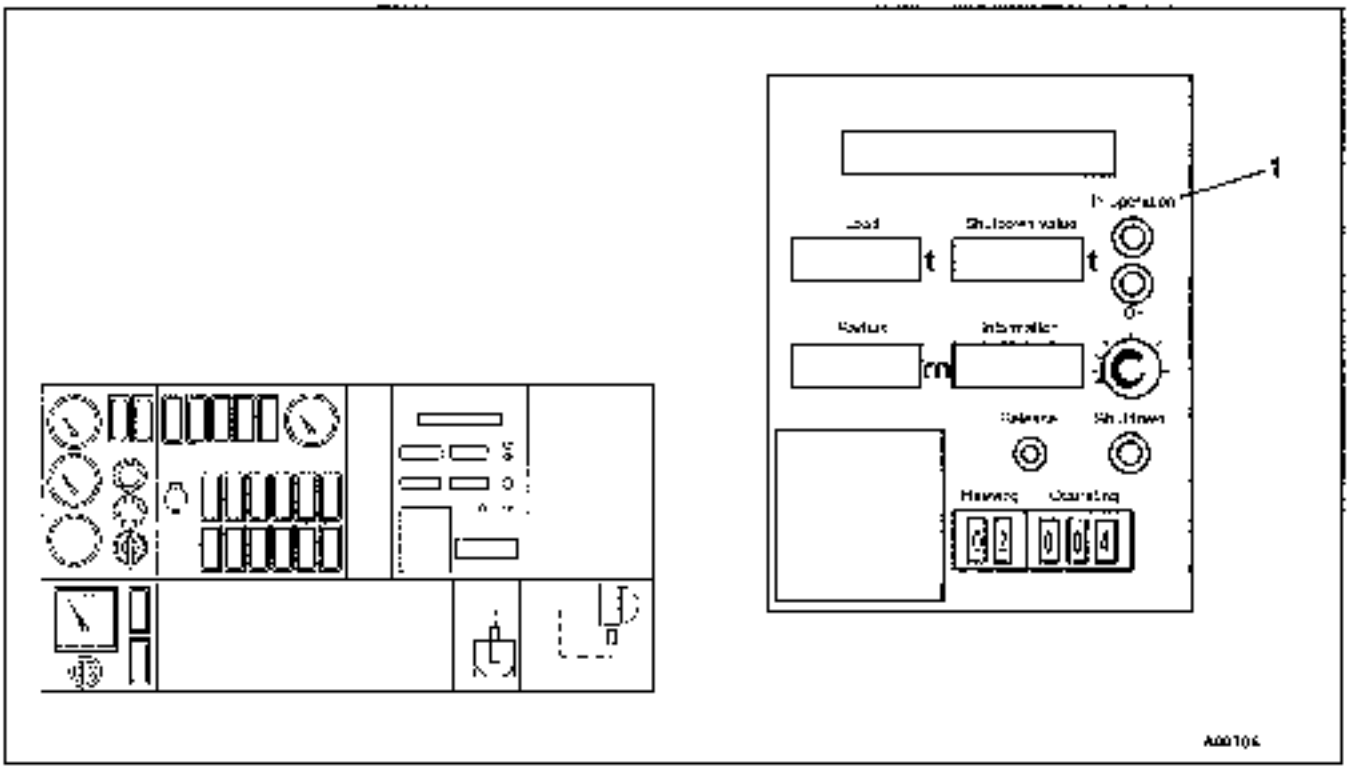

1 Plug in module SLI (Safe Load indicator), please see Section 4.1.4 "Controls for the SLI"

https://www.besttruckmanuals.com/

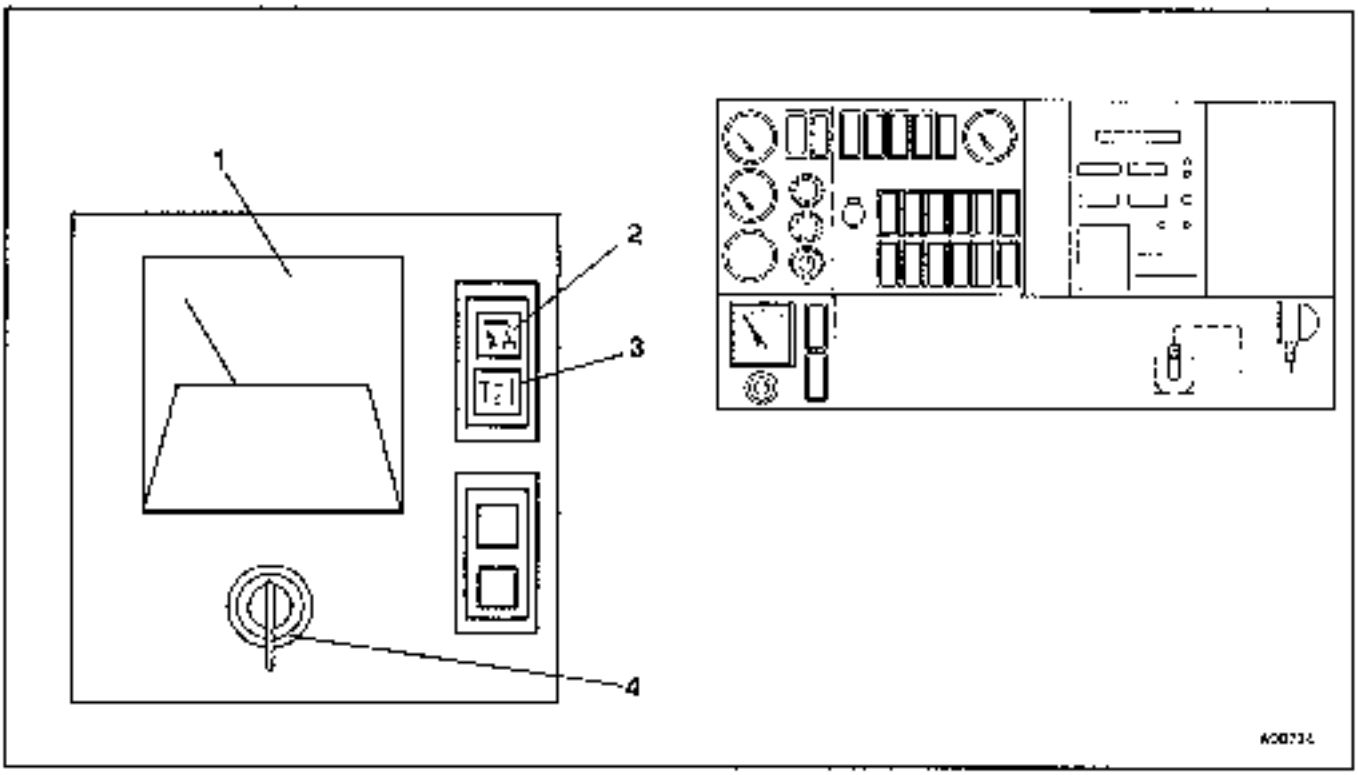

1 Anemometer

2 Warning light "SLI shutdown"

3 Warning light "shutdown, lifting limit switch"

4 Key switch "SLI override"

https://www.besttruckmanuals.com/

4.1.2 Instrument panels on crane operator's seat

Under right-hand arm rest

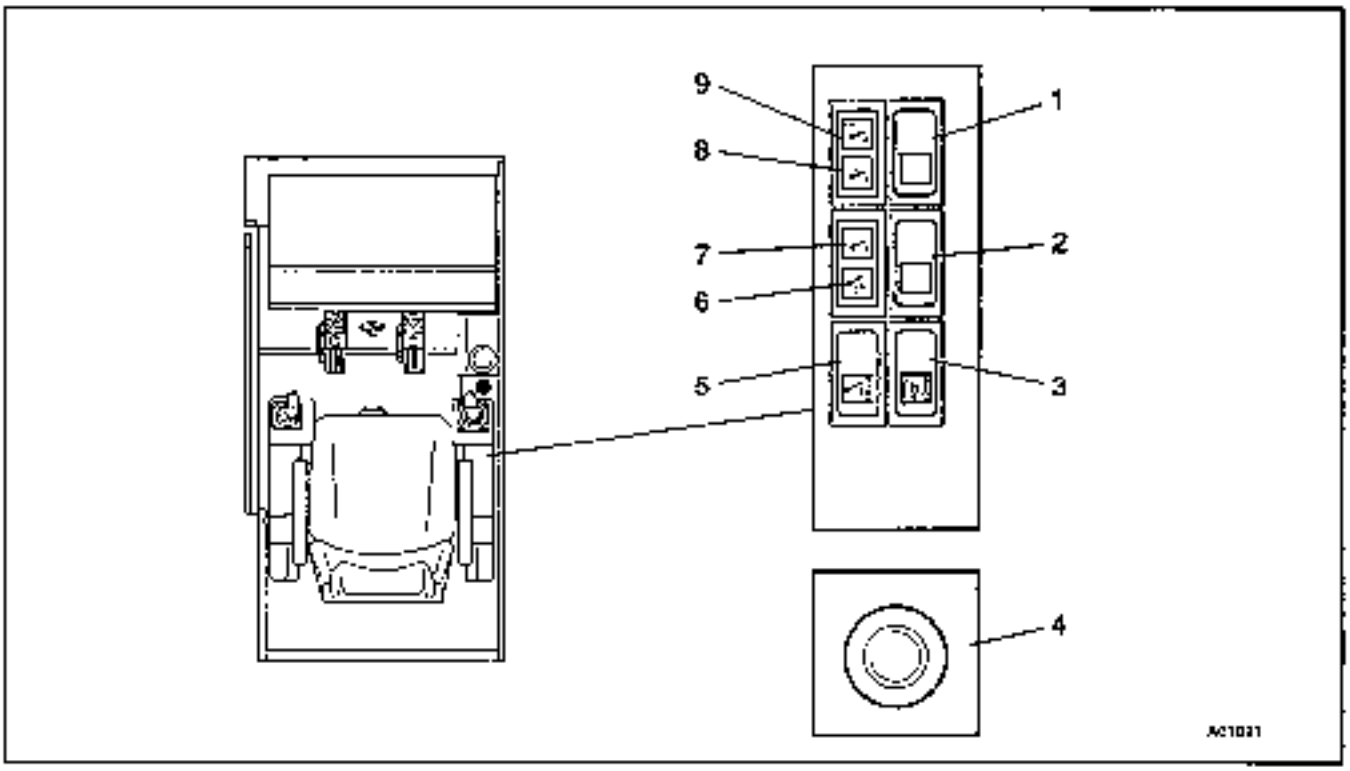

1 Rocker switch "change-over to telescoping telescope section I or II and III"

2 Rocker switch "change-over for right hand control lever"

pressed in at top: telescoping
pressed in at bottom: derricking

3 Rocker switch "main hoist on/off"

4 Knob "slewing gear speed"

5 Rocker switch "derricking gear on/off"

6 Indicator lamp "control lever switched to derricking"

7 Indicator lamp "control lever switched to telescoping"

8 Indicator lamp "telescoping tel. section I"

9 Indicator lamp "telescoping tel. sections II and III"

https://www.besttruckmanuals.com/

Under left-hand arm rest

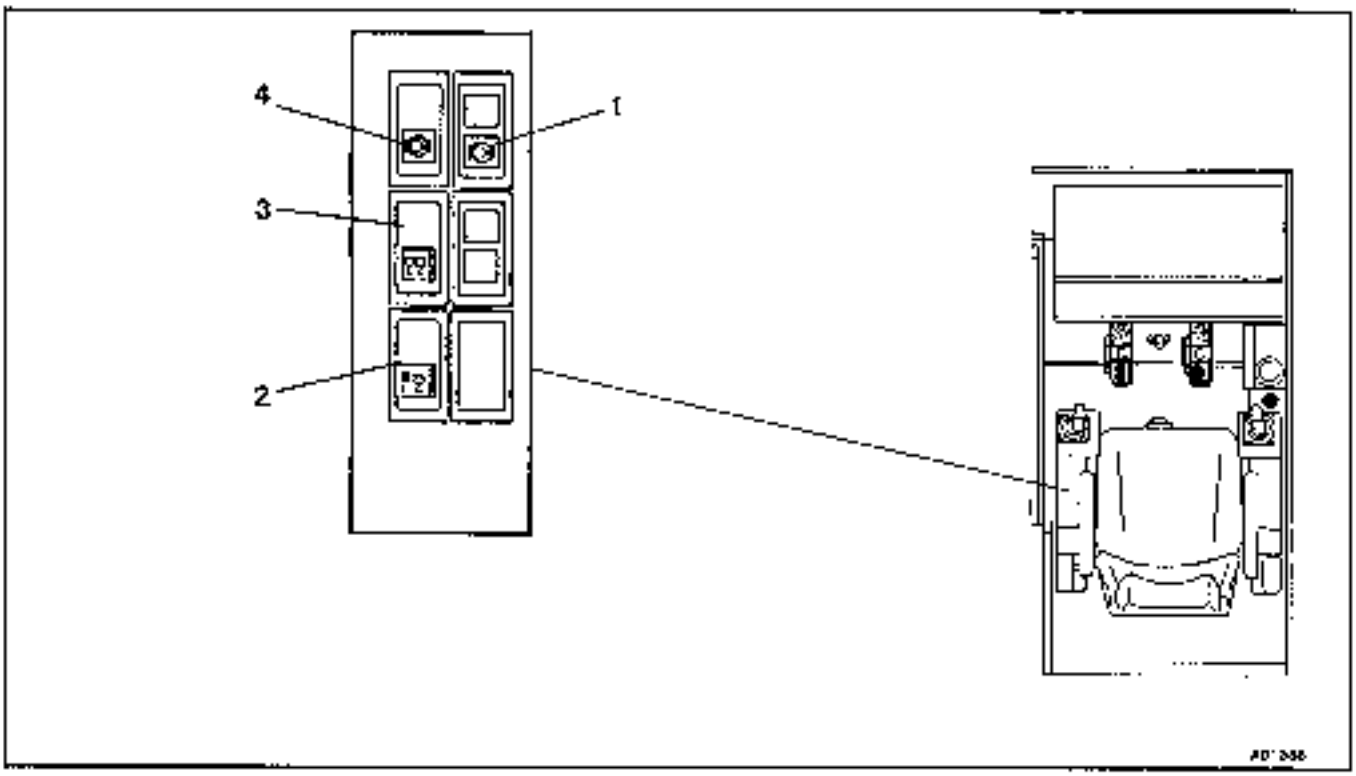

1 Indicator lamp "slewing gear permanent brake"

2 Rocker switch "auxiliary hoist on/off"

3 Rocker switch "two-hook operation on/off" (optional equipment)

4 Rocker switch "slewing gear permanent brake on/off"

https://www.besttruckmanuals.com/

4.1.3 Control lever

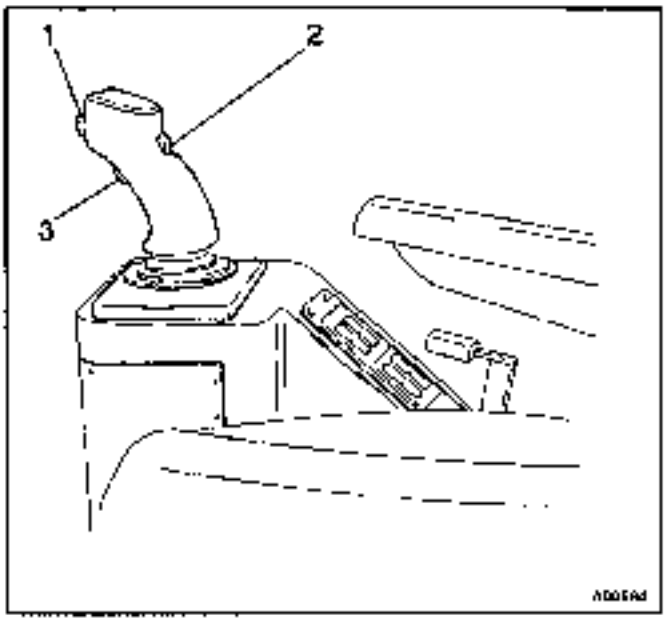

1 Horn button

2 Synchro

3 Dead man's switch

https://www.besttruckmanuals.com/

4.1.4 Controls of the safe load indicator (SLI)

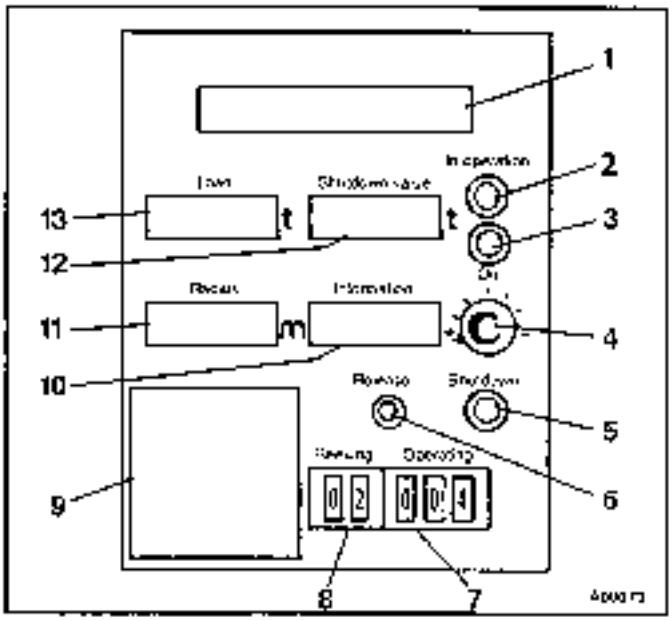

1 Status indicator (operating configuration and fault indication)

2 Indicator lamp "SLI in operation"

3 Indicator lamp "power on"

4 Selection switch for indication of information:
- a degree of utilization in %
- b possible hook height in ft
- c boom length in ft
- c boom angle in degrees
- e no function
- f piston area pressure in derricking cylinder in bar
- g ring area pressure in derricking cylinder in bar
- h no function
- i no function
- k no function

5 Warning light "shutdown"

6 Release button

7 Preselection of operating configuration (SLI code)

8 Preselection of reeving condition

9 SLI brief information

10 Indicator "information"

11 Indicator "radius"

12 Indicator "shutdown value"

13 Indicator "load"

https://www.besttruckmanuals.com/

4.2 Heating system for the crane operator's cab

4.2.1 Heating the crane operator's cab

The crane operator's cab is heated by a heat exchanger with heat from the coolant for the crane engine.

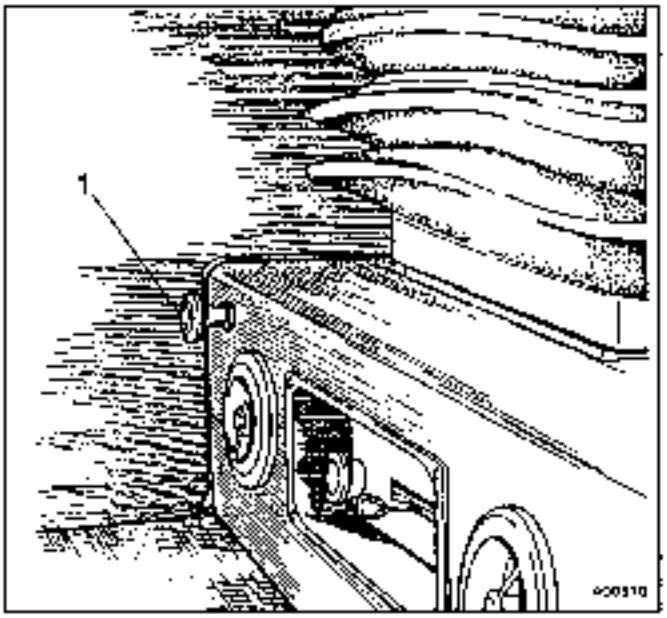

The heating can be set to fresh or recirculated air

The desired mode of operation is set with the Bowden control cable (**1**).

Knob pushed in = fresh air

Knob pulled out = recirculated air

Intermediate positions are possible

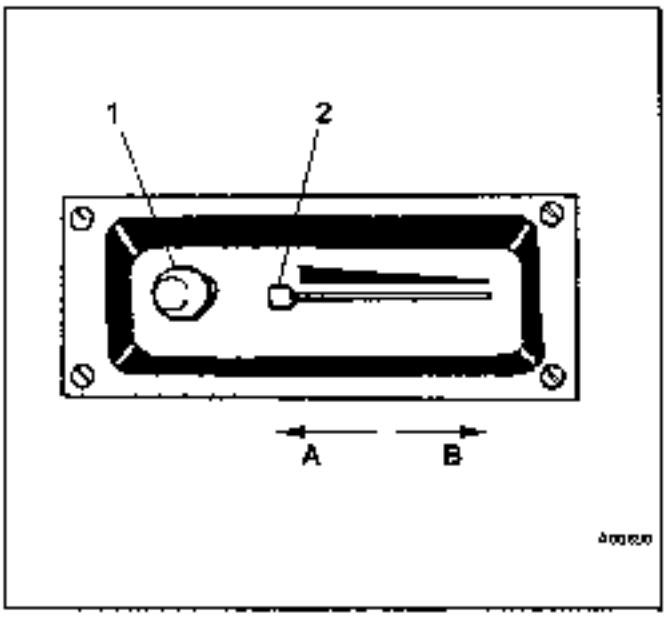

The required temperature is set with the temperature regulator (**2**).

Position **A**: warm

Position **B**: cold

The blower is turned on with knob (**1**).

The blower positions are 0 (off), **I**, **II** and **III** (maximum setting)

https://www.besttruckmanuals.com/

4.2.2 Ventilating the driver's cab

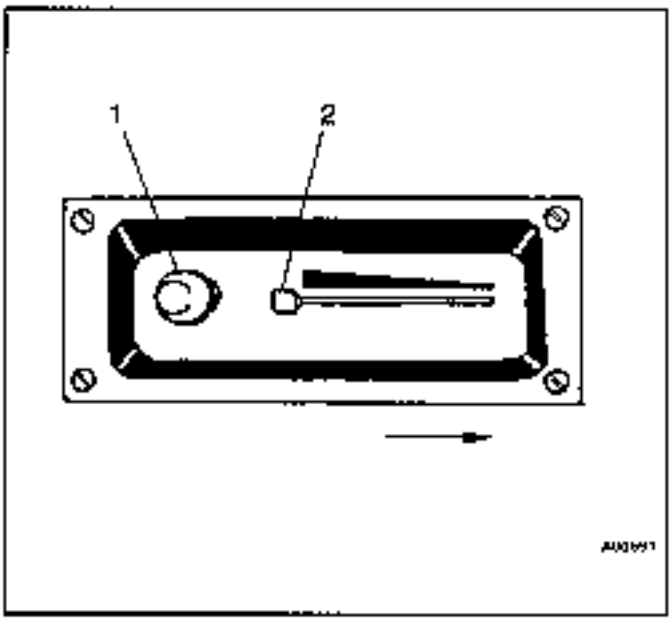

The temperature regulator (2) is moved to the cold position and the blower is switched on with knob (1).

The driver's cab can also be ventilated by opening the glass roof.

4.2.3 Additional water heating system (optional equipment)

An additional water heating system which is independent of the engine warms up the coolant for the engine. Heat is produced by combusting fuel from the tank for the superstructure. The heating system runs on the superstructure's electrical system. The additional heating system can be used while the engine is running or when it is switched off.

When the engine is cold it can be preheated with this additional heating system before it is started. The heating system pump circulates the coolant through the engine. The temperature regulator in the crane operator's cab should be set to "cold" for this.
If the temperature regulator is moved to "warm" and the blower is switched on as described in Section 4.2.1 "Heating the crane operator's cab", the cab is simultaneously heated.

Caution: Using the additional heating system while the engine is not running runs down the batteries. The batteries then have to be recharged more frequently.

When the engine is running the additional heating system supplements the heating capacity of the engine if it is very cold outside and the coolant is not warmed up sufficiently.

When the engine reaches normal temperature the heater switches off automatically, whereas the heating system pump continues to run.

Caution: When the heater has switched off automatically the additional heating system should be switched off so that it does not start up again if the engine coolant cools down.

https://www.besttruckmanuals.com/

Switching on the additional heating system

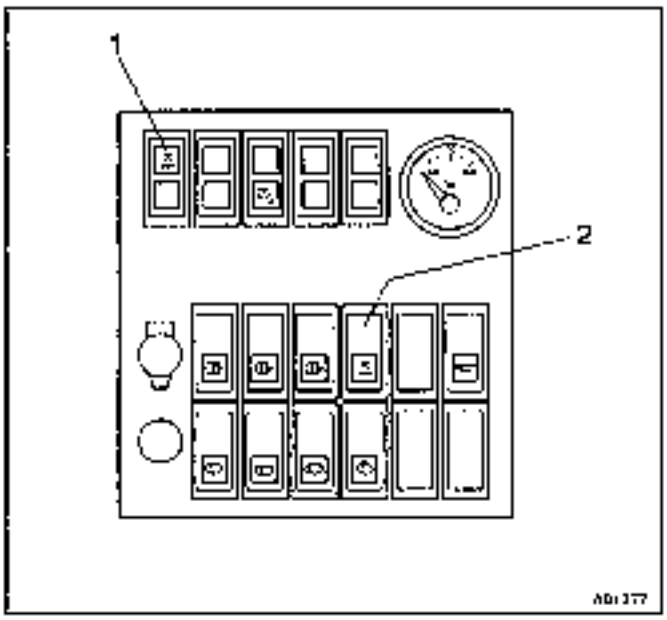

Press rocker switch (2) Indicator lamp (1) immediately lights up

After preheating for approx. 15 seconds automatic ignition begins. If the heating is not on within 30 seconds the ignition process is stopped automatically. This is indicated by the indicator lamp going out.

For a second attempt to start the heater the toggle switch must be switched off and on again.

When the heating system has ignited a thermostat in the heater takes over control of the heating. The indicator lamp indicates whether the heating system is switched on or off.

Note: If an interruption of around 10 seconds occurs while the heating system is on, it switches off automatically and the indicator lamp goes out.

Switching off the additional heating system

To switch off the additional heating system turn rocker switch (2) off. The electric heating system pump continues to run for a while (approx. 3 min.) to cool down the heater. The indicator lamp (1) does not go out until the pump switches off.

Note: If you switch off the battery master switch during the heater's cooling down phase the indicator lamp (1) goes out, but the cooling phase is not interrupted.

https://www.besttruckmanuals.com/

4.3 Before starting work on the site

4.3.1 Disengaging the free movement position for the boom (only for driving on roads with the boom placed on a trailer)

The free movement position for the boom may only be engaged while the truck crane is being driven with the boom placed on a trailer. Before the boom is lifted off the trailer the free movement position for the boom has to be disengaged.

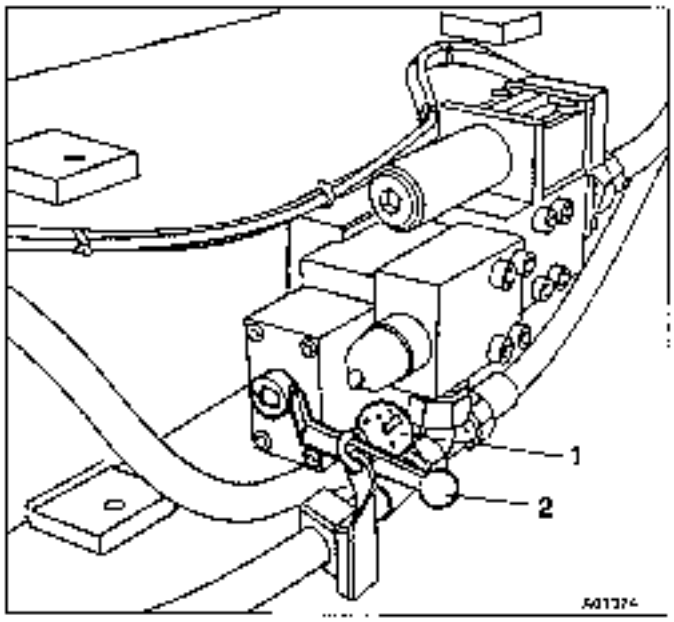

- Turn the manual lever so that it is horizontal.
- Secure the manual lever (**2**) in the horizontal position with a padlock (**1**) and remove the key.

Danger:

The manual lever must be secured in the horizontal position with the padlock. If the manual lever is moved accidentally while the boom is raised the boom will drop and accidents will occur.

https://www.besttruckmanuals.com/

4.3.2 Disengaging the free movement position for the slewing gear (only for driving on roads with the boom placed on a trailer)

The free movement position for the slewing gear may only be engaged while the truck crane is being driven with the boom placed on a trailer. Before the boom is raised off the trailer the free movement position for the slewing gear has to be disengaged.

Caution: While the free movement position for the slewing gear is engaged the slewing gear brake can not be operated **Accidents may occur.**

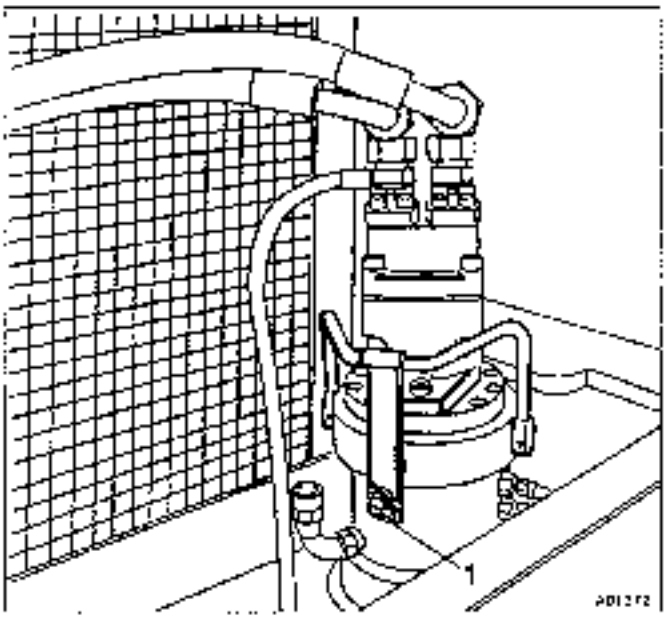

- Remove the linch pin (1) from the locking pin and remove the plate from the locking pin.

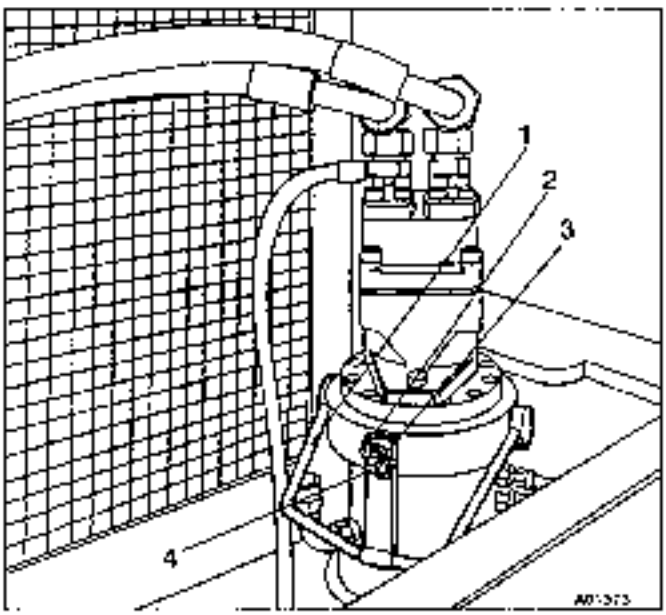

- Move the stirrup (1) down.
- Place the plate (2) back on the locking pin (3).
- Secure the locking pin with the linch pin (4).

https://www.besttruckmanuals.com/

4.3.3 Ground conditions on the site

The stability of the truck crane depends to a great extent on the condition of the ground on the site. Please see section 2 4.4 'Load bearing capacity of the ground; outriggers".

See the **outrigger pressure tables** for the pressure exerted on the ground by the outrigger pads for the planned radius and load.

Examine the actual load bearing capacity of the ground on the site and if necessary insert suitable packing materials (wooden planks) under the outrigger pads to increase their surface area. The maximum permitted pressure on the ground must not be exceeded.

4.3.4 Outriggers

Before the truck crane is supported with the outriggers, it can be raised, lowered or inclined using the carrier level adjustment system.

How to operate the carrier level adjustment system is described in Section 3.7.6

Caution:

The truck crane must be supported by the outriggers before the superstructure may be slewed.

When supported by the outriggers the suspension system must be locked on all axle lines, the truck crane must be level horizontally in the longitudinal and transverse directions, and all the wheels must be off the ground.

Locking the suspension

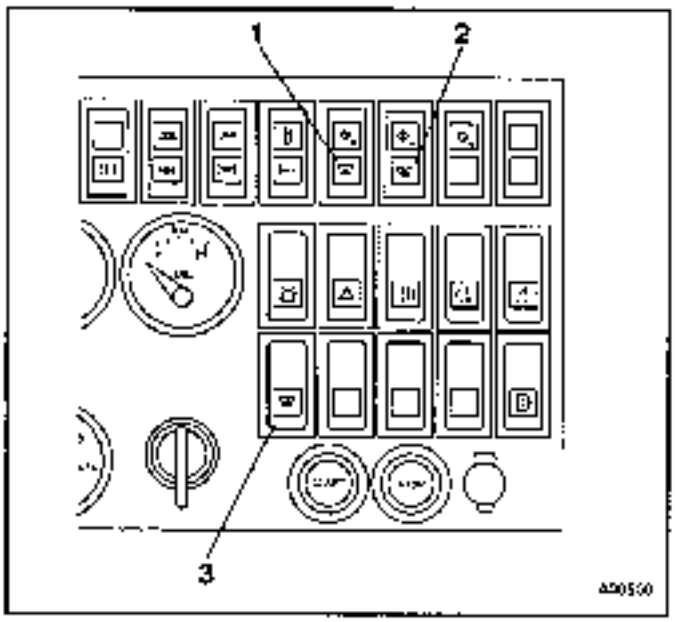

- Turn rocker switch (3) on and lock the suspension system

Indicator lamps (1) and (2) are on when the suspension system is locked on all axle lines.

https://www.besttruckmanuals.com/

Preparing to support the crane

Take note of the outrigger pressures which will occur when working with the crane and the load bearing capacity of the ground. If it is necessary to pack the outriggers select the height of the packing so that the stroke of the outrigger cylinders is still sufficient to raise and level the truck crane horizontally. For correcting the alignment the remaining stroke of the outrigger cylinders must be at least 25 mm (0.98 in). The outrigger cylinders must not therefore be extended to their end positions.

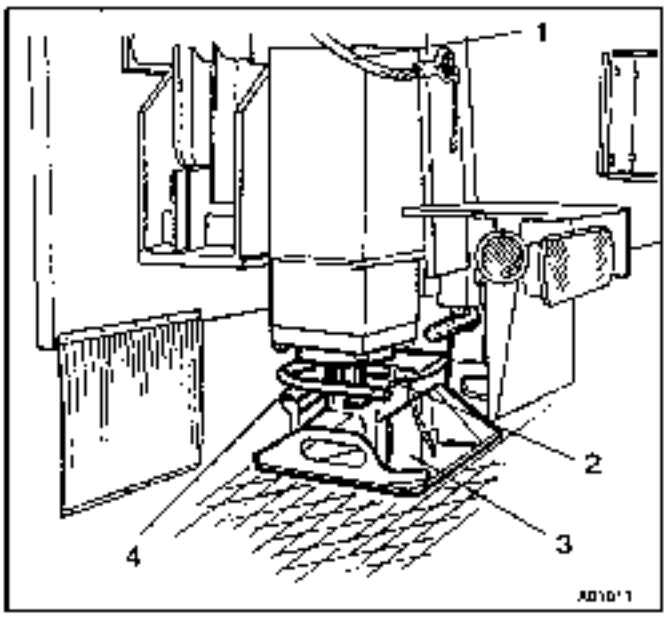

- Remove the holding ropes (1) from all outrigger beams.
- Remove the retaining pin (2) from the safety catch (4).
- Take the safety catch (4) out of its holder.
- Pull the outrigger pads (3) out as far as they will go.
- Replace the safety catch and secure it with the retaining pin.

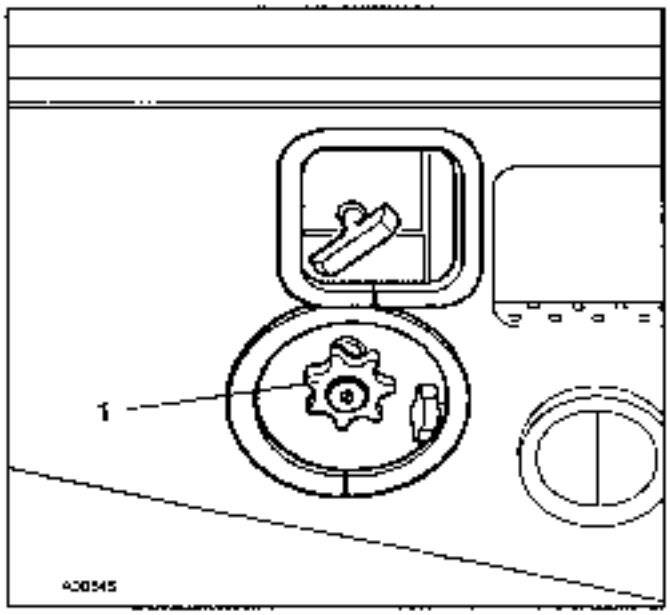

- Turn on the driving engine and set the engine speed to 1000 to 1300 min^{-1}.
  The handwheel for setting the engine speed (1) is behind the steps below the left-hand door of the driver's cab
- Turn the handwheel to the right to increase the engine speed.
  The idling speed is automatically reset by pressing the release button in the centre of the handwheel.

https://www.besttruckmanuals.com/

Operating the outriggers

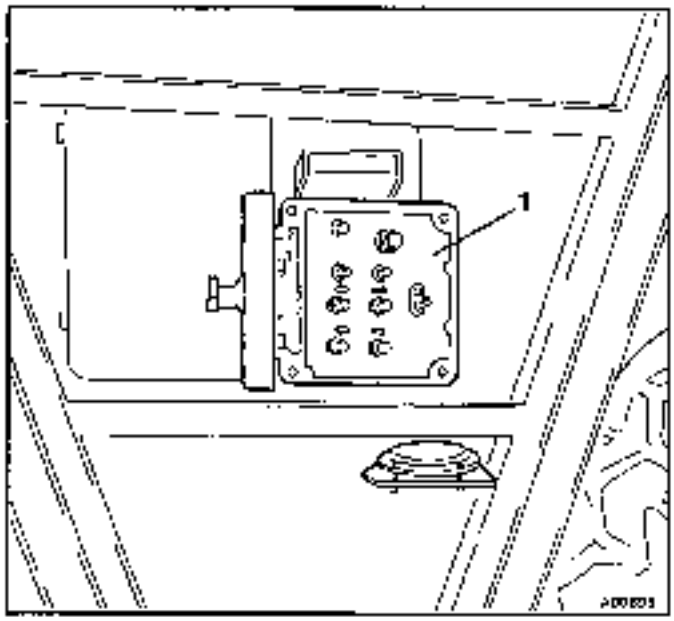

There is a control box on each side of the carrier for operating the outriggers. The control boxes (1) are behind the steps to the crane operator's cab. The steps are between the third and fourth axle lines.

Lamp (1) is on when the control box is open.

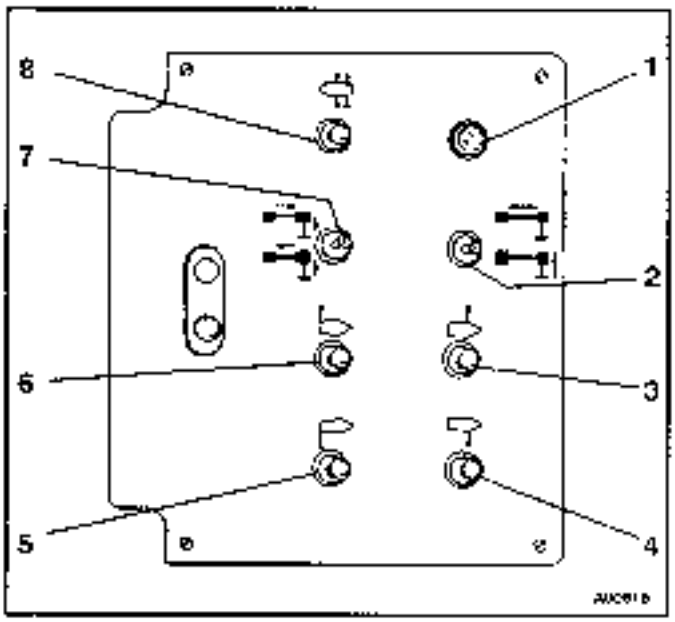

- Select the direction of movement of the outriggers with toggle switch (7):

  Up = extend
  Down = retract

- Select whether the outrigger beams or cylinders are to be moved with toggle switch (2):

  Up = extend/retract outrigger beams

  Down = extend/retract outrigger cylinders

- To build up pressure to extend the outriggers hold the central push button (8) "outriggers" down and press the relevant individual switch simultaneously:

  (3) Front left-hand outrigger
  (4) Front right-hand outrigger
  (5) Rear right-hand outrigger
  (6) Rear left-hand outrigger

https://www.besttruckmanuals.com/

Extending the outrigger beams

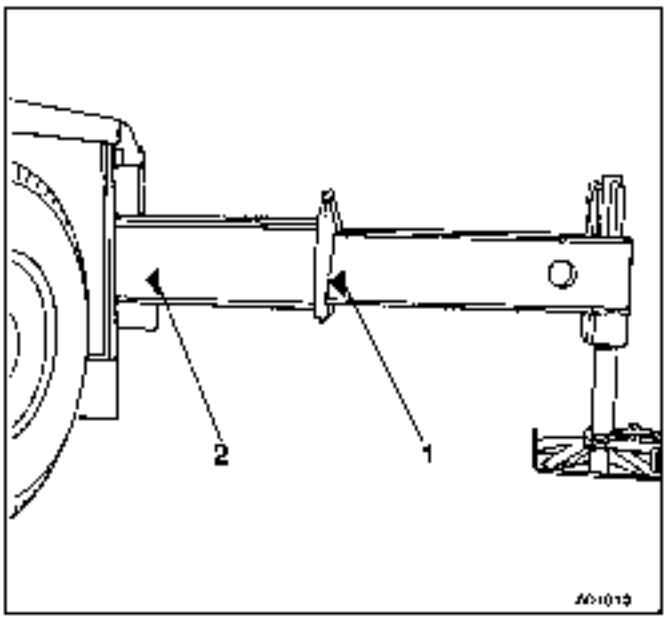

- Extend all four outrigger beams to the same span.
  With an 8-m span (26.2 ft) the arrows (**1**) on the inner outrigger beam and (**2**) on the outer outrigger beam are fully visible.
  The prescribed spans are stipulated in the **lifting capacity tables**.

Caution: If the arrows are not fully visible when the 8-m (26.2 ft) span has been selected the outrigger beams are not extended to the correct width and the **crane may overturn**.

Danger: The outriggers may only be operated from one of the two control boxes at a time.

Only operate the outriggers from the side of the crane which is in view so that you can see their movements, otherwise accidents may occur

If the outriggers are operated from both control boxes at once they will not function properly

https://www.besttruckmanuals.com/

Extending the outrigger cylinders and levelling the crane

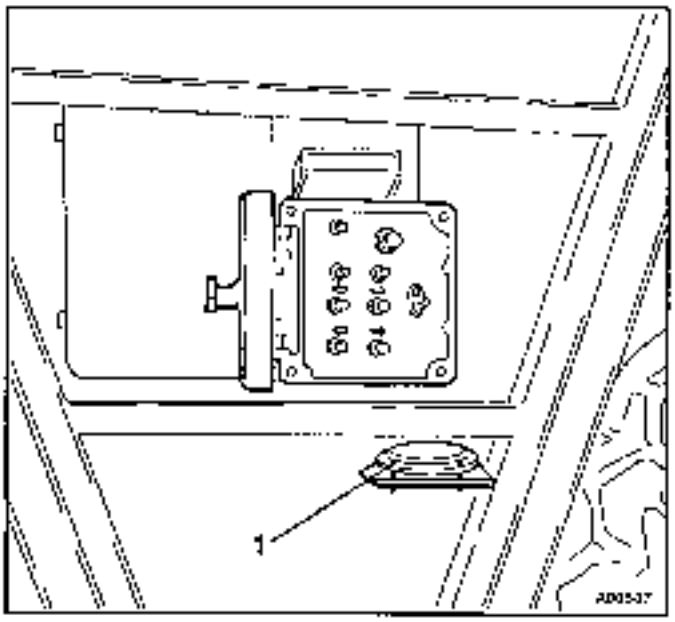

- Extend the outrigger cylinders until all the wheels are off the ground.
- Check the spirit level (1) to ensure that the crane platform is level horizontally.

Caution:

The level can be adjusted by extending/retracting individual outrigger cylinders. You must ensure, however, that the crane platform is raised and lowered equally at all four supporting points, otherwise you may overload the cylinders and cause them to buckle.

Before the crane is used you must check that it is exactly level. This is done by raising the boom to a steep angle and lowering the hook until it is just above the ground. When the superstructure is slewed in different directions the hook must always hang along the central axis of the boom.

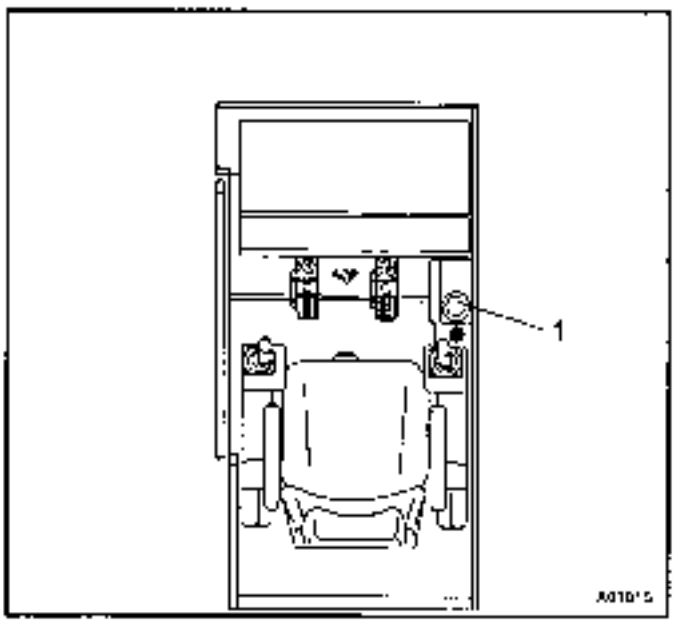

While you are working with the crane keep checking the spirit level (1) in the crane operator's cab on the superstructure.

If there is a change in the alignment you must find out why immediately and the crane must be levelled again.

https://www.besttruckmanuals.com/

Retracting the outriggers

- Retract all outrigger cylinders by equal amounts so that the crane platform stays level horizontally.
- Retract the outriggers as far as they will go
- Retract the outrigger beams as far as they will go.

Securing the outriggers for driving on roads

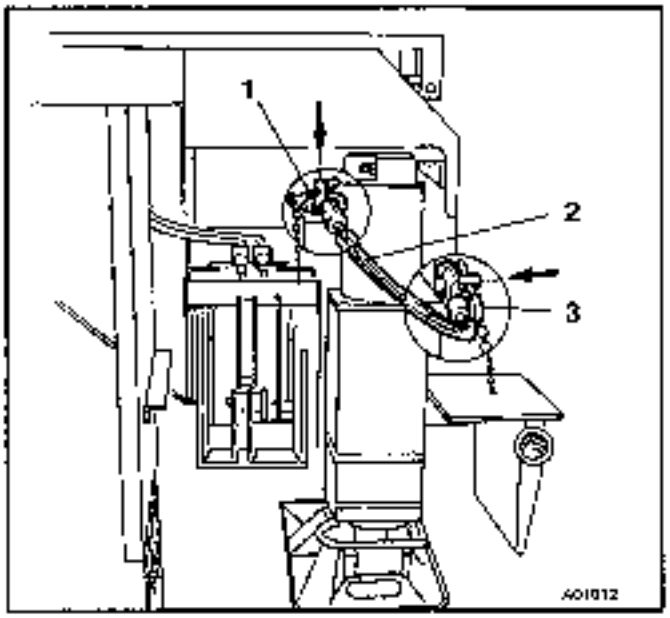

- Secure the outrigger beams with holding rope (2).
- Secure the holding rope with retaining pins (1) and (3).

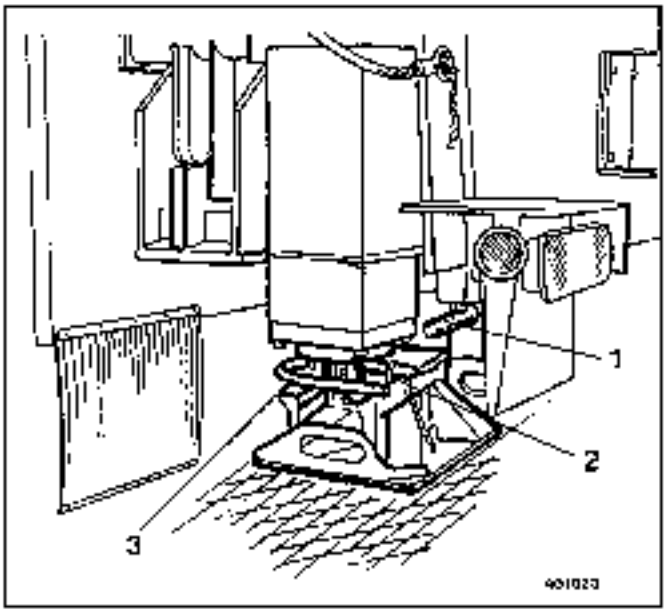

- Push the outrigger pads in as far as they will go onto the holding rod (1).
- Insert the catch (3) and secure it with the retaining pin (2).

https://www.besttruckmanuals.com/

4.3.5 Disconnecting the electric power supply to the superstructure

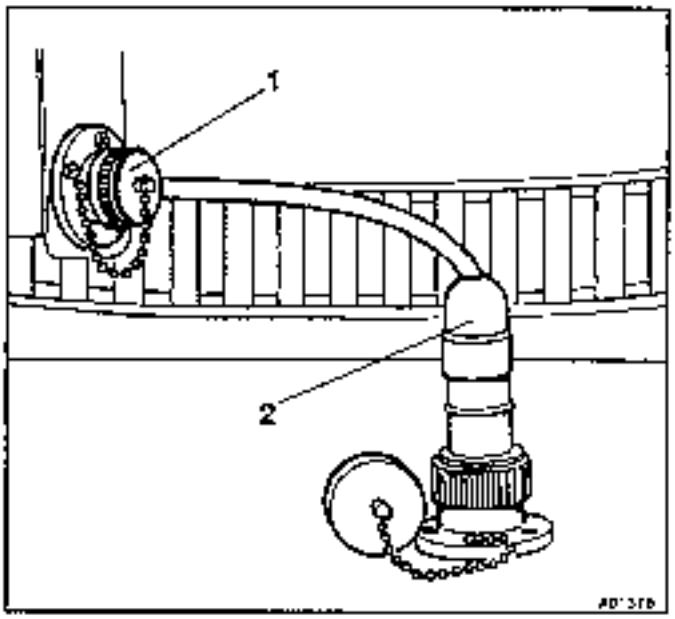

- Remove plug (2) from the socket underneath the crane operator's cab and screw it into dummy socket (1).

4.3.6 In winter

When the crane is used in winter particular note must be taken of the following points:

- Fuel for the engine and engine oil must comply with the specifications for the respective outside temperatures as listed in Mercedes Benz's operating instructions, which are supplied with these operating instructions.
- Sufficient antifreeze must be added to the engine coolant. 50% antifreeze is standard.
- If the outside temperature is below -15°C (5°F) the crane engine must be started with a starter spray (please see Section 4.3.15 "Starting the crane engine with starter spray")
- The crane engine can be preheated with the engine-independent additional water heating system (optional equipment) (please see Section 4.2.3 "Additional water heating system").
- The hydraulic oil has to be preheated (please see Section 4.5.1 "Preheating the hydraulic oil").

4.3.7 Visual inspection of the whole crane

Do a round of the vehicle, checking especially that there are no leaks (oil, fuel, water)

https://www.besttruckmanuals.com/

4.3.8 Checking the oil level in the crane engine

The prescribed oil specification and required oil fills are listed in Mercedes Benz's operating instructions supplied with these operating instructions.

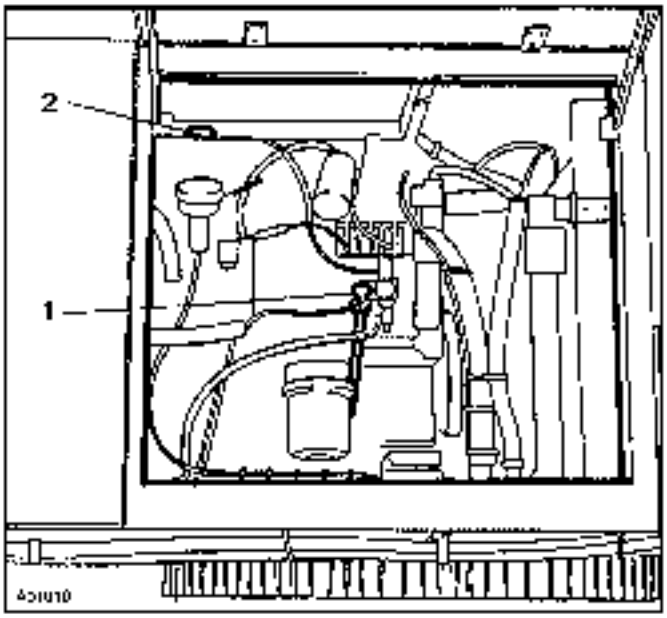

The dipstick (1) and oil filler neck (2) are behind the crane engine cover plates.

The crane engine cover plates are on the other side of the crane from the crane operator's cab.

4.3.9 Checking the windscreen washing system reservoir

Ensure that the reservoir is always filled and add a cleaning agent and antifreeze to the water.

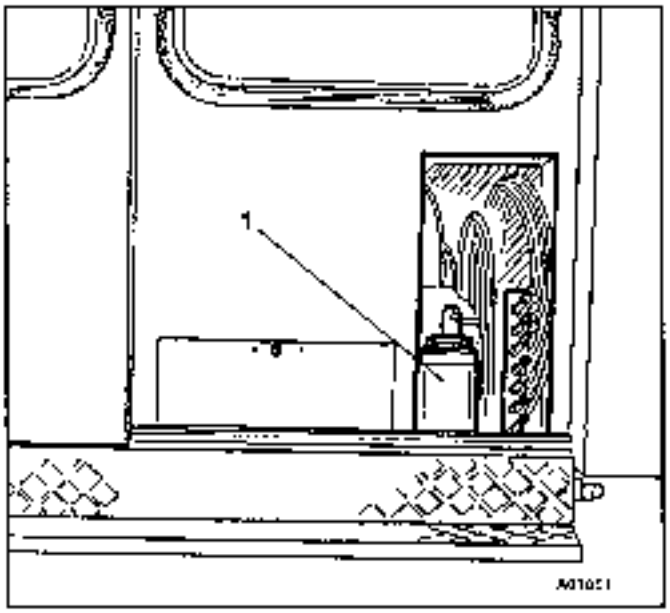

The reservoir (1) for the windscreen washing system is on the left behind the crane operator's cab.

https://www.besttruckmanuals.com/

4.3.10 Releasing the mechanical superstructure lock

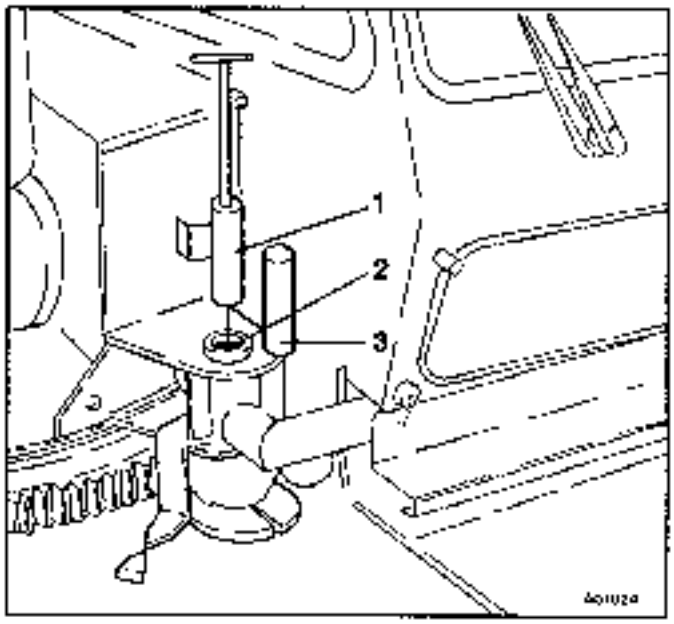

- Remove pin (1) from the locking device (2) and insert the pin in the holder (3).

4.3.11 Switching on the battery master switch

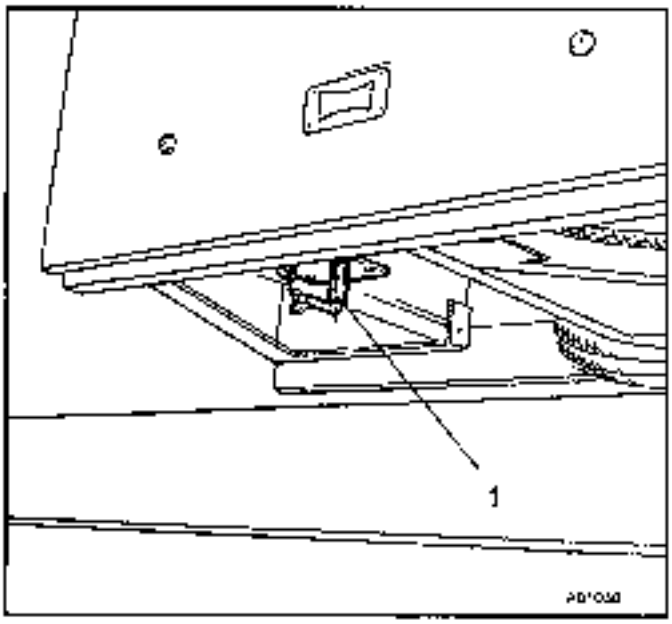

The battery master switch (1) for the superstructure's electric power supply is on the right-hand side of the turntable underneath the rear cover plate.

https://www.besttruckmanuals.com/

4.3.12 Adjusting the crane operator's seat

Adjust the hydraulic suspension of the crane operator's seat to suit your height and weight. The height of the seat, the angle of both seat and back rest and the stiffness of the suspension are all adjustable. The height and angle of the headrest are also adjustable.

4.3.13 Switching on the ignition

Push the ignition key (3) into the combined lighting and ignition switch as far as it will go and turn it to position 1

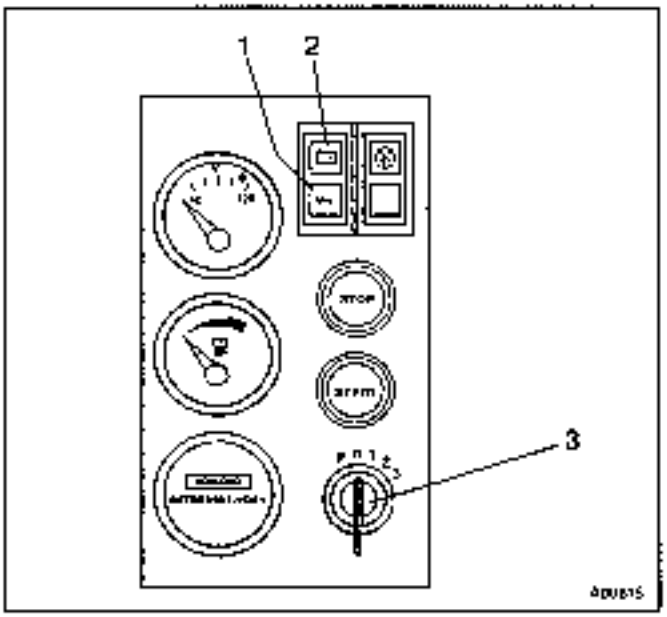

The following indicator lamps must be on: charge indicator lamp (2) and engine oil pressure (1)

https://www.besttruckmanuals.com/

4.3.14 Starting the crane engine

Mercedes Benz's operating instructions supplied with these operating instructions apply with regard to the engine.

In very cold weather you can help the crane engine to start more easily by preheating the cooling water with the additional water heating system (optional equipment). How to operate the additional heating system is described in Section 4.2.3 "Additional water heating system".

Starting the engine from cold in temperatures above -15 °C (5°F)

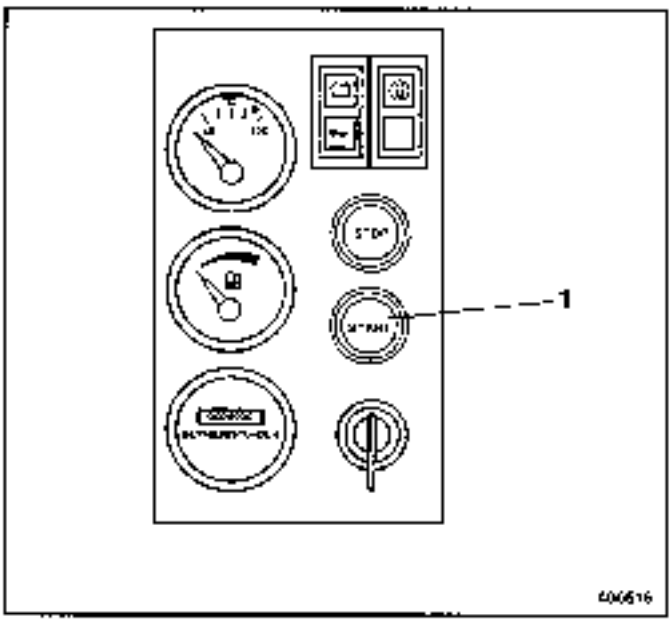

- Press the accelerator approx. 1/4 of the way.
- Press the starter button (1) as far as it will go.
- Release the accelerator when the engine has started.
- If the engine has not started after 15 seconds, stop the starting procedure and wait one minute before making a new attempt to start it.

Starting the warm engine

- Do not press the accelerator.
- Press the starter button as far as it will go.

https://www.besttruckmanuals.com/

4.3.15 Starting the crane engine with starter spray (optional equipment)

In temperatures below -15°C (5°F) when the engine is cold it must be started with starter spray.

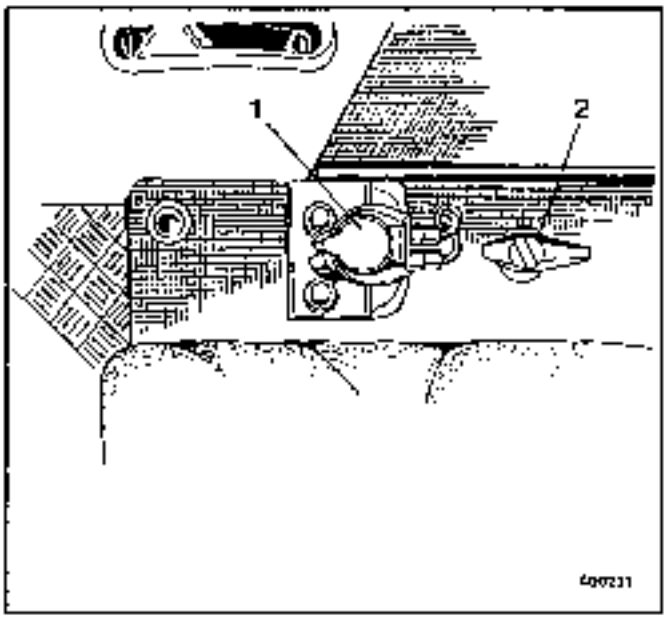

- Open the lid of the reservoir (1) and press the filler valve of an original bottle "F" onto the filler valve on the reservoir.
- Fill the reservoir with starter fuel up to the maximum mark and close the lid of the reservoir.
- Replace the cap on the starter spray bottle immediately.
- Start the engine as described in Section 4.3.15 and operate the starter spray pump (2) (1 to 2 strokes per sec.) while doing so.

Danger:

The starter fuel is highly flammable and must not be subjected to temperatures of over 50°C (122°F) for long periods. Store the starter spray bottles in a cool place in warm weather.

When the engine is warm it must never be started with starter spray or it may **explode**.

https://www.besttruckmanuals.com/

4.3.16 Engine is running - checking the instruments

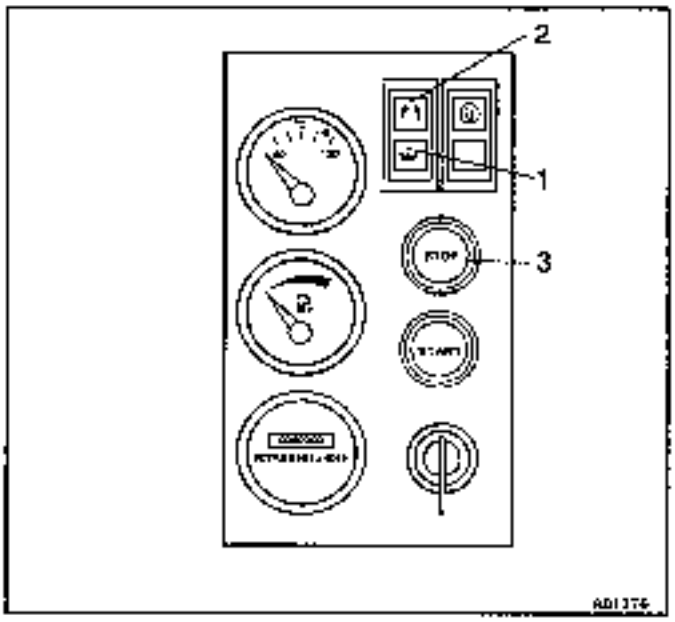

- As soon as the engine has started check the oil pressure indicator lamp (1)
- Press the "stop engine" button (3) if the indicator lamp does not go out.
- Check the compressed air supply. When there is sufficient compressed air in the system the speed of the superstructure engine will increase when you press the accelerator.

Caution: The following indicator lamps must go out when the engine is running:

engine oil pressure (1), battery charge indicator (2).

4.3.17 Refuelling

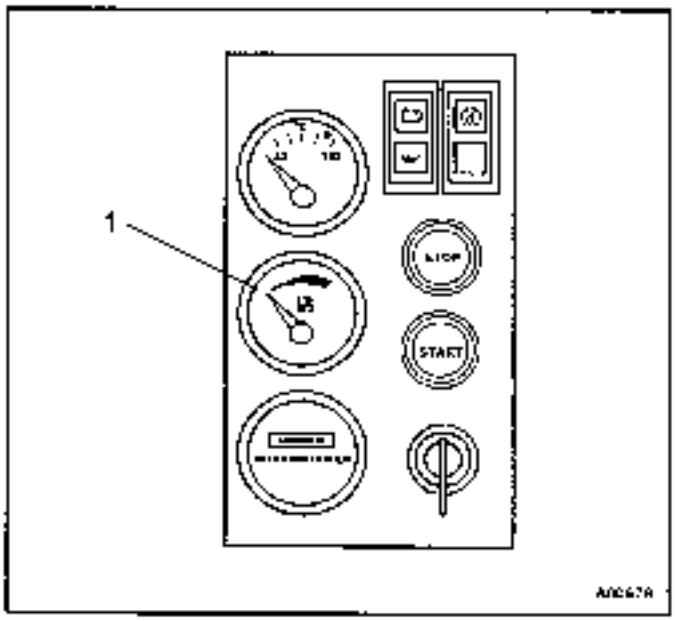

Check the fuel gauge (1) at regular intervals.

Never run the crane's fuel tank completely empty, i.e. fill in diesel in good time.

https://www.besttruckmanuals.com/

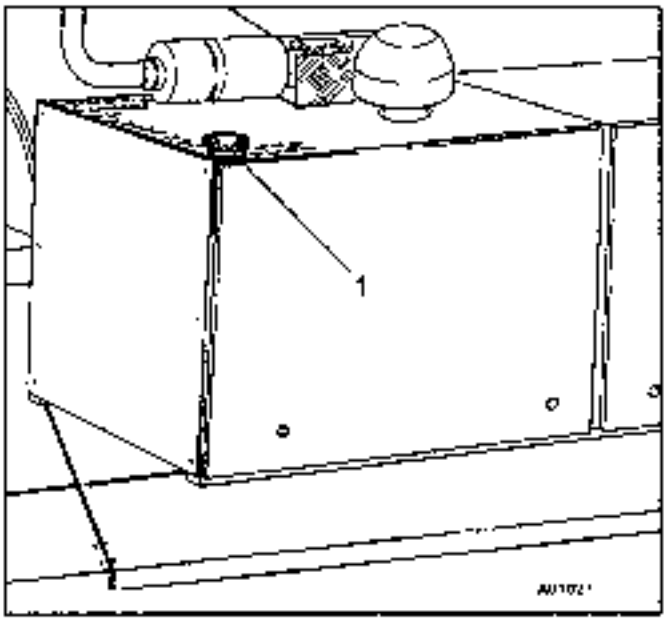

The oil filler neck of the fuel tank for the crane engine is on the right-hand side of the turntable.

Note: When filling up the tank always use a funnel with a filter.

Note: The additional water heating system (optional equipment) runs on fuel from the fuel tank for the crane engine.

Caution: The fuel specification is given in Mercedes Benz's operating instructions for the crane engine which are supplied with these operating instructions

https://www.besttruckmanuals.com/

4.4 Operating the crane with/without outriggers

4.4.1 Operating mode with outriggers

- The suspension system must be locked.
- The outrigger pad loads must be spread by extra packing so that the outrigger pressures occurring during the planned crane operation do not exceed the load-bearing capacity of the ground under any circumstances.
- When the crane is supported with the outriggers all four outrigger beams must be extended to the span stipulated in the lifting capacity tables
- All wheels must be off the ground.
- The lifting capacity tables "truck crane supported by outriggers" are applicable.
- Set the SLI for the appropriate operating mode as stipulated in the lifting capacity tables.
- The slewing range of the superstructure is 360 degrees except where restrictions are stated in the lifting capacity tables.

Note: For working with the boom at the rear of the crane (0° position) the superstructure has to be locked in place with the locking pin.

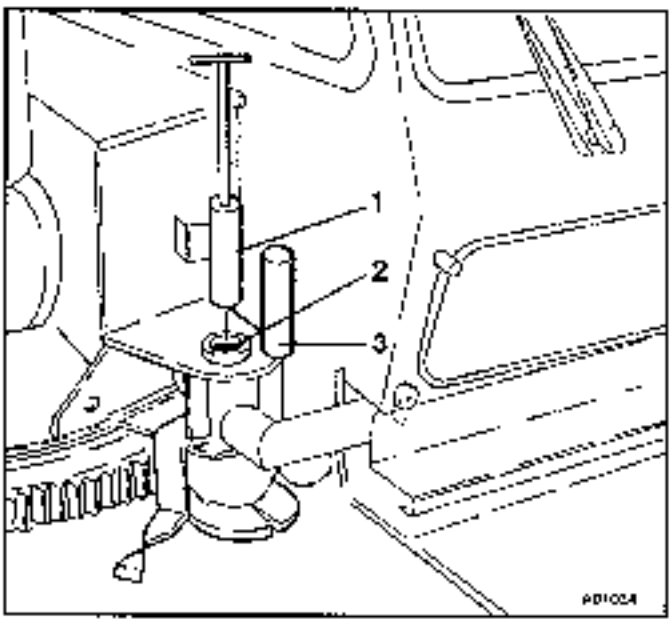

- Remove the pin (1) from the holder (3) and insert the pin in the locking device (2).

https://www.besttruckmanuals.com/

4.5 External influences while working with the crane

4.5.1 Preheating the hydraulic oil

When the truck crane is used in the winter particular attention must be paid to the following points:

In temperatures below 0°C (32°F) the hydraulic oil must be preheated before starting work with the crane.

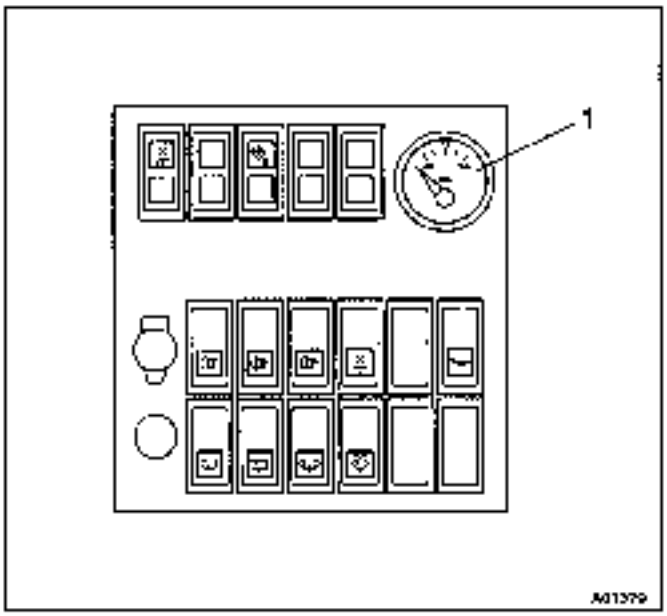

Run the engine at average speed and carry out one of the crane functions - e.g. retracting a telescope section which is already retracted - against the end position until temperature gauge (1) shows an oil temperature of 10°C (50°F).

Depending on the outside temperature, preheating takes up to 10 minutes.

After preheating the oil carry out all crane functions at least twice to displace the cold oil from all parts of the hydraulic system.

Solenoid valves which are still too cold to be switched automatically should be operated with the manual emergency button.

https://www.besttruckmanuals.com/

4.5.2 Cooling the hydraulic oil

During normal crane operation the temperature of the oil should not exceed 70°C (158°F)

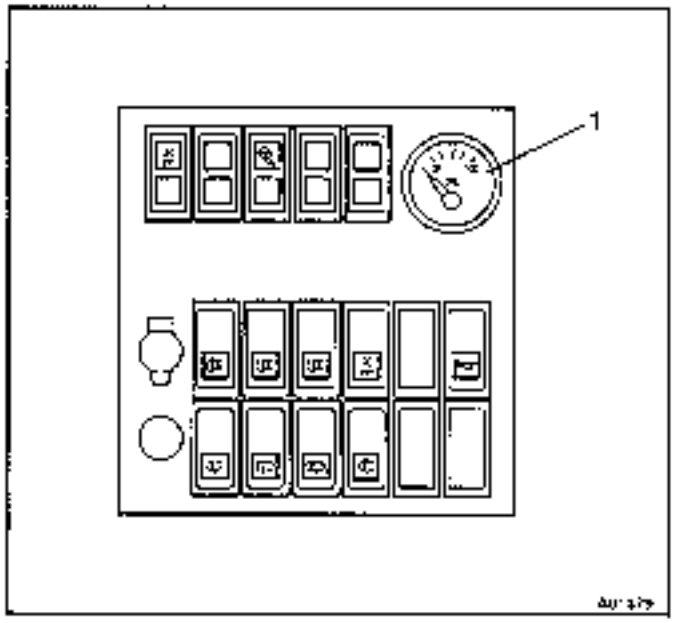

- While you are working with the crane check the hydraulic oil temperature gauge (1) regularly.
- If the temperature of the hydraulic oil reaches 80°C (176°F) work must be stopped and the oil allowed to cool down with the pump idling.

Cooling the hydraulic oil with an oil cooler (optional equipment)

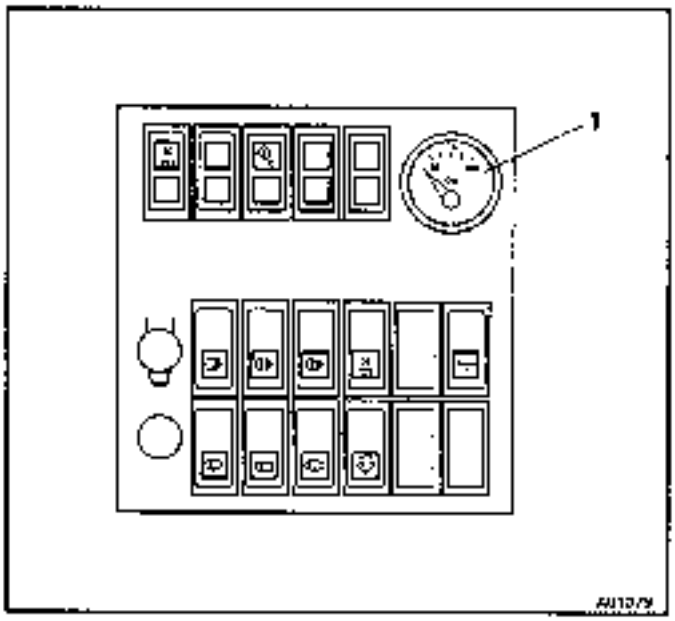

- Check the hydraulic oil temperature gauge (1) regularly while you are working with the crane.

The oil cooler is controlled by a thermostat It switches on when the oil reaches 40°C (104°F)

https://www.besttruckmanuals.com/

4.5.3 Wind

Strong winds can overload the crane (please see Section 2.4.9"Effect of wind on crane operations").

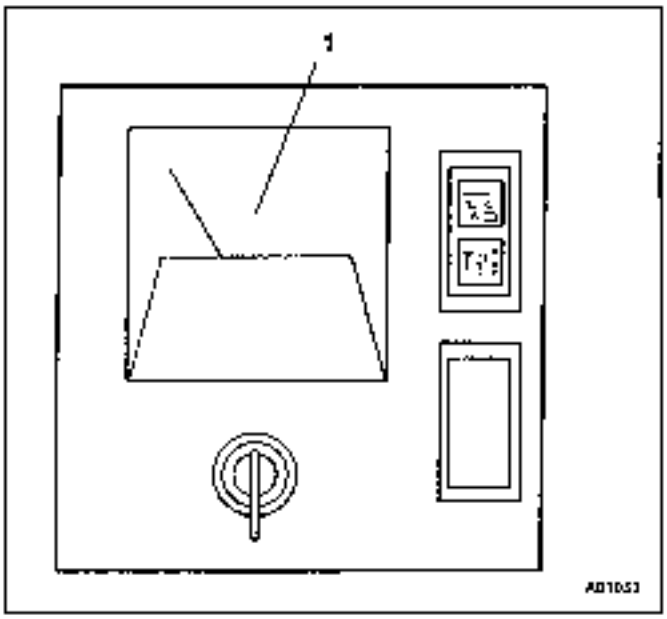

Check the wind speed continually on the anemometer (1) while you are working with the crane

Maximum permissible wind speed with the crane fully loaded

The maximum permissible wind speed is listed in the lifting capacity tables.

Maximum permissible wind load

The maximum wind surface of the load must not be greater than 1 m^2 per tonne (10.8 ft^2/lbs = 1 m^2/t) of lifting capacity (please see Section 2.4.9 "Effect of wind on crane operations").

4.5.4 Hand signals

If you are unable to see the load all the time while you are working with the crane you must work with a banksman.

If you do not use walkie-talkies the banksman must understand the correct signal code (please see Section 2.4.3 "Hand signals for the banksman")

https://www.besttruckmanuals.com/

4.6 Operating the crane

4.6.1 Picking up the hook block

For driving on roads the hook block is hung in the front coupling on the carrier or is placed in the holder in front of the crane operator's cab.

Caution: Do not let the hoist rope out too much. If the rope slackens loops will be formed on the hoist drum, resulting in the load slipping during operation and destruction of the rope

Hook block in the front coupling

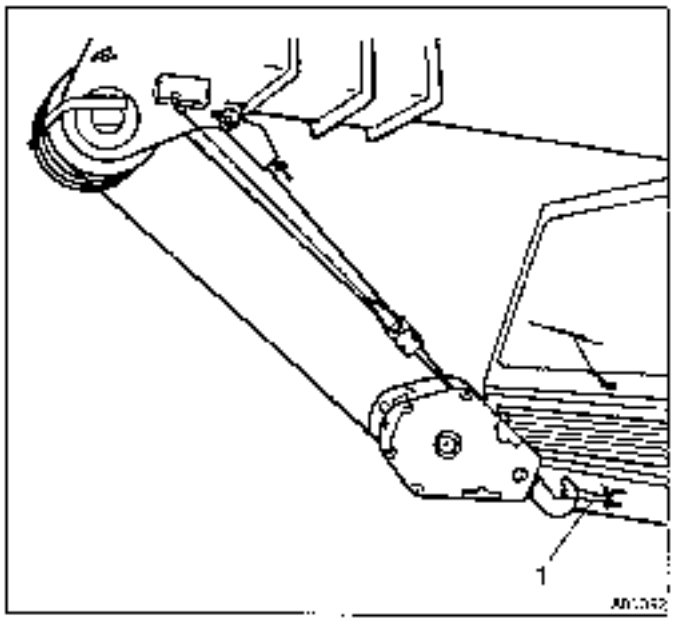

- Raise the boom until the head of the boom is above the front coupling
- Pay out the hoist rope at the same time.
- Detach the hook block from the endless rope (**1**).

Caution: You can not see the hook block from the crane operator's cab and it may knock against the crane driver's cab so work with a banksman.

https://www.besttruckmanuals.com/

Hook block in holder

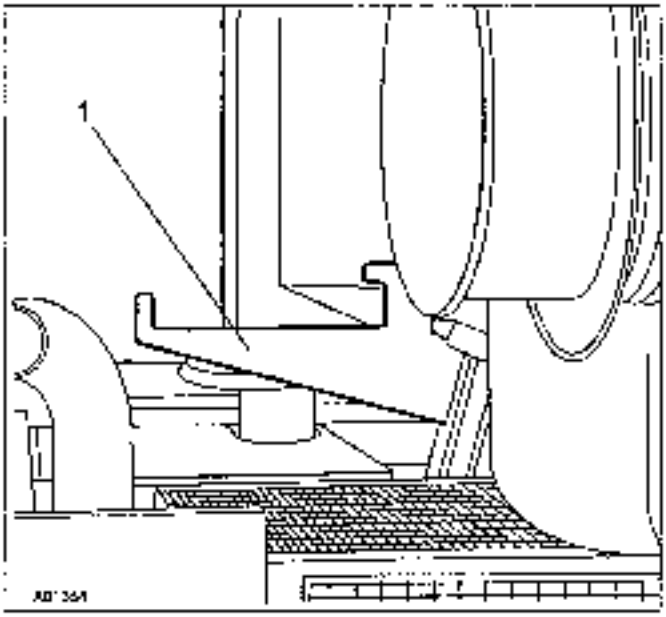

- Check that all the falls of the hoist rope are lying in the rope holder. If any of the falls are not lying in the rope holder they will catch on it when the boom is raised.

- Raise the boom until the head of the boom is above the hook block. The rope falls are lifted off the rope holder.

- If necessary pay out the hoist rope a little, but ensure that the rope does not slacken.

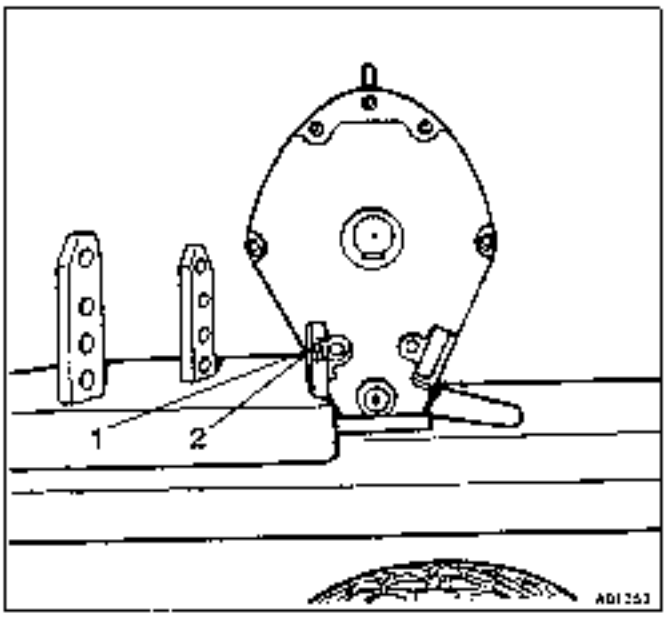

- Remove the retaining pin (1) and pull out the rod (2).

- Lift the hook block out of the holder.

Caution: Ensure that there are no persons near the hook block when you lift the hook block out of the holder otherwise **accidents may occur.**

https://www.besttruckmanuals.com/

- Fold the holder down so that it is lying flat on the carrier.

Caution: The hook block holder is in the superstructure's slewing area. If you do not fold the holder down you will damage it when you slew the superstructure.

Putting down the hook block

Whether the hook block has to be in the front coupling or in the holder for transport is stipulated in Section 8.2.18"Weights".

Putting down the hook block is the reverse of picking it up. The notes on safety in the section on picking up the hook block also apply for putting it down..

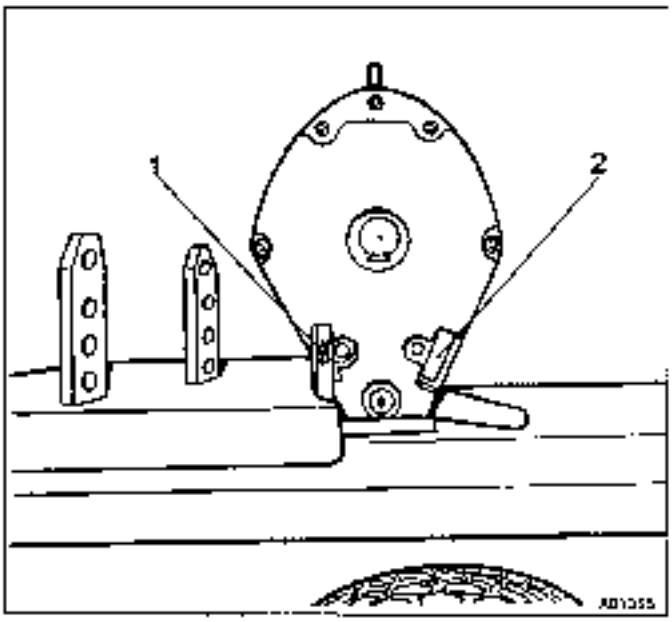

Holding rod (1)

Hole for handling hook block (2)

Caution: Insert the holding rod (1) through the holes for handling the hook block (2) to secure the hook block in the holder during transport

Hook blocks which are narrower than the holder must be secured so that they are held securely in the holder (e.g. wedge them in or insert packing) otherwise accidents may occur.

https://www.besttruckmanuals.com/

4.6.2 Reeving the hoist rope

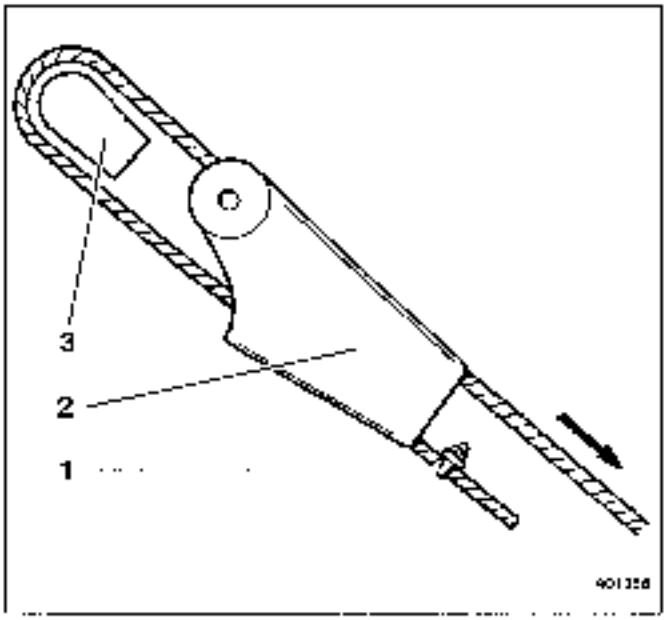

- Place the hoist rope with the rope wedge (**3**) in the rope end clamp (**2**).
- Attach a rope clamp (**1**) to the free end of the rope
- Pull the end of the rope tight.

The hoist rope can be reeved with a different number of falls depending on the required lifting capacity (please see Section 4.6.3 "Reeving modes").

With an even number of falls the rope end clamp is fixed to the boom head and with an odd number of falls to the hook block.

Note: The rope end clamp does not have to be removed from the hoist rope to reeve the rope.

https://www.besttruckmanuals.com/

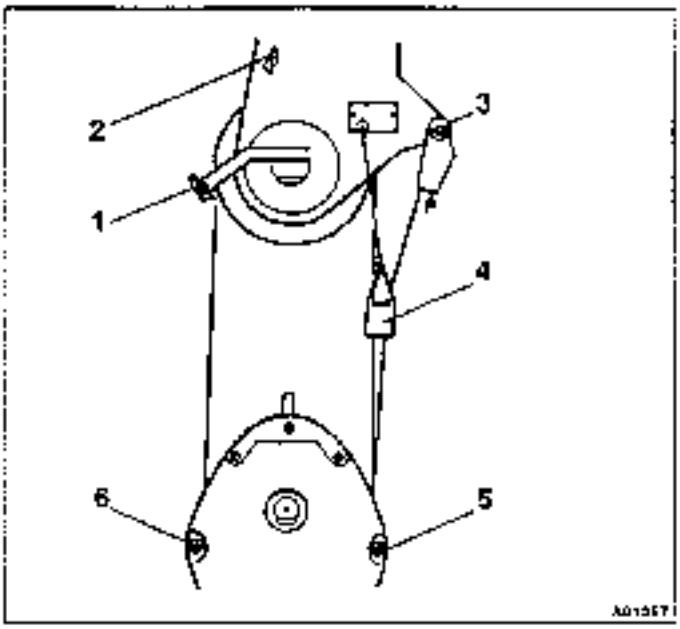

- Pull out the rope holding rods (1) and (2) on the head of the boom
- Pull the holding rods (5) and (6) out of the rope guards on the hook block, releasing the spring cotters.
- Fold the rope guards on the hook block down

- When reeving, insert the rope from the outermost sheave on the boom head from the front into the hook block.
- Pass the end of the rope from behind over the next sheave used on the boom head, etc.
- Fix the rope end clamp with the pin (3) to the hoist rope attachment plate on the head of the boom or hook block. Secure the pin with a retaining pin.
- The last upward line of the hoist rope must be passed through the bore in the lifting limit switch weight (4). Remove the bolts in the lifting limit switch weight and insert the rope.

https://www.besttruckmanuals.com/

4.6.3 Reeving modes

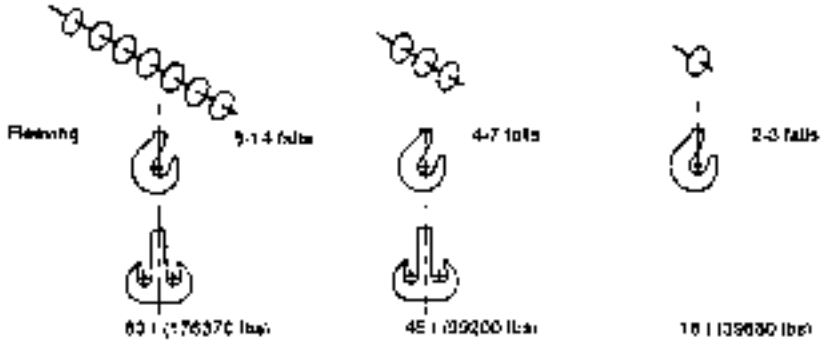

Reeving on boom with additional sheave (*)

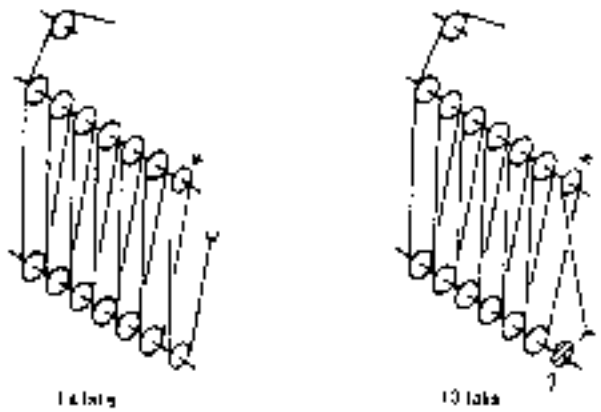

Reeving on boom without additional sheave

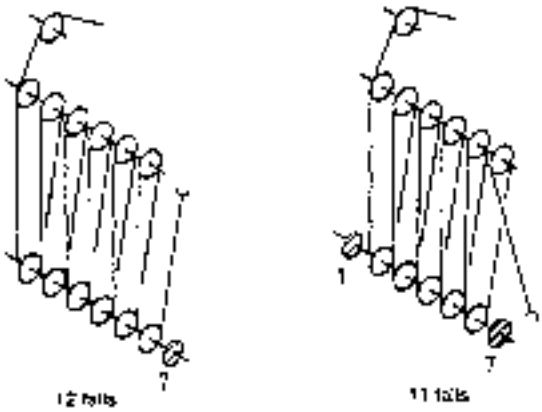

Reeving on boom without additional sheave

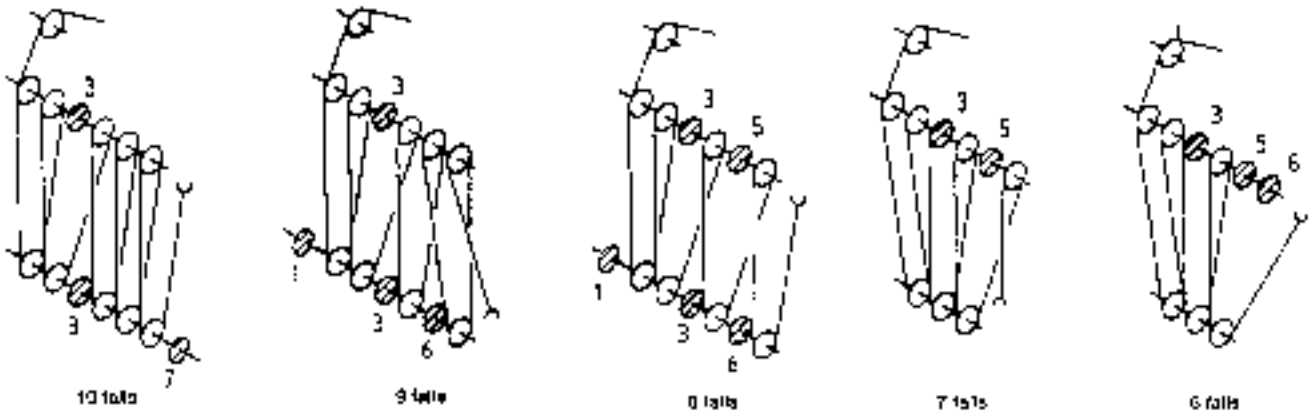

Reeving on boom without additional sheave

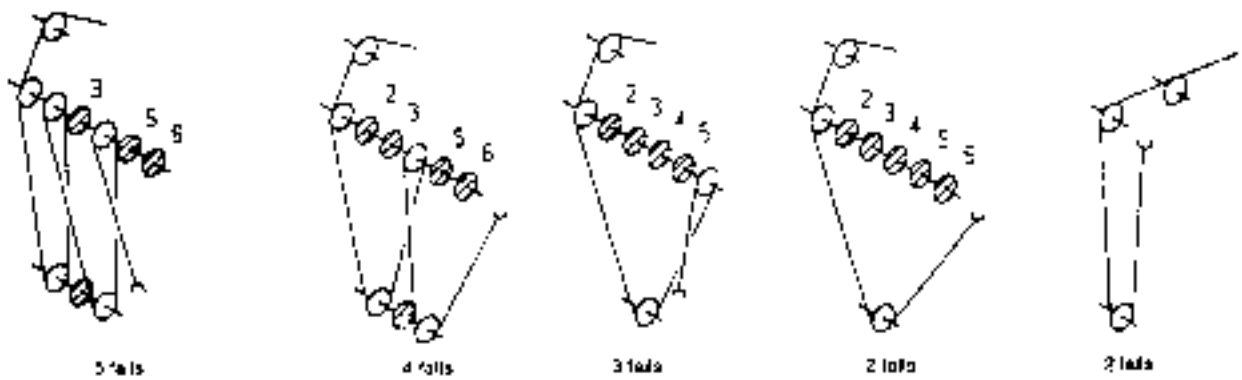

https://www.besttruckmanuals.com/

4.6.4 Counterweights

Depending on the other equipment which is installed on the crane some of the counterweight sections can be transported on the truck crane when it is driven on roads. These counterweight sections are mounted on the superstructure and/or have to be placed on the counterweight platform on the carrier. The other counterweight sections have to be transported to the site on another vehicle.

Where the counterweight sections have to be when the truck crane is driven on roads is listed in Section 8.2.18 'Weights'.

The parts of the counterweight can be assembled to form two different counterweights.

Danger: The only counterweight versions which are permitted to be used are the 10.0 t (22 050 lbs) and 14.8 t (32 600 lbs) counterweights.

10.0-t (22 050 lbs) counterweight

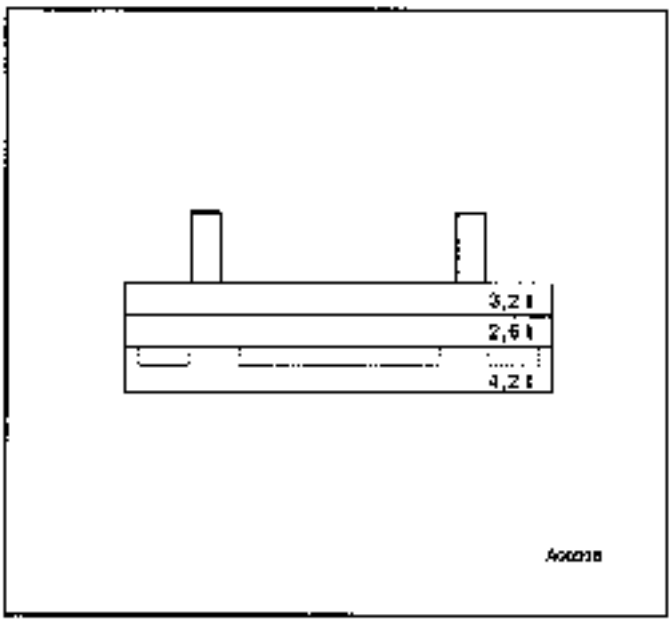

Which order the 2.6 t (5730 lbs) and 3.2 t (7050 lbs) sections are stacked in depends on which section can remain fixed to the superstructure for driving on roads (please see Section 8.2.18"Weights").

https://www.besttruckmanuals.com/

14.8-t counterweight

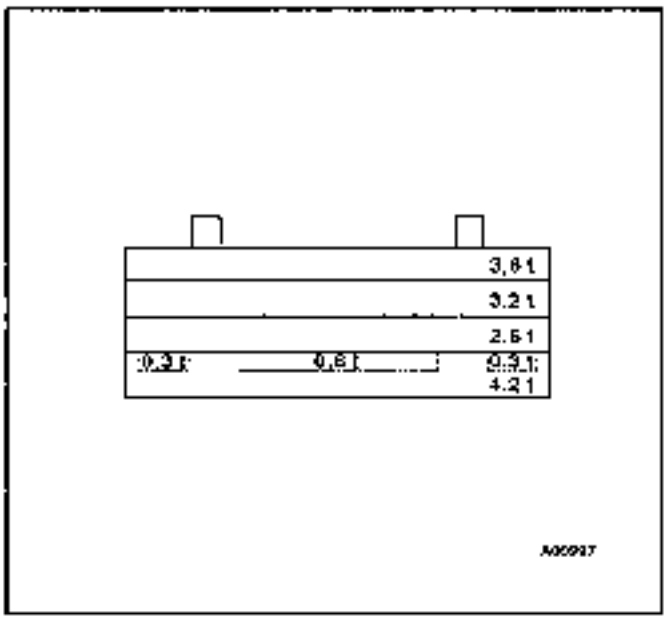

Which order the top three sections are stacked in depends on which section can remain fixed to the superstructure for driving on roads (please see Section 8.2.18 "Weights").

Danger:

The 2 x 0.3-t (2 x 660 lbs) and 1 x 0.6-t (1320 lbs) inserted sections have to be bolted to the 4.2-t (9250 lbs) basic counterweight.

Picking up the counterweight (14.8 t) (32 600 lbs)

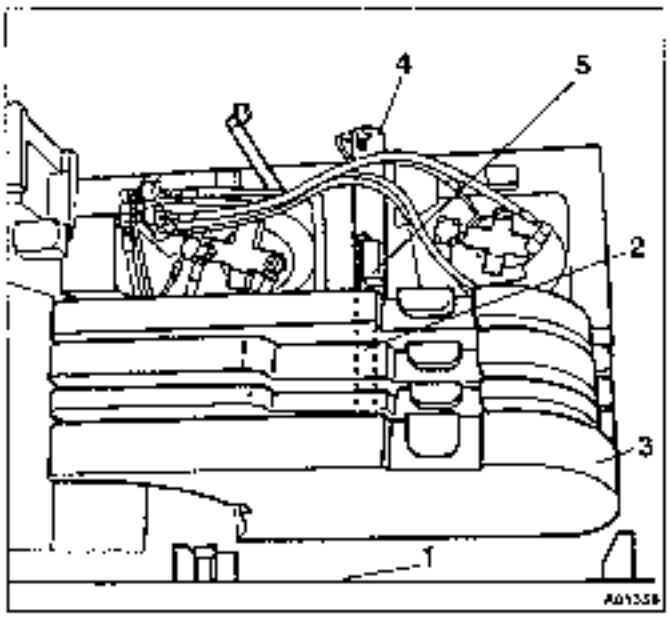

The counterweight sections are stacked with the truck crane on the counterweight platform (1) on the carrier, placing the counterweight sections over the lifting rods (2) on the basic counterweight (3) and bolting them in place. The superstructure is then slewed to the rear of the truck crane. The complete counterweight is raised with the counterweight lifting cylinders (4) and bolted to the superstructure. The lifting cylinders are controlled from a removable control unit (5).

Caution:

The outriggers must be extended and the suspension must be locked when picking up and putting down the counterweight (please see Section 4.3.4 "Outriggers").

https://www.besttruckmanuals.com/

- Set the code for the lifting capacity table "crane without a counterweight" on the SLI (please see Section 4.6.5 "Safe Load Indicator (SLI)"). The SLI code is listed in the lifting capacity tables.

Danger: Always set the code for "crane without a counterweight" even if parts of the counterweight are still installed on the superstructure after the truck crane has been driven on roads. If any other operating mode is set the crane may **overturn**.

Danger: Ensure that the lifting tackle which is used to pick up the counterweight sections has a sufficient load bearing capacity
Only attach the lifting tackle at the correct attachment points.

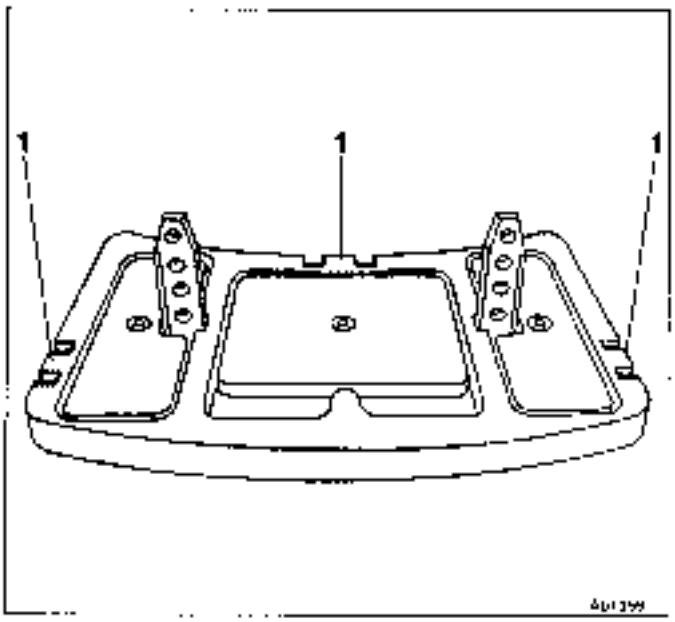

- There are three hooks (**1**) on the counterweight sections for attaching the counterweight sections.

Danger: Only one counterweight section may be lifted at a time. The hooks (**1**) are not designed for lifting sections which are stacked on each other. **Accidents** will occur if this is not observed.

https://www.besttruckmanuals.com/

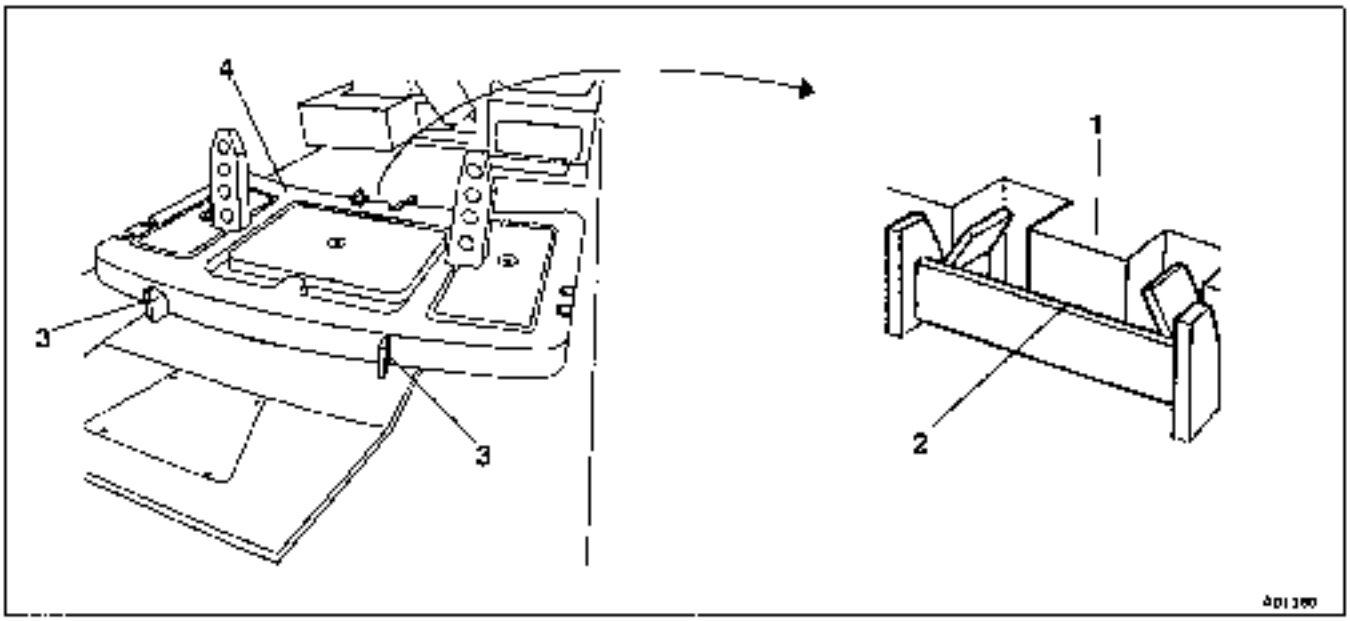

- Lift the basic 4.2-t (9250 lbs) counterweight (**4**) onto the counterweight platform between the guides (3) and (2).

Caution: Ensure that the lifting tackle on the hook (1) is not damaged by the guide (**2**).

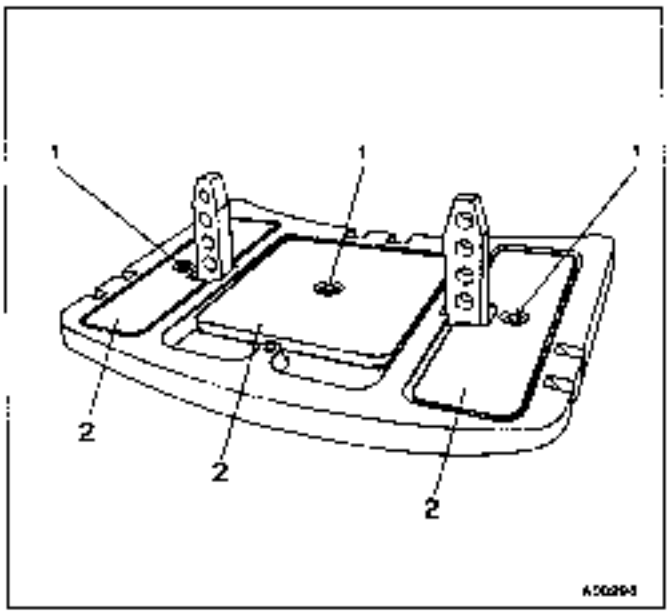

- Insert the 2 x 0.3-t (2 x 660 lbs) and 1 x 0.6-t (1 x 1320 lbs) counterweight sections (**2**) into the basic counterweight.
  Unscrew the ring bolt from the hole (1) and bolt each of the inserted counterweight sections to the basic counterweight section with one bolt.

Note: The basic counterweight can be lifted together with the inserted counterweight sections.

https://www.besttruckmanuals.com/

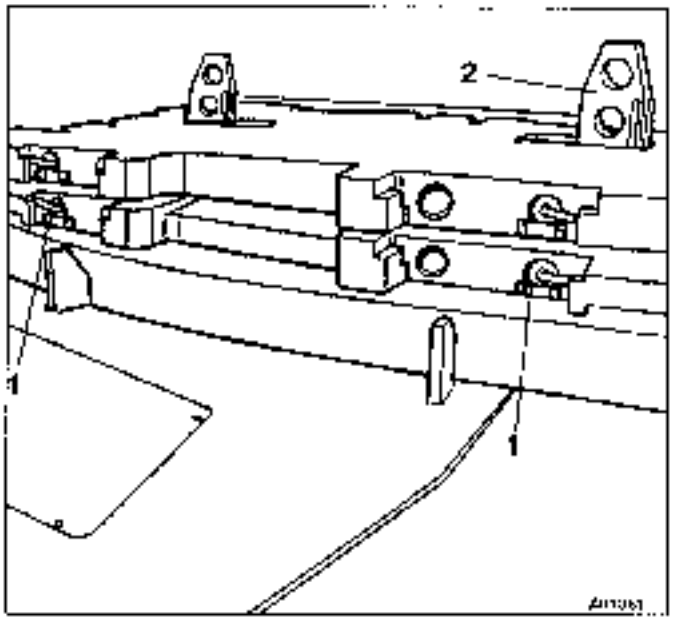

- Pull the outer locking pins (1) out as far as they will go before you stack the counterweight sections on the basic counterweight over the lifting rods
- Push the locking pins back in again when the counterweight sections have been placed on the basic counterweight.
  Turn the handles of the pins into the pockets so that they can not slip out.

Note: The counterweight which was allowed to stay on the superstructure during driving is left on the superstructure during the steps described above and is lowered onto the stacked counterweight sections just before the whole counterweight is raised.

If you plan to drive the truck crane with other equipment installed next time you move sites you should look up the counterweight which can be left on the superstructure in section 8.2.16 "Weights" so that you can stack the counterweight sections in the right order.

https://www.besttruckmanuals.com/

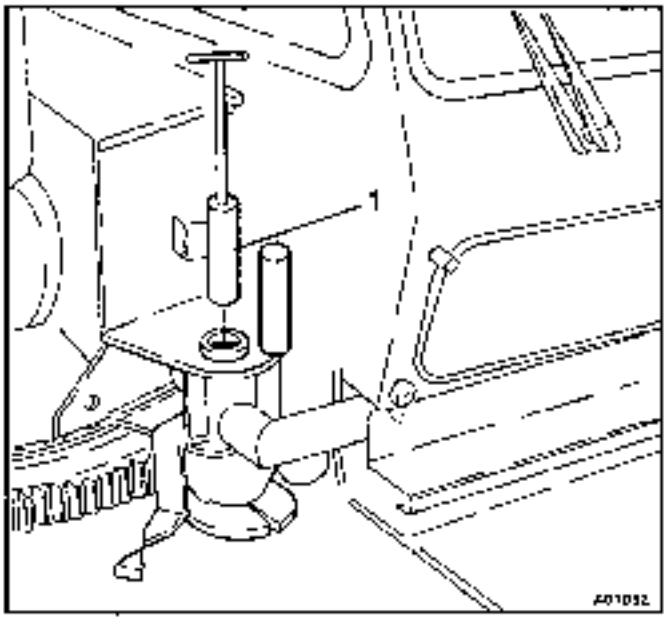

- Turn the superstructure to the rear of the truck crane.
- Lock the superstructure with the pin (1).

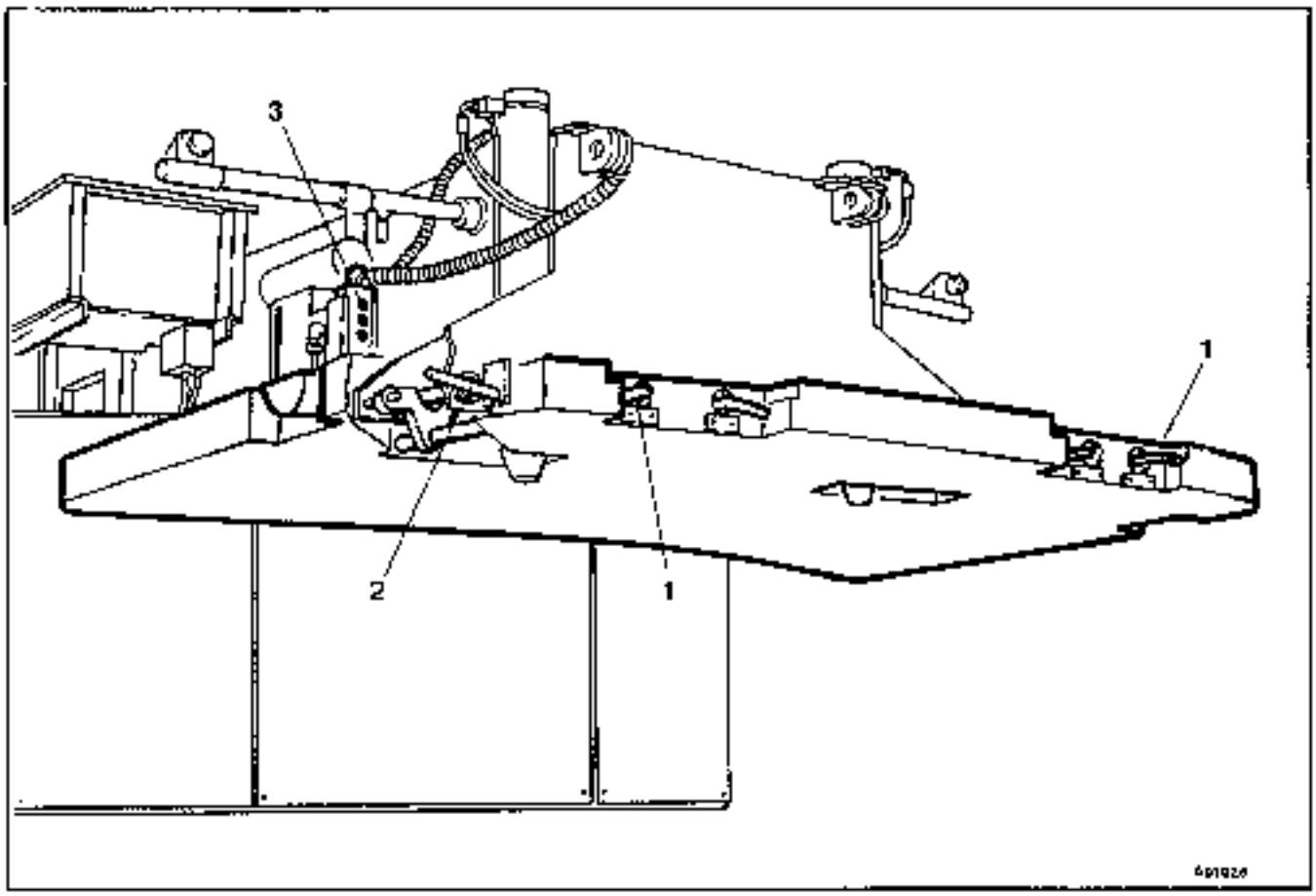

- Remove the two pins (2).
- Pull the two outer locking pins (1) out as far as they will go. If necessary raise the counterweight slightly with the lifting cylinders (press push button (3)).

https://www.besttruckmanuals.com/

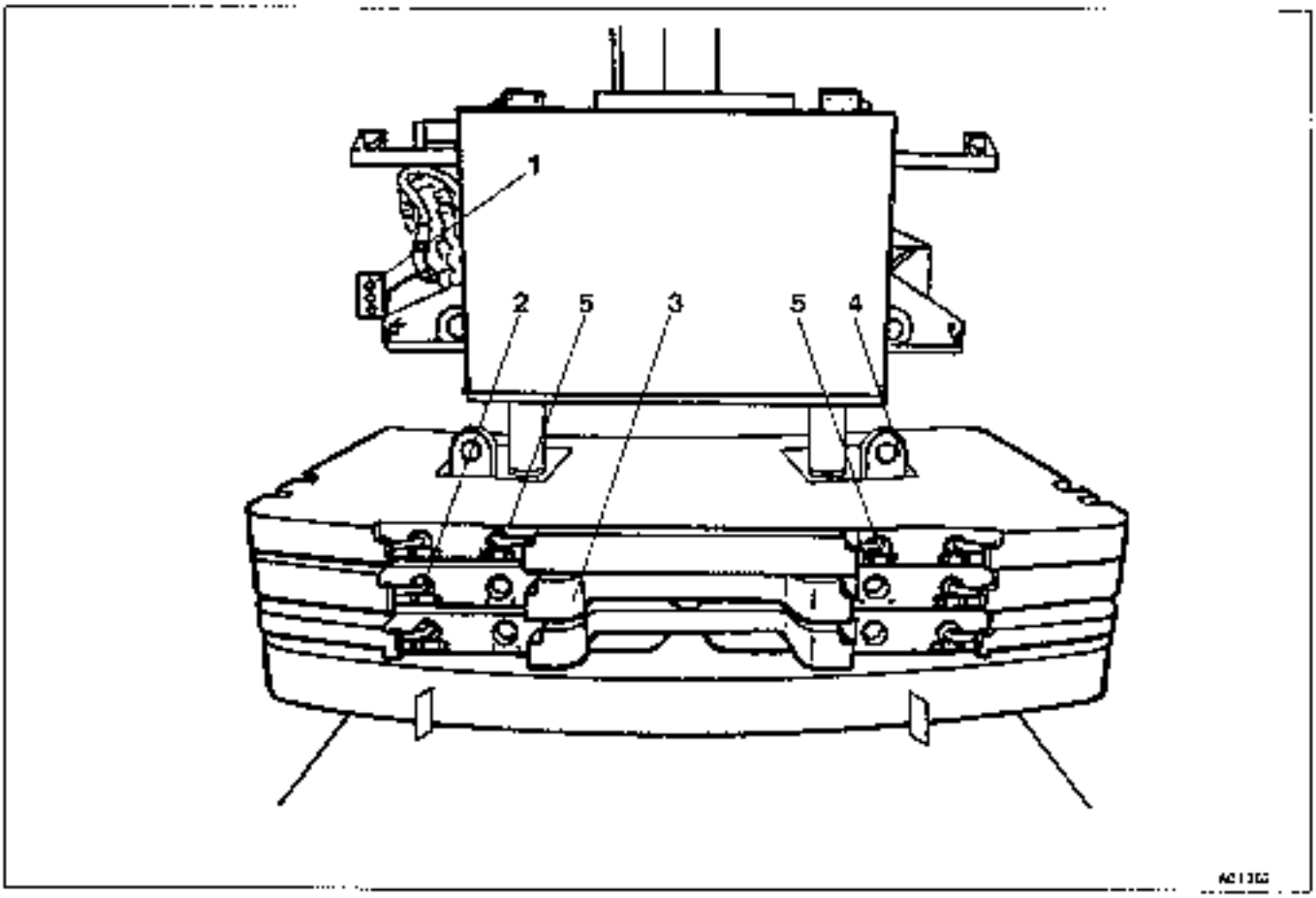

- Lower the counterweight section (3) onto the counterweight sections on the carrier by pressing push button (1).

- Fix the counterweight section (3) to the lifting rods (4) with the two outer locking pins (2). Turn the handles of the pins into the pockets so that they can not slip out.

Note: If there was no counterweight on the superstructure during driving the top counterweight section must be fixed to the lifting cylinder with the inner pins (5). Turn the handles of the pins into the pockets

https://www.besttruckmanuals.com/

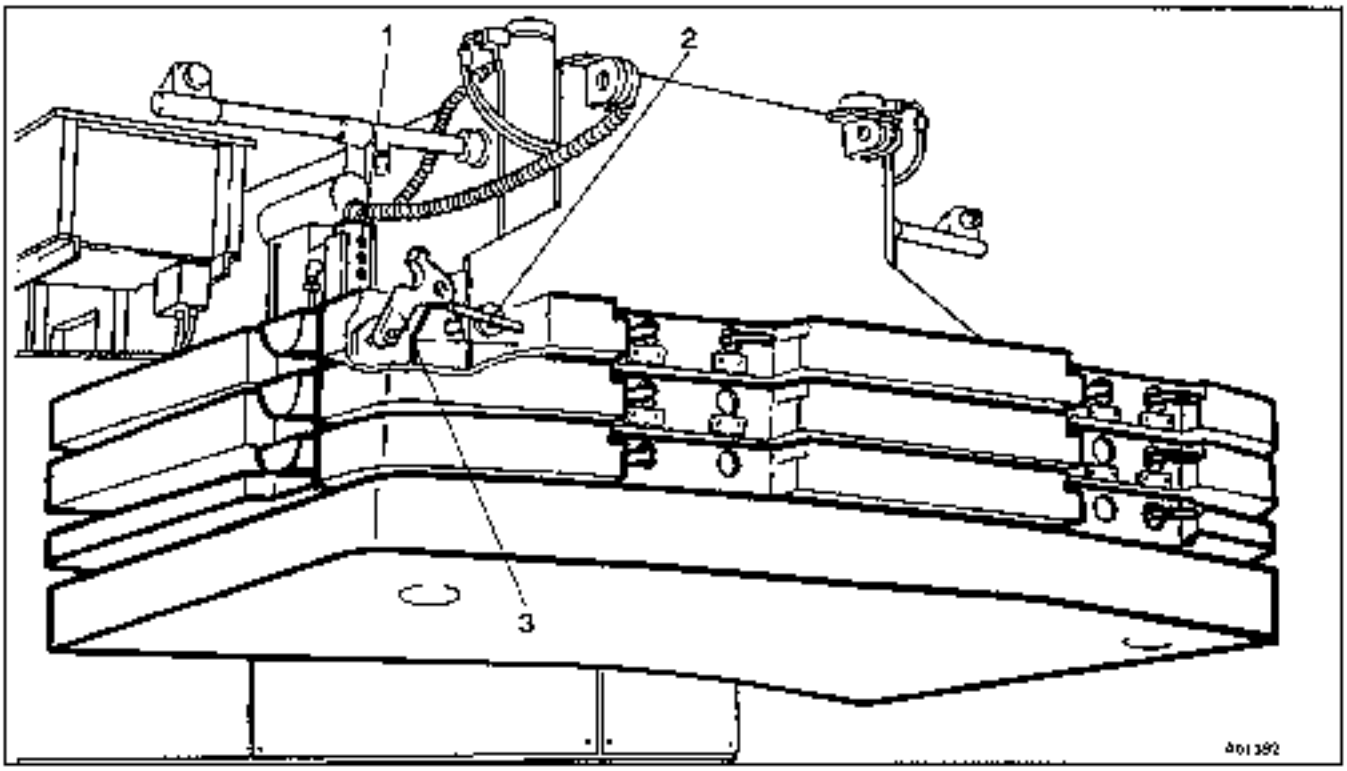

- Raise the whole counterweight as far as it will go, pressing push button (**1**). The pivoting plates (**3**) are raised by the lifting rods.

- Insert the two pins (**2**) into the bores

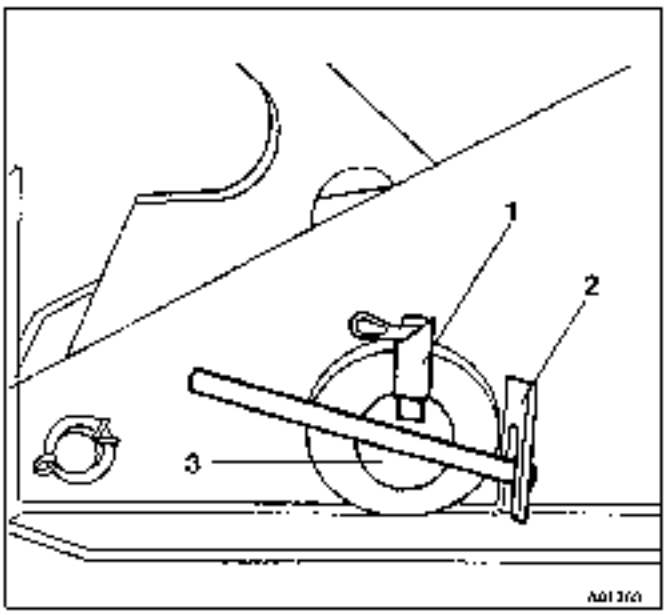

- Secure the pins. Turn the pins so that the extension to the handle is inside the pocket (**2**). Turn the lever on the catch (**1**) so that the catch secures the pin at the bottom.

Danger:

Always insert and secure the pins (3) when you install the counterweight. The pins (3) attach the counterweight to the superstructure. If the counterweight is only suspended with the hydraulic lifting cylinders it can fall to the ground if there is a failure in the hydraulic system (e.g. if a hose bursts) and **accidents will occur**.

- Release the mechanical lock locking the superstructure.

https://www.besttruckmanuals.com/

Picking up the counterweight (10.0 t) (22 050 lbs)

The 10.0-t (22 050 lbs) counterweight is picked up in the same way as the 14.8-t (32 600 lbs) counterweight. How the counterweight sections are combined for the 10.0-t (22 050 lbs) counterweight is listed at the beginning of this section.

Danger: Please read all the notes on safety in Section "Picking up the counterweight (14.8 t) (32 600 lbs)"

Putting down the counterweight

Both counterweight versions are put down in the same way.

Danger: Please read all the notes on safety in Section "Picking up the counterweight (14.8 t) (32 600 lbs).

Where the counterweight sections have to be when the truck crane is driven on roads is listed in Section 8.2.18 "Weights".

Caution: The truck crane must be supported with the outriggers and the suspension must be locked before the counterweight is put down (please see Section 4.3.4 "Outriggers").

- Turn the superstructure to the rear of the truck crane and lock the superstructure with the mechanical lock.
- Set the code for the lifting capacity table "crane without a counterweight" on the SLI (please see Section 4.6.5 "Safe Load Indicator (SLI)). The SLI code is listed in the lifting capacity tables

https://www.besttruckmanuals.com/

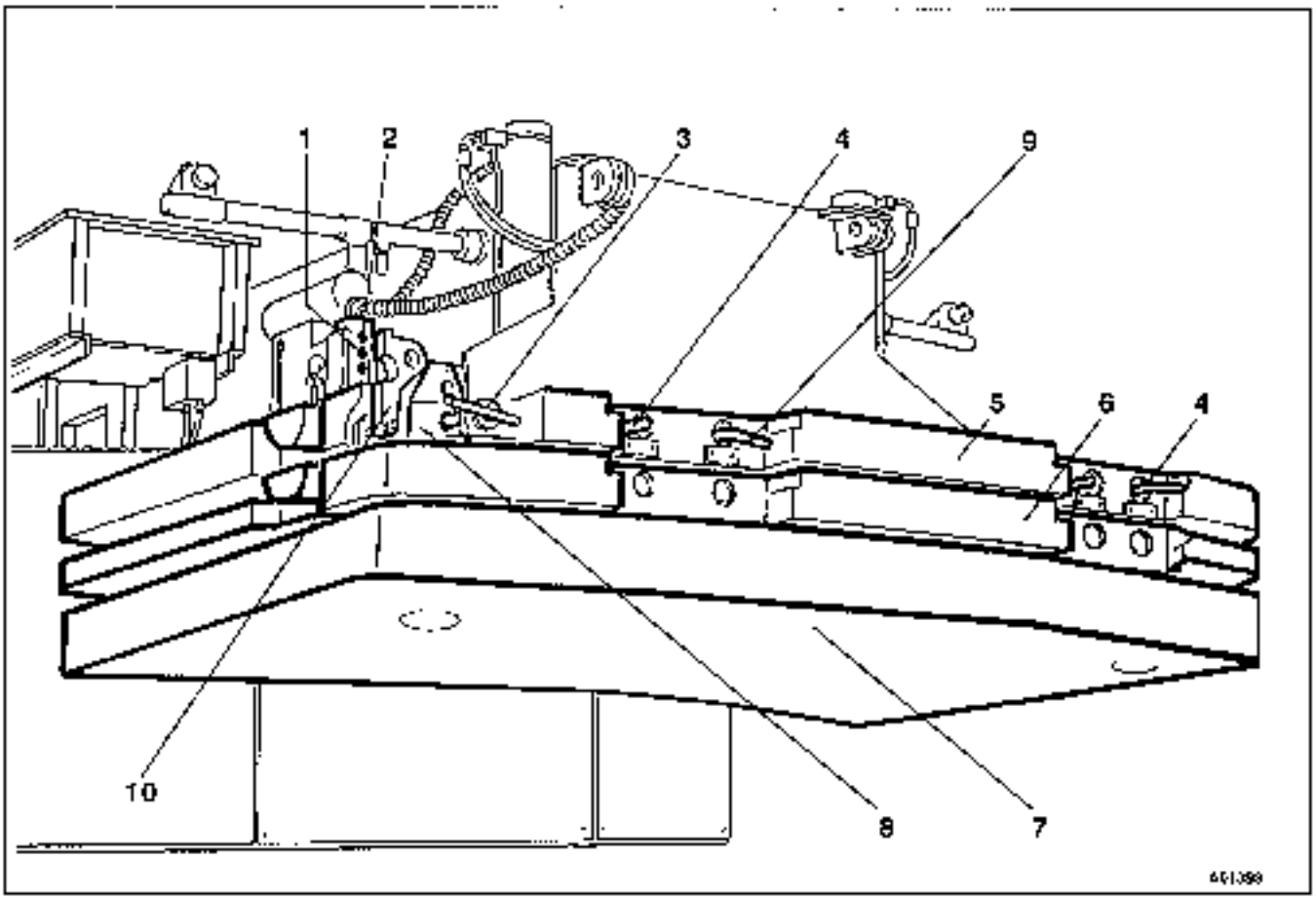

- Remove pin (3). If necessary raise the counterweight slightly (push button (2)).
- Place the counterweight on the counterweight platform on the carrier (push button (1)).
- Pull out the outer pins (4) on all counterweight sections.
- Raise the top counterweight section back up to the superstructure.

Note: The counterweight section which can be left on the superstructure when the crane is driven on roads has to be on top (please see Section 8.2.1B "Weights").

- Secure the counterweight section on the superstructure for driving on roads. Fold the pivoting plates (10) inwards and reinsert the two pins (3). Secure the pins (3) so that they can not slip out.
- Release the mechanical lock locking the superstructure (remove the pin)
- Lift the counterweight sections off the carrier and onto the transport vehicle with the truck crane. Only one counterweight section may be lifted at a time. Ensure that they are lifted with suitable lifting tackle.

https://www.besttruckmanuals.com/

Changing the counterweight

If you have to change the counterweight to the other version while you are working, follow the steps below.

Danger: When picking up and putting down the counterweight please observe the notes on safety in Section "Picking up the counterweight (14.8 t) (32 600 lbs)

- The truck crane must be supported with the outriggers and the suspension must be locked.
- Turn the superstructure to the rear of the truck crane and lock the superstructure with the mechanical lock (insert the pin).
- Set the code for the lifting capacity table "crane without a counterweight" on the SLI (please see Section 4.6.5 'Safe Load Indicator (SLI)). The SLI code is listed in the lifting capacity tables.
- Lower the counterweight on to the counterweight platform.
- Release the mechanical lock locking the superstructure (remove the pin).
- Pick up the counterweight sections one at a time with the crane, removing the outer pins.

Danger: Do not lift all the counterweight sections off the basic counterweight at once. The hooks for attaching the lifting tackle are not designed for this and **accidents will occur** if this is not observed.

- Install or remove the inserted counterweight sections. When they are installed the ring bolts have to be replaced with fixing bolts.
- Place the counterweight sections back on the basic counterweight one by one, stacking them in the right order. The counterweight which can be left on the superstructure for driving has to be on top. How the counterweight versions are put together for the different versions is listed at the beginning of this section.
- Push the outer pins back in and secure them. Turn the handles into the pockets.
- Raise the counterweight up to the superstructure connecting the counterweight to the lifting cylinder by pushing in the inner pins on the top counterweight sections. Secure the pins by turning the handles into the pockets.
- Secure the counterweight which has been raised to the superstructure, inserting both pins on the right and left-hand side next to the pivoting plates. Turn the extensions to the pin handles into the pocket. Turn the levers on the catches so that the pins can not slip out of the bores.

https://www.besttruckmanuals.com/

4.6.5 Safe Load Indicator (SLI)

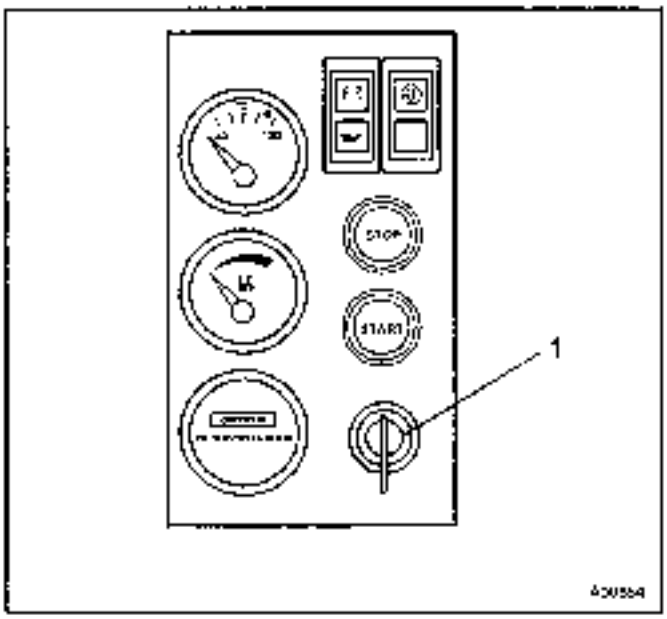

When the crane switch (1) is switched on the SLI is switched on at the same time.

Note: The SLI runs a test program during the first second after being switched on. During this period the acoustic signal sounds. This is repeated every time the power is switched on, e.g. if the engine is switched off and on again.

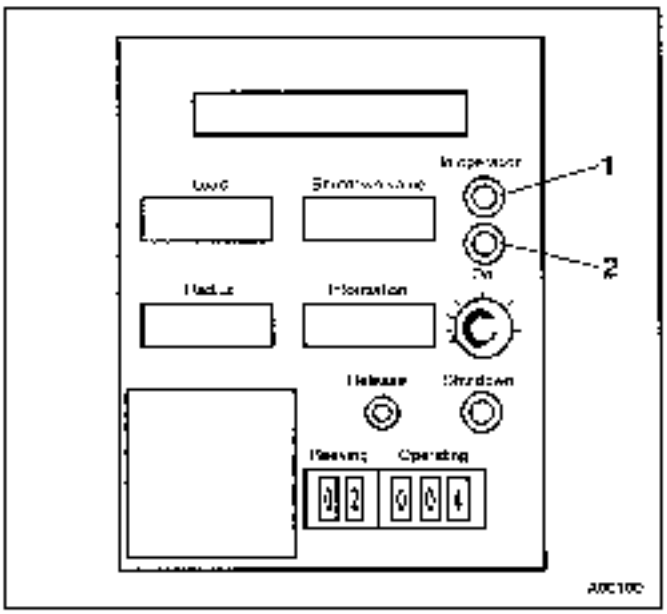

The indicator lamp "**power on**" (2) shows that the power supply is switched on. Indicator lamp (1) shows that the electronic system is functioning.

Caution: Both lamps must always be on while the crane is being used.

https://www.besttruckmanuals.com/

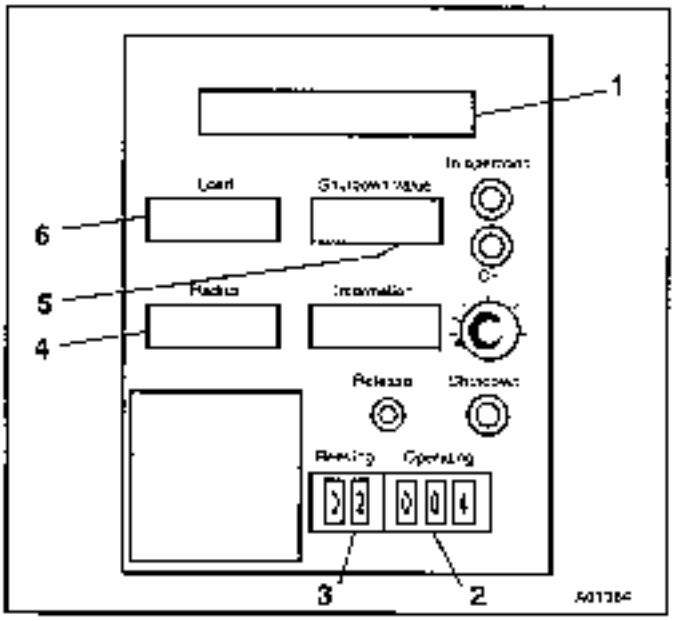

- Set the operating mode (SLI code) with the operating mode selector switch (2).
  The selected operating mode is shown on the status display (1).

  The SLI codes for the possible operating modes are listed in the **lifting capacity tables**

- Set the number of reeved hoist rope tails on the reeving selector switch (3).

Note: The reeving mode set on the SLI affects the shutdown value to prevent the hoist from being overloaded.

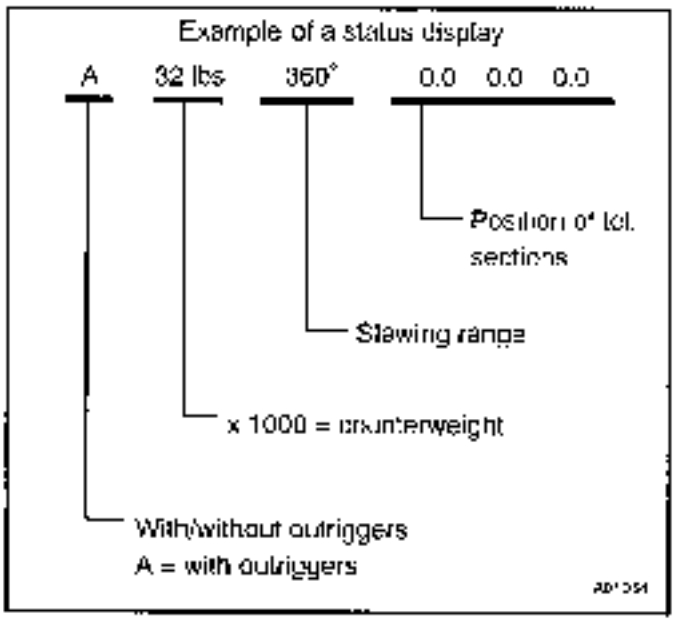

The actual radius is indicated on display (4).

Display (5) shows the shutdown value (maximum permissible lifting capacity) in lbs (value on the display x 1000). The SLI calculates this value from the set operating mode, reeving mode, actual boom angle and boom length.

The actual load on the crane which is comprised of the load on the hook + hook block + lifting tackle is indicated on display (6) (value on the display x 1000)

https://www.besttruckmanuals.com/

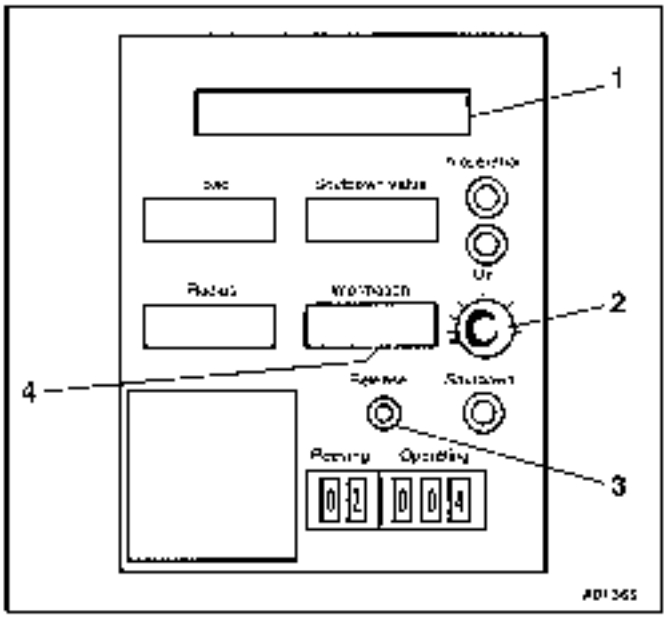

By turning the information switch (2) further information for operating the crane can be indicated on display (4):

a Degree of utilization in %

b Possible hook height in ft

c Main boom length in ft

d Main boom angle in degrees

e No function

f Hydraulic pressure on piston surface in derricking cylinder in bar

g Hydraulic pressure on ring surface in derricking cylinder in bar

h No function

i No function

k No function

Warning

When the warning limit for the maximum permissible load value (approx. 100% of the shutdown value) is reached, a buzzer sounds. The buzzer can be switched off by pressing release button (3).

If you hold the release button down the status display (1) switches over to signal **N**.

https://www.besttruckmanuals.com/

SLI shutdown

The SLI causes a shutdown, a buzzer sounds, the letter "E" flashes on the left-hand side of the status display (1) and indicator lamps (2) and (4) 'shutdown' light up if:

– the shutdown value is exceeded

– any of the faults listed in the table of '*Status messages*' occur.

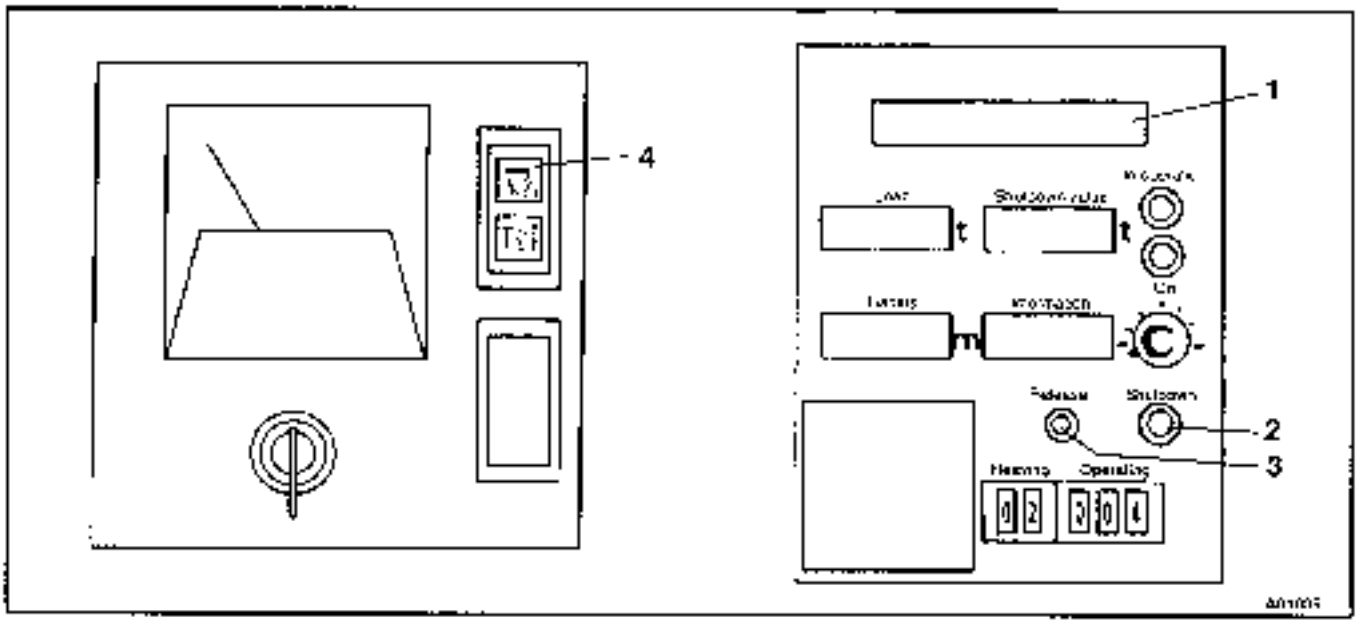

The buzzer can be switched off by pressing the "release" button (3).

If you know why the shutdown has occurred (e.g. the shutdown value has been exceeded by lowering the boom too far) you can stop the shutdown by leaving the shutdown range.

This is done by putting down the load, raising the boom or retracting the telescope sections of the boom.

Retracting the telescope sections should be avoided if possible, however, as, depending on the position of the telescope sections, the SLI will switch over to a different lifting capacity range (e.g. from fixed length to intermediate length), please see Section 4.6.13 "Telescoping the boom"

https://www.besttruckmanuals.com/

If you have not already switched off the buzzer press the "release" button after you have left the shutdown range to cancel the shutdown.

If you do not know why the shutdown has occurred, hold the "release" button down.

After approximately 1 second, the status display will change:

. . . . . f . . M . . . . .

If, for example the information switch is in position b.

Continue to hold the "release" button down and turn the information switch to position f.

. . . . . f . . M . f - 1 . . . .

In the table of *status messages* you will find under "f=1" that the angle of the boom is not within the permitted range.

https://www.besttruckmanuals.com/

Status messages

Collective-error	Individual-fault	Fault (countermeasures)
a	1	Operating mode not authorized (check set operating mode and actual operating mode)
	2	Operating mode selector switch faulty (repair)
	7	Reeving mode (enter reeving condition)
	8	Impermissible operating mode (cf. fault a1)
d	1	Data transmitter hydr. pressure ring area in derricking cylinder
	2	Data transmitter angle of main boom
	3	Data transmitter length of tel. sec. II and III
	5	Data transmitter hydr. pressure piston area in derricking cylinder
	6	Data transmitter length tel. sec. I
		(faults d1 - d6 repair necessary)
e	1	Incorrect telescope section lengths (check selected operating mode and actual operating mode
	2	Radius (raise boom)
f	1	Boom angle (raise boom)

Message	Cause
L	Overload (reduce load moment)
M	Shutdown (leave shutdown range, and reset/repair SLI)
N	Warning (shutdown level reached)

When message **L** appears all movements which increase the load moment are stopped and movements can only be carried out in the opposite directions.

Stopped movements	Permitted movements
Hoist - raising	Hoist - lowering
Lowering the boom	Raising the boom
Extending telescope sections	Retracting telescope sections

Message **M** appears automatically with all the collective error messages from **a** to **f** and with message **L**

Danger: When any error message appears crane operation must be stopped immediately.

Repairs to the SLI may only be carried out by trained personnel.

https://www.besttruckmanuals.com/

SLI override

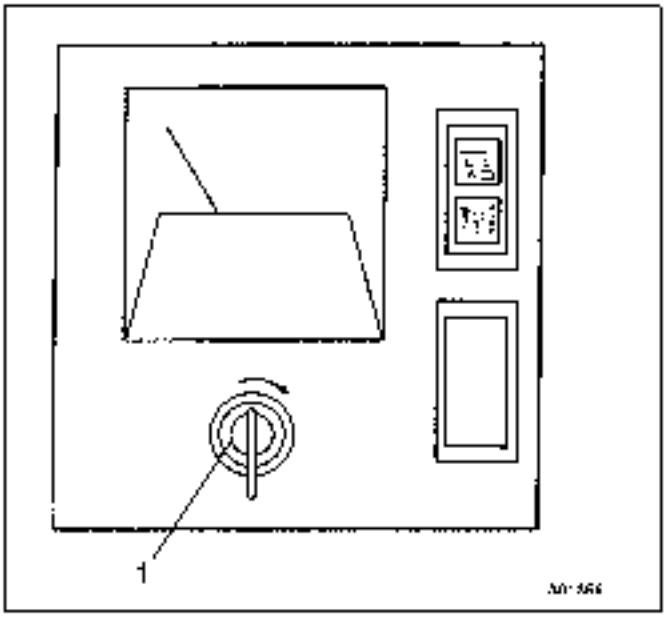

The SLI can be overridden with key switch (1).

- Press the switch in and turn it to the right.

Note: Please refer to Section 4.6.5 "Safe Load Indicator (SLI)".

Caution: Only override the SLI when it is absolutely necessary and only for a short time. When the SLI is overridden the crane has no overload protection device. It is strictly forbidden to work with the crane while the SLI is overridden.

https://www.besttruckmanuals.com/

4.6.6 Limit switches

Lifting limit switches

When the lifting limit switch is triggered all movements which increase the load moment are stopped.

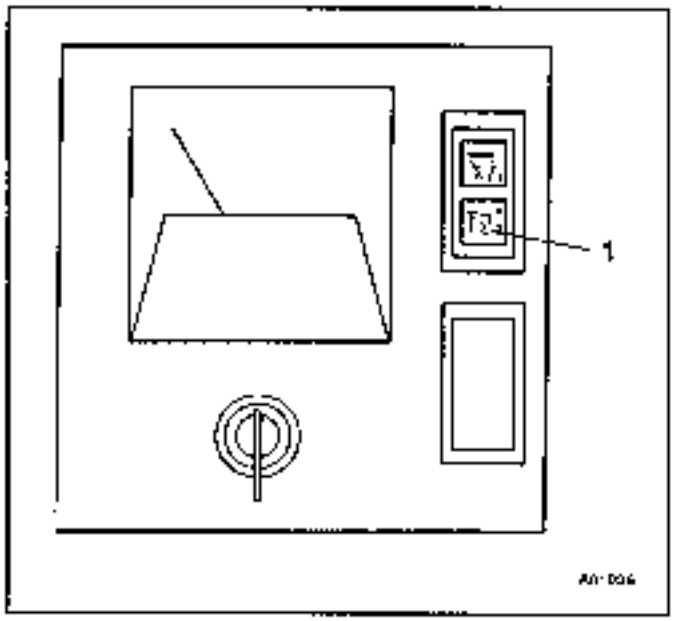

If a shutdown has been triggered by the lifting limit switch warning light (**1**) lights up. No error is indicated on the SLI.

Caution: The lifting limit switch does not work when the SLI is overridden.

Danger: It is strictly forbidden to work with the SLI switched off, overridden or out of action or when it is not working properly.

Lowering limit switch

If only five turns are left on the rope drum the movement "hoist - lowering" is stopped.

https://www.besttruckmanuals.com/

4.6.7 Spotlights

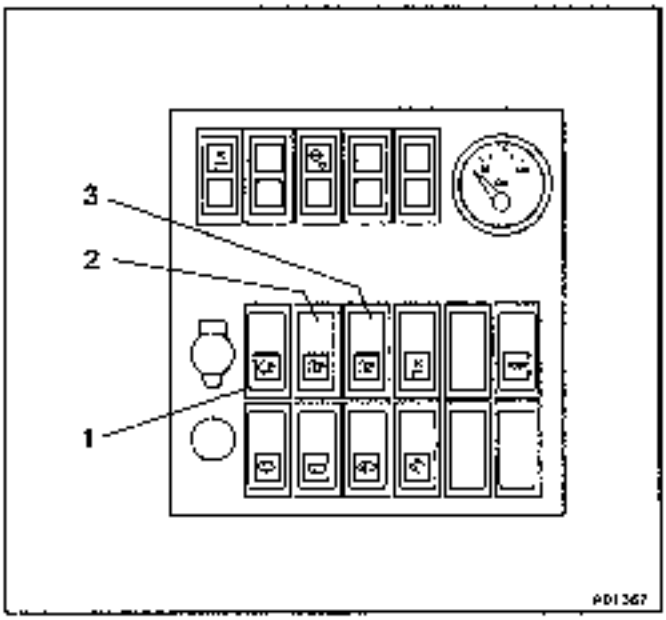

The spotlight for checking the hoist rope (optional equipment) is switched on and off with toggle switch (3).

Two additional spotlights can also be connected to the superstructure's power supply. There are two sockets on the outside of the crane operator's cab on the left and right-hand side under the windscreen.

The left socket is switched on and off with toggle switch (1)

The right socket is switched on and off with toggle switch (2).

4.6.8 Dead man's switch

All crane functions are protected by a dead man's switch system. This comprises a dead man's switch (1) on both control levers and a seat switch in the crane operator's seat.

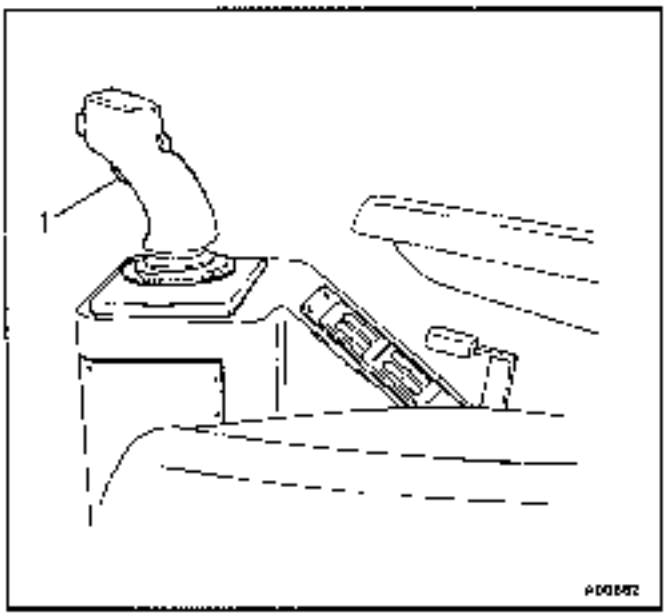

The crane movements can only be carried out when the operator is sitting on the seat or when at least one of the dead man's switches is held down. As soon as the operator gets up and none of the dead man's switches are held down all crane movements are stopped immediately.

https://www.besttruckmanuals.com/

4.6.9 Main hoist

The main hoist rope can be used for working with the main boom or boom extension.

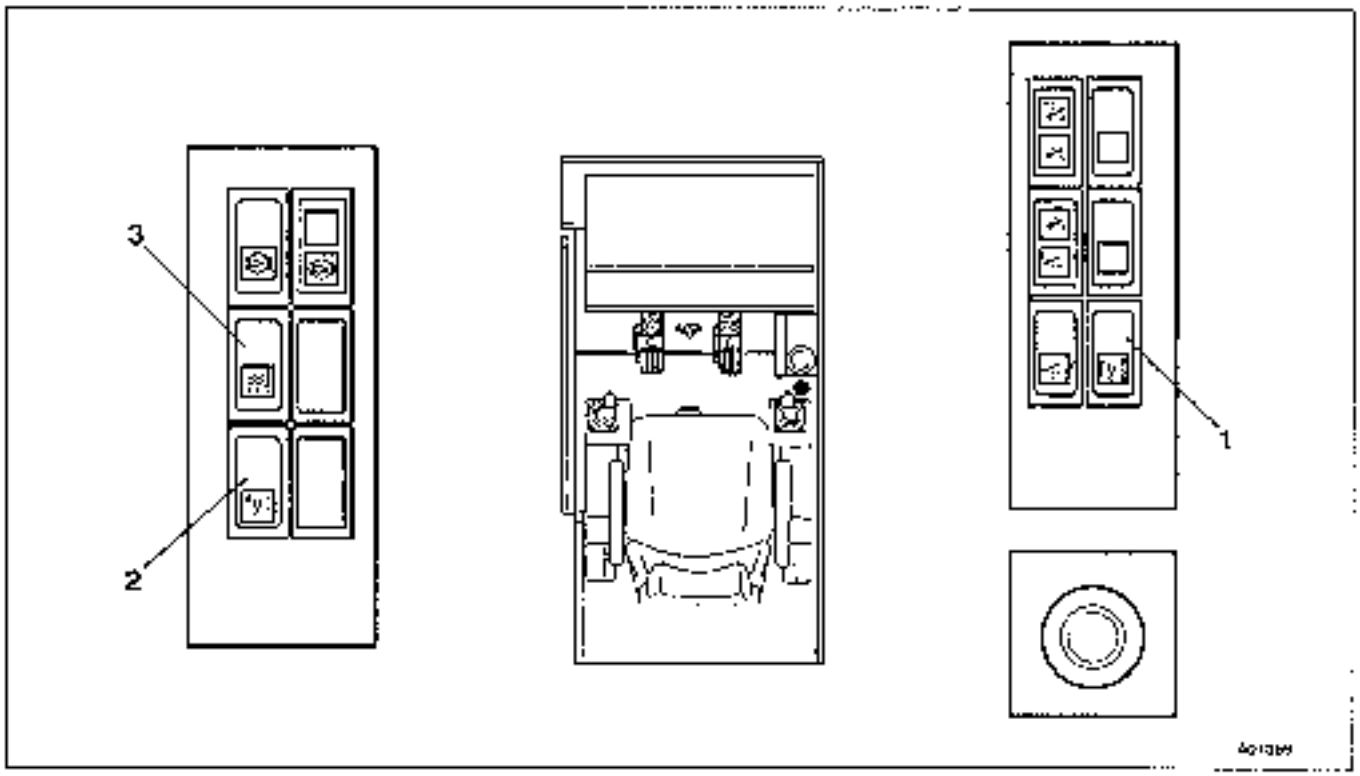

- Turn on the main hoist with rocker switch (1). Press the rocker switch backwards.
- Check that the two-hook operation is turned off. Press the rocker switch (3) forwards.
- Turn off the auxiliary hoist with rocker switch (2) so that it can not be switched on accidentally. Press the rocker switch forwards.

Caution: Always switch off the hoist which is not required. If the hoist rope is reeled up and the hoist is switched on accidentally the rope slackens. Loops are formed on the rope drum which will cause the load to slip will destroy the hoist rope and may lead to accidents

https://www.besttruckmanuals.com/

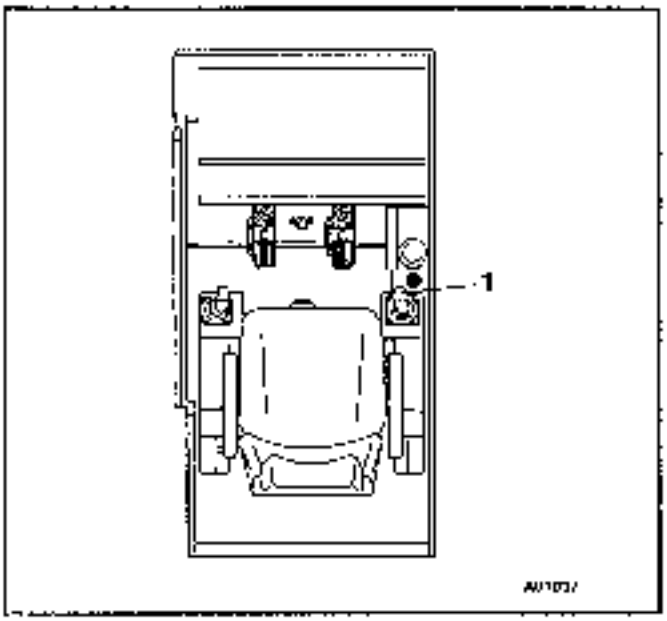

Lifting:
Pull the right-hand control lever (1) backwards

Lowering:
Push the right-hand control lever (1) forwards

The speed of the main hoist can be regulated with the lever and by altering the engine speed.

The high strength hoist rope is stiff at low temperatures. If the multi-fall reeved hook block cannot be lowered, hang a weight on it.
When winding the rope onto the drum the hoist must be run slowly, as the rope is difficult to reel when it is stiff.

The rope running on the drum can be monitored with the mirror over the hoist.

Danger: When work is stopped for a short period always lower the load onto the ground. Never leave the cab with a load still hanging from the hook.
Suspended loads can cause accidents.

A hoist drum synchro is be built into the manual control lever. When the hoist drum is turning, the end of the manual lever vibrates slightly.

The lowering limit switch prevents the rope from being reeled off the drum completely. It shuts down the lowering movement when only five turns are left on the drum.

Caution: If the lowering limit switch is not working properly or is damaged, it is possible to unreel the rope from the drum completely. Because the drum continues to turn the rope is then reeled back onto the drum in the other direction. This may cause the rope to break.

Caution: The drum must not be turned further if all of the rope has been reeled onto the drum. This would alter the shutdown point of the lowering limit switch.

https://www.besttruckmanuals.com/

Working with two hooks

For working with two hooks the main and auxiliary hoists can be used independently of each other in different directions and at different speeds

Caution: The SLI only covers operation with one hook. **The SLI gives no protection when you are working with two hooks.** Working with two hooks can overload the crane and may cause the crane to overturn

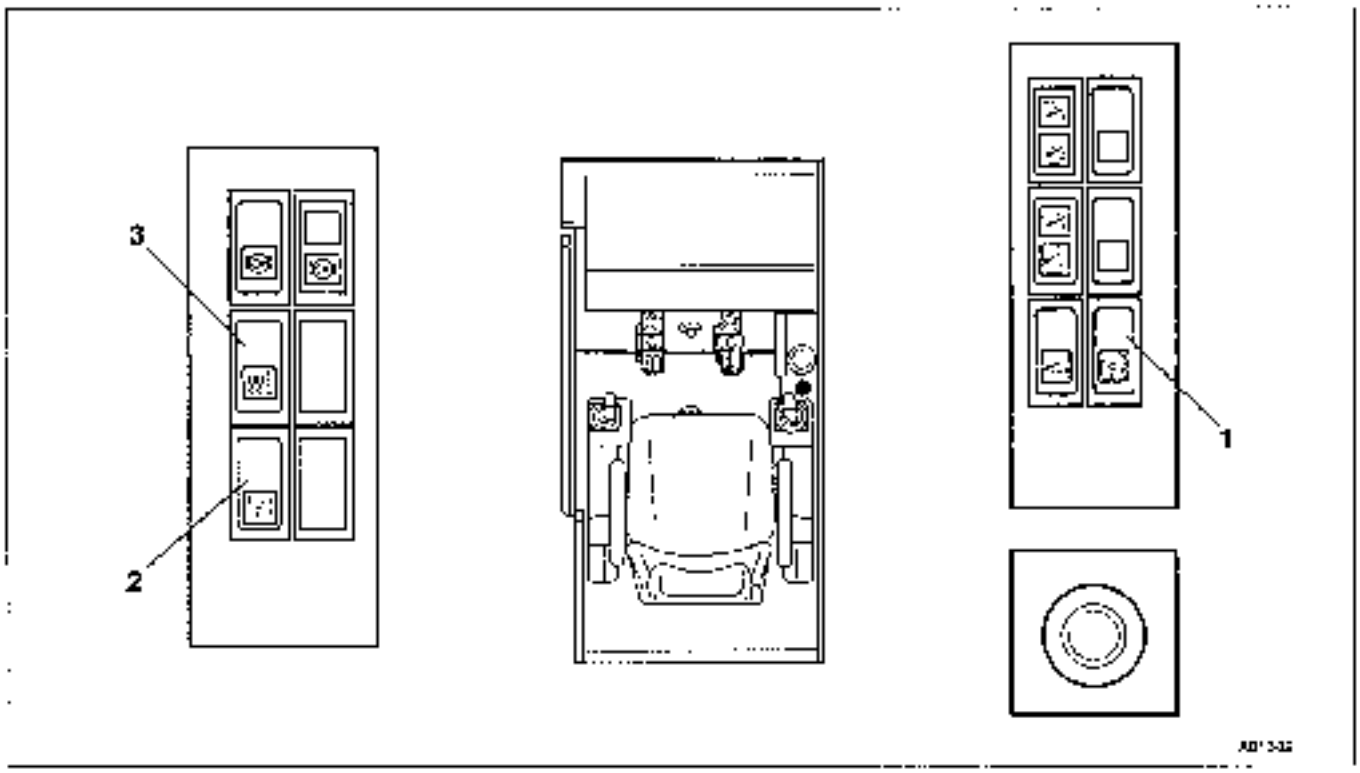

- Switch on the auxiliary hoist with rocker switch (**2**). Press the rocker switch backwards.
- Switch on the two-hook operation with rocker switch (**3**). Press the rocker switch backwards.
- Check that the main hoist is switched on. Press the rocker switch (**1**) backwards.

Caution: When working with two hooks the acceleration forces must be kept as low as possible. Only move the load very slowly.

Caution: Never press the fast speed switch (foot-operated switch) while you are working with two hooks. When fast speed is switched on the two hoists can not be controlled independently and **accidents** may occur

https://www.besttruckmanuals.com/

Fast speed (for raising and lowering)

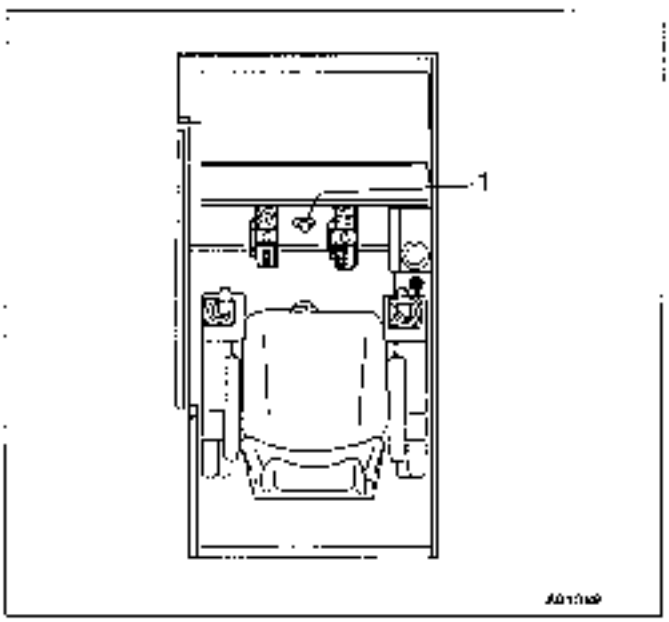

Fast speed is switched on with the foot-operated switch (1). Fast speed should only be used for raising and lowering without a load on the hook.

Caution:

Reduce the engine speed before switching on fast speed. The engine speed can be increased again after fast speed has been switched on.

When lowering take care that the rope does not slacken.

https://www.besttruckmanuals.com/

4.6.10 Auxiliary hoist (optional equipment)

If the main hoist should fail the auxiliary hoist rope can be used on the main boom.

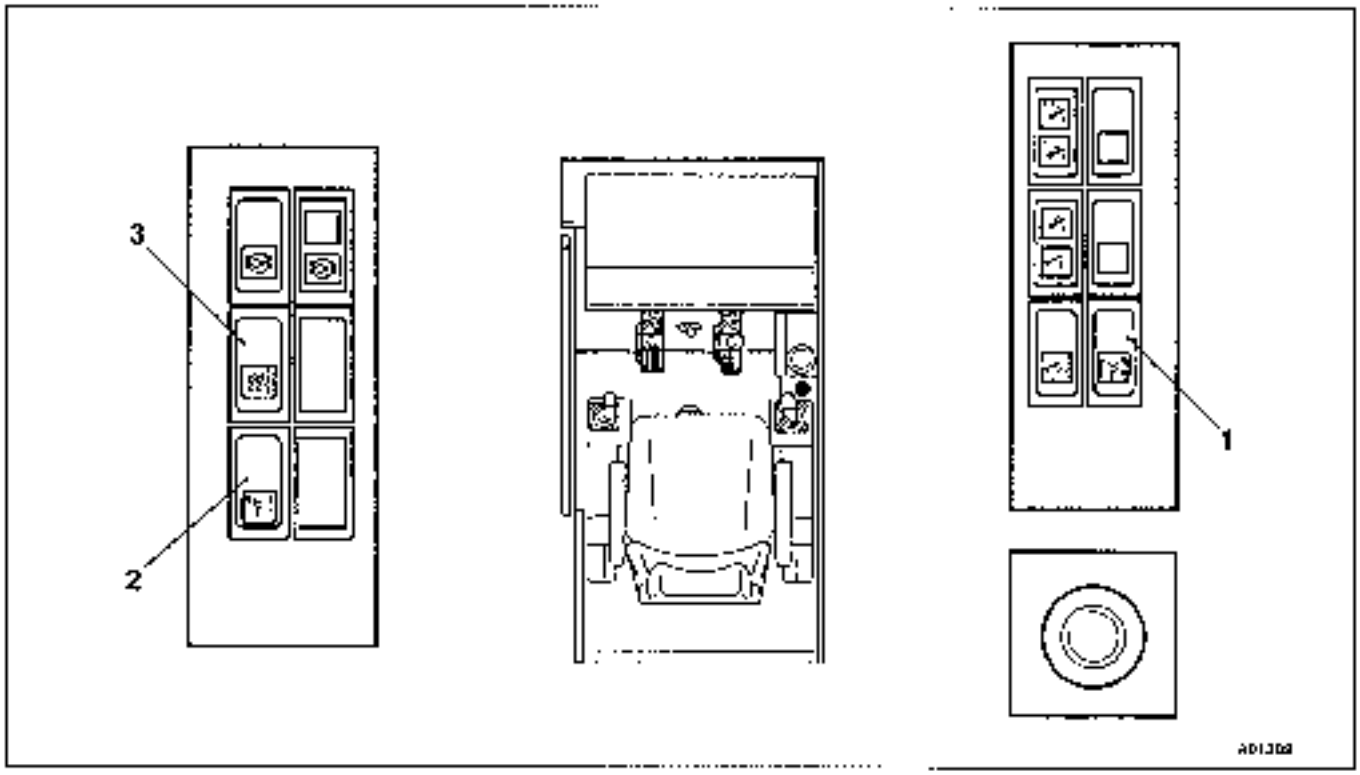

- Turn on the auxiliary hoist with rocker switch (2). Press the rocker switch backwards.
- Check that the two-hook operation is turned off. Press the rocker switch (3) forwards.
- Switch off the main hoist with rocker switch (1) so that it can not be switched on accidentally. Press the rocker switch forwards.

Caution: Always switch off the hoist which is not required. If the hoist rope is reeled up and the hoist is switched on accidentally the rope slackens. Loops are formed on the rope drum which will cause the load to slip will destroy the hoist rope and may lead to **accidents**.

https://www.besttruckmanuals.com/

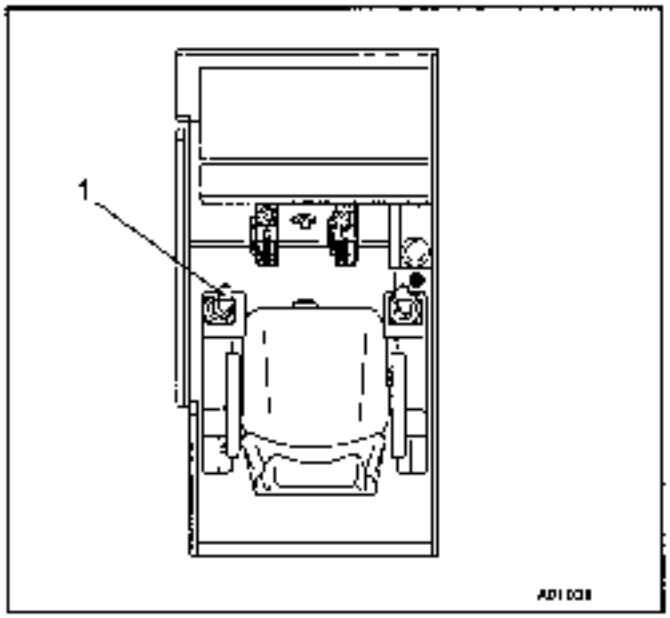

Lifting:
Pull the left-hand control lever (1) backwards

Lowering:
Push the left-hand control lever (1) forwards

The speed of the auxiliary hoist can be regulated with the lever and by altering the engine speed.

The high stregth hoist rope is stiff at low temperatures. If the multi-fall reeved hook block cannot be lowered, hang a weight on it.
When winding the rope onto the drum the hoist must be run slowly, as the rope is difficult to reel when it is stiff.

The rope running on the drum can be monitored with the mirror over the hoist.

Danger: When work is stopped the load must always be lowered.
Never leave the crane operator's cab with a load still hanging on the hook. Suspended loads can cause accidents.

A synchro is built into the manual control lever. When the hoist drum turns the end of the lever vibrates slightly.

The lowering limit switch prevents the hoist rope from being reeled off the drum completely. It shuts down the lowering movement when only five turns are left on the drum

Caution: If the lowering limit switch is not working properly or is damaged it is possible to unreel the rope from the drum completely. Because the drum continues to turn the rope is then reeled back onto the drum in the other direction. This may cause the rope to break.

Caution: The drum must not be turned further if all of the rope has been reeled onto the drum. This would alter the shutdown point of the lowering limit switch.

https://www.besttruckmanuals.com/

Working with two hooks

For working with two hooks the main and auxiliary hoists can be used independently of each other in different directions and at different speeds.

Caution: The SLI only covers operation with one hook. **The SLI gives no protection when you are working with two hooks.** Working with two hooks can overload the crane and may cause the crane to overturn.

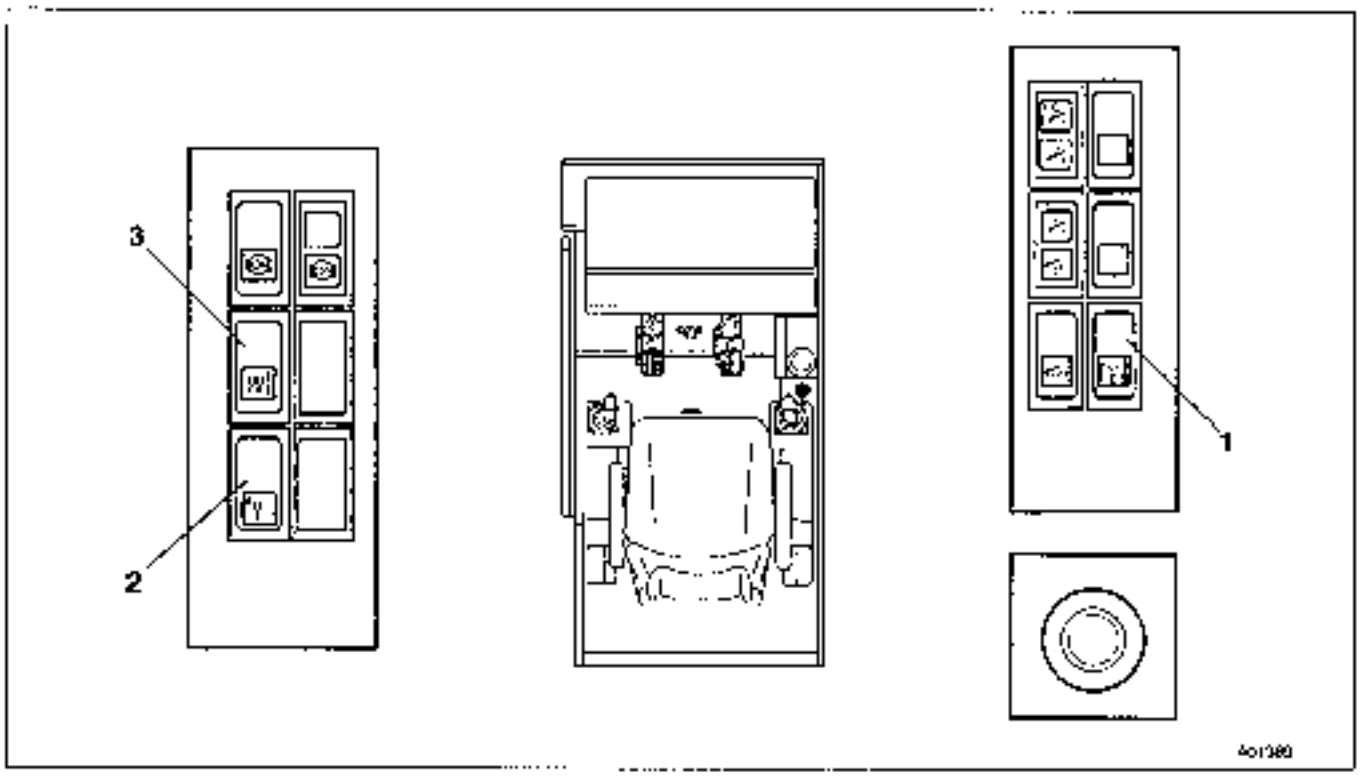

- Switch on the main hoist with rocker switch (1). Press the rocker switch backwards.
- Switch on the two-hook operation with rocker switch (3). Press the rocker switch backwards.
- Check that the auxiliary hoist is turned on. Press the rocker switch (2) backwards

Caution: When working with two hooks the acceleration forces must be kept as low as possible. Only move the load very slowly.

Caution: Never press the fast speed switch (foot-operated switch) while you are working with two hooks. When fast speed is switched on the two hoists can not be controlled independently and **accidents** may occur.

https://www.besttruckmanuals.com/

Fast speed (for raising and lowering)

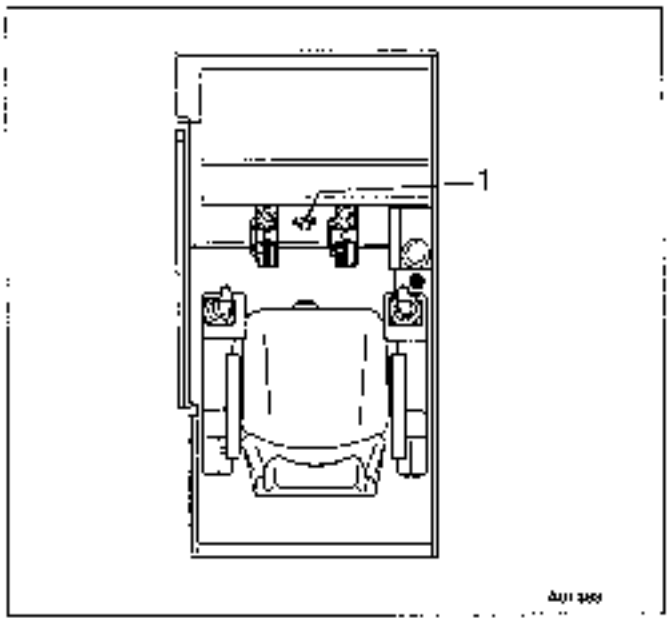

Fast speed is switched on with the foot-operated switch (**1**). Fast speed should only be used for raising and lowering without a load on the hook.

Caution:

Reduce the engine speed before switching on fast speed. The engine speed can be increased again after fast speed has been switched on.

When lowering take care that the rope does not slacken.

https://www.besttruckmanuals.com/

4.6.11 Slewing gear

Permanent brake for slewing gear

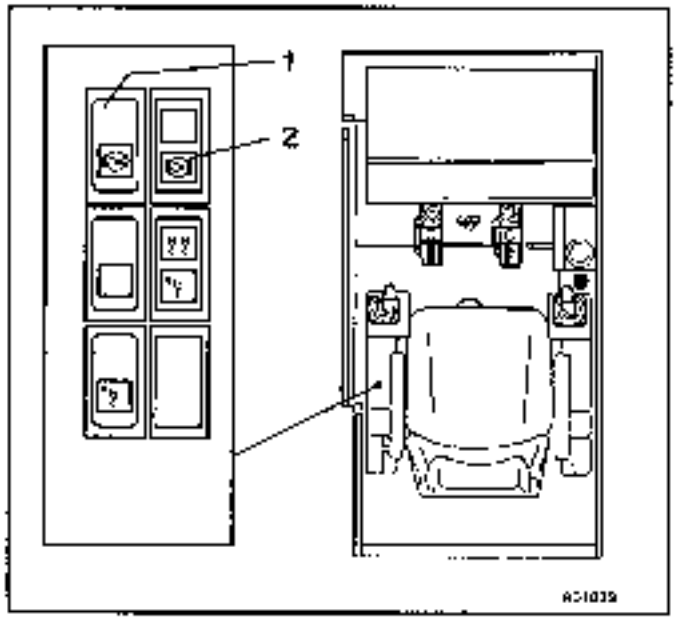

The permanent brake for the slewing gear is operated with the rocker switch (**1**).

The indicator lamp (**2**) is on when the permanent brake of the slewing gear is on.

Note: When the crane engine is switched off the slewing gear's permanent brake engages automatically.

Caution: The slewing gear's permanent brake must not be used to decelerate the slewing movement.

Do not engage the slewing gear brake until the superstructure has stopped moving.

https://www.besttruckmanuals.com/

Slewing

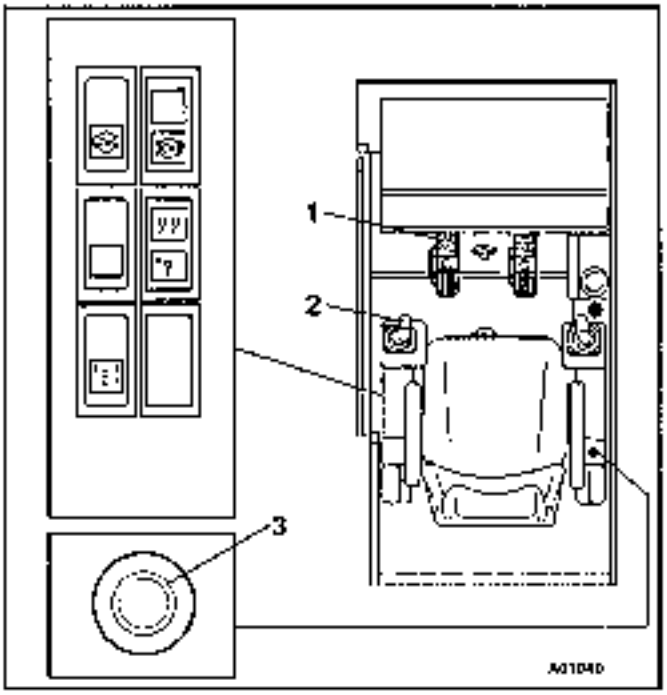

Slewing to the left:
Push the left-hand control lever (**2**) to the left

Slewing to the right:
Push the left-hand control lever (**2**) to the right

The slewing speed can be regulated with the lever or by altering the engine speed.

The slewing speed can be regulated more finely with knob (**3**)
- turn the knob to the left to increase the maximum slewing speed
- turn the knob to the right to reduce the maximum slewing speed

When the control lever is released the slewing movement slows down and the turntable comes to a halt. When the control lever is in the central position and the slewing gear brake is not engaged the superstructure can be moved by external influences until it finds its own position (e.g. in wind or when working with a second crane).

Braking the slewing movement

The slewing movement can be braked by slowly pressing the service (foot) brake (**1**) for the slewing gear.

Note: Emergency stops are carried out by pressing the service brake pedal (**1**) right down to the floor (only to be done in emergencies).

Caution: Never brake the turntable by slewing it in the other direction.

Caution: Never use the slewing gear's permanent brake to brake the turntable. It may only be applied when the superstructure has stopped moving.

https://www.besttruckmanuals.com/

4.6.12 Raising/lowering the boom (derricking) (main boom only)

The angle of the main boom can be varied between 1.5° and +84° from the horizontal by raising or lowering it.

Caution: It is strictly forbidden to raise loads by raising the boom as the SLI does not then function and the crane may overturn.

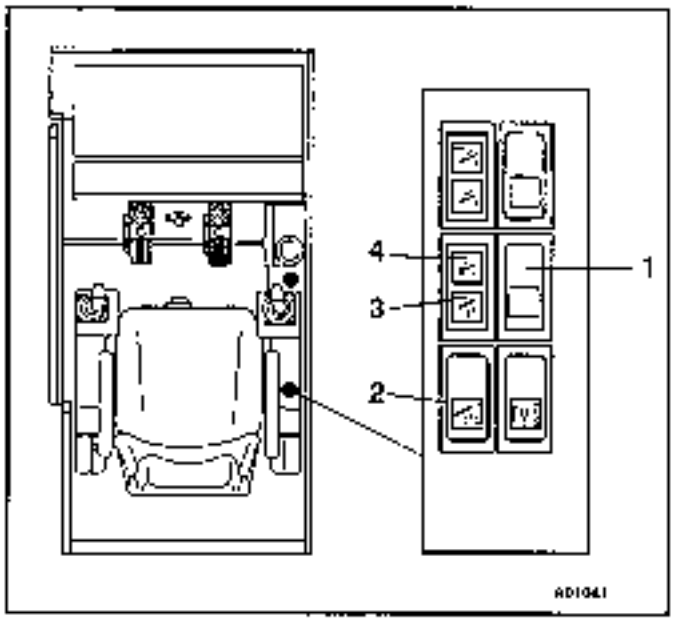

The derricking gear can be switched off with toggle switch (2) to prevent it from being switched on accidentally.

The right-hand control lever is switched on with rocker switch (1). Indicator lamps (3) and (4) indicate which function has been switched on.

Press rocker switch (1) in at the bottom. Indicator lamp (3) indicates the function 'derricking'.

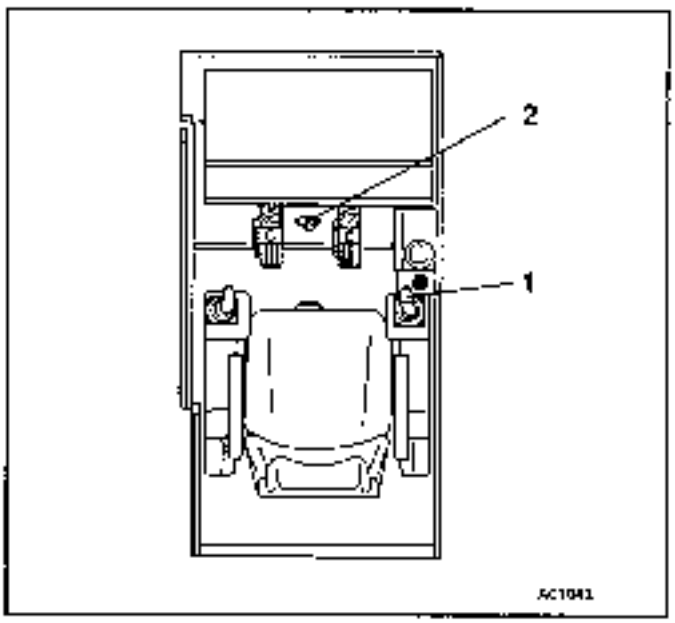

Lowering boom:
Push the right-hand control lever (1) to the right

Raising boom:
Push the right-hand control lever (1) to the left

The derricking speed can be regulated with the lever or by altering the engine speed.

Fast speed (for raising and lowering the boom)

Fast speed is switched on with foot-operated switch (2).

https://www.besttruckmanuals.com/

Caution: If the crane is overloaded the SLI shuts down lowering of the boom.

Note: If the boom is telescoped out (extended) and cannot be lifted from a flat position with the hook block hanging free, the hook block can be lowered onto the ground to make it easier to raise the boom.

Depending on the size of the load and length of the boom the SLI shuts down the lowering procedure before the horizontal position is reached. When a boom extension is installed this shutdown takes place at an earlier stage.

Caution: The boom can only be lowered to the horizontal position under certain circumstances without risk of the crane overturning. Depending on the size of the counterweight which is installed the length of the boom may not exceed the following values:

Installed counterweight		Maximum boom length		Telescope status: Telescope section		
t	lbs	m	ft	I	II	III
14.8	32 050	41.0	134.5	1.0	1.0	1.0
10.0	22 050	31.6	103.5	1.0	1.0	0.0

https://www.besttruckmanuals.com/

4.6.13 Telescoping the boom

Telescope sections I and II/III can be telescoped in any order. Telescope sections II and III, however, can only be extended/retracted one after the other.

The right-hand control lever is switched on with rocker switch (2). Indicator lamps (3) and (4) indicate which function has been switched on.

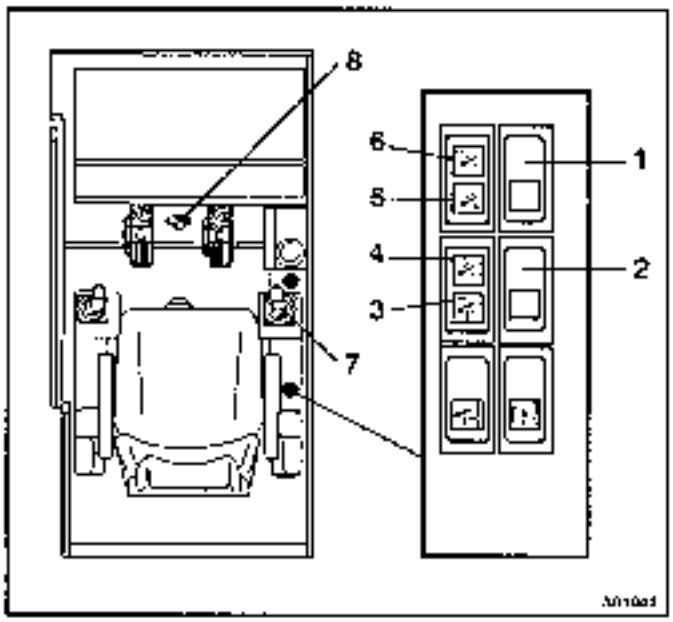

Press rocker switch (2) in at the top. Indicator lamp (4) indicates the function "telescoping".

With toggle switch (1) you can select whether telescope section I or sections II and III are telescoped. Indicator lamps (5) and (6) indicate the which function has been switched on.

Telescoping out (extending):

Move the right-hand control lever (7) to the right.

Telescoping in (retracting):

Move the right-hand control lever (7) to the left.

The telescoping speed can be regulated with the lever or by altering the engine speed.

Note: The boom must be raised to at least 30° to retract the telescope sections as the telescope cylinders are not otherwise powerful enough to retract the boom.

Fast speed (for telescoping the boom in and out)

Fast speed is engaged by pressing foot-operated switch (8).

The distance between the hook block and boom head changes when the boom is telescoped. Pay out the hoist rope when you telescope the boom out and reel the hoist rope onto the drum when you telescope the boom in.

Note: If the hook block reaches the lifting limit switch when the boom is telescoped out (extended) the telescoping movement is stopped.

Caution: If the hook block touches the ground while the boom is being telescoped in the rope slackens leading to loops being formed on the hoist drum. This can cause the load to drop during operation and will destroy the rope.

https://www.besttruckmanuals.com/

The actual telescoping arrangement of the boom is indicated on the SLI status display

If a telescope is retracted/extended the length of the individual telescope sections changes simultaneously on the status display

If all telescope sections are retracted, or are extended half way or fully, the lifting capacity tables for main boom fixed lengths apply.

Example:

Indication of the telescope arrangement on the status display

A 22 lbs 360° **0.5 0.5 0.0**

Telescope section I - extended **0.5** times (fixed length)
Telescope section II - extended **0.5** times (fixed length)
Telescope section III - extended **0.0** times (fixed length)

If two telescope sections are extended to a fixed length and the third telescope section is extended to some other length, the lifting capacity tables for main boom intermediate lengths apply.

Example:

Indication of the telescope positions on the status display

A 22 lbs 360° **035 050 000**

Telescope section I extended **35 %** (intermediate length)
Telescope section II extended **50 %** (fixed length)
Telescope section III retracted (fixed length)

When the boom is extended to a fixed length these lengths are shown as decimals on the status display (e.g. 0.5).

When boom is extended to intermediate lengths, these lengths are shown in percent on the status display (e.g. 035).

https://www.besttruckmanuals.com/

In the lifting capacity tables telescoping is listed in the headings.

	Main boom fixed length	or	Main boom intermediate length
Tel. sec. I	0.5		0 - 50
Tel. sec. II	0.5		50
Tel. sec. III	0.0		0

The telescope sections can also be extended under load. Two of the three telescope sections must be a fixed length position before a third telescope section is telescoped.

The load which can be telescoped depends however on the following.

- the angle of the boom
- the lubrication of the sliding wear pads between the telescope sections

Note: The telescope sections should, however, be extended to the required length before a load is lifted. You should only telescope the boom under load if the conditions on the site necessitate this.

https://www.besttruckmanuals.com/

4.6.14 Movements which can be carried out simultaneously

Lifting/lowering with the main hoist (without fast speed) can be carried out simultaneously with:

- Slewing
- Telescoping
- Slewing and telescoping
- Lifting/lowering the boom
- Slewing and lifting/lowering the boom

Lifting/lowering with the auxiliary hoist (without fast speed) can be carried out simultaneously with:

- Slewing
- Telescoping
- Slewing and telescoping
- Lifting/lowering the boom
- Slewing and lifting/lowering the boom

Caution: The SLI provides no protection when you are working with two hooks. The SLI only covers operation with one hook. Working with two hooks can overload the crane and cause it to overturn.

https://www.besttruckmanuals.com/

4.7 Moving the truck crane when it is rigged

This section describes how the truck crane is moved with the counterweight and boom extension (optional equipment) installed

Danger: It is forbidden to move the truck crane with a load on the hook. Put the load down before you move the truck crane otherwise **accidents may occur**.

4.7.1 Ground travelled over

The ground should be as flat as possible. If it is not level this can be compensated with the carrier level adjustment system. If the surface area of the tyres is too small so that the permitted load on the ground is exceeded their surface area must be increased by placing suitable, strong material (e.g. wooden planks) underneath them.

Caution: Do not reduce the tyre pressure (i.e. do not let out air) otherwise you will damage the tyres.

4.7.2 Position of the boom

The truck crane may only be moved under certain conditions. Depending on the counterweight and boom extension which are installed the boom has to be moved to a certain position.

Danger: Always move the boom to the correct position before you move the rigged truck crane. If the boom is in other positions the permitted load on the axle lines will be exceeded and the crane may overturn.

- Set the correct operating mode code on the SLI. The SLI codes are listed in the **lifting capacity tables**.
- Move the boom to the correct position (as listed in the **lifting capacity tables**).

Note: If the SLI shuts down the lowering movement before the boom has reached the correct position the SLI has to be overridden (please see Section 4.6.5 "Safe Load Indicator (SLI)").

Caution: When the SLI is overridden the crane has no overload protection device and **accidents may occur**

https://www.besttruckmanuals.com/

4.7.3 Moving the rigged truck crane

Locking the superstructure and putting on the slewing gear's permanent brake

Before the truck crane is moved the superstructure must be interlocked with the carrier .

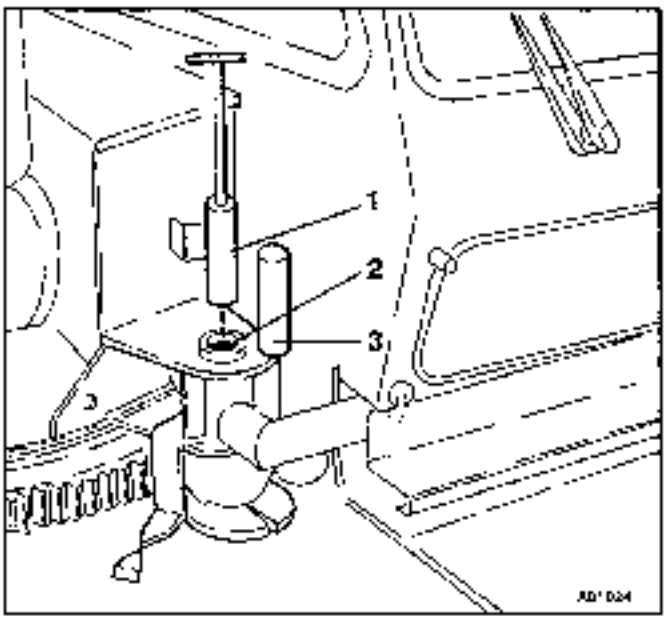

- Remove pin (1) from the holder (3).
- Insert the pin in the hole (2) for locking the superstructure.

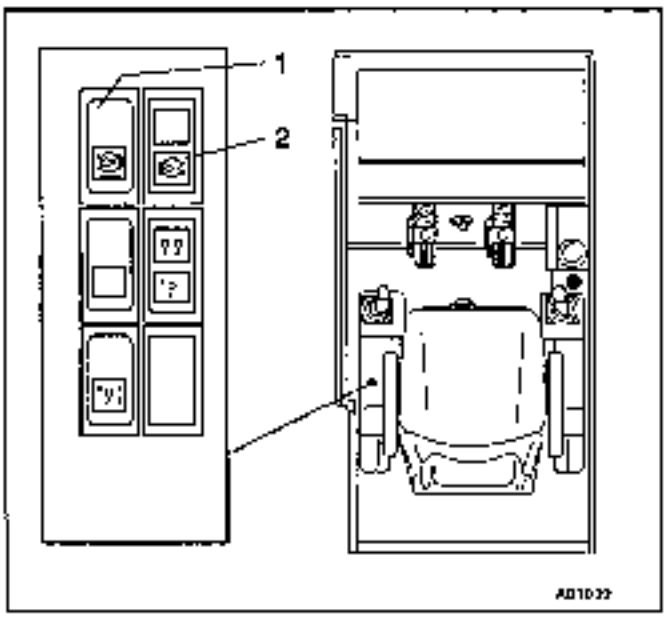

- Press rocker switch (1) and put on the slewing gear's permanent brake.

Indicator lamp (2) is on when the slewing gear's permanent brake is on.

Note: When the crane engine is turned off the slewing gear's permanent brake is automatically engaged.

https://www.besttruckmanuals.com/

Retracting the outriggers

Retract the outrigger cylinders until the wheels are just above the ground.

Danger: When the outriggers are being retracted take care that the truck crane does not tip. Retract all the outriggers as uniformly as possible.

Suspension locking system

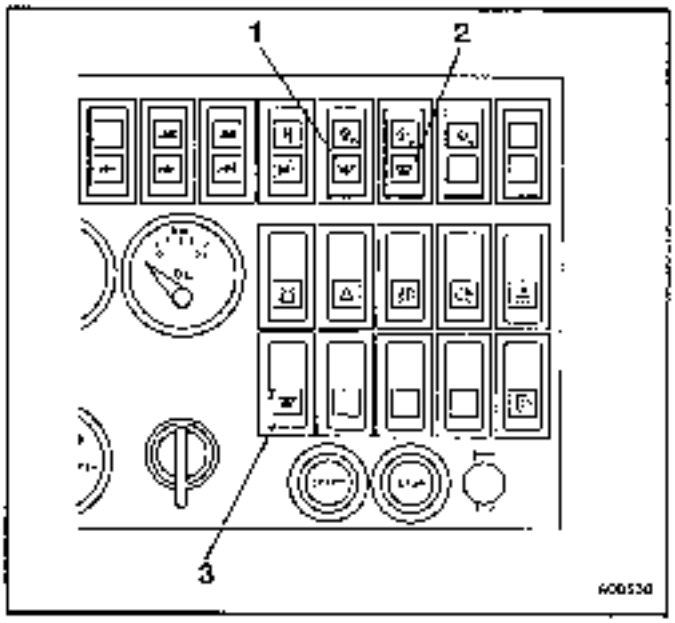

- Turn the suspension lock off by pressing rocker switch (3).
  Indicator lamps (1) and (2) must go out.
- Retract the outrigger cylinders until the truck crane approximately reaches the on-the-road level.
- Turn the suspension lock on again by pressing rocker switch (3). Indicator lamps (1) and (2) light up as soon as the axle lines are locked

- Retract the outrigger cylinders fully

Danger: To reduce the risk of the crane tipping do not raise the outrigger pads more than 5 to 10 cm (2 to 4 in) off the ground Leave the outrigger beams extended.

https://www.besttruckmanuals.com/

Driving

Danger: Before the truck crane is moved the tyre pressures must be checked. The truck crane is only permitted to be moved if the tyre pressures are at the stipulated levels (please see Section 3.4.6 "Checking the tyres"). Do not reduce the tyre pressure otherwise you will damage the tyres.

Danger: Before the rigged truck crane is moved the wind speed must be checked. The same maximum permitted wind speeds apply as for working with the crane (please see Section 2.4.9 "Effect of wind on crane operations").

- Before moving the truck crane switch the transfer case to the off-the-road gear (please see Section 3.7.1 "Off-the-road gear").
- Put the vehicle into gear 1 (please see Section 3.5.2 "Gears of the automatic gearbox").
- Only drive very slowly.
- When turning corners the turning radius should be as large as possible.
- Only steer the truck crane while it is moving and avoid sharp steering movements.
- If the ground is not level use the carrier level adjustment system to keep the crane horizontal (please see Section 3.7.6 "Carrier level adjustment system").

Extending the outriggers

Before you start working with the crane it must be supported with the outriggers (please see Section 4.3.4 "Outriggers").

https://www.besttruckmanuals.com/

4.8 Stopping work and unrigging the truck crane

4.8.1 Stopping work

Danger: When work is stopped the load must always be lowered onto the ground.
Never leave the crane operator's cab with a load still on the hook.
Suspended loads can cause accidents.

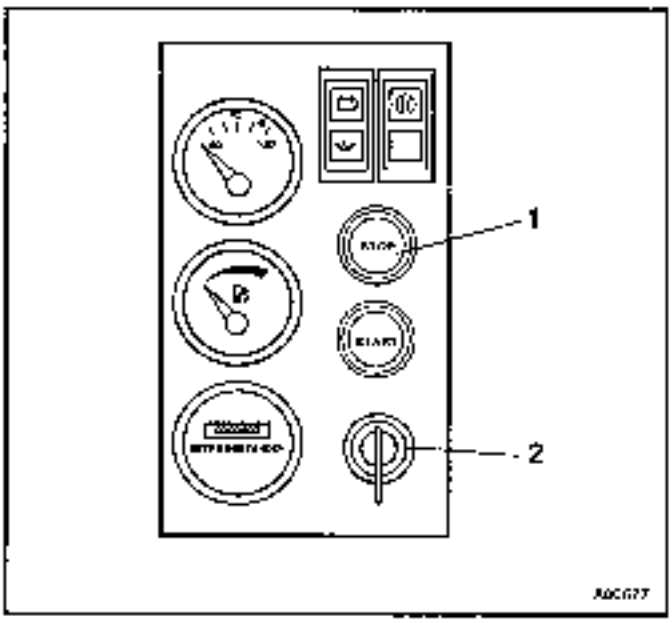

- For longer stops the telescope sections must be telescoped in (retracted).
- Engage the permanent brake for the slewing gear.
- Turn the engine off by pressing the "stop engine" button (1), switch off the ignition (2) and remove the key.

https://www.besttruckmanuals.com/

If work is interrupted for more than 8 hours.

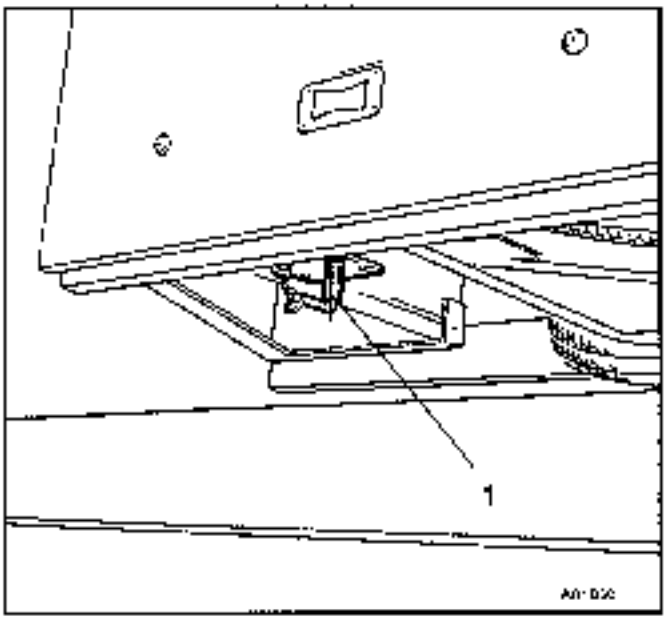

- Turn off all electric power consumers.
- Turn off the crane engine.
- Remove the ignition key.
- Switch off the battery master switch (1) on the superstructure.

Caution:

Never switch off the battery master switch while the crane engine is running.
Never disconnect the cables between the battery and the alternator while the crane engine is running.

https://www.besttruckmanuals.com/

4.8.2 Unrigging the truck crane

On the superstructure

- Telescope the telescopic boom in completely (please see Section 4.6.13 "Telescoping the boom")
- Remove the counterweight and take it off the crane (please see Section 4.6.4 "Counterweights").
- Turn the superstructure in the direction of driving.
- Fold in the mirror for monitoring the rope, otherwise the height of the vehicle as stated in Section 8.1 "Dimensions" will be exceeded.
- Put on the permanent brake for the slewing gear.
- Lock the superstructure with the mechanical lock (insert the pin).
- Rest the boom on its support.
- Switch off the engine-independent heating system (optional equipment) in the crane operator's cab (please see Section 4.2.3 "Additional water heating system").
- Turn off the crane engine and remove the ignition key in the crane operator's cab (superstructure).
- Turn off the battery master switch on the superstructure if work is to be stopped for more than 8 hours.
- Fold down the deflection sheave at the foot of the swing-away lattice extension otherwise the height of the vehicle as stated in Section 8.1 "Dimensions" will be exceeded.

On the carrier

- Retract the outriggers and secure the outrigger beams and outrigger pads for driving on roads (please see Section 4.3.4 "Outriggers").
- Unlock the suspension and set the suspension system to the correct level for driving on roads (please see Sections 3.4.15 "Checking the suspension system" and 3.4.16 "Checking that the level of the carrier is correct for driving on roads").
- Turn off the carrier engine and remove the key from the ignition in the crane driver's cab (carrier).
- If work is going to be stopped for longer than 8 hours, switch off the battery master switch on the carrier.

https://www.besttruckmanuals.com/

https://www.besttruckmanuals.com/

https://www.besttruckmanuals.com/

https://www.besttruckmanuals.com/

5. Working with a boom extension

5.1 Two-stage swing-away lattice extension (optional equipment)

The 10-m / 16-m (32.8 / 52.5 ft) two-stage swing-away lattice extension is stored at the side of the main boom. To rig the lattice extension it has to be slewed in front of the end of the third telescope section.

- Support the truck crane with the outriggers before you start to install the boom extension (please see Section 4.3.4 "Outriggers").

5.1.1 Installing the 10-m (32.8 ft) swing-away lattice extension on the main boom

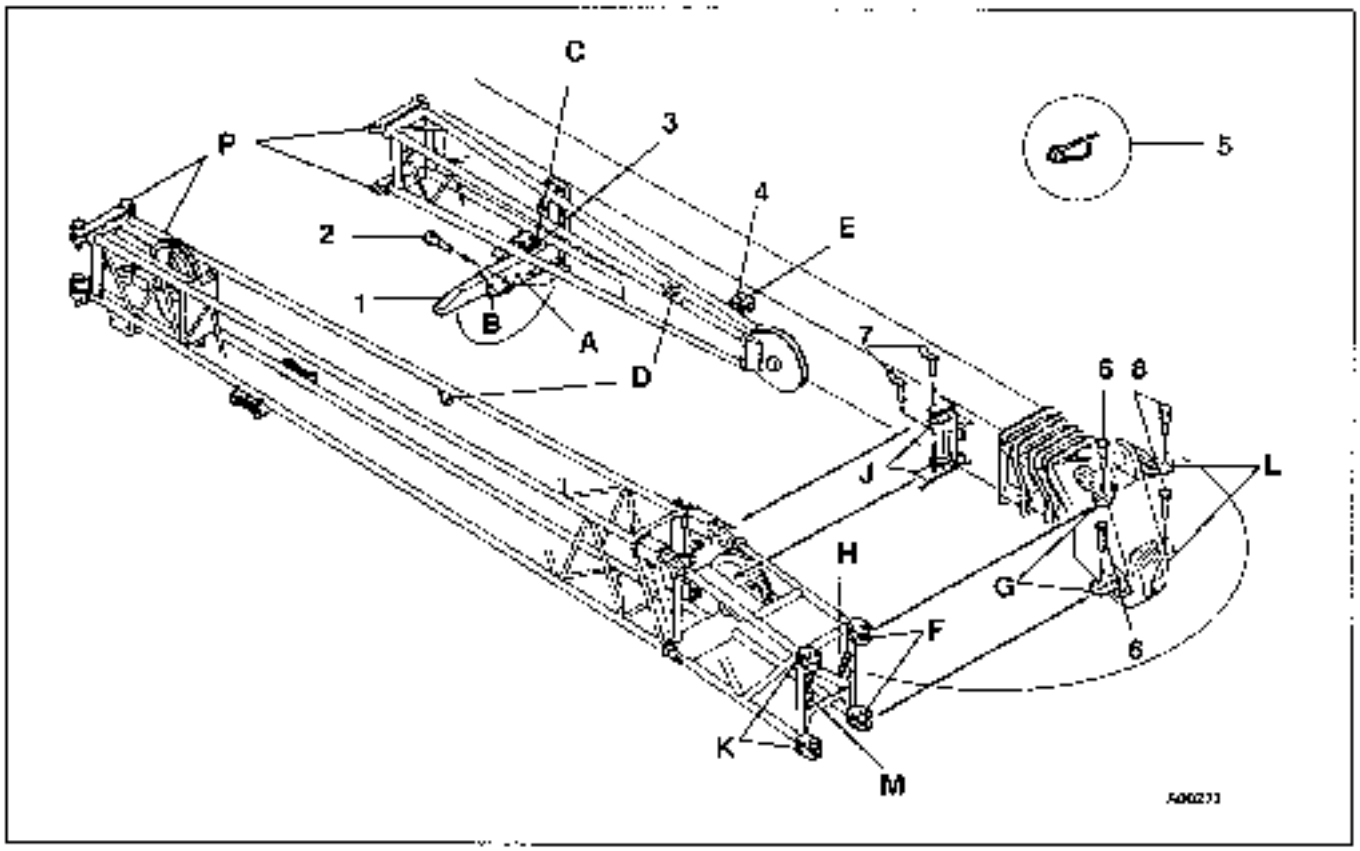

When the 10 m (32.8 ft) lattice extension is used the 6-m (19.7 ft) section remains bolted to the side of the non-telescoping section of the main boom.

- Telescope in (retract) the main boom fully and lower it as far as it will go.
- Unfold the guide rail (1) outwards moving pin (2) from position **A** to position **B**. Secure the pin with a retaining pin (5).
- Check that the 6-m (19.7 ft) lattice extension section is bolted with pin (3) and retaining pin (5) at bearing point **C** on the guide rail.

https://www.besttruckmanuals.com/

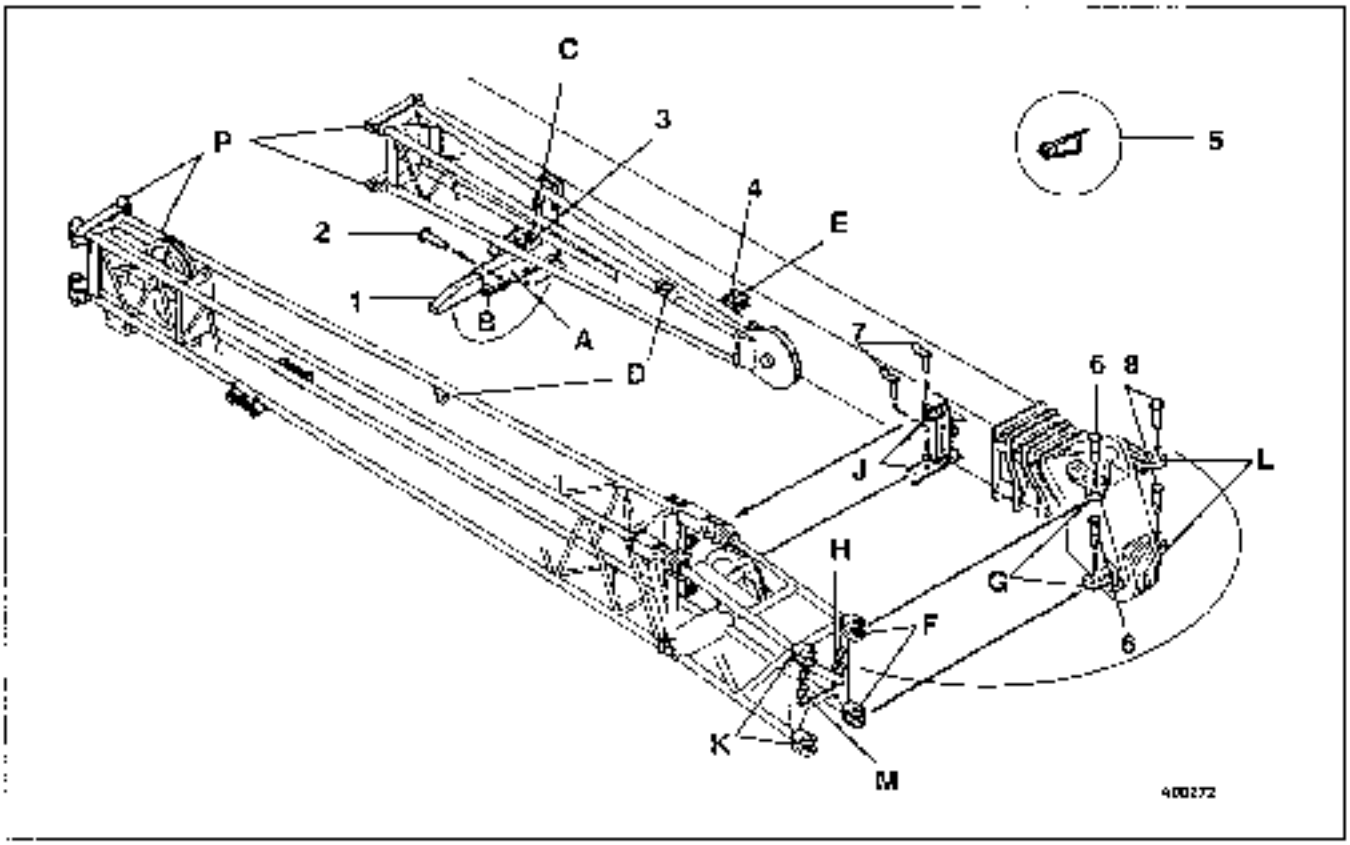

- Check that the cable for the lifting limit switch between the 10-m (32.8 ft) and 6-m (19.7 ft) extension section is disconnected and that the short circuit plug is inserted in the lifting limit switch on the 10-m (32.8 ft) lattice extension.
- Move pin (4) from bearing point **D** and to bearing point **E**. Secure the pin with a retaining pin (5).
- Remove both pins from bearing points **P**. Slew the 10-m (32.8 ft) lattice extension outwards slightly, replace the pins at bearing points **P** and secure the pins with retaining pins (5).
- Swing the 10-m (32.8 ft) swing-away lattice extension out until bores **F** at the foot of the lattice extension are aligned with the bearing points **G** on the main boom.
- Remove both pins (6) from **H**. Insert the pins at the top and bottom of bearing points **F/G** and secure the pins with retaining pins (5).
- Remove both pins (7) from holders **J** and swing the 10-m (32.8 ft) swing-away lattice extension further out. Put the pins back into holders **J** and secure the pins with retaining pins (5).
- Slew the swing-away lattice extension in front of the main boom. The bores **K** at the foot of the lattice extension and the bearing points **L** must be aligned.

Note: To swing the 10-m (32.8 ft) lattice extension round, the truck crane can be tilted with the outrigger cylinders so that the boom is not quite level horizontally. Use a guide rope to swing the lattice extension round safely.

- Remove both pins (8) from the holder **M**. Insert the pins at the top and bottom of bearing points **K/L** and secure the pins with retaining pins (5).

https://www.besttruckmanuals.com/

- Hang a lifting limit switch weight on the lifting limit switch on the 10-m (32.8 ft) lattice extension with a shackle.
- Unscrew the short-circuit plug from the socket on the distribution box on the main boom. Unscrew the plug from the dummy socket at the foot of the 10-m (32.8 ft) lattice extension. Insert the plug into the socket on the distribution box on the main boom
- Screw the short-circuit plug into the dummy socket on the 10-m (32.8 ft) lattice extension.
- Move the anemometer from the main boom to the end of the 10-m (32.8 ft) swing-away lattice extension and secure the anemometer with a retaining pin.
- Screw the anemometer plug into the socket on the distribution box on the end of the 10-m (32.8 ft) swing-away lattice extension.

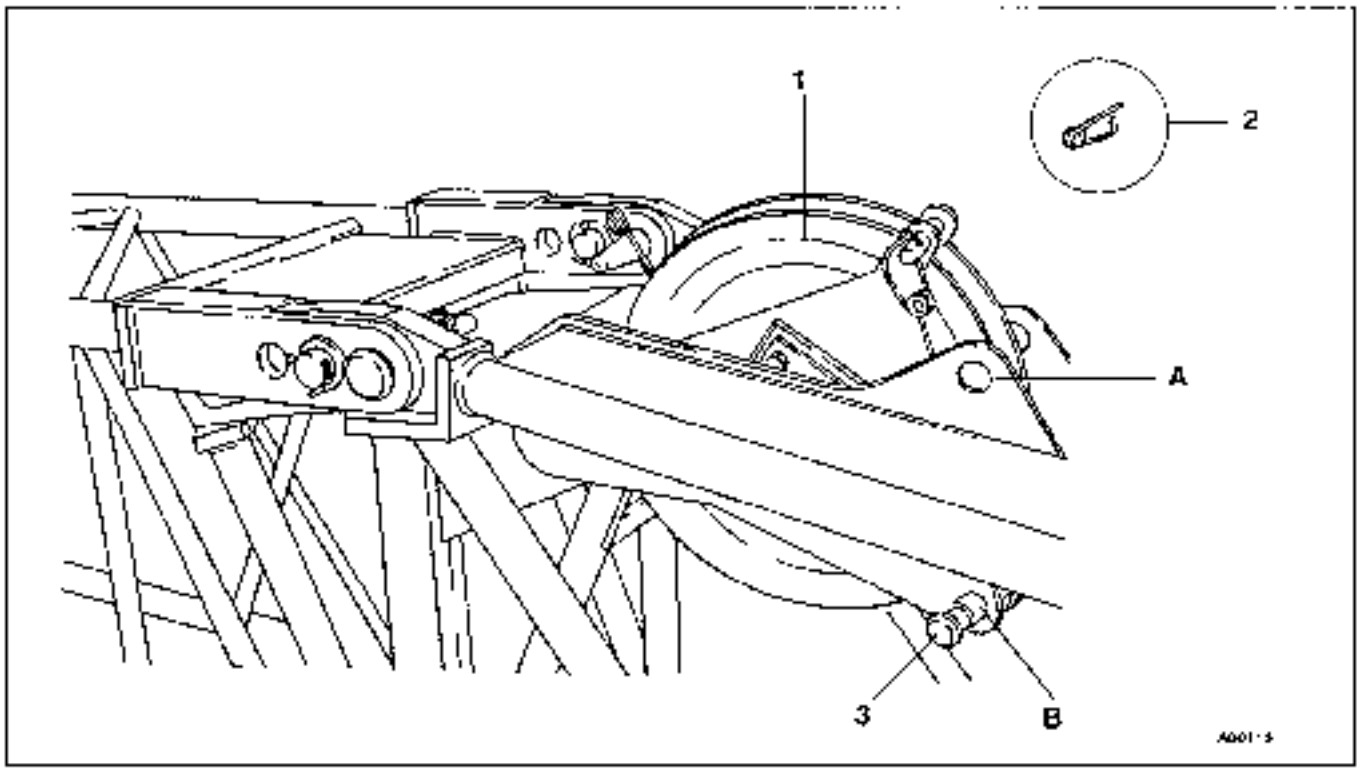

- Remove pin (3) from bearing point **B**.
- Lift the deflection sheave (1) until it can be fixed with pin (3) at bearing point **A**. Secure the pin with a retaining pin (2).
- Unreel the hoist rope from the main or auxiliary hoist. Pass the rope over the deflection sheave at the head of the main boom and over the deflection sheave (1) at the foot of the lattice extension to the head of the 10-m (32.8 ft) lattice extension.
- Lay the hoist rope over both head sheaves.
- Pass the hoist rope through the lifting limit switch weight as described in Section 4.6.2 "Reeving the hoist rope".
- Hook on the hook tackle or hook block. The hoist rope can be reeved once or twice with the 10 m (32.8 ft) lattice extension.

https://www.besttruckmanuals.com/

5.1.2 Installing the 16-m (52.5 ft) two-stage swing-away lattice extension on the main boom

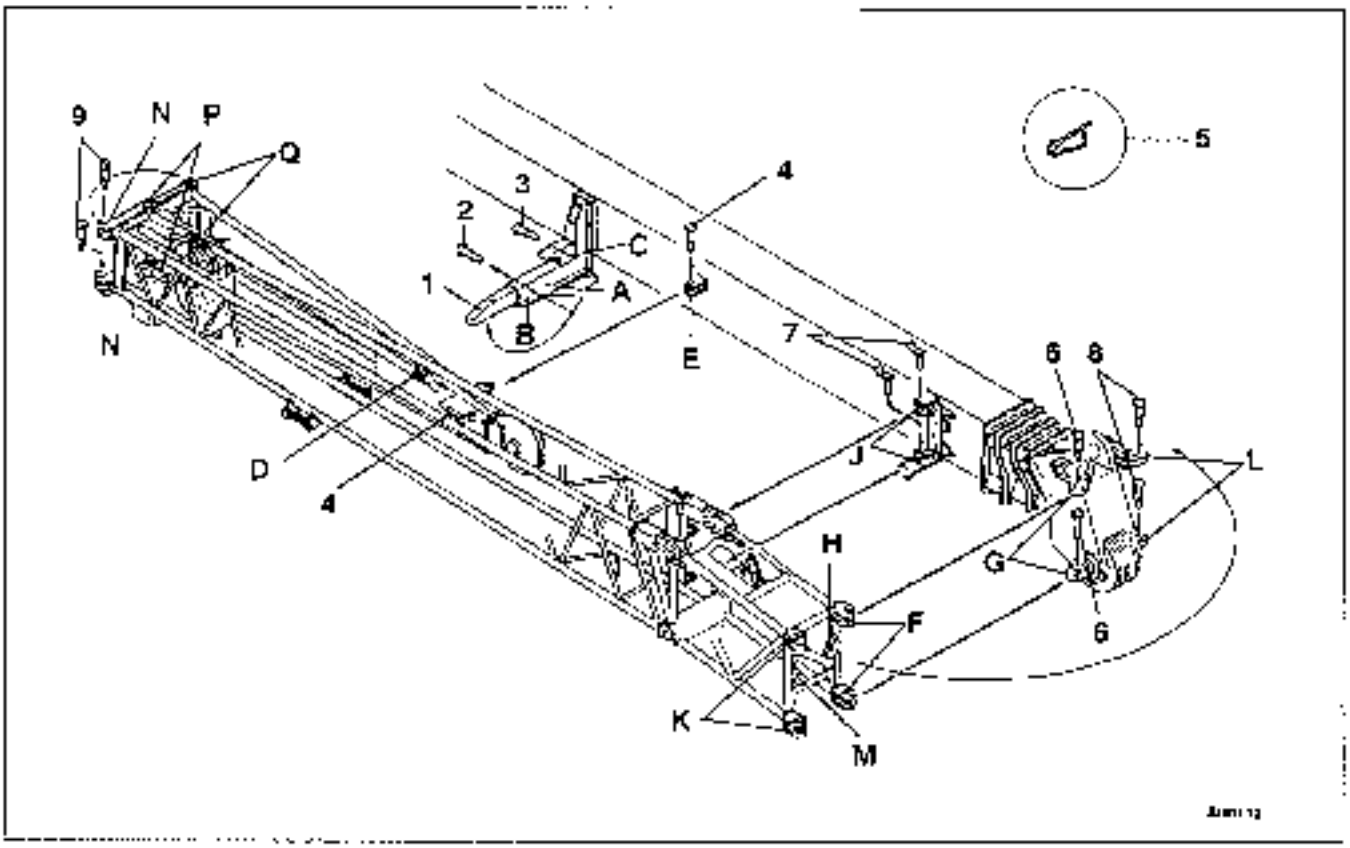

- Telescope in (retract) the main boom fully and lower it as far as possible.
- Fold the guide rail (1) out, removing pin (2) from position A and inserting it at position **B**. Secure the pin with a retaining pin (5).
- Check that the 6-m (19.7 ft) lattice extension section and 10-m (32.8 ft) lattice extension section are bolted together with one pin each at bearing point **P** and that the pins are secured with retaining pins (5).
- Check that the 6-m (19.7 ft) and 10-m (32.8 ft) lattice extension sections are bolted together with pin (4) at bearing point **D**. If not, remove pin (4) from bearing point **E** and reinsert it at bearing point **D**. Secure the pin with a retaining pin (5).
- Remove pin (3) from bearing point **C**.
- Swing the two-stage swing-away lattice extension outwards until bores **F** at the foot of the lattice extension are aligned with bearing point **G** on the main boom.
- Remove both pins (6) from H. Insert the pins at the top and bottom of bearing points **F/G** and secure the pins with retaining pins (5).

https://www.besttruckmanuals.com/

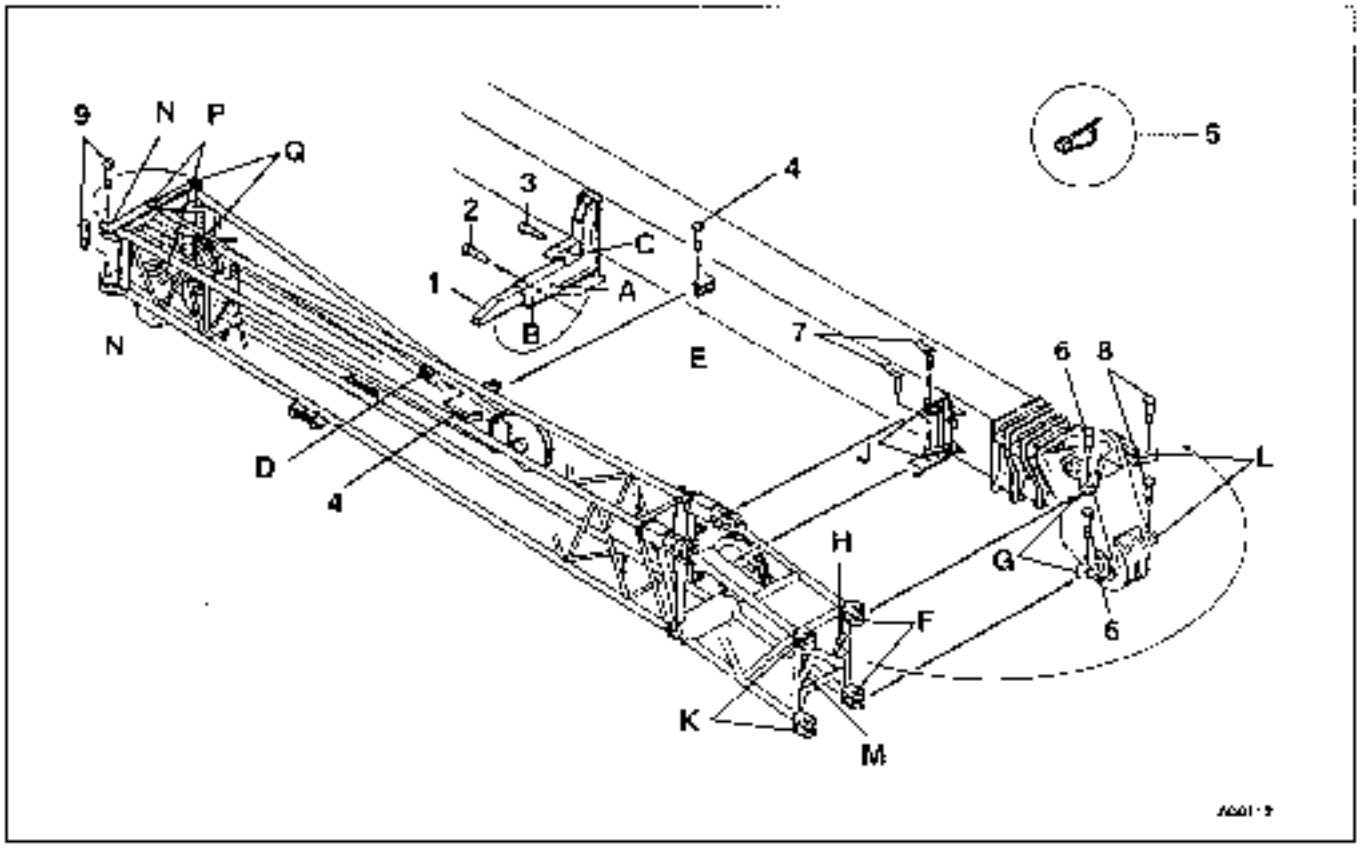

- Remove both pins (7) from holders **J** and swing the two-stage swing-away lattice extension further out. Put the pins back into holders **J** and secure them with retaining pins (5).

- Slew the two-stage swing-away lattice extension in front of the main boom. The bores **K** at the foot of the lattice extension and the bearing points **L** must be aligned.

Note: To swing the two-stage lattice extension round the truck crane can be tilted with the outrigger cylinders so that the boom is not quite level horizontally. Use a guide rope to swing the lattice extension round safely.

- Remove both pins (8) from **M**. Insert the pins at the top and bottom of bearing points **K/L** and secure them with retaining pins (5).

- Unscrew the short-circuit plug from the socket on the distribution box on the main boom. Unscrew the plug from the dummy socket at the foot of the lattice extension. Insert the plug into the socket on the distribution box on the main boom.

- Screw the short-circuit plug into the dummy socket at the foot of the lattice extension.

https://www.besttruckmanuals.com/

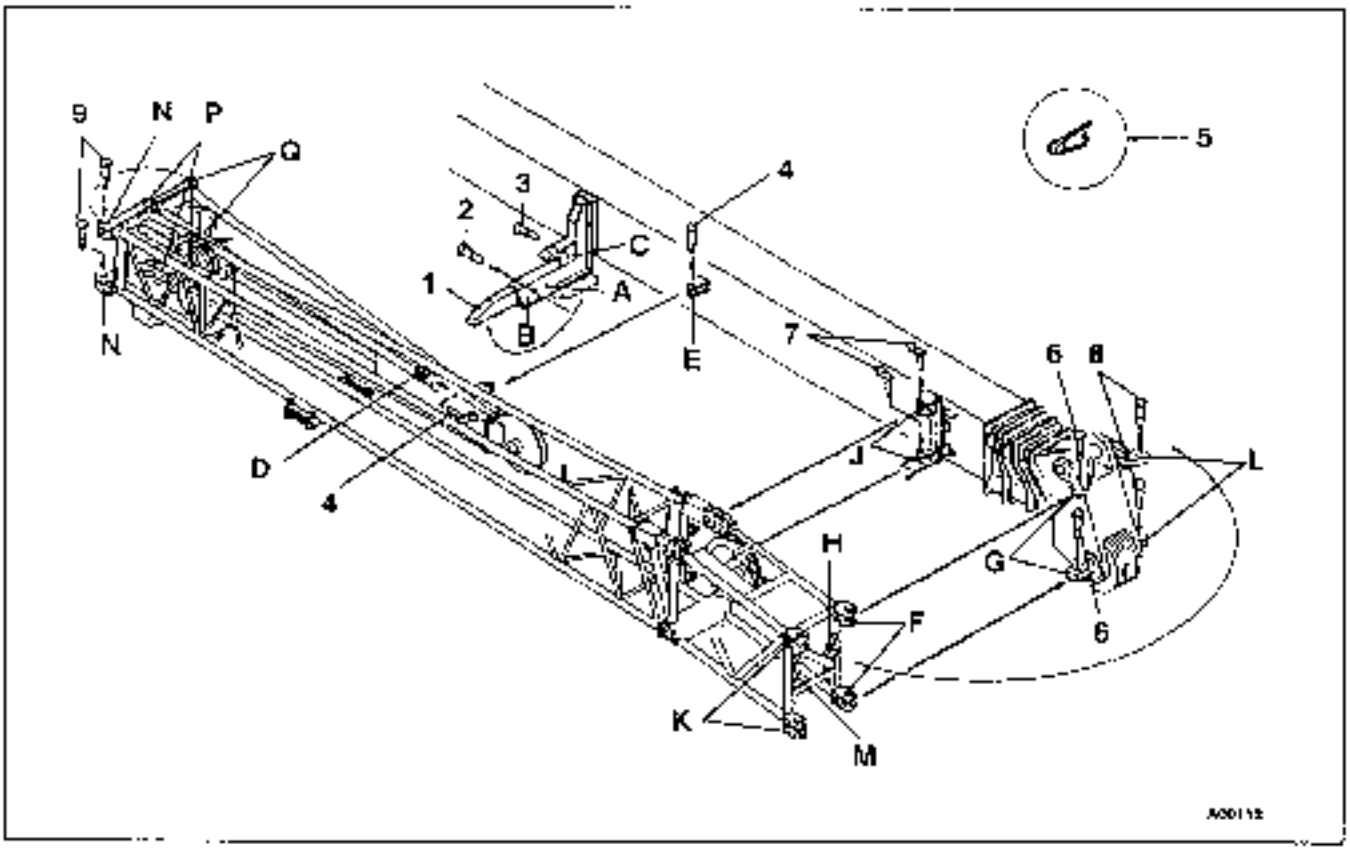

Note: If you want to work with the lattice extension at an angle, you must fill it at this stage (please see Section 5.1.3) before carrying out the steps described below).

- Remove the pin (4) from bearing point **D**, swing the 6-m (19.7 ft) section outwards, reinsert the pin (4) at **D** and secure it with a retaining pin (5).

- Remove both pins (9) from bearing points **N** and swing the 6-m (19.7 ft) lattice extension section in front of the 10-m (32.8 ft) lattice extension section. Bores **Q** at the foot of the 6-m (19.7 ft) lattice extension section and bearing point **N** must be aligned.

Note: To swing the 6-m (19.7 ft) lattice extension round, the truck crane can be tilted with the outrigger cylinders so that the boom is not quite level horizontally. Use a guide rope to swing the lattice extension round safely.

- Insert the pins (9) at the top and bottom of bearing points **N/Q** and secure the pins with retaining pins (5).

- Suspend the lifting limit switch weight from the lifting limit switch on the 16-m (52.5 ft) lattice extension with a shackle.

- Unscrew the plug from the dummy socket at the foot of the 6-m (19.7 ft) lattice extension section and screw it into the socket on the distribution box on the 10-m (32.8 ft) section.

https://www.besttruckmanuals.com/

- Move the anemometer from the main boom to the head of the 16-m (52.5 ft) lattice extension and secure it with a retaining pin.
- Screw the anemometer plug into the socket on the distribution box at the head of the 16-m (52.5 ft) lattice extension.

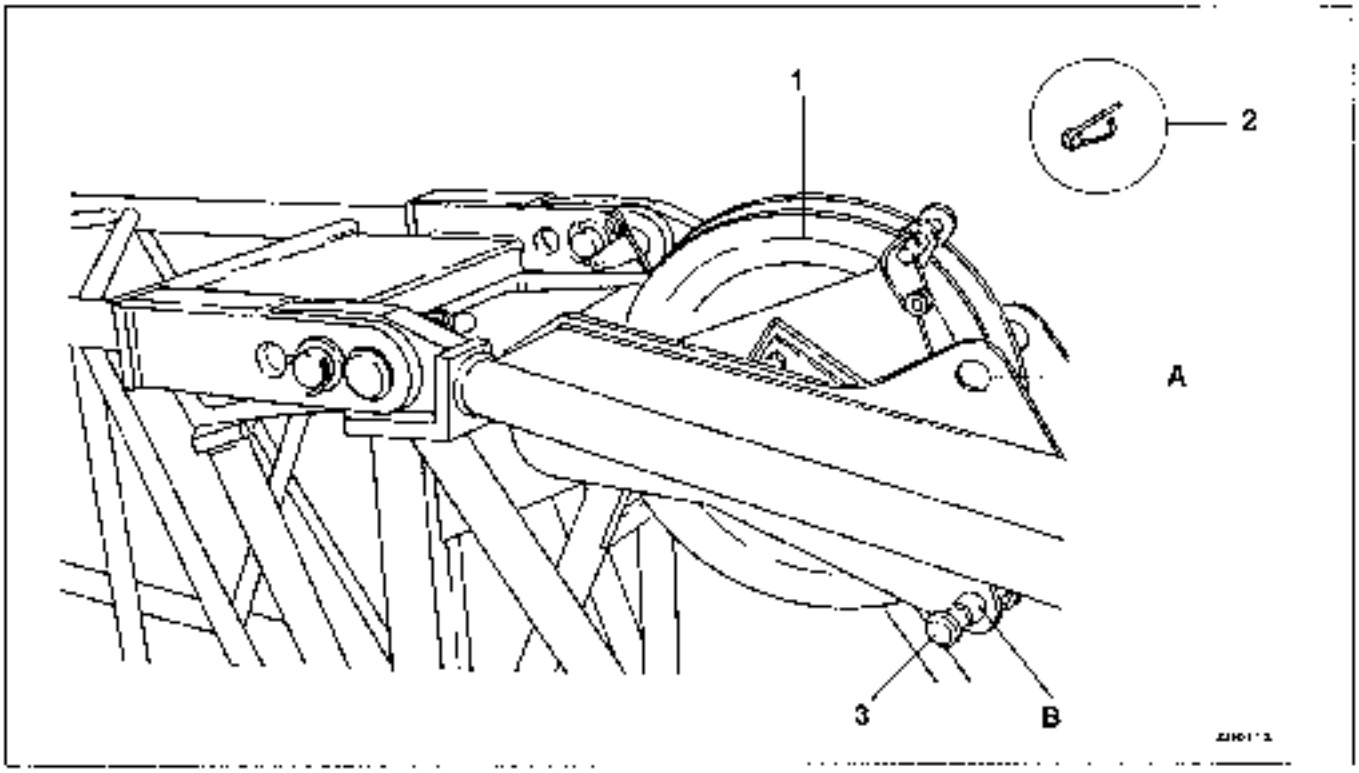

- Remove pin (3) from **B**.
- Lift the deflection sheave (1) until it can be fixed with pin (3) at bearing point **A**. Secure the pin with a retaining pin (2).
- Unreel the hoist rope from the main or the auxiliary hoist. Pass the rope over the deflection sheave on the boom head and over the deflection sheave (1) at the foot of the two-stage swing-away lattice extension.
- Lay the hoist rope over the rear head sheave on the 10-m (32.8 ft) section and over the head sheave on the 16-m (52.5 ft) two-stage swing-away lattice extension.
- Pass the hoist rope through the lifting limit switch as described in Section 4.6.2 "Reeving the hoist rope".
- Hook on the hook tackle. The hoist rope can only be reeved once with the 16-m (52.5 ft) two-stage swing-away lattice extension.

https://www.besttruckmanuals.com/

5.1.3 Inclination of the 10-m (32.8 ft) or 16-m (52.5 ft) two-stage swing-away lattice extension

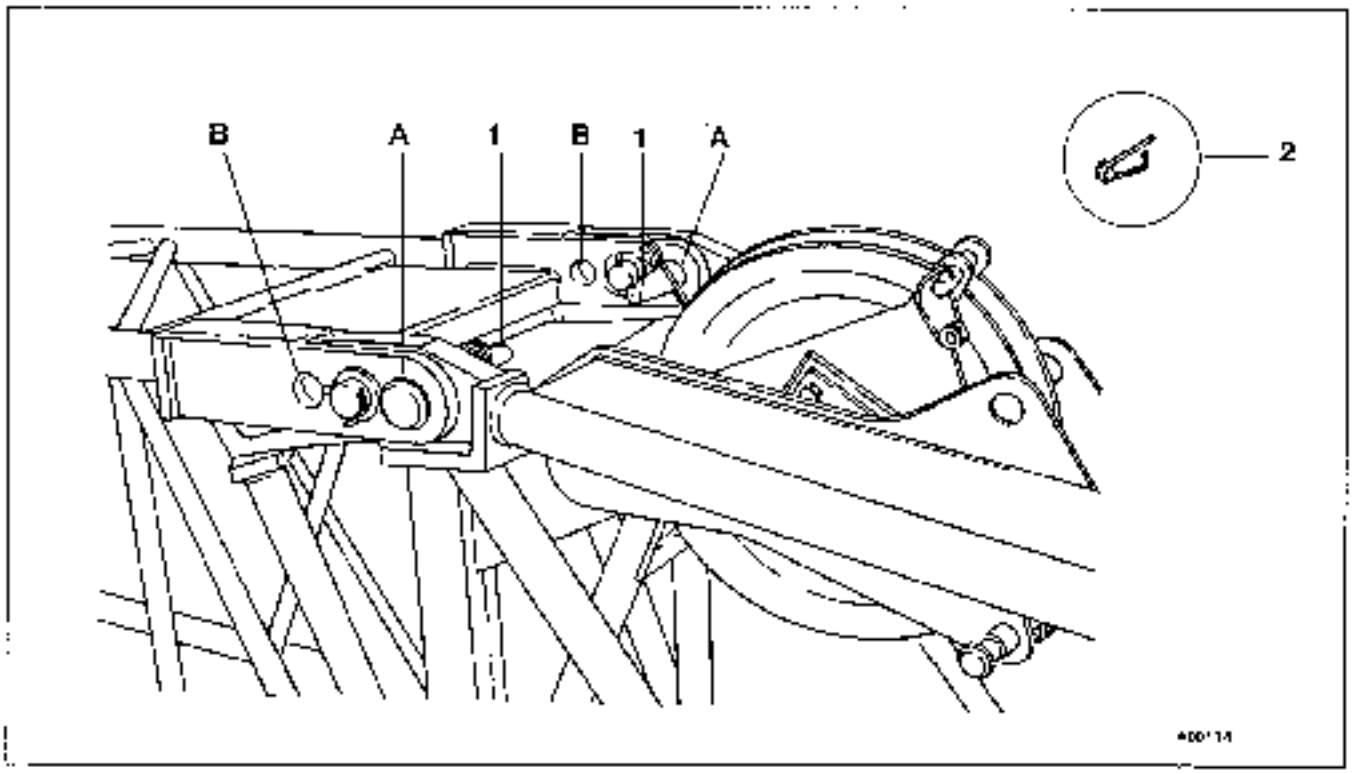

The swing-away lattice extension can be connected to the main boom at two angles:

0° inclination	pin (1) at point **A**
15° inclination	pin (1) at point **B**

Note: The 16 m (52.5 ft) two-stage swing-away lattice extension can only be mounted in the inclined position while the 6-m (19.7 ft) section is still folded against the 10-m (32.8 ft) section. The main boom must be raised so that the swing-away lattice extension does not touch the ground when it is unfolded. The 6-m (19.7 ft) lattice extension section must without fail be held with a guide rope while it is being unfolded.

- Fasten the hoist rope to the head of the 10-m (32.8 ft) swing-away lattice extension. The fixing point is on the upper side of the swing-away lattice extension next to the rear head sheave.
- Pull the hoist rope tight.
- Remove both pins (**1**) from **A**.

https://www.besttruckmanuals.com/

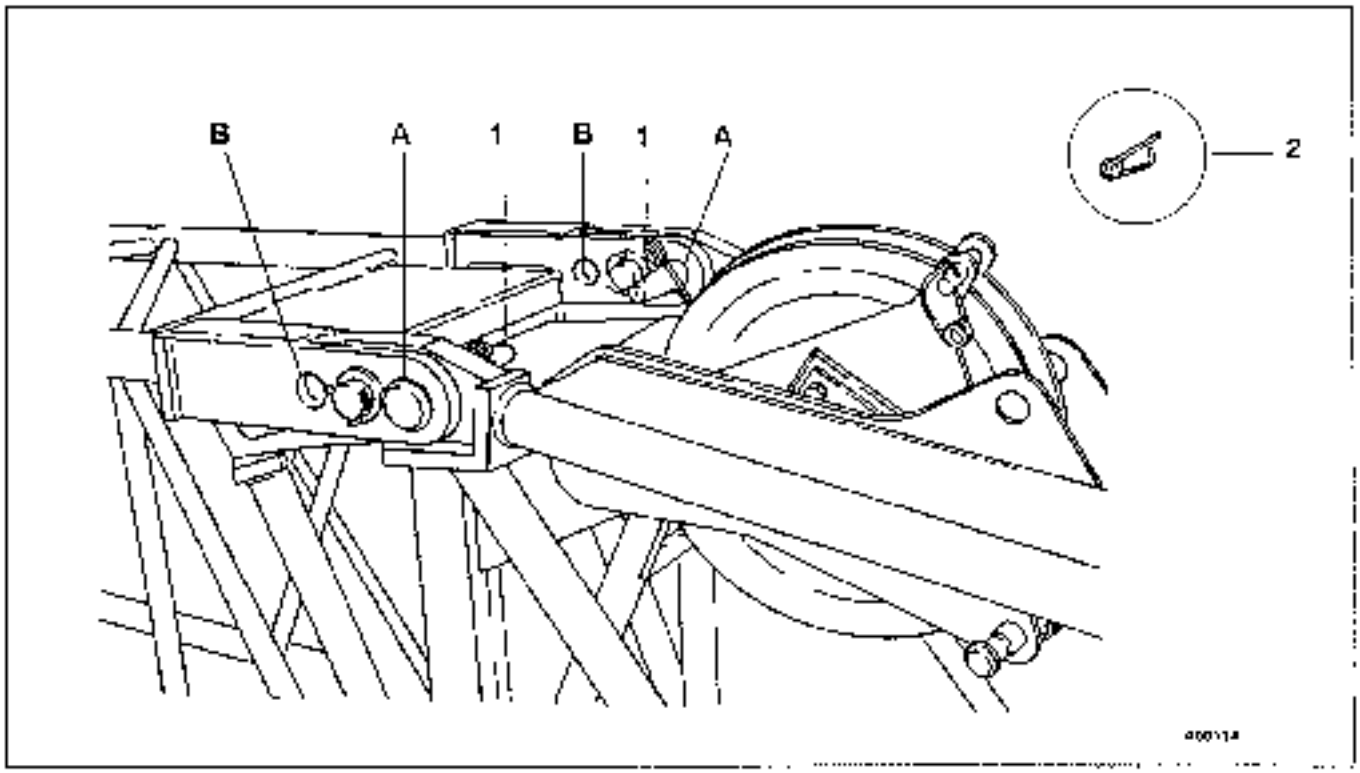

- Lower the swing-away lattice extension fully with the hoist rope.
- Insert both pins (1) at point B and secure the pins with retaining pins (2). The pins act as a backstop.
- Remove the hoist rope from the boom head.

Note: Before the swing-away lattice extension is unrigged it has to be returned to the 0° position. Reverse the steps described above, replacing the pins (1) at point **A** and securing them with retaining pins (2).

5.1.4 Raising the boom

- Set the operating mode on the SLI (length and angle of the lattice extension).
  The SLI codes for the permitted operating modes are listed in the lifting capacity tables.
- Raise the main boom with the lattice extension to at least 45°.
- Telescope out (extend) the main boom to the length stipulated in the relevant lifting capacity table.

https://www.besttruckmanuals.com/

5.1.5 Working with the lattice extension

The movements lifting, lowering, slewing and derricking are carried out as for the main boom.

Caution: It is not permitted to telescope (extend/retract) the main boom while working with the lattice extension.

Caution: If a hook block remains reeved on the main boom the lifting capacity of the lattice extension is reduced

The reduction in the lifting capacity is stated in the notes in the lifting capacity tables.

5.1.6 Unrigging the swing-away lattice extension

- Telescope in (retract) all the telescope sections with the boom raised.
- Lower the main boom to a point where the swing-away lattice extension or two-stage swing-away lattice extension does not touch the ground.

Bring the lattice extension into the 0° position in relation to the main boom (see Section 5.1.3).

Reverse the steps described in Section 5.1.1 or 5.1.2 to fold the swing-away lattice extension sections against the main boom.

https://www.besttruckmanuals.com/

6. Procedure in case of malfunctions

6.1 Malfunctions on the carrier

6.1.1 Electrical equipment

Front instrument panel

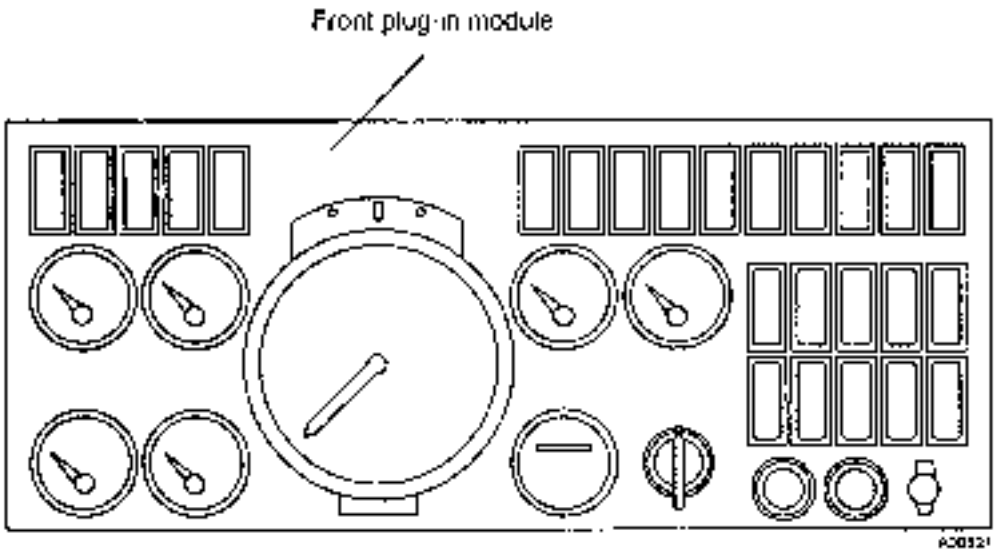

Designation of plug-in module in electric circuit diagram	Function
Front plug-in module	Monitoring of engine and gear units, Start/stop engine, Suspension locking system, Display

https://www.besttruckmanuals.com/

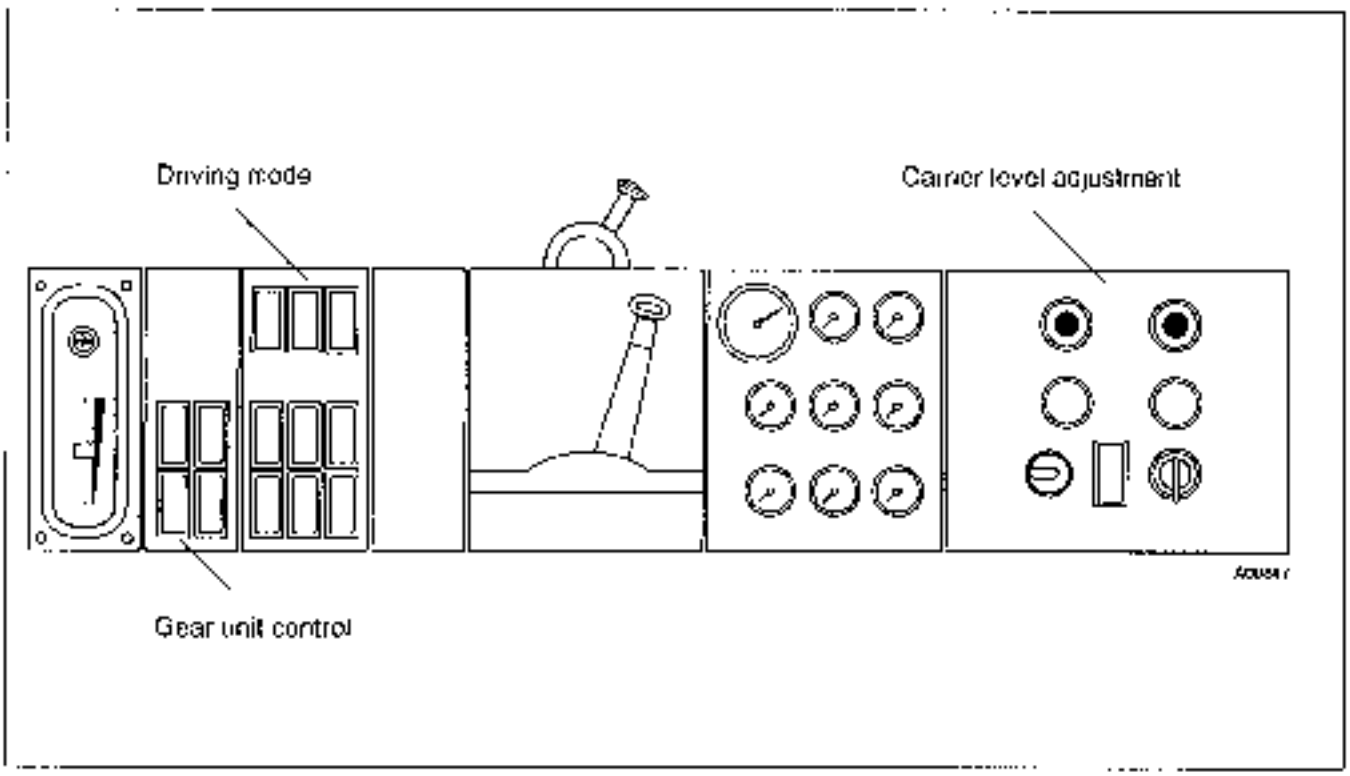

Designation of plug-in module in electric circuit diagram.	Function
Gear unit control	Modes of the gear unit
Driving mode	Transfer case Differential locks
Carrier level adjustment system	Control of carrier level

https://www.besttruckmanuals.com/

Fuse groups F1 to F5

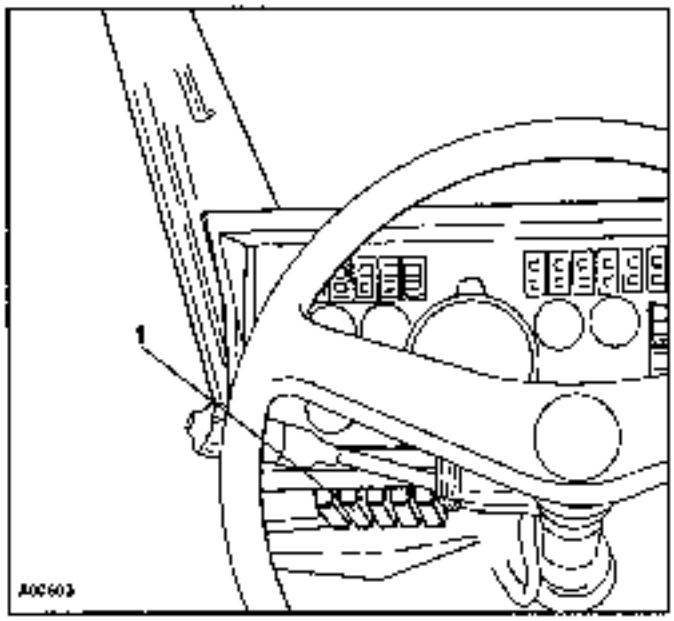

The fuses (1) are on the left next to the steering column under the instrument panel.
The fuses are divided into five groups **F1** to **F5**

Designation in electric circuit diagram: F1	Size (A)	Function
1	3	Tachograph
2	10	Spare
3	10	Start/Stop engine, Suspension locking system, Longitudinal rocking
4	10	Gauges, Tachograph
5	10	Mirror heating, Additional (optional) heating system
6	3	Indicator lamps, Level monitoring for cooling system, Transverse differential locks, Activation of axle line drive

Designation in electric circuit diagram: F2	Size (A)	Function
1	10	Hazard warning lights, Socket
2	15	Rotating warning lights
3	10	Cab lighting, Brake lights
4	10	Horn, Windscreen washing system
5	10	Flasher system
6	10	Heating system blower, Air drier

https://www.besttruckmanuals.com/

Designation in electric circuit diagram: F3	Size (A)	Function
1	10	Full beam - left Fog lamps
2	10	Full beam - right
3	10	Dipped headlight - left
4	10	Dipped headlight - right
5	10	Rear fog lamps
6	10	Voltage divider (24V/12V) (radio, gear unit control)

Designation in electric circuit diagram: F4	Size (A)	Function
1	10	Instrument lighting
2	10	Left parking light. Position lights
3	10	Right parking light
4	10	Position lights on superstructure and boom
5	10	Left tail light and marker light
6	10	Right tail light and marker light

Designation in electric circuit diagram: F5	Size (A)	Function
1	10	Outriggers
2	10	Carrier level adjustment system, Driving mode (differential locks)
3	10	Driving mode (gearbox switching)
4	10	Gear unit control
5	10	Reversing light, Trailer operation (optional equipment)
6	10	Retarder

https://www.besttruckmanuals.com/

6.1.2 Starting the vehicle from another vehicle – charging the carrier battery (optional equipment)

If the carrier battery is flat the engine can be started with the aid of a second vehicle, or the battery can be charged with a battery charger.
A socket can be provided on the truck crane for connecting the jump leads/battery-charger cable (optional equipment). The socket is on the passenger side behind the steps to the driver's cab. Please note that no jump leads/battery-charger cables are supplied with the crane.

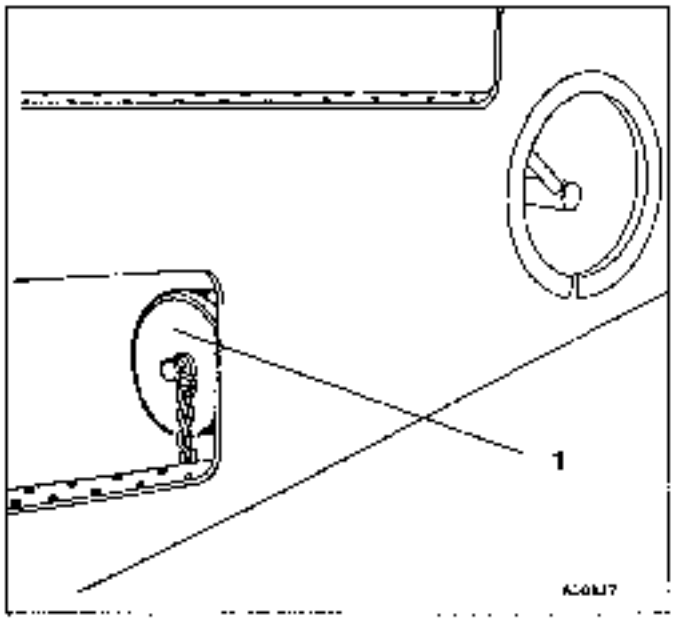

Note: When the vehicle is started from an external source the battery master switch remains switched on.

- For charging the battery the battery master must be switched off and the switch lever removed (please see Section 3.4.8 "Switching on the battery master switch").
- Switch off the additional heating system (please see Section 3.3.4 "Additional water heating system").

Note: If the additional heating system is switched on it takes longer to charge the battery.

- Take the cap off the socket (1) and insert the jump leads/battery-charger cable. The connections are marked plus (+) minus (–)
- Connect the cable to the battery of the second vehicle or to the battery charger.
- Start the engine or charge the battery of the truck crane.

Caution: The current for charging the battery must be below 70 A. Before you charge the battery unscrew the filler plugs on the batteries.
The socket has a maximum current carrying capacity of 70 A.
If the current is above 70 A the socket will get hot and **may catch fire.**

Caution: If the socket is warm to the touch, stop the attempt to start the engine.
The socket will get hot after several attempts to start the engine from another vehicle and **may catch fire.**

- Remove the cable and put the cap back onto the socket

https://www.besttruckmanuals.com/

6.2 Malfunctions on the superstructure

6.2.1 Electrical equipment

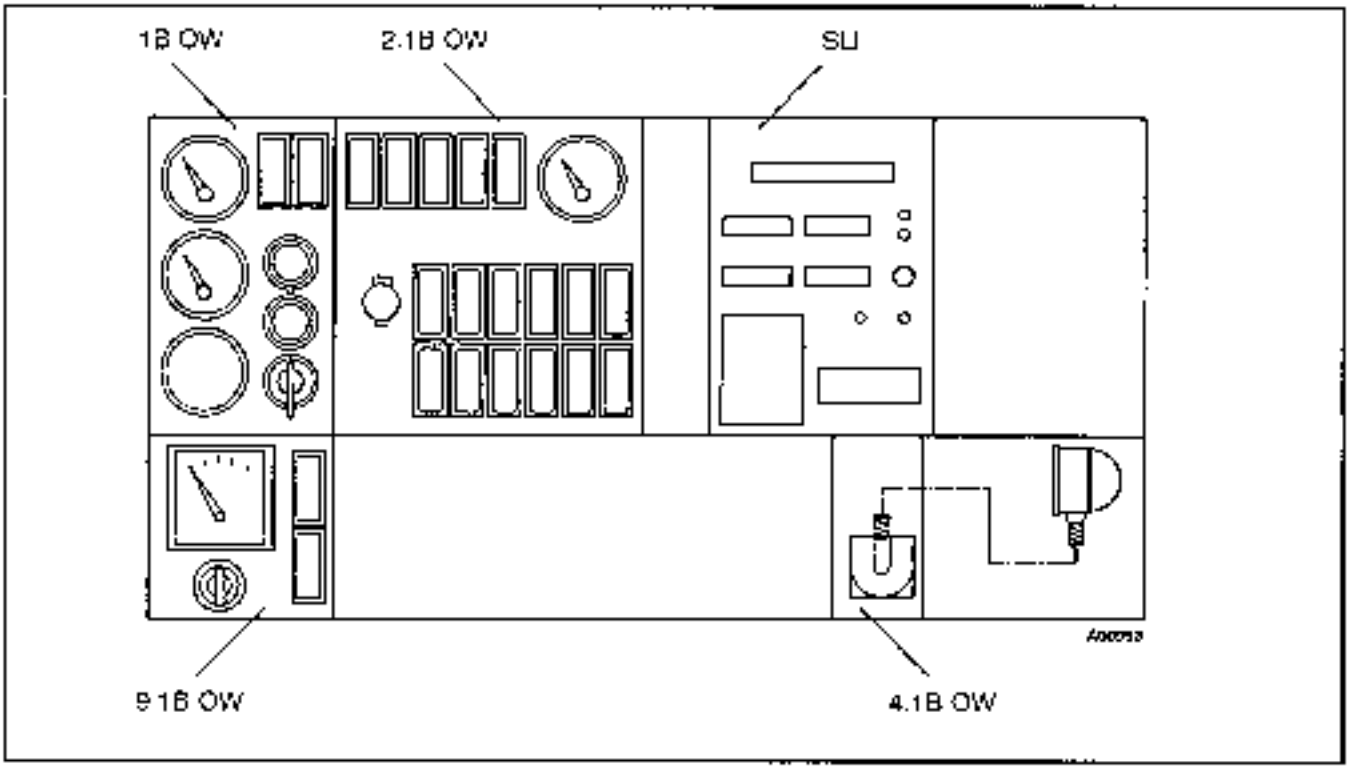

Designation of plug-in module on electric circuit diagram	Function
1B OW	Start/stop engine Engine control
2.1B OW	Monitoring of hydraulic system, Spotlights, Windscreen wipers

Designation of plug-in module on electric circuit diagram	Function
9.1B OW	Anemometer, SLI
4.1B OW	Hydraulic system control, Fast speed

https://www.besttruckmanuals.com/

Fuse groups F1 to F3

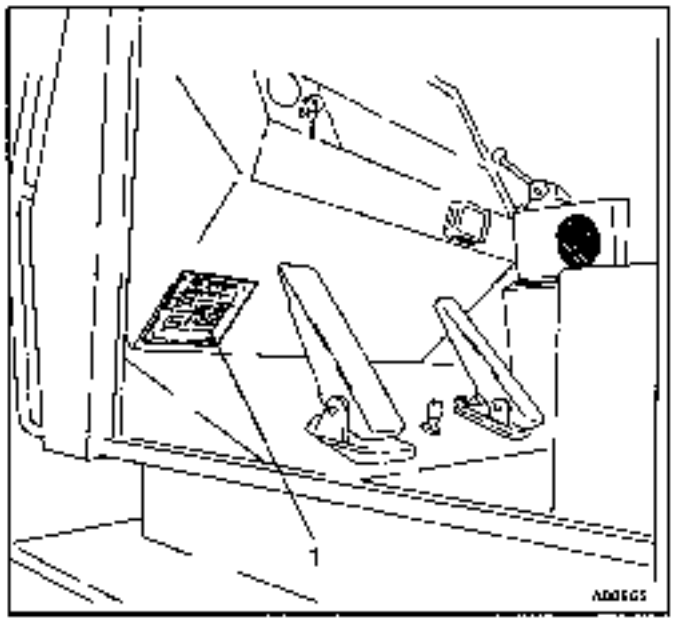

The fuses are on the left under the instrument panel. The fuses are divided into three groups, **F1** to **F3**

Designation in electric circuit diagram: F1	Size (A)	Function
1	20	Oil cooler (optional equipment)
2	20	Oil cooler (optional equipment)
3	10	Cab lighting, Socket
4	20	Start/stop engine, Additional heating system (optional equipment)
5	3	Instrument lighting, Position lights for indicator lamps
6	3	Indicator lamps, Instrument lighting

Designation in electric circuit diagram: F2	Size (A)	Function
1	20	Spotlight for working area
2	15	Windscreen wipers, Windscreen washing system, Washer pump, Intermittent wiper position, Additional heating system (optional equipment)
3	15	Blower for heater
4	10	Horn, Line for horn push button in control lever
5	10	Air drier, Oil cooler
6	15	Voltage supply - fuse group F3

https://www.besttruckmanuals.com/

Designation in electric circuit diagram: F3	Size (A)	Function
1	10	Dead man's switch
2	10	Counterweight lifting gear. Line for safety circuits
3	10	Derricking gear, Main hoist
4	10	Auxiliary hoist. Fast speed
5	10	Rope winch synchro
6	3	SLI line

https://www.besttruckmanuals.com/

6.3 System for tipping the driver's cab

Caution: Before the driver's cab is tipped the following must be carried out:

All loose objects must be removed from the driver's cab.

The boom must be raised far enough for the cab to clear it when it is tipped.

It must be ensured that the hook block is at a safe distance from the windscreen when the cab is tipped

The manual pump for tipping the driver's cab is in front of the steps underneath the door on the right-hand side of the driver's cab. The cab locking system unlocks automatically when the pump is operated.

Tipping the driver's cab

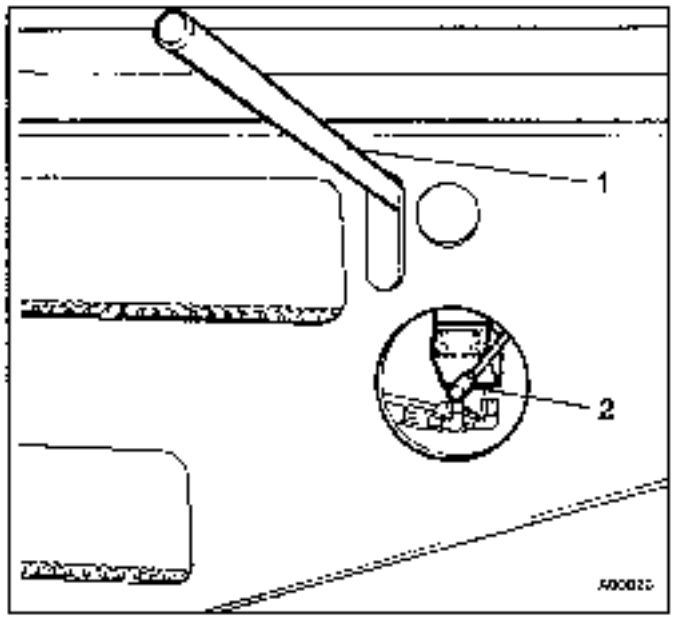

- Fit the pump lever (1) onto the manual pump.
- The pump lever is supplied with the crane in the tool box
- Turn the change-over lever (2) to the right
- Raise the driver's cab with the manual pump until it tips forwards under its own weight and the lifting cylinder is under tension.

Caution: When the driver's cab is tipped the angle of the wheels must not be changed, otherwise the universal joint on the angle gear in the steering system may break.

Danger: No persons are allowed to be underneath the driver's cab while it is tipped unless the lifting cylinder is under tension from the cab.

https://www.besttruckmanuals.com/

Lowering the driver's cab

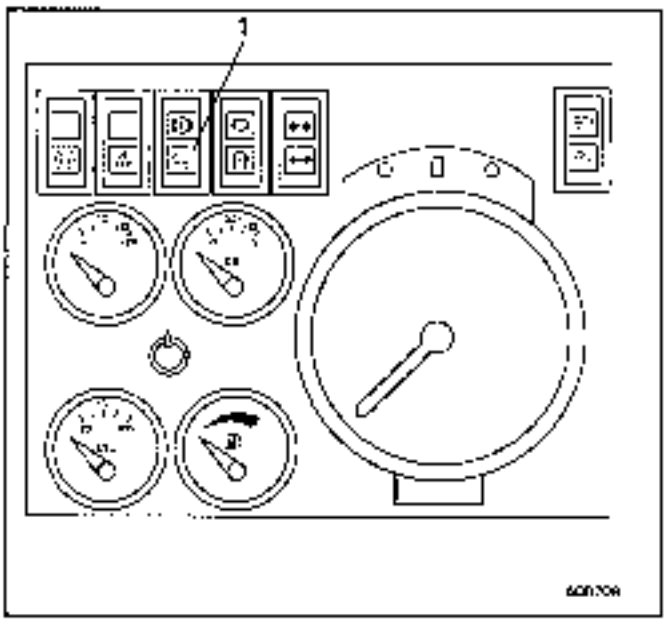

- Turn the change-over lever on the manual pump to the left.
- Lower the driver's cab with the manual pump. Keep on pumping until you can feel the resistance of the pump.

Caution: The warning light (1) for the driver's cab locking system must not be on when the ignition is switched on.

https://www.besttruckmanuals.com/

7. Servicing and maintenance

Please refer to the enclosed servicing and maintenance instructions for parts manufactured by our suppliers (engine, gearbox), as these are not included in the instructions below.

7.1 Cleaning your truck crane

During the first few months the paint of your truck crane will still be fairly soft. Do not use high-pressure or steam cleaning equipment during this time.
When the paint has hardened you should still avoid using water hotter than 60°C (140°F). Do not use aggressive cleaning agents. Never direct the jet of your cleaning equipment at right angles to the surface being cleaned, and never apply it too close to the surface.

Do not forget that you should wear a safety mask while you are cleaning the crane.

https://www.besttruckmanuals.com/

7.2 General notes on maintenance

Help to increase the life of your crane and maintain its availability by servicing it and carrying out maintenance work regularly and meticulously

Krupp Industrietechnik GmbH cannot accept claims under the warranty if the crane is not handled correctly.

Inspections must be carried out at regular intervals. If possible servicing should be carried out by Krupp's service mechanics

1st inspection after 100 operating hours or 4000 km (2486 miles)
2nd inspection after 500 operating hours or 20 000 km (12 427 miles).
Further inspections every 500 operating hours or 20 000 km (12 427 miles).

The number of kilometres the crane has been driven is shown on the tachograph in the driver's cab.

The number of operating hours is shown on the operating hour counters in the driver's cab and crane operator's cab

Note:

- Hydraulic hoses should not be used for longer than 6 years from the date of manufacture. The date of manufacture (month and year) is marked on the hose fitting.
- Inspection and maintenance work must be carried out in accordance with Sections 7.3.1 to 7.3.7. Always include the work to be carried out at shorter intervals in the work which is carried out at longer intervals.
- Observe the running-in times for components which have been replaced (please see instructions for repairs).
- Carry out maintenance work on the engine as stipulated in Mercedes-Benz's operating and maintenance instructions.
- Change the oil and apply lubricant as stated in the schedule in Sections 7.4 and 7.5.
- The Krupp telescopic crane KMK 5090 is designed for erection work and not for loading and unloading duties.

  If jobs of a similar nature to loading and unloading are carried out, e.g. pouring concrete from buckets, it is essential to carry out the inspection and maintenance work every 1000 operating hours. The hoist gear unit must be checked during this inspection to find out whether it has been affected by the dynamic loads.

https://www.besttruckmanuals.com/

7.3 Routine work

7.3.1 Daily inspection and maintenance work

- Check the oil level in both engines with the dipsticks (please see Mercedes Benz's operating and maintenance instructions).
- Check the cooling water (reservoirs on the right-hand side behind the driver's cab and on the right-hand side of the turntable above the cooler for the engine coolant).
- Check that all lights and switches are working.
- Check the engines' dry air filters.
  If the indicator lamps are on, clean or replace the filters (please see Mercedes Benz's operating and maintenance instructions).
- Check the oil level in the automatic gearbox with the dipstick.

7.3.2 Weekly inspection and maintenance work

- Carry out a visual inspection of the engines, axle lines, gearbox and transfer case, checking for leaks and inspecting their general condition.
  Repair any leaks and check the oil level.
- Check that all axle lines are functioning correctly
- Check the compressed-air and hydraulic systems for leaks.
  Repair any leaks.
- Drain moisture from the compressed air reservoir
- Check the oil level in the crane's hydraulic oil tank on the superstructure through the inspection glass (the truck crane must be in the correct condition for driving on roads, i.e. **transport condition**)
- Check the oil level in the carrier's hydraulic tank through the inspection glass
  (the truck crane must be in the correct condition for driving on roads, i.e. **transport condition**).
- Check the tyres for damage and ensure that they have sufficient tread. Check tyre pressures.

Tyres	Air pressure	Air pressure
14.00 R 24 (optional equipment)	10.0 bar	145.0 psi
16.00 R 25	9.0 bar	130.5 psi
20.5 R 25 (optional equipment)	7.0 bar	101.5 psi

Note: When you buy new tyres please note that they must be for the same load as the original tyres, which means that the tyre pressures will also be the same.

https://www.besttruckmanuals.com/

- Check the oil level in the main hoist and auxiliary hoist (optional equipment) with the dipsticks.
- Check the oil level in the slew gear through the inspection glass
- Check that the carrier's windscreen washing system is working, and check the level of the washing water in the reservoir on the carrier behind the front grille.
- Check that the superstructure's windscreen washing system is working, and check the level of the washing water in the reservoir behind the crane operator's cab.
- Check the condition of the hoist ropes.

7.3.3 Monthly inspection and maintenance work

The work listed below must be carried out after approx. 100 operating hours or 4000 kilometres (2486 miles):

- Check that the wheel nuts are tight (Please see Section 8.2.8 for the correct tightening torques).
- Check the acid level in the batteries.
- Check the oil level in the central axle drive units and wheel drives.
- Bleed the derricking cylinder, telescope cylinders, and suspension cylinders.
- Drain the sediment from the fuel tanks.
- Run through all the functions of the carrier level adjustment system.

7.3.4 Quarterly inspection and maintenance work

The following work must be carried out after approx. 250 to 300 operating hours or 10 000 to 12 000 kilometres (6214 to 7456 miles):

- Clean the vent filters in the hydraulic oil tanks.
- Clean the drain valves for the compressed air reservoirs.
- Check the brake linings on the carrier.

https://www.besttruckmanuals.com/

7.3.5 Half-yearly inspection and maintenance work

The following work must be carried out after approx. 500 to 600 operating hours or 20 000 to 25 000 kilometres (12 427 to 15 534 miles):

- Check that the attachment bolts for the ball bearing slewing rim are tight (for tightening torque please see Section 8.3.6).
- Check that the attachment bolts for the steering system and suspension system are tight. (For tightening torque, please see Section 8.4)
- Check the pressure accumulators in the suspension system.

7.3.6 Annual inspection and maintenance work

The following work must be carried out after approx. 1000 to 2000 operating hours or 40 000 to 50 000 kilometres (24 855 to 31 069 miles):

- Have the hydraulic oil checked
- Change the hydraulic oil filters.
- Check the play of the wheel bearings in the wheel head assemblies on all axle lines.
- Change the filter for the Allison power shift gear.
- Change the granulate cartridge for the air drier in the compressed air systems.

7.3.7 Inspection and maintenance work every two years

The following work must be carried out after approx. 2000 to 2400 operating hours or 80 000 to 100 000 kilometres (49 709 to 62 137 miles):

- Check the condition of the hoses in the hydraulic systems. Any hoses which are not in good condition must be replaced immediately. Please note the information on how long hoses can be used in Section 7.2 "General notes on maintenance".
- Have the brake cylinders checked by a brake service station.
- Check the Perrot brake expanding wedge device on the wheel brakes for wear.
- Check the compressor valve inserts.

https://www.besttruckmanuals.com/

7.4 Changing the oil

7.4.1 Oil change for carrier

(h = Operating hours; 1h = 40 km (25 miles) driving distance)

Components	Amount **** litres	Amount **** gal	Designation *	Intervals (h) 20	50	100	500	1000
• Diesel engine (OM 442 LA)	30.0	7.9	***			***		
• Engine cooling water	92.0	24.3	***			***		
• Automatic gearbox incl. oil cooler	65.0	17.2	F1	1st				X
• Transfer case	15.0	4.0	E3	1st			X	
• Pump distributor gear	1.5	0.4	E3					X
• Axle lines								
– per wheel drive	3.5	2.8	E3				X	
axle central drives								
2nd line	13.0	3.4	E3				X	
3rd line	15.0	4.0	E3				X	
4th line (only for drive 10x8)	16.5	4.4	E3				X	
5th line	13.0	3.4	E3				X	
• Angle gear, steering	0.2	0.05	F1					X
• Hydraulic system, steering**	270.0	71.3	G2					X

1st = 1st inspection

* = Please see Section 7.6 'Lubricant table'

** = Have an analysis carried out by an oil company beforehand to find out whether an oil change is necessary.

*** = As stated in Mercedez Benz's operating and maintenance instructions

**** = These are approximate values. Exact values are obtained with the aid of the oil level inspection screws, the oil dipsticks or the oil level indicators

In tropical countries oil changes should be carried out after every 200 h or 10 000 km (6214 miles), and at least once a year.

https://www.besttruckmanuals.com/

7.4.2 Oil change for superstructure

(h = operating hours)

Components	Amount **** l	Amount **** gal	Designation *	Intervals (h) 20	50	100	500	1000
• Diesel engine (OM 366)	17.5	4.6	***			***		
• Engine coolant	60.0	15.9	***			***		
• Main hoist gear	1.3	0.3	E3				1st	X
• Auxiliary hoist gear	1.3	0.3	E3				1st	X
• Slew gear	2.9	0.8	E3				1st	X
• Hydraulic system **	1200	31.2	G2					X

1st = 1st inspection

* = Please see Section 7.6 "Lubricant table"

** = Have an analysis carried out by an oil company beforehand to find out whether an oil change is necessary.

*** = As stated in Mercedez Benz's operating and maintenance instructions

**** = These are approximate values. Exact values are obtained with the aid of the oil level inspection screws, the oil dipsticks or the oil level indicators

In tropical countries oil changes should be carried out after every 200 h or 10 000 km (6214 miles) and at least once a year.

https://www.besttruckmanuals.com/

7.5 Lubricating schedule

(h = Operating hours: 1h = 40 km (25 miles) driving distance)

Components	No. of components	No. of lubricating points			Lubricant Designation *	Intervals (h)
		left	middle	right		
Carrier						
- Suspension cylinders	10	5		5	J	30
– Cardan shaft between engine and pump distributor gear	1		2		K	600
For drive 10 x 6:						
Cardan shafts between gear units and axle lines	5		10		K	600
– Cardan shafts, 2nd and 3rd axle lines	4	4		4	K	100
– Cardan shafts, 5th axle line	2	2		2	K	100
For drive 10 x 8 (optional equipment):						
– Cardan shaft between gear units and axle lines	3		6		K	600
– Cardan shafts 2nd and 3rd axle lines	4	4		4	K	100
– Cardan shafts 4th and 5th axle lines	4	4		4	K	100
– Steering system reversing lever	3	3			J	300
- Outrigger beam sliding surfaces (apply with a brush)	8	4		4	L1	100
– Spare wheel winch	1			1	J	600
– Door hinges	4	2		2	J	100
– Winches	div.				M	100
Connecting bolts and socket pins	div.	x	x	x	J/M	100

* please see Section 7.6 "Lubricant table"

https://www.besttruckmanuals.com/

(h = Operating hours; 1 h = 40 km (25 miles) driving distance)

Components	No. of components	No. of lubricating points			Lubricant Designation *	Intervals (h)
		left	middle	right		
Superstructure						
– Ball race slewing rim (central lubrication device)	1				J	300
– Gear rim, slewing rim	1				V	600
– Slewing gear pinion	1			1	V	600
– Main hoist	1			1	J	300
– Auxiliary hoist	1			1	J	300
– Pins on foot of boom	1	1		1	J	300
Cab door rollers	1	3			M	100
– Winches	div				M	100
– Connecting pins and locking pins	div.				J/M	100
– Sliding surfaces at top of telescopic boom (lubricant nipple)	6	3		3	L2	600
– Sliding surfaces at bottom of telescopic boom (apply thinly with spatula)	6	3		3	L2	600

* please see Section 7.6 "Lubricant table"

https://www.besttruckmanuals.com/

7.6 Lubricant table

Designation	Lubricating point	Type of lubrication	Designation acc. to DIN 51502	Specification Classification	Lubricant type Viscosity range
A	Diesel engine	Oil bath lubrication	HD-CD	MIL-L 2104C DB 227 1 228.1	*
E1	Gear units		C-LP	MIL-L 2105 API-GL-4	SAE 80 ISO-VG 150
E3			C-LPF	MIL-L 2105B API-GL-4	SAE 90 ISO-VG 220
F1	Automatic gearbox		ATF	ATF II	
G2	Hydraulic system	Oil fill	H-LP	DIN 51524 T.2	ISO-VG 32
J	General lubrication point	Grease gun and by hand	K-L2K	DIN 51825	
K	Antifriction bearings	After repairs greased before replacement	KP-L2K	DIN 51825	
L1	Slides	After repairs greased before replacement		DIN 51513	8B 8B-V
L2			VOLER VGLG 1 Fett Krupp Part No. 1929 824 **		
M	Other lubrication points	Oil can	as "A" Diesel engine		
V	Open gear wheels	Contact lubrication	VOLER-COMPOUND-2000 ES Krupp Parts No. 0554 205 **		
W	Installation of bolts, pins, bushes, etc.	Contact lubrication	VOLER A. C. Spray Krupp Parts No. 1573 046 **		

* Please see Mercedes Benz's operating and maintenance instructions

** Can be supplied by Krupp Cranes Division

https://www.besttruckmanuals.com/

7.7 Laying-up and conservation

The following must be carried out if the truck crane is not going be used for a long period

7.7.1 Work before laying-up

- Clean the crane thoroughly inside and outside.
- Remove rust.
- Touch up the paintwork.
- Parts which are not painted must be greased with an acid-free grease or oiled.
- Fill up the fuel tank.
- Seal all air filters so that they are airtight.

7.7.2 Work during stoppages

- Carry out the checks stipulated in Sections 7.3.3 to 7.3.7.
- Keep the fuel tank full.
- Check the battery regularly and recharge it if necessary using another current source or battery charger.
- Increase the tyre pressure by about 10 %; check the tyre pressures regularly.
- Run through all driving and crane movements a few times every two weeks (road test and operating test).

Ensure that the carrier is parked so that a different part of the tyres is in contact with the ground each time to prevent permanent deformation of the tyres.

Instead of carrying out a road test it is also possible to jack the vehicle up to run through the functions

During the operating test run the hydraulic system until it is warm (+50°C = 122°F) .

Caution: All air filters must be opened for the last runs and sealed again after the systems have cooled down.

https://www.besttruckmanuals.com/

https://www.besttruckmanuals.com/

8. Technical data

KRUPP TRUCK CRANE KMK 5090

Max. lifting capacity:	90 t (198 400 lbs) according to DIN 15019.2
Temperature range:	–25°C bis +40°C (-13°F to +104°F)

8.1 Dimensions

Length:	15.34 m (50.44 ft)
Width:	3.00 m (9.84 ft) 3.07 m (10.07 ft) with 20.5 R 25 tyres (optional equipment)
Height:	3.75 m (12.30 ft) with -130 (-5.12 in) to +170 mm (+6.69 in) suspension range (on-road level)

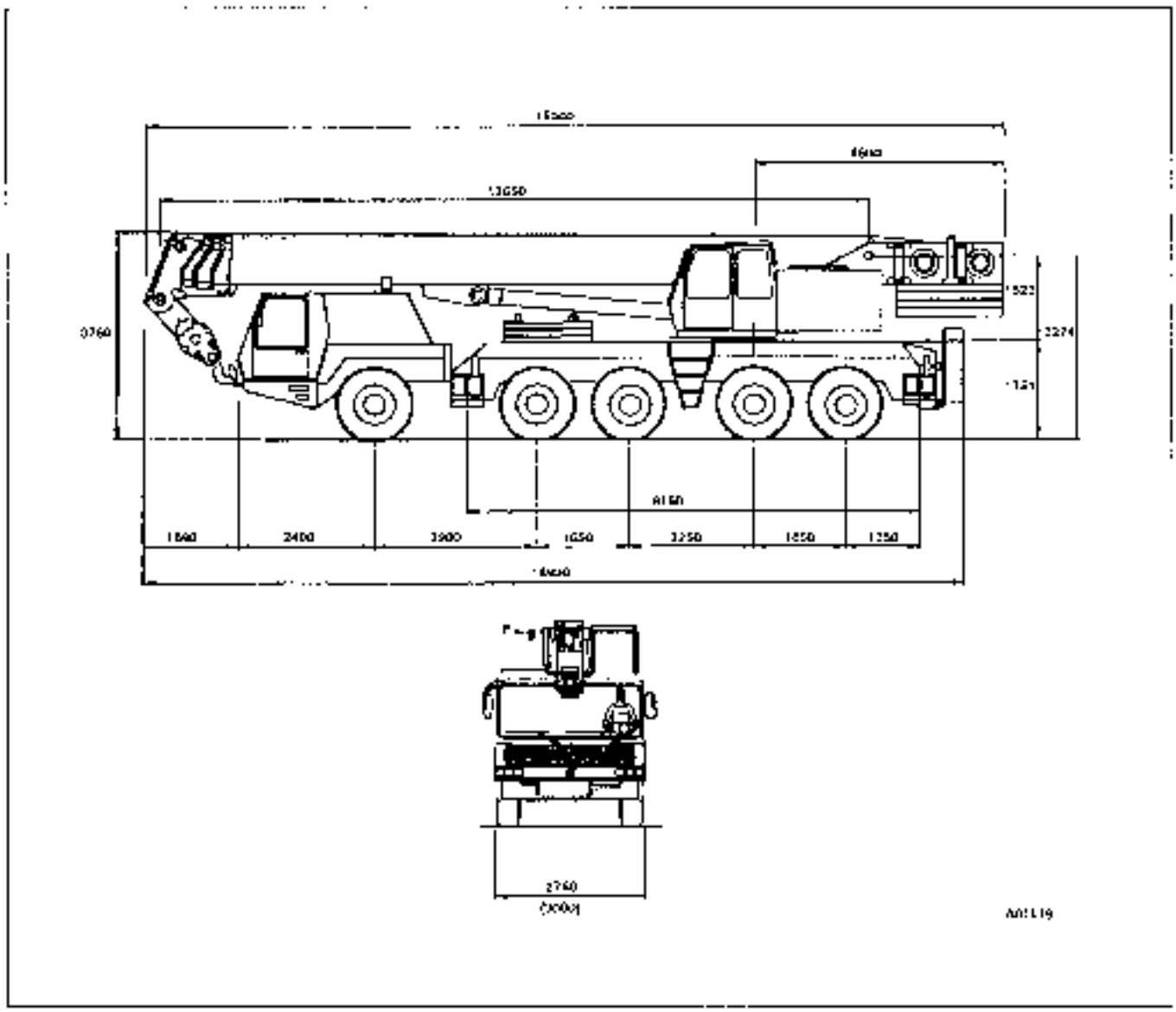

https://www.besttruckmanuals.com/

8.2 Carrier

8.2.1 Chassis

KRUPP five-axle special vehicle with welded torsion-resistant, rigid, large box-type chassis of high-strength fine-grained steel.

Four double-telescoping outrigger sliding beams.

8.2.2 Carrier engine

Make:	Mercedes Benz
Type	OM 442 LA
Rating:	320 kW (435 HP) at 2100 min^{-1} (DIN 6271, IFN) 329 kW (447 HP) at 2100 min^{-1} (80/1269/EEC)
Torque:	1765 Nm (1302 lbf ft) at 1100 to 1600 min^{-1}
Type of combustion:	Diesel, direct injection
Bore:	128 mm (5.04 in)
Stroke:	142 mm (5.59 in)
No. of cylinders:	8 (90° V)
Cubic capacity:	14 618 cm^3 (892 in^3)
Supercharger:	DB exhaust-driven turbocharger, charge air cooler
Cooling system:	Water, fan driven hydraulically by vane fixed displacement motors
Fuel tank:	Volume approx. 400 litres (105.6 gal)

8.2.3 Power shift gear

Allison automatic gearbox CLBT 755 with retarder
Gearbox with 2 gear modes and 5 forward gears and 1 reverse gear in each mode.

https://www.besttruckmanuals.com/

Gear oil cooled by a heat exchanger in the cooling water system for the carrier engine

Gear:	1	2	3	4	5	R
Transmission ratio i.	5.162	3.191	2.021	1.383	1.0	4.724
Maximum speed:	69 km/h (42.9 mph) with 14.00 R 25 tyres (optional equipment)					
	75 km/h (46.6 mph) with 16.00 R 25 tyres					

8.2.4 Transfer case

Kessler transfer case VG 1800, in 2 stages with lockable longitudinal differential.
Gear change and differential lock operated pneumatically.

Torque transfer:	1:1
Transmission ratio.	$i_{on\text{-}road} = 0.97$ $i_{off\text{-}road} = 1.50$

8.2.5 Axle lines

Drive:	10 x 6 x 8 (10 x 8 x 8 - optional equipment)
1st axle line:	Steered axle line
2nd axle line:	Steered and driven axle line transmission ratio i = 7.86
3rd axle line:	Steered and driven axle line (can be switched on additionally) transmission ratio i = 7.86
4th axle line.	Rigid axle line (driven axle line with 10 x 8 x 8 drive, optional equipment, transmission ratio i = 7.86)
5th axle line:	Steered and driven axle line Transmission ratio i = 7.86

Each driven axle line consists of a central drive and two wheel sides with planetary drives

Internal transverse differential locks in all central drives with an actuation device integrated with the casing.

https://www.besttruckmanuals.com/

8.2.6 Steering

Make:	ZF
Type:	Semi-integral with ball nut
Transmission ratio:	i = 25.6
Steering wheel diameter:	450 mm (17.7 in)
Construction:	Dual-circuit semi-integral hydraulic steering system connected mechanically to the 1st, 2nd, 3rd, and 5th axle lines, and hydraulic cylinders on all steered axle lines
Cylinders:	Two on both 1st and 2nd axle lines; dia 60/28 mm (2.36/1.10 in) Two on both 3rd and 5th axle lines; dia 70/32 mm (2.75/1.26 in)
Hydraulic oil supply:	Two gear pumps driven by the carrier engine via a cardan shaft and pump distributor gear (for technical data see Section 8.2.9 "Carrier's hydraulic system")
Max. operating pressure:	150 bar (2175.6 psi)
Emergency steering pump:	Radial piston pump, flanged to the transfer case. Oil flow is switched to this pump automatically if the main pump fails.
Normal steering:	The 4th axle line is not steered The 1st, 2nd, 3rd and 5th axle lines are steered with the steering wheel. The steering direction of the 5th axle line is counter to that of the 1st, 2nd and 3rd axle lines.

https://www.besttruckmanuals.com/

8.2.7 Wheel suspension

Suspension:	Individual wheel suspension with hydropneumatic suspension cylinders, locked hydraulically.
Type of suspension:	Hydropneumatic with nitrogen pressure accumulators Wheel head assembly, drum brake and wheel as suspended parts.
Shock absorbers:	Suspension cylinders in the suspension cylinder assemblies
Carrier level adjustment:	Automatic for "on-the-road" level and manual for other positions
Suspension range:	+170 mm / -130 mm (+6.69 / -5.12 in) at "on-the-road" level

8.2.8 Tyres

Ten single tyres 16.00 R 25 on 11.25-25 disk wheels)
(14.00 R 25 on 10.00-25 disk wheels - optional equipment,
20.5 R 25 - optional equipment)

Spare wheel 16.00 R 25 with holder (14.00 R 25 or 20.5 R 25 as optional equipment)

Air pressure	10.0 bar (145.0 psi) with 14.00 R 25 tyres (optional equipment) 9.0 bar (130.5 psi) with 16.00 R 25 tyres 7.0 bar (101.5 psi) with 20.5 R 25 tyres (optional equipment)
Wheel nuts:	M22x1.5 Torque for wheel nuts 650 Nm (479.4 lbf ft)

https://www.besttruckmanuals.com/

8.2.9 Vehicle's hydraulic system

Make:	Commercial Hydraulics
Construction	Two triple gear pumps, driven by the vehicle's engine via a pump distributor gear.
Triple gear pump	
Model:	P350 B278JB AB 12–7 SPL AB 07–1 SPL AB 05–1
Delivery at nominal speed:	Q_1 = 126 l/min (33.3 gal/min) Q_2 = 76 l/min (20.1 gal/min) Q_3 = 50 l/min (13.2 gal/min)
Allocation:	Pump 1 for steering circuit I. Pump 2 for driving fan I for the engine and gear cooling system. Pump 3 for outriggers and hydropneumatic suspension system.
Triple gear pump	
Model:	P350 B278JB AB 12–7 SPL AB 07–1 SPL AB 05–1
Delivery at nominal speed:	Q_4 = 126 l/min (33.3 gal/min) Q_5 = 76 l/min (20.1 gal/min) Q_6 = 50 l/min (13.2 gal/min)
Allocation:	Pump 4 for steering circuit II. Pump 5 for driving fan II for the engine and gear cooling system Pump 6 for driving the fan for the charge air cooler. If pump 4 fails the oil flow from the emergency steering pump is automatically switched to steering circuit II.
Oil tank:	Volume 270 l (71.3 gal)

https://www.besttruckmanuals.com/

8.2.10 Outriggers

Construction:	Four-point double-telescoping outrigger system
Control:	Can be controlled individually both horizontally and vertically from either side of the carrier.
Outrigger span:	8.15 m x 8.0 m (26.7 ft x 26.2 ft)
Outrigger pads:	round, dia. 500 mm (19.7 in) (rectangular, 400 mm x 700 mm (15.7 in x 27.6 in) - optional equipment)
Outrigger pad surface area:	round pads: 1960 cm^2 (303.8 in^2) (rectangular pad: 2800 cm^2 (434 in^2) - optional equipment)
Crane level monitoring:	With the aid of circular spirit levels on both sides of the carrier and circular spirit levels in the crane operator's cab
Stroke of outrigger cylinders:	550 mm (19.7 in)
Maximum outrigger pressure:	655 kN (147 250 lbf)

8.2.11 Brake system

Pneumatic brake system Brakes designed for maximum load, i.e. 12 t (26 450 lbs) axle load The brake system conforms with EC regulations.

Air intake system

Compressor:	Single-cylinder compressor flanged to the carrier engine.
Air drier:	Air drier with integrated heating cartridge and conditioning tank Heating cartridge switches on at temperatures below 10°C (50°F).
Pressure regulator:	In air drier Cut-out pressure 8.1 bar (117.5 psi). Operating range 0.6 +0.4/–0 bar (8.7 +5.8/–0 psi) Connection for external filling and for filling the tyres.

https://www.besttruckmanuals.com/

Safety valve:	Four-circuit protection valve. Pressure at which circuit protection valve responds 5.5 ± 0.3 bar (79.8 ± 4.4 psi). The reservoirs for compressed-air circuits 1 and 2 are first filled up to a pressure of 5.5 bar (79.8 psi). Then the reservoirs for compressed-air circuit 3 and the secondary consumers are filled.
Air reservoirs:	One 80-litre (21.1 gal) reservoir for circuit 1 (service brake circuit I) Two 40-litre (10.6 gal) reservoirs and one 20-litre (5.3 gal) reservoir for circuit 2 (service brake circuit II) One 60-litre (15.9 gal) reservoir for circuit 3 (parking brake) One 10-litre (2.6 gal) reservoir for circuit 4 (secondary consumers)

Service brake

Construction:	Pneumatic two-circuit brake system acting on all wheels.
Brake cylinders:	1st axle line: two directly controlled diaphragm brake cylinders, type 20" on both wheels. 2nd to fifth axle lines: one directly controlled diaphragm brake cylinder, type 20"/20" on both wheels.
Wheel brakes:	Drum brakes

	1st axle line:	2nd to 5th axle lines:
	Duplex 500 x 180 DE	Simplex 500 x 160 ZE
Brake lining area:	1736 cm^2 (269.1 in^2)	1494 cm^2 (231.6 in^2)
Brake lining type:	Jurid 265	FERODO AM 14

Brake circuits:	Brake circuit I: All brake cylinders on the 1st and 2nd axle lines. Brake circuit II: All brake cylinders on the 3rd, 4th and 5th axle lines. Warning light in the driver's cab (carrier) indicates failure of a brake circuit.

https://www.besttruckmanuals.com/

Parking brake

Construction:	The parking brake acts indirectly on the spring brake cylinders on the second to fifth axle lines. The spring accumulators produce the braking force mechanically. If there is a fault in the compressed-air line the parking brake can be released mechanically. The warning light in the driver's cab indicates that the brake is on or that there is insufficient pressure (below 5.4 bar = 78.3 psi) to release the brake.

Retarder

Construction:	Hydraulic hydrodynamic brake in the automatic gearbox.
Operation:	With a foot operated switch in the driver's cab.

Trailer brake (optional equipment)

Two line brake via trailer brake valve.

Compressed-air secondary consumers

- Change-over of transfer case to on-the-road/off-the-road gear
- Longitudinal differential lock in transfer case
- Longitudinal differential lock in transfer drive axle line, fourth axle line (optional equipment)
- Transverse differential locks in the driven axle lines
- Activation of the third axle line drive
- Suspension locking system
- Activation of additional pressure accumulators for driving off-the-road
- Driving engine cut-out
- Driving engine speed reduction
- Actuation of the retarder
- Fuel reduction in gears 1 and 2 and in reverse

https://www.besttruckmanuals.com/

8.2.12 Vehicle's electrical system

Alternator	28 V / 55 A
Batteries:	Two, each 12 V / 170 Ah
Vehicle's electrical system	24 V

Plug and socket connection between carrier and superstructure for the lighting

8.2.13 Driver's cab

- Two-man aluminium cab with safety glass in the doors and windscreen made of laminated glass. The cab can be tipped with a hand-operated pump
- Hydraulically cushioned driver's seat and passenger seat.
- Engine-dependent water heating system.
- Additional water heating system which is independent of the engine and can also be used to preheat the engine (optional equipment).

8.2.14 Tools

One Tool kit in tool-box, four chocks, first-aid kit, warning triangle, warning lamp.

8.2.15 Driving speeds

Driving speeds in the on-the-road gear at an engine speed of 2100 min^{-1}:

Speed km/h (mph)	Gear 1	2	3	4	5	R
with 14.00 R 25 tyres	13 (8)	22 (13)	34 (21)	50 (31)	69 (43)	15 (9)
with 16.00 R 25 tyres	14 (9)	23 (14)	37 (23)	54 (34)	75 (47)	16 (10)

https://www.besttruckmanuals.com/

8.2.16 Climbing ability

Climbing ability with 14.00 R 25 tyres

52% at transport weight of 60 t (132 300 lbs) in stall ratio torque converter and in off-the-road gear.

8.2.17 Turning circle radii

External turning radius (between walls) (normal steering): 12.4 m (40.68 ft)

External turning radius (between walls) measured at boom head: 13.0 m (42.65 ft)

Internal turning radius (between kerbs) (normal steering): 5.7 m (18.70 ft)

8.2.18 Weights

For driving on roads with the boom placed on the truck crane

Depending on the equipment installed on the truck crane certain parts of the counterweight are permitted to be transported on the crane when it is driven on roads.

The following table shows

- which parts of the counterweight may be transported on the crane
- where the counterweight sections have to be placed for driving on roads

https://www.besttruckmanuals.com/

Equipment	Truck crane with 16.00 (14.00) tyres, outrigger pads, full tanks																
	Two-stage swing-away lattice extension	without						with									
	Auxiliary hoist	without				with				without				with			
	Spare wheel	without		with		without		with		without		with		without		with	
	Hook block (t) (1000 lbs)	18 (39.7)	45 (99.2)	18 (39.7)	45 (99.2)	18 (39.7)	45 (99.2)	18 (39.7)	45 (99.2)	18 (39.7)	45 (99.2)	18 (39.7)	45 (99.2)	18 (39.7)	45 (99.2)	18 (39.7)	45 (99.2)
		A*	A	E*	A	A	A	A	A	A	A	A	A	E	A	E	A
Counterweight (t)	On superstructure	3.2	3.2	3.2	2.6	(2.6)	–	–	–	3.6	3.6	3.2	3.2	2.6	2.6	2.6	(2.6)
	On carrier	4.2	4.2	4.2	4.2	4.2	4.2	4.2	4.2	4.2	4.2	4.2	4.2	4.2	–	(4.2)	–
		0.6	0.6	0.6	0.6	(0.6)	(0.6)	–	–	–	–	–	–	–	–	–	–
		0.3	0.3	(0.3)	0.3	(0.3)	–	–	–	–	–	–	–	–	–	–	–
		0.3	0.3	(0.3)	0.3	(0.3)	–	–	–	–	–		–	–	–	–	–
Counterweight (x 1000 lbs)	On superstructure	7.0	7.0	7.0	5.7	(5.7)	–	–	–	7.9	7.9	7.0	7.0	5.7	5.7	5.7	(5.7)
	On carrier	9.3	9.3	9.3	9.3	9.3	9.3	9.3	9.3	9.3	9.3	9.3	9.3	9.3	–	(9.3)	–
		1.3	1.3	1.3	1.3	(1.3)	(1.3)	–	–	–	–	–	–	–	–	–	–
		0,7	0,7	(0,7)	0,7	(0,7)	–	–	–	–	–	–	–	–	–	–	–
		0,7	0,7	(0,7)	0,7	(0,7)	–	–	–	–	–	–	–	–	–	–	–

* E = suspended: Hook block fixed in front coupling with short endless rope

A = holder: Hook block in holder on carrier

Data in ( ): These counterweight sections can be transported on the crane additionally if 14.00 R 25 tyres are fitted.

https://www.besttruckmanuals.com/

For driving on roads with the boom placed on a trailer

Depending on the permitted axle loads and permitted total weight certain parts of the counterweight are permitted to be transported on the crane, either placed on the carrier or installed on the superstructure, when it is driven on roads (please see Section 2.1 "Road safety")

https://www.besttruckmanuals.com/

8.3 Superstructure

Joined to the carrier via a ball bearing slewing rim and prestressed, high-strength bolts.

Slewing range:	360°, unrestricted
Width:	2.75 m (9.02 ft)

8.3.1 Turntable

Torsion-resistant welded design made of high-strength fine-grained steel.

8.3.2 Crane engine

Make:	Mercedes Benz
Model	OM 366
Rating:	125 kW (170 HP) at 2100 min^{-1} (DIN 6271, IFN)
Torque:	560 Nm (413 lbf ft) at 1500 to 1600 min^{-1}
Type of combustion:	Diesel, direct injection
Bore:	97.5 mm (3.84 in)
Stroke:	133 mm (5.24 in)
No. of cylinders:	6 (R)
Cubic capacity:	5958 cm^3 (363 in^3)
Cooling system:	Water
Fuel tank.	Volume approx. 200 litres (52.8 gal)

https://www.besttruckmanuals.com/

8.3.3 Crane's hydraulic system

Type:	One axial-piston variable displacement double pump and one triple gear pump Driven permanently via a pump distributor gear on the crane engine. When crane is in operation: n_{Motor} = 1 800 min^{-1}
Control:	Stepless adjustment of all crane movements with hydraulic pilot control and control lever with automatic return to the "off" position.

Axial piston double pump, pumps 1 and 2

Model:	A8V 0 107 LR 3 CH2 / 60 R1 - PZGO 5 K 02
Delivery:	Q_1 = 0 to 160 l/min (0 to 42.3 gal/min) Q_2 = 0 to 160 l/min (0 to 42.3 gal/min)
Allocation:	Pump 1 for main hoist, pump 2 for derricking gear, telescoping gear and counterweight lifting gear (restricted delivery).

Triple gear pump, pumps 3, pump 4 and pump 5

Model:	1 PF2 G3 – 30/0 38 RD 07 MBK + 1 PF2 G3 – 30/0 38 LN 07 MHV + 1 PF2 G2-4 x/011 RN 20 MHL
Delivery:	Q_3 = 65 l/min (17.2 gal/min) Q_4 = 65 l/min (17.2 gal/min) Q_5 = 19 l/min (5.0 gal/min)
Allocation:	Pump 3 and pump 4 for slewing gear, pump 5 as pilot pressure pump
Oil tank:	Volume 1200 l (317 gal)

https://www.besttruckmanuals.com/

8.3.4 Main hoist

Make:	Siebenhaar
Model:	CUHE 44 CL2
Drum diameter	494 mm (475 + 19 mm) (19.4 in = 18.7 + 0.7 in)
Rope diameter	19 mm (0.7 in)
Rope length:	240 m (787 ft)
Max. rope pull:	61.0 kN/line (13 450 lbs)
Max. rope speed:	120 m/min (394 ft/min)
Drive:	Hydraulic axial-piston variable displacement motor
Gear unit:	Planetary gear i = 61.7
Brake:	Hydraulically released multiple disk brake with overrunning

8.3.5 Auxiliary hoist (optional equipment)

Make.	Siebenhaar
Model:	CUHE 44 CL2
Drum diameter:	494 mm (475 + 19 mm) (19.4 in = 18.7 + 0.7 in)
Rope diameter:	19 mm (0.7 in)
Rope length:	180 m (590 ft)
Max. rope pull:	61.0 kN/line (13 450 lbs)
Max. rope speed:	120 m/min (394 ft/min)
Drive.	Hydraulic axial-piston variable displacement motor
Gear unit:	Planetary gear i = 61.7
Brake:	Hydraulically released multiple disk brake with overrunning

https://www.besttruckmanuals.com/

8.3.6 Slewing gear

Make:	Siebenhaar
Model:	CUDE 03 L2
Drive:	One hydraulic vane motor
Gear unit:	One planetary gear i = 68.25
Brake:	Hydraulic disk brake as service and permanent brake
Slewing rim:	Two-row ball bearing slewing rim with external toothing 142 teeth, module 12 Tightening torque of the bolts M33: 2700 Nm (1991 lbf ft)
Drive pinion:	One drive pinion, tooth clearance can be set with an eccentric 12 teeth, module 12

8.3.7 Derricking gear

Cylinder:	One differential cylinder with safety non-return valves
Adjusting angle:	-1.5° to +84° from the horizontal

8.3.8 Main boom

Construction:	KRUPP profile section in high-strength fine-grained steel, consisting of a non-telescoping basic boom element and 3 telescope sections which can be telescoped hydraulically under partial load
Boom length:	12.65 + 9.45 + 9.45 + 9.45 = 41.0 m (41.5 + 31.0 + 31.0 + 31.0 = 134.5 ft)
Head sheaves:	Six or eight sheaves, dia. 523 mm (20.8 in)
Cylinders:	One stage telescopic cylinder for telescope section I with oil supply to the next two-stage telescope cylinders for telescope sections II, and III

https://www.besttruckmanuals.com/

8.3.9 Boom extension (optional equipment)

Construction:	Two-stage swing-away extension of tubular lattice design
Length:	10 m / 16 m (32.8 ft / 52.5 ft)
Angle:	0° or +6° to the main boom

8.3.10 Counterweight lifting gear

Lifting gear:	Two differential cylinders with a flow-divider valve and two throttle non-return valves with a fixed orifice for synchronisation of cylinders
Protected pressure:	40 bar (580 psi) during lowering
Actuation:	Electro-hydraulic

8.3.11 Counterweight versions

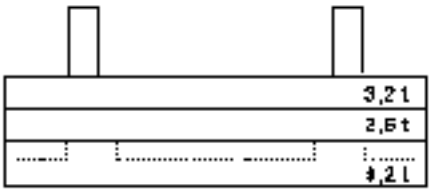

10.0 t (22 050 lbs)

A00910

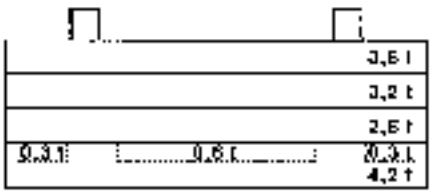

14.8 t (32 600 lbs)

A00907

https://www.besttruckmanuals.com/

B.3.12 Hook blocks

80-t hook block: 7 sheaves dia. 528 mm (20.8 in), double hook, weight 1100 kg (2420 lbs)

60-t hook block: 5 sheaves dia. 528 mm (20.8 in), double hook, weight 700 kg (1540 lbs)

45-t hook block: 3 sheaves dia. 528 mm (20.8 in), single or double hook, weight 650 kg (1430 lbs)

18-t hook block: 1 sheave dia. 528 mm (20.8 in), single hook, weight 300 kg (660 lbs)

8-t hook tackle: single hook, weight 200 kg (440 lbs)

B.3.13 Safety devices

- Overload shutdown system (electronic load moment limiting system = SLI)
- Restriction of the highest and lowest boom positions via the SLI and mechanical stops
- Dead man's switch in the control levers and seat switch
- Lifting limit switch
- Lowering limit switch
- Maximum load limitation (pressure relief valves)
- Pipe break valves
- Anemometer for main boom and boom extension

https://www.besttruckmanuals.com/

8.3.14 Operating speeds without a load

The operating speeds below are with an engine speed of 1800 min^{-1}.

Main hoist:	Rope speed when lifting and lowering
	at normal speed 43 m/min (141 ft/min) at fast speed 120 m/min (394 ft/min)
Auxiliary hoist:	Rope speed when lifting and lowering
	at normal speed 43 m/min (141 ft/min) at fast speed 120 m/min (394 ft/min)
Slewing gear:	0 to 2.2 revolutions per minute
Telescope gear:	Telescoping out the boom, telescope sections I to III
	at normal speed 290 s at fast speed 150 s
Derricking gear:	Raising boom
	from lowest to highest position 47 s
Outriggers:	Extending the sliding beams:
	at average engine speed 42 s
	Extending the outrigger cylinders:
	at average engine speed 38 s

8.3.15 Crane operator's cab

- Aluminium cab with panoramic view and safety glass all round, roof window made of bullet-proof glass
- Hydraulically cushioned adjustable seat with arm rests and head rest
- Engine-dependent water heating system
- Engine-independent additional water heating system which can also be used to preheat the engine (optional equipment)

https://www.besttruckmanuals.com/

8.4 Tightening torques for fixing bolts

If no special tightening torques are stipulated in this section, the following guidelines apply:

Standard metric thread Fine-pitch metric thread			Guidelines		
Thread size (mm)	Spanner width (mm)		Tightening torque for max. permitted initial bolt tension (Nm) (lbf ft)		
	Hexagon bolt	Cheese head bolt	Bolt quality		
			8.8	10.9	12.9
M8 M8x1	13	6	22.5 (16.6) 24.3 (17.9)	31.5 (23.2) 34.2 (25.2)	36.0 (26.5) 40.5 (29.9)
M10 M10x1.25	17	8	44.0 (32.5) 46.8 (34.5)	62.0 (45.7) 65.7 (48.5)	75.0 (55.3) 79.2 (58.4)
M12 M12x1.5	19	10	77.5 (57.2) 81.0 (59.8)	110.0 (81.2) 112.5 (83.0)	130.0 (95.9) 135.0 (99.6)
M14 M14x1.5	22	12	120.0 (88.5) 135.0 (99.6)	170.0 (125.4) 189.0 (139.4)	210.0 (154.9) 225.0 (166.0)
M16 M16x1.5	24	14	190.0 (140.2) 202.5 (149.3)	165.0 (121.7) 283.5 (209.1)	320.0 (236.0) 342.0 (252.3)
M18 M18x1.5	27	14	260.0 (191.8) 292.5 (215.8)	365.0 (269.2) 414.0 (305.3)	435.0 (320.9) 495.0 (365.1)
M20 M20x1.5	30	17	370.0 (272.9) 414.0 (305.3)	520.0 (383.5) 576.0 (424.8)	620.0 (457.2) 693.0 (471.3)
M22 M22x1.5	32	17	500.0 549.0	700.0 774.0	840.0 945.0
M24 M24x1.5	36	19	640.0 (472.0) 702.0 (517.7)	900.0 (663.8) 990.0 (730.1)	1080.0 (796.5) 1170.0 (862.9)
M30	46	22	1300.0 (958.8)	1800.0 (1327.5)	2160.0 (1593.0)
M36	55	27	–	3300.0 (2433.8)	-

https://www.besttruckmanuals.com/

https://www.besttruckmanuals.com/

Order Data

https://www.besttruckmanuals.com/

https://www.besttruckmanuals.com/