Powertech

Repair manual

Mechainical

Electric/electronic

SIH

This document provides data, characteristics, instructions and methods by which to perform service work on the vehicle and its components. This document is written for staff of SIH authorized service providers to help them perform service work as instructed in this book.

Check if the workshop literature concerning the repairing vehicles are available and make sure all protective devices are available and effective. Further confirm correct parking of the vehicle that the service can be carried out safely.

Strictly follow the instructions of this manual and use the special tools as required to ensure correct service activities, proper man-hours and safety of the operators.

When the service activities are finished, the functionality, availability and safety provided by SIH should be restored.

All the modifying and replacing activities must be authorized by SIH, otherwise, SIH will take no responsibility. Esp. in the vehicle warranty period, any un-authorized modification will result in an invalidated warranty.

SIH is not responsible for the service activities performed.

SIH will provide all necessary clarifications for the proper performance of the service, and cases and conditions that are not stated in this manual.

The right to modify data and information contained in this manual at any time without notice is reserved.

This manual covers a full range of Genlyon vehicles and the configuration contained herein may vary from the actual, a difference which is caused by the optional devices. Please contact SIH service networks before carrying out all service.

The data contained in this manual might fail to reflect the latest changes which the Manufacturer may introduce at any time, for technical or sales purposes or to meet the requirements of local legislation.

Note: SAIC Iveco Hongyan Commercial Vehicle Co., Ltd is referred to as SIH in this manual.

N.B. to Introduction

This manual is structured into several chapters and sections marked by numbers and their table is listed in the index.
A section covers a specific portion of the vehicle (Engine, driving cab, electrical system, etc.).
A section of a mechanical portion contains technical data, tightening torque, tool list and devices connected to the vehicle — disconnect such from the vehicle and service on the wok bench .
In the section on electrical systems are the electric network and vehicle electronic systems, circuit diagram, electrical character of components, component codes and troubleshooting related to the electrical system.
Symbols are used in this manual for proper and correct description; the purpose of these symbols is to classify information contained. In particular, groups of warning symbols and auxiliary operation symbols are defined separately.

SYMBOLS – WARNINGS

Danger to personal safety

Ignore or failure to follow correctly may result in personal injury.

Danger of serious damage to the vehicle

Failure to follow a procedure correctly may cause serious damage to the vehicle and, in some conditions, may result in an invalidated warranty.

Common danger

It includes danger indicated by symbols mentioned above.

Environment protection

It reflects the correct vehicle operation methods which are environmentally friendly.

Note: Information must be provided for additional explanation.

SYMBOLS – Auxiliary Operation

	Removal Detaching
	Reinstallation Connection
	Removal Disassembling
	Install in place Assembling
	TIGHTENING TORQUE
	Tighten to torque + angle value
	Press-in
	Adjusting Rectifying
	Visual inspection Mounting place inspection
	Measurement Value to measure CHECKING
	Equipment
	Machining surface Mechanical process
	Withstand Closely fitted
	Thickness Clearance
	LUBRICATION To lubricate Grease
	Sealant Adhesive
	Deflation
	Replacement Original spare parts

	Air intake
	Exhaust
	Operation
	Compression ratio
	TOLERANCES Weight difference
	Rolling torque
	Rotation
	Angle Angular value
	Preload
	Rotation speed
	Temperature
	Pressure
	Greater than superior Maximum, peak
	Smaller than Less than Minimum
	Selection Grade Oversizing
	Temperature < 0℃ Cold Winter
	Temperature > 0℃ Hot Summer

Common danger

Waning symbols can't indicate all dangers that may possibly occur. It is suggested to contact superiors immediately whenever a danger not described occurs.

Use both specific and general-purpose tools as required in the operation and maintenance manual. Check the service condition and usability of the tools for which a periodic inspection is not required.

The manual handling of loads must be assessed in advance because it's determined not only weight, but also size and the route.

A crane must be employed when handling a mechanical operation and it must be properly applied according to the weight, shape and volume of the component. The maximum loading capacity must be clearly marked on the hoisters, ropes and hooks used. Only authorized personnel be allowed to perform the above-mentioned methods. Periodically clean the load supporting part. However, standing under the load supporting part is not allowed.

When disassembling, always follow the provision provided, pay attention to prevent personal injury caused by accidentally falling of the mechanical parts.

Dual-person operations must be performed in a manner that guarantees maximum safety. Always avoid dangerous operations that may cause personal injury because of not being seen or improper positions.

Keep unauthorized personnel away from the working area.

Learn necessary knowledge of vehicle operation and safety prior to carrying out any on-vehicle service. All the safety warnings must be exactly followed. Proper markings be employed on vehicles in service. Once the repair service is finished, all inspections listed in the User Control Precautions section of the operation and maintenance manual must be completed.

When the sight is blocked in an on-vehicle operation, assistance from a technician on ground is needed. Continuous running of an unattended vehicle under service is not allowed.

Proper scotch, wedge blocks and wheel blocks should be used to immobilize the vehicle during repair, inspection and maintenance service.

In case the vehicle is lifted for a service, please check if the vehicle can achieve adequate stability on the special support. If a hoister is used for the lift, check that the manual/automatic security switch is activated.

When an operation must be performed on a methane-fed vehicle, please seriously follow instructions listed in the document and all the special safety regulations.

The radiator cap can only be screwed down when the engine is cold to allow for the release of the residual pressure of the system.

Inflammable fuel and all inflammable fluids and liquids must be handled with care, according to the 12-precaution card of hazardous substances. Refueling can only be performed outdoors with the engine switched off, lights, flames or sparks are forbidden to prevent sudden fires/bursts. Please properly store inflammable, corrosive and polluting fluids and liquids according to the formally enforced regulations. Storage of harmful liquids in a food container is absolutely forbidden. Drilling or boring into the storage containers is not allowed and always dispose of cloths contaminated with inflammable substances into a suitable container.

SIH original spare parts should be used to replace the worn-out, damaged or consumable parts.

Keep the workshop clean during the repair service; clear and clean the fluid and oil spots splashed on the floor. Electric sockets and electric equipments employed in the repair service must meet the safety regulations.

For every service on vehicle hydraulics, pneumatics, conditioning and AIR BAG systems, the specified instructions in the relevant sections of the manual must be strictly followed.

Common danger

Wear appropriate protective clothes and devices as stipulated in the accident prevention instructions before carrying out services; contact with moving parts may cause serious personal injury. Wear well-fitted protective clothes and avoid wearing jewelry, scarves, etc.

Do not run the engine in areas without exhaust out-lets.

Do not inhale fumes produced by heating or paint welding because health hazards may arise from the inhalation; operate outdoors or in well-ventilated areas. Wear a suitable breathing mask if paint powder is present.

Avoid contact with hot water or steam from the engine, radiator and pipes because serious burns may be caused. Please avoid direct contact with fluids or liquids from vehicle system.

Clean devices or assemblies detached from the vehicle and carefully check their wholeness before overhaul. Put the detached or disassembled parts and theirs fasteners (bolts and nuts) neatly into special containers.

Check for the wholeness of the screw-tight parts: Washer, positioning pin and clamp damage, etc. Self-locking nuts with nylon inserts must be replaced.

Avoid contact of the rubber parts with diesel oil, petrol or other incompatible substances.

Protect electric connections and central units（if equipped） before cleaning parts with wash gun.

Fasten screws and nuts as required, the SIH service network will provide all necessary instructions which are not stipulated in this document.

Before welding:

- ⑥ Disconnect all electronic central units, detach the power cable from the positive terminal of the battery (connect it to the chassis grounding) and disconnect connectors.
- ⑥ Remove paint by using proper solvents or paint removers and clean corresponding surface with soap and water.
- ⑥ Wait 15 minutes before welding.
- ⑥ Please equip with adequate fire protection device to protect hoses or other components of inflammable fluids or liquids where fire accidents may occur during welding.

The electronic central units should be disconnected when the vehicle is in a temperature higher than 80℃ (paint drying oven).

Always follow all formally enforced regulations when carrying out all fluid and liquid disposal operations.

Common dangers of electrical systems

If an operation must be done on the electric/electronic system, please disconnect the battery; in this case, you must disconnect the cable from the neg. terminal of the battery from the chassis grounding point first.

Before connecting the battery to the system, make sure that the system is properly insulated.

Please disconnect the external recharging device from the public power supply before detaching the fixing pin from the battery.

No sparks are allowed during inspection when the battery is recharging.

Do not use a test lamp to check the continuity of the circuit; only appropriate control devices can be employed.

Make sure that the wiring harnesses of electronic devices reaches the requirements of SIH (length, lead type, position, fixed form, connection to shielding weaves, grounding, etc.), and carefully restore to the same after repair or maintenance service.

When measuring the electrical connection of the electrical central unit driving device, plug and components, only test leads with special plugs and sockets can be used. To prevent short-circuit danger and plug damage, usage of improper tools like leads, screw drivers and clamps which may cause contact fault are not allowed.

Do not use fast chargers to start the engine. This kind of start can only be applied on special vehicles or vehicles with separate batteries.

Reversed voltage polarity connection of the power supply of the electrical central unit driving device (e.g.: reversed polarity of battery) may cause damage to the driving device.

Disconnect the battery from the system when recharging with an external recharger.

When connecting, the nuts of connection (temperature sensor, pressure sensor, etc.) can only be loosened to a specified torque.

Isolate the electrical central unit from the system before disconnecting the connector from it.

Do not supply directly to the servo components of the electronic central units with the rated vehicle voltage.

The cables should be arranged in a manner that it is parallel to the reference surface, e.g. to be as close as possible to the frame / body structure.

Once the electrical system service work is completed, restore the connector and wire harness connections to the original layout.

Key memory procedures may be influenced by electromagnetic interference (mobile phones, etc.).Therefore, when carrying out key memory::

1. Pay attention that no human-induced interference source is present in the cab or near the key.

2. The un-input key should be kept at least one meter away.

Note: Connectors should be visible from the cable side. View of connectors in this manual is the typical view from the cable side.

Grounding and shielding

The shorter the negative lead connected to the system grounding point is, the better; the leads are fixed to each other at the lock point by star connection mode, firm sequence and locked tight by proper methods. (Figure 1, refer to point M).

Then, the following notes should be followed in operation of electrical components:

- The electrical central unit has to be connected to the system grounding point if it has a metal case.
- The negative cable of the electrical central units must be connected to a system grounding point (e.g.: open type grounding point of instrument panel (not by series or chain type connection) and the negative pole of the battery.
- Even if is not connected to a system grounding point / negative terminal of the battery, such grounding components (sensor) should be of good insulation. Esp. the parasitic resistance of the terminal lug: Oxidizing and the concave fault of the contact point.
- A circuit connection must be employed between the circuit shielding weaves and the central units with input signals (Figure 2).
- If there is a connection joint, the un-shielding part D should be as short as possible (Figure 2).
- The cables should be arranged parallel to the reference surface, e.g. to be as close as possible to frame / body structure.

Figure1

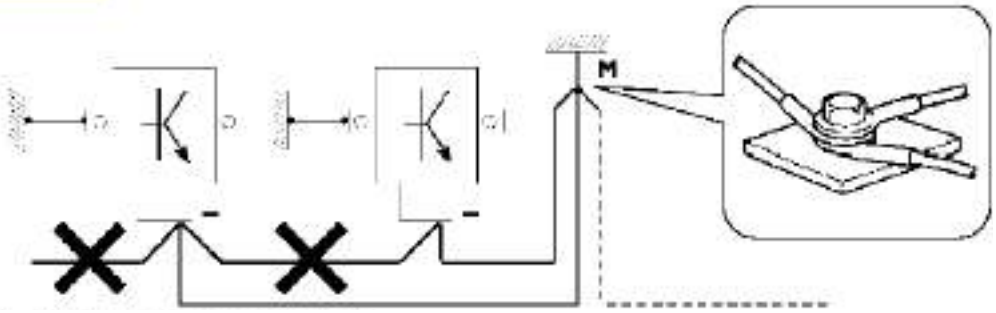

1. Negative cable is star-connected to the system grounding point **M.**

Figure2

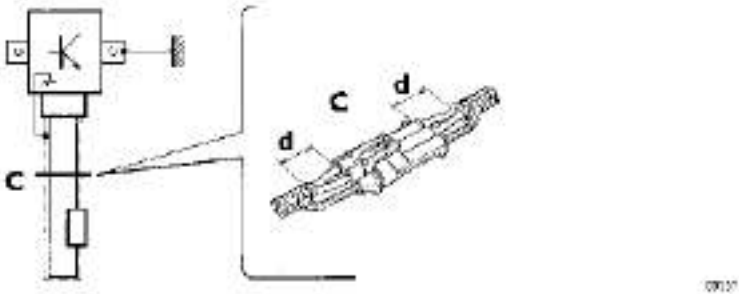

2. The cable leads connected to the electrical components are shield-protected by metal weaves – C. connect point d. distance →0

Installation of optional electrical and mechanical components

SIH installation instruction must be followed when carrying out vehicle accessories installation, addition and modification service (Special document Instructions for modification and preparation is available at the workshop assistance network).Please note that, especially regarding the operation of electrical systems, several electrical sockets are provided as series (or optional) sockets in order to simplify the electrical service and standardize the personal protection of the operator.
For any exceptional installation instructions, an SIH authorization must be obtained.
Failure to follow the provision above may cause the termination of the warranty.

It is strictly forbidden to modify or connect to the electrical central units wiring; in particular, no change can be made to the data buses between central units.

Conversion between the major international measurement unit and idiomatic usage unit

Power

1 kW	=	1.36 metric HP
1 kW	=	1.34 HP
1 metric HP	=	0.736 kW
1 metric HP	=	0.986 HP
1 HP	=	0.746 kW
1 Hp	=	1.014 metric HP

Torque

1 Nm	=	0.1019 kgm
1 kgm	=	9.81 Nm

Revolutions per time unit

1 rad/s	=	1 rpm x 0.1046
1 rpm	=	1 rad/s x 9.5602

Pressure

1 bar	=	1.02 kg/cm^2
1 kg/cm^2	=	0.981 bar
1 bar	=	10^5 Pa

(For purpose of simplicity, unit Nm and bar units are converted according to 10:1 and 1:1)

1 kgm	=	10 Nm
1 kg/cm^2	=	1 bar

Temperature

0° C	=	32° F
1° C	=	(1 x 1.8 + 32) ° F

Section Index

General information

Vehicle Identification Number (VIN)

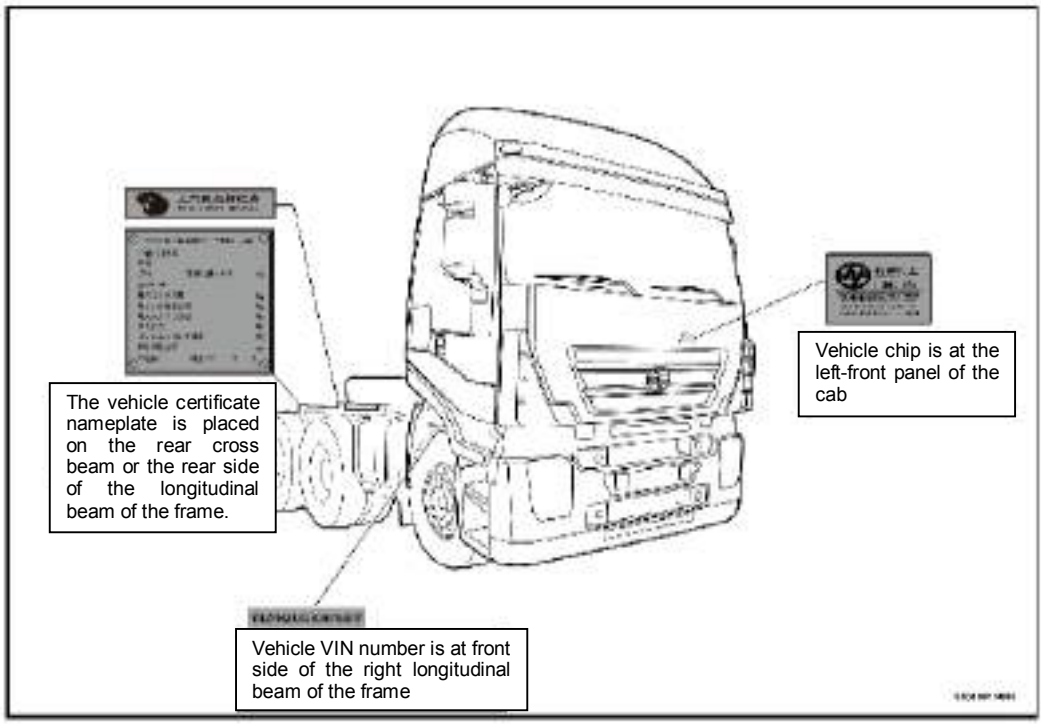

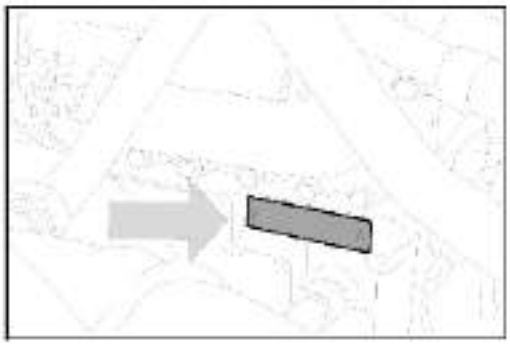

Engine stamp number
Left-rear side of engine cylinder block

Vehicle type description

4X2 tractor

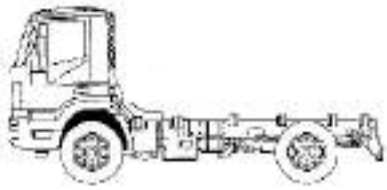

4X2 highway transporter and self-dumper

6X4 tractor

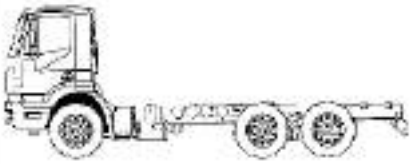

4X2 highway transporter and self-dumper

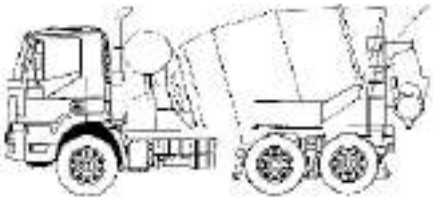

6X4 special vehicle

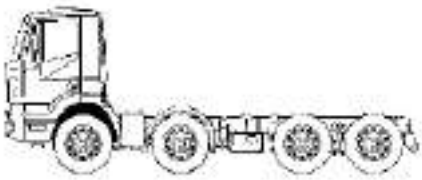

8X4 highway transporter

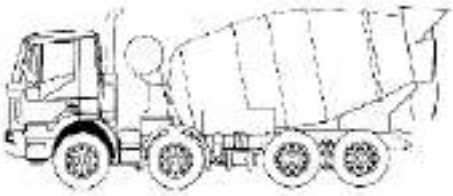

8X4 special vehicle

Configuration Sheet of Genlyon

Assembly	configuration		
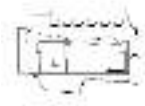	Cursor9-340 Cursor9-380 Cursor9-400	WP10.375	SC9DF340Q3
	F&S420 diaphragm clutch Φ430diaphragm clutch		
	9JS119 9JS135 12JS160TA 12JS180TA		
	CF7140		
	F24DH06, Press welding 16T, i=4.8	F2400100, Press welding 13T, i=4.111	H6A Press welding, 13T, i=4.111
	ZF8098		
	Front suspended positive positioned elliptic spring Rear suspended positive positioned elliptic spring Rear overhang elliptic spring with balancing suspension		

Lubrication specification

Component		Lubricant No.		Quantity of lubricant	
		SAE	API		L
Engine	WP10		CF-4		25
	SC9DF		CH4		25
	Cursor 9	15W40	CI-4		25
Transmission;	9JS135		GL-5		13
	12JS160T				17
	12JS180T	85W/90	GL-5		18.5
Steering System		8# or N32	GL-5		5
Rear axle	STEYP	85W/90	GL-5	Middle 6 wheel side 2	10
	485	85W/90	GL-5		18
Intermediate axle	STEYP	85W/90	GL-5	Middle 8.3 wheel side 2	12.3
	485	85W/90	GL-5		18
Front axle	STEYP	Vehicle universal lithium grease No.2	GL-5		2kg
Cooling system		Glycol type antifreeze No. 35			45
Clutch		4064(JG3)			1.2
Cab lifting system		HV-32(N32)			2
Grease		Vehicle universal lithium grease No.2			As needed
		Molybdenum disulfide lithium grease No. 3			As needed

F2C CURSOR Engine

General specifications

Technical and commercial code comparison

Technical Code	Commercial Code
F2CE0681A*B001 F2CE0681A*B051 F2CE0681B*B002 F2CE0681B*B052 F2CE0681C*B002 F2CE0681C*B052 F2CE0681D*B003 F2CE0681D*B053	C87 ENT C

Technical encoding rules

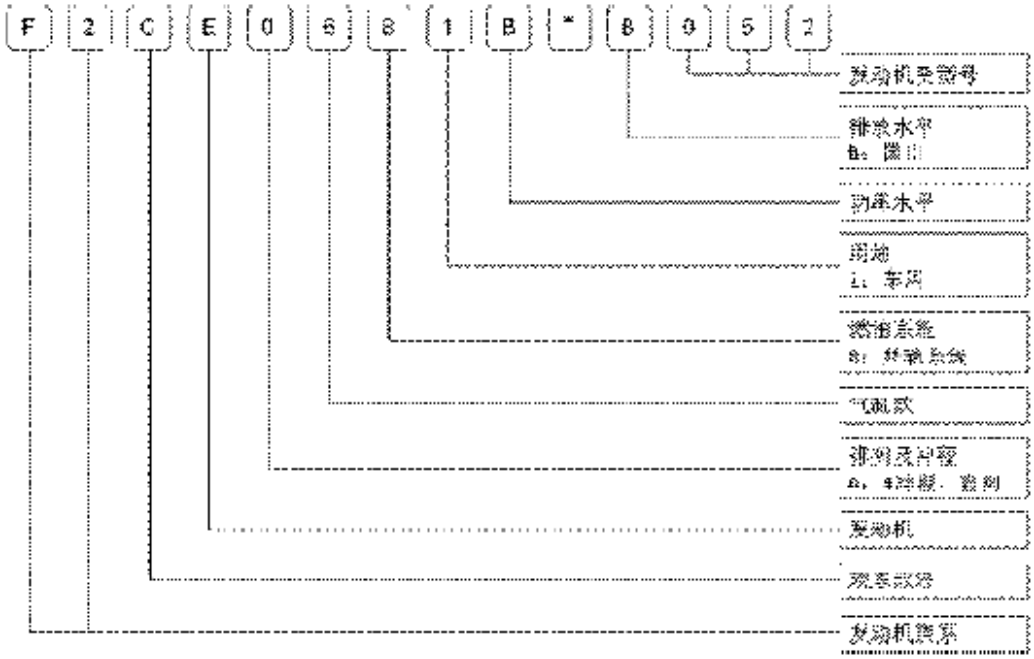

View of engine

Figure 1

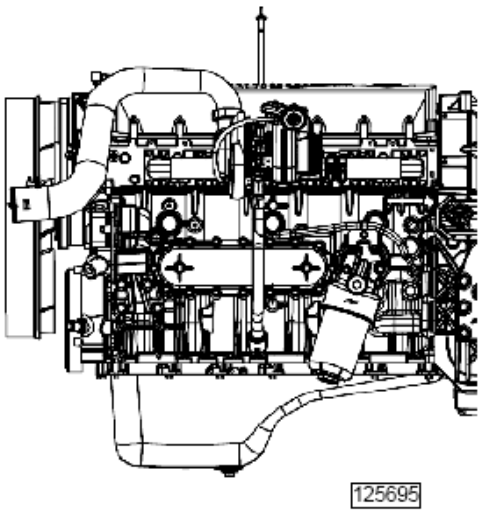

Left hand view

Figure 3

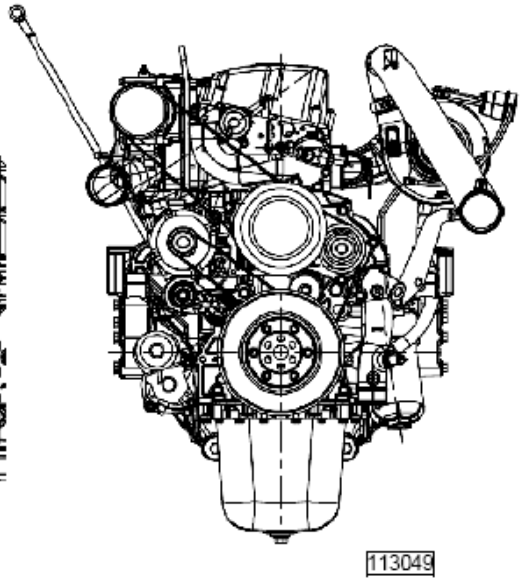

Front View (fan exclusive)

Figure 2

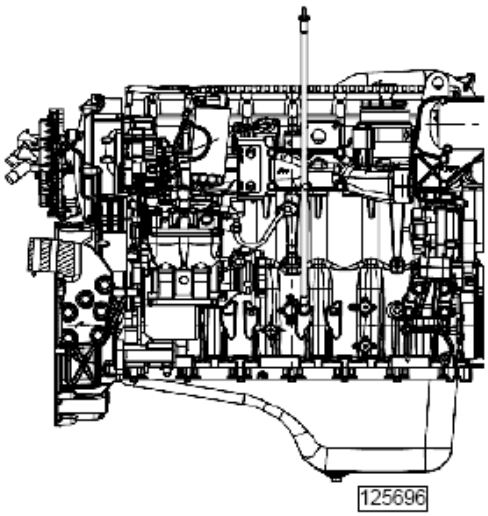

Right hand view

Figure 4

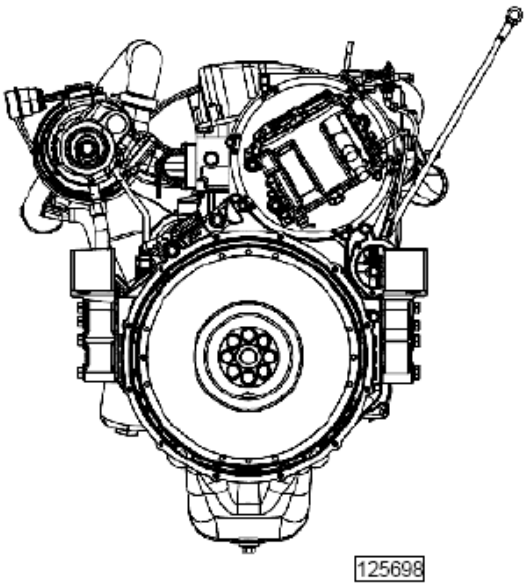

Rear view

Figure 5

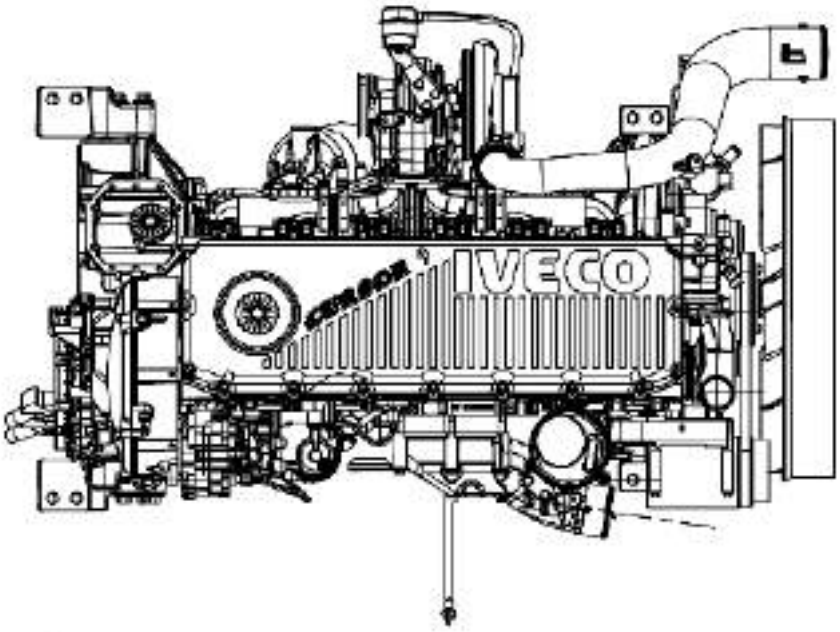

Top view

Engine overall dimensional drawing

Figure 6

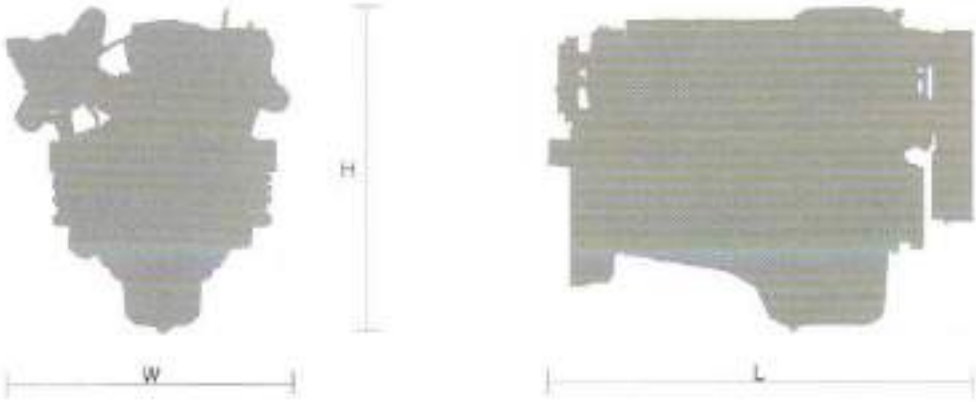

Length (L)＝1340 mm Width (W)＝890 mm

Height (H)＝1070 mm

Figure 7

Lubrication system diagram

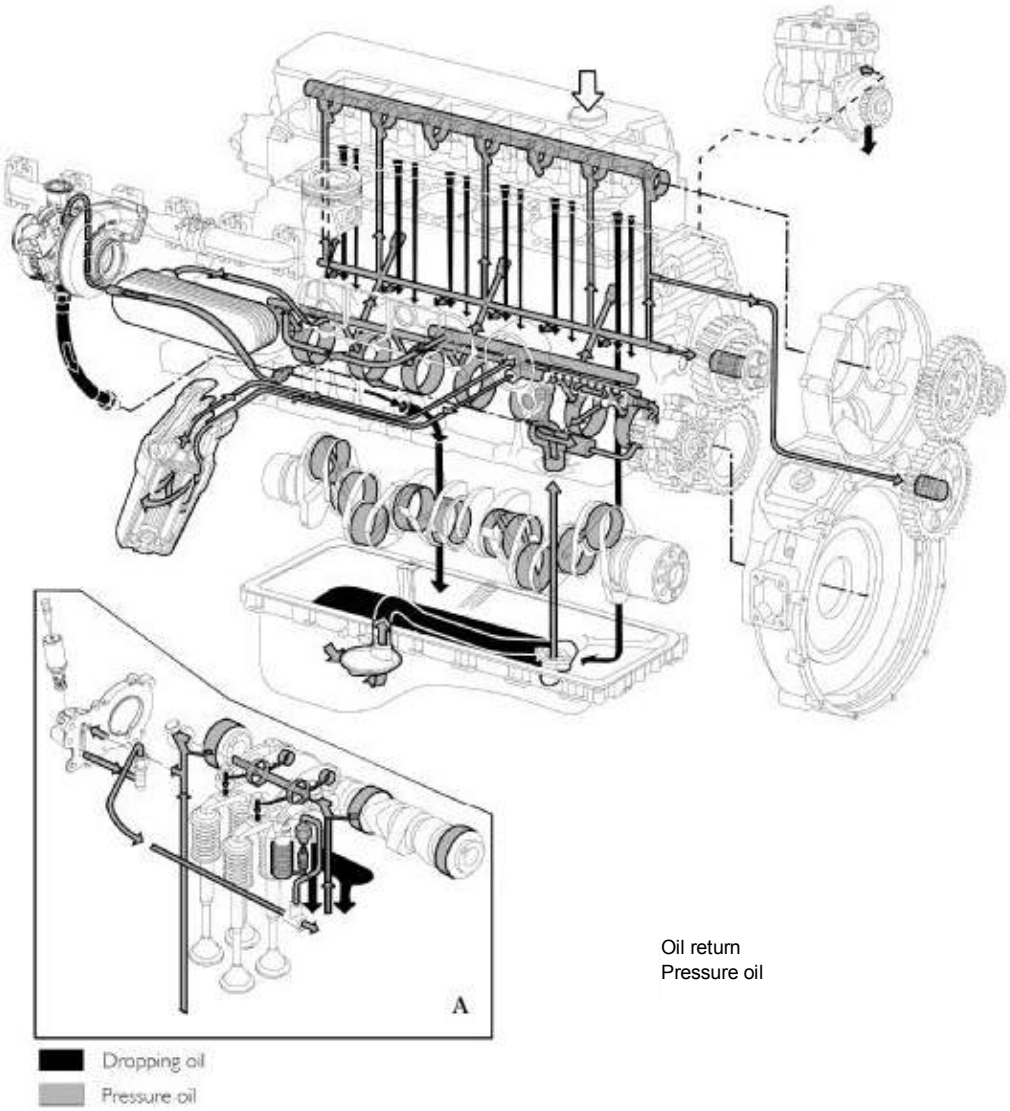

Oil return
Pressure oil

Oil pump

Figure 8

Safety valve

Overhauling the oil pump (1) is prohibited, once the oil pump is damaged, replace the oil pump ASSY. Refer to the instructions in the relevant sections for the replacement of the crankshaft gear (2).

Figure 9

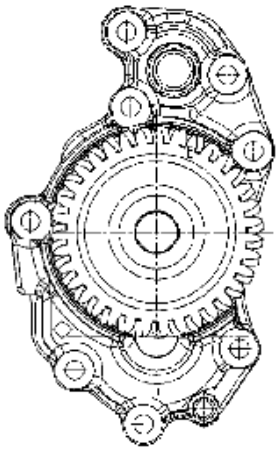

Figure 10

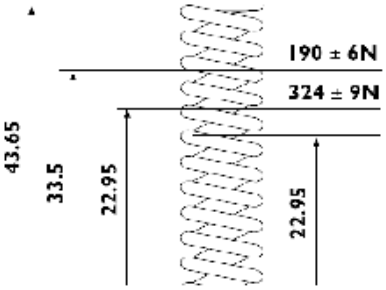

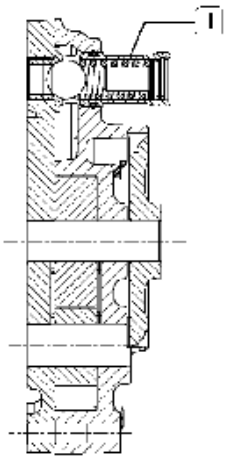

Sectional view of the oil pump

1. Safety valve – initial start pressure 10.1 ±0.7 bars

Oil Pressure control valve

Figure 11

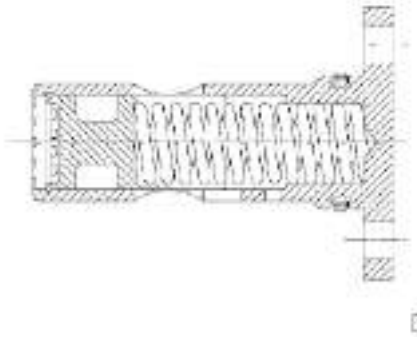

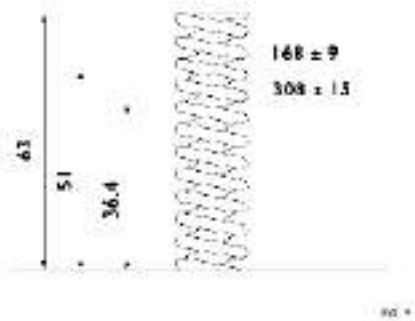

The oil pressure control valve is located on the left side of the crank case

The initial start pressure is 5 bars.

Check the major specifications of the oil pressure control valve.

Oil cooler

Figure 13

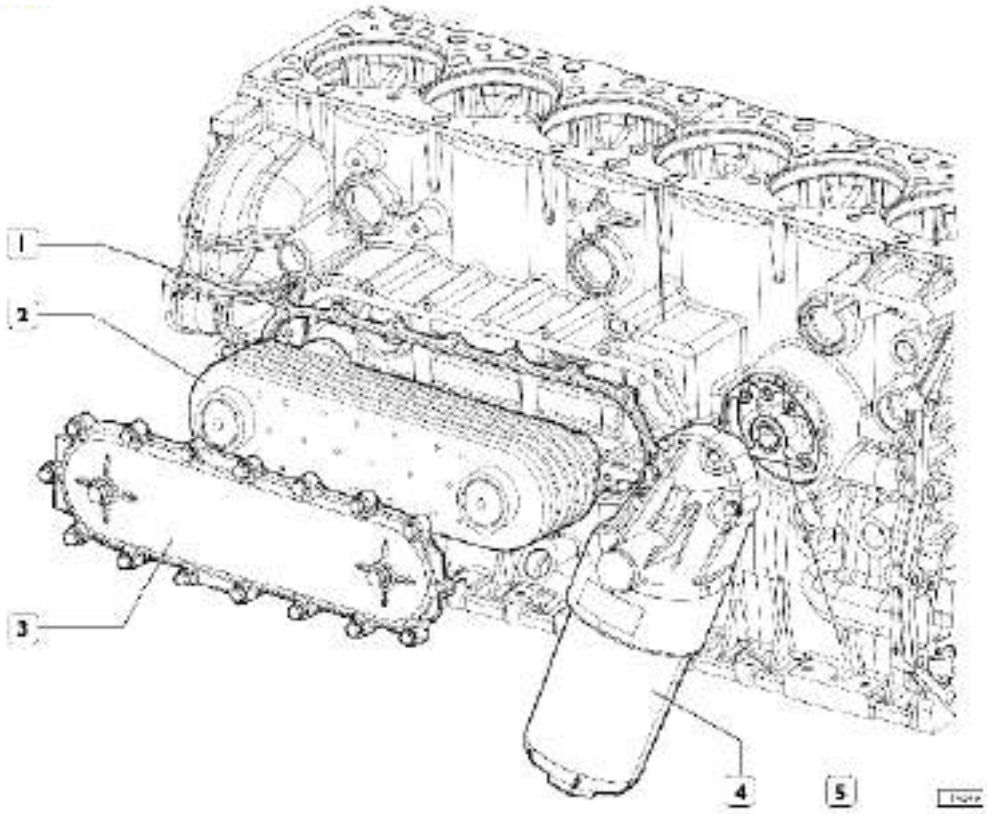

Oil filter

Figure 14

1. Sealing gasket of the oil cooler 2. oil cooler 3. oil cooler cover
4. Oil filter 5. sealing gasket for the oil filter seat

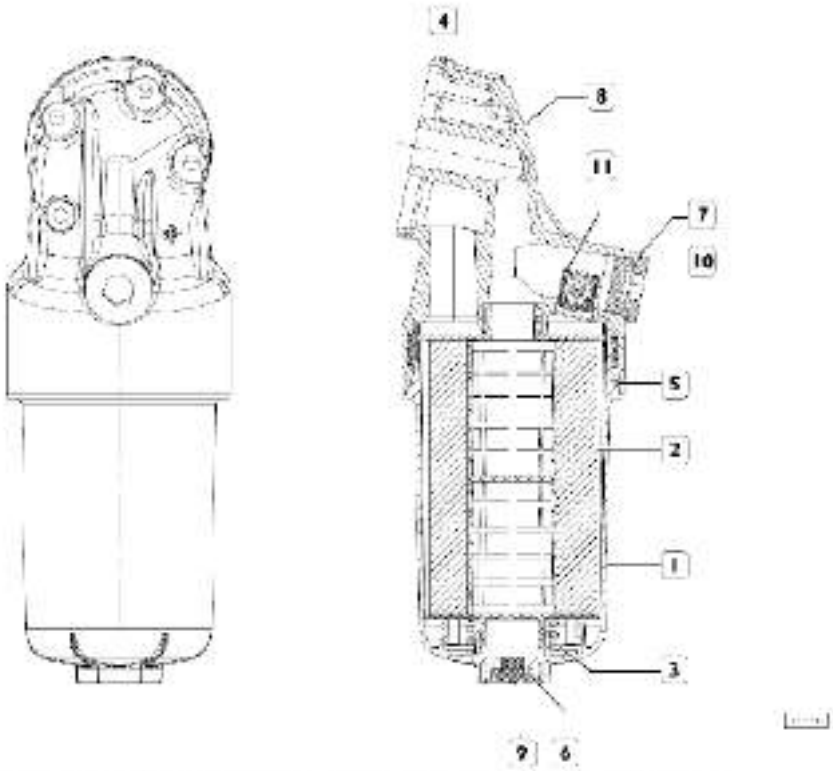

1. Filter cover 2. filter element 3. spring 4. O-ring for the mounting 5. O-ring for the cover 6. washer 7. washer 8. mounting 9. Plug M14x1.5 10. plug M38x1.5 11. bypass valve 3.4 bars

Features

1. Maximum working pressure: 13 bars
2. Working temperature: -30ºC ~ +120ºC
3. Opening pressure of the bypass valve: 3,4 ± 0,3 bar

Tightening torque

Filter cover (1):	60 ± 5 Nm
Plug (9):	30 ± 5 Nm
Plug (10):	90 ± 5 Nm

Installation specifications

Apply thread adhesive to the plug (10).

Filter bypass valve

Figure 15

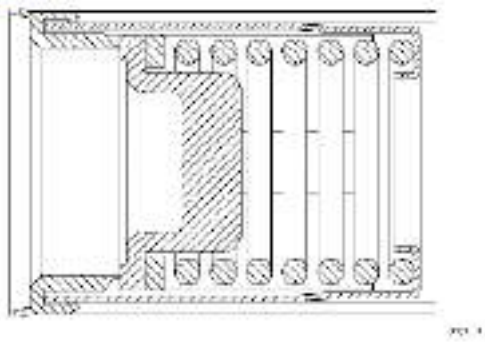

The valve opens quickly; the opening pressure is 3.4 ± 0.3 bars.

Change the oil filter element

Removal

Figure 16

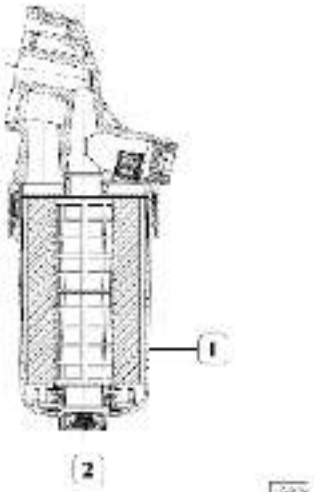

Remove the plug (2).
Loosen the screws on the filter cover (1) several turns and wait for some minutes.
At this moment, the residual oil in the filter cover drops first, and then flows out slowly.
Fully remove the filter cover and change the filter element.

Figure 18

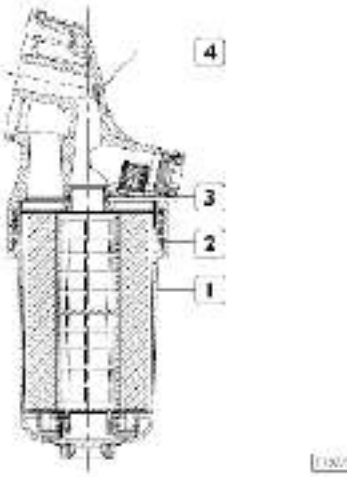

Engage the thread of the filter cover (1) with the thread of the mounting (4) (the ventilating hole on the element top plate should be in contact with the oil outlet pipe on the mounting).Tighten the filter cover (1) on the mounting (4).At this moment, the sealing washers on the element top plate (3) and filter cover (2) should start work gradually. Tighten the filter cover to a torque of 65 N.m.

Reinstallation

Figure 17

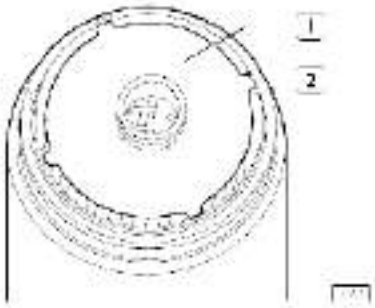

Insert the filter element into the filter cover with the flange (2) of the filter element top plate (1) aligning with the corresponding position of the cover, then press the element into the filter cover. At this moment, the flange on the top place slips into the cover.

Figure 19

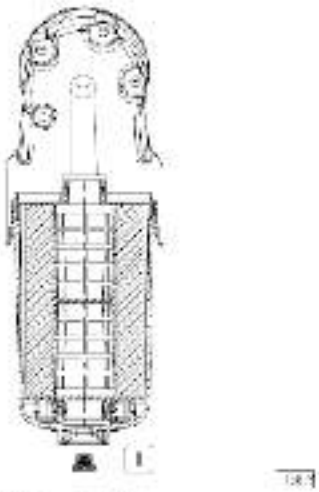

Fix the plug (1) onto the filter cover and tighten.

Ventilation system of the crank box

Some of the gas, produced by combustion during the running of the engine, leaks into the oil pan through the opening of the piston ring and forms oil mist. This rises up along the gear chamber and reaches the position of the timing gear of the camshaft located on top of the gear chamber.

The centrifugal filter element mounted on the camshaft timing gear separates the oil from the mist by the centrifugal force produced by spinning.
The gas, with oil separated from it, flows into the vent pipeline of the camshaft through the oil throw plate.
The flow of the oil mist is controlled by the blow-by valve on the front of the cylinder head.

Figure 20

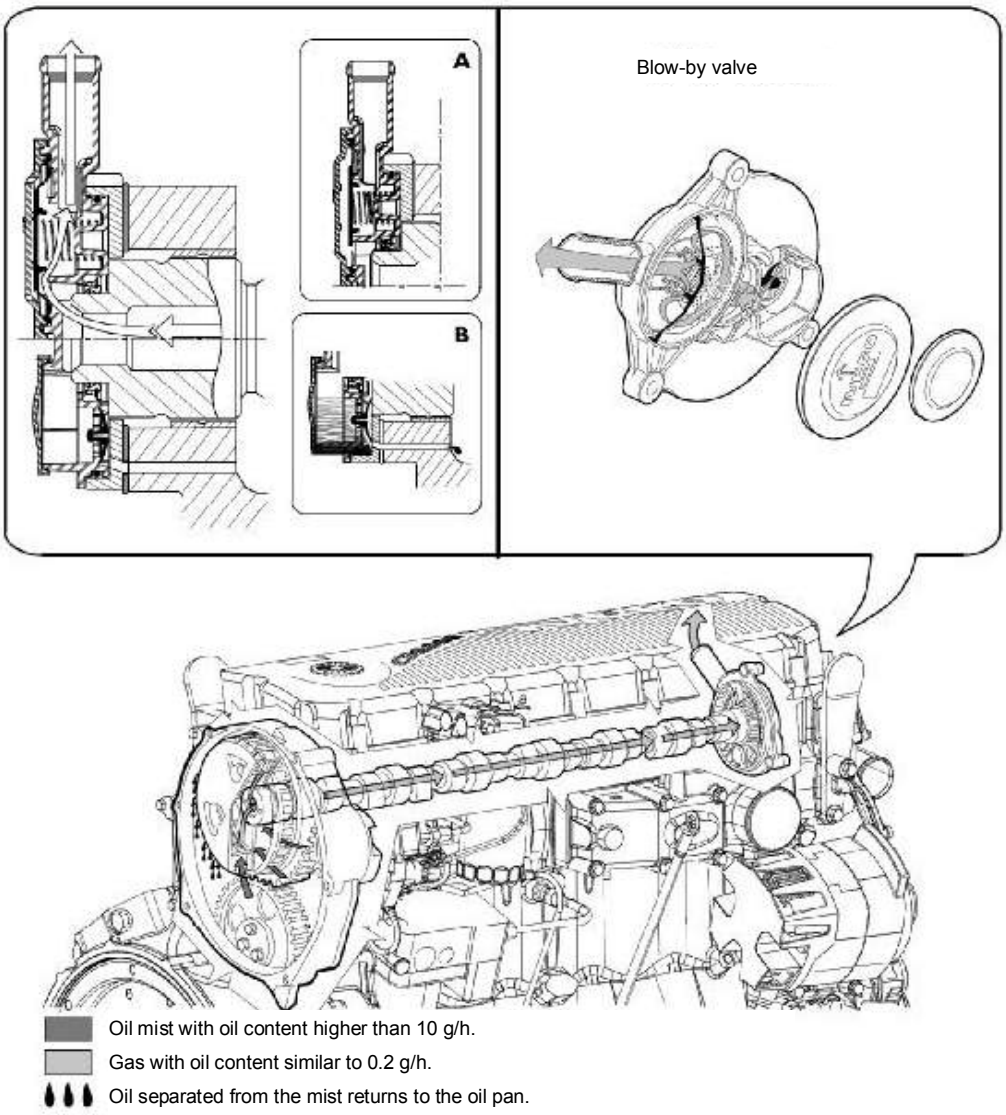

Cooling system

Description

The engine cooling system is of the closed type forced circling system.

It mainly consists of the following components:

- Expansion water tank (self-prepared)
- Radiator, used to reduce the coolant temperature.
- Water pump: its centrifugal system is built in the cylinder block;
- Fan, self-prepared;
- Double-way thermostat, used to control the coolant circle.

Operation

The water pump is driven by the crankshaft through the poly-V belt, delivers the coolant to the cylinder block, esp. to the cylinder head (plenty).When the temperature reaches and/or exceeds the set value, the thermostat starts. The coolant flows into the radiator from the thermostat and is cooled by the fan.

The pressure variation of the system (caused by the temperature variables) is controlled by the expansion tank.

Figure 21

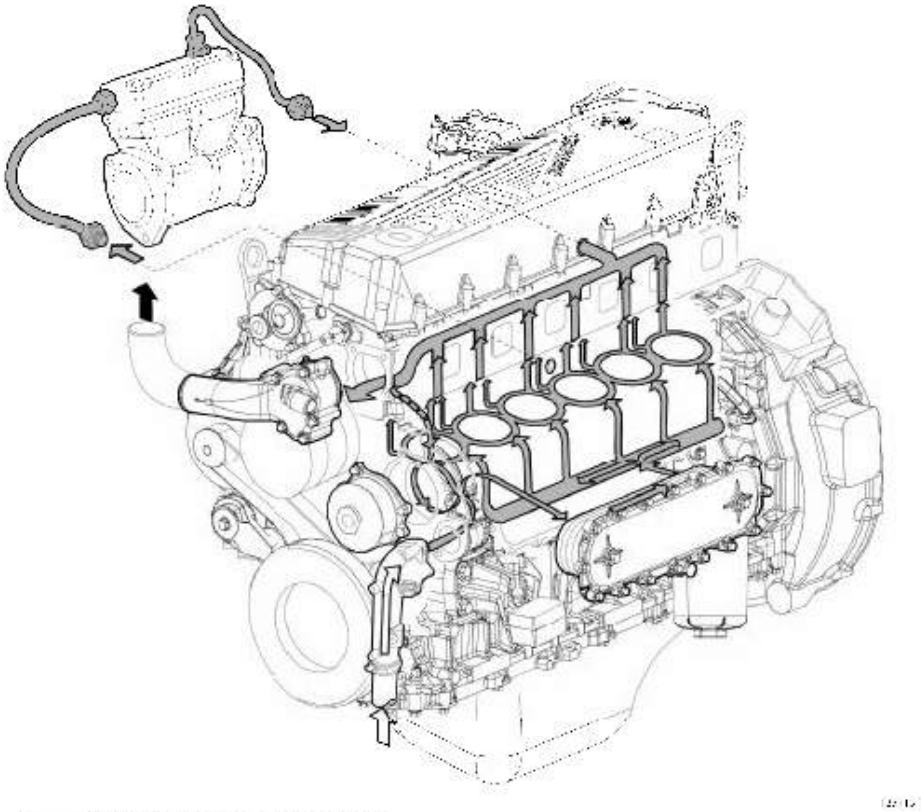

Water flowing out of the thermostat

Water circulating in the engine

Water flows out from the thermostat.
Water circles in the engine.
Water flows into the water pump.

Water pump

Figure 22

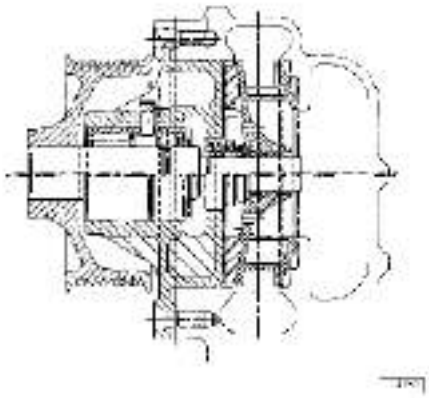

Sectional drawing of the water pump

The water pump is comprised of: Rotor, shaft and bearing, T gasket and driving pulley with dust cover.

Note: *Check the pump body for cracks and leakage. If yes, change the entire water pump ASSY.*

Figure 24

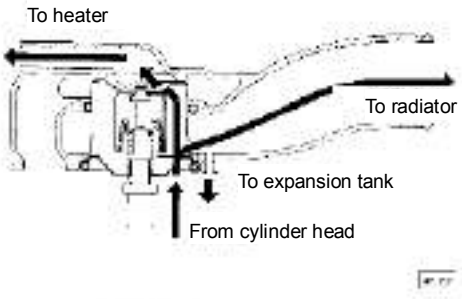

Water flows out from the thermostat.

Check if the thermostat is functioning normally. Please replace anything questionable.

Initial opening temperature 84ºC ± 2ºC.

Fully open at temperature conditions of 94ºC ± 2ºC.

The minimum travel is 15mm.

Thermostat

View of thermostat operation

Figure 23

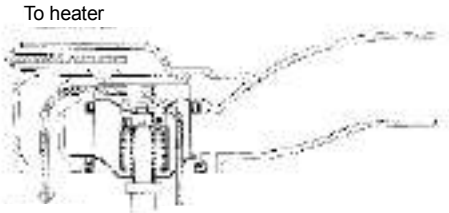

To by-pass valve From cylinder head

Water circles in the engine

Turbo charging system

Figure 25

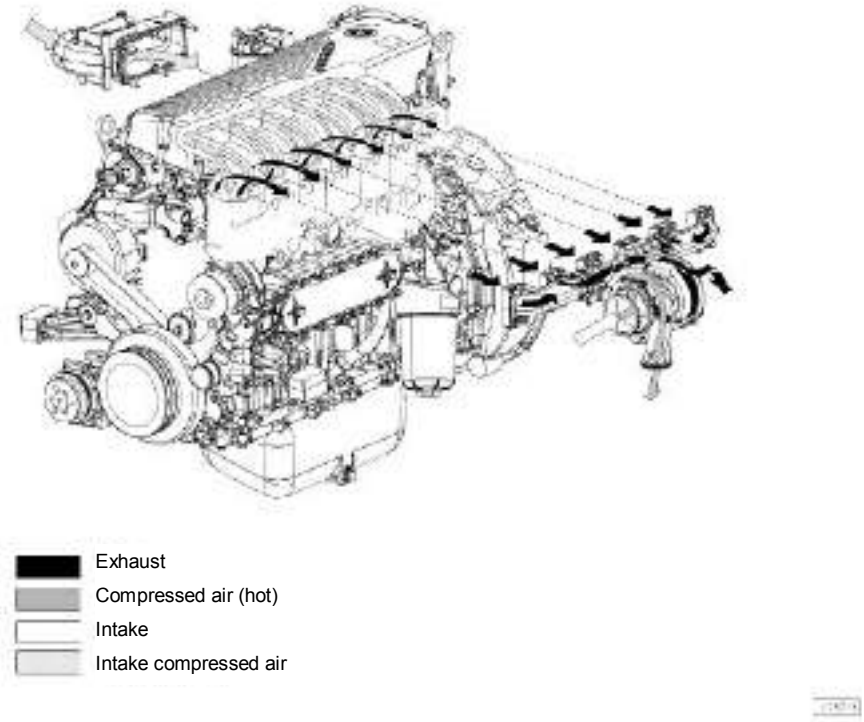

The turbocharging system consists of:

- Air filter
- Exhaust gas turbo charger
- Inter-cooler

Description

The turbo charger is mainly comprised of: Turbine, regulator valve (used to regulate the turbocharging pressure of the intake), intermediary and compressor.

During the engine operating process, the exhaust gas is discharged from the turbine, driving the turbo to rotate.

The rotor connected to the turbo by the pivot rotates with the turbo and intakes and compresses the gas filtered by the air filter.

Then, the compressed air, cooled by the inter-cooler, flows into the cylinder through the intake manifold.

The turbo is equipped with a regulator valve located in the exhaust intake port of the turbine, and connected to the compressor by the vacuum line and controller.

The function of the regulator valve is: When the intake turbocharging pressure of the compressor reaches a specified valve, the regulator valve will open and part of the exhaust gas will be discharged into the exhaust pipe directly.

The turbo charger and bearing are cooled and lubricated by oil.

Variable geometry turbocharger

(applicable with engine F2CE0681A*…)

Operational principle

Variable geometry turbocharger (VGT) includes a centrifugal compressor and a turbine and is equipped with a mobile device.

The device adjusts the rotation speed by changing the exhaust gas blow-by area of the turbo. When the exhaust gas is passing through a narrow passage, the gas will flow more quickly, thus the turbo will rotate more quickly. Through this, even though the engine is running in idle, the gar flow speed and the turbo rotation speed can be increased.
levice is driven by pneumatic actuator.
actuator is directly controlled by the ECU through the solenoid valve.
It is fully closed at idle speed. When the engine is running at high speed, the device will be driven by the electronic control system and increases the gas blow-by area of the turbo, thus guaranteeing the intake air flow will not accelerate.
There is a cavum for the coolant to flow in the intermediary.

Actuator

Figure 26

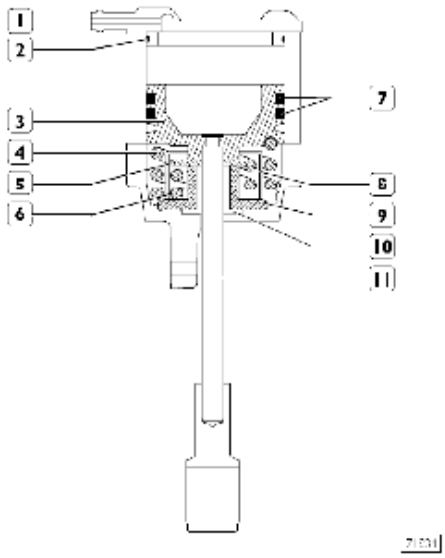

1. intake port 2. washer 3. piston 4. outer spring
5. inner spring control disc 6 inner spring 7 O-ring
8. spring holder 9. stopper 10. dust seal 11. control rod

Figure 27

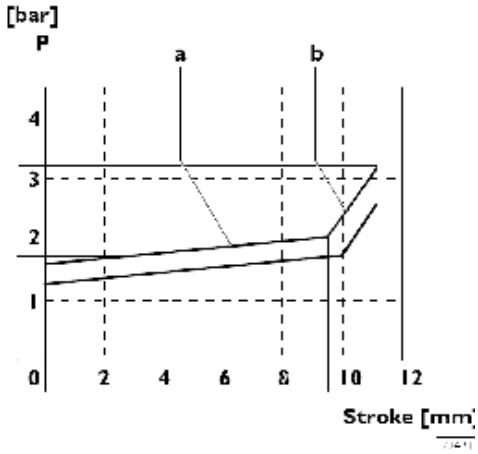

a Slope featured on the outer spring (4, Figure 25).
b Slope featured outer spring (4, Figure 25) and inner spring (6, Figure 25).

Operational principle (refer to Figure 25):

To control the piston motion of the actuator by the compressed air entering through the intake port (1) in the top of the actuator.
The air pressure adjustment will change the motion of the piston and turbine drive rod. The movement of the piston further compress the outer spring (4) until the piston base reaches the control disc (5) controlling the inner spring (6).
Further increasing the pressure, the piston disturbs the stopper (10) through the control disc (5).
The ratio of the piston travel and pressure can be changed by two springs. Approx. 85% of the rod travel is driven by the outer spring and 15% by the inner spring.

VGT Solenoid control valve

This digital proportional solenoid valve is located on the cylinder block.
The electronic control module controls the solenoid valve and the supply pressure of the control actuator by PWM Signal control solenoid valve, the changing of the position of the electronic control module will transfer the section the exhaust gas passing by to the impeller blade, therefore changing the exhaust gas flowing speed.
The resistance of the coil is approx. 20-30 Ohms.

Fuel supply system

The common rail fuel supply system is equipped with a special pump. This pump can guarantee that the fuel in the common rail maintains at a constant high pressure regardless of the injection conditions and state.
Therefore, fuel at the electric injector intake port is always under the injection pressure (calculated by the engine control unit ECU).
The solenoid valve of the injector is controlled by the ECU.
Figure 1

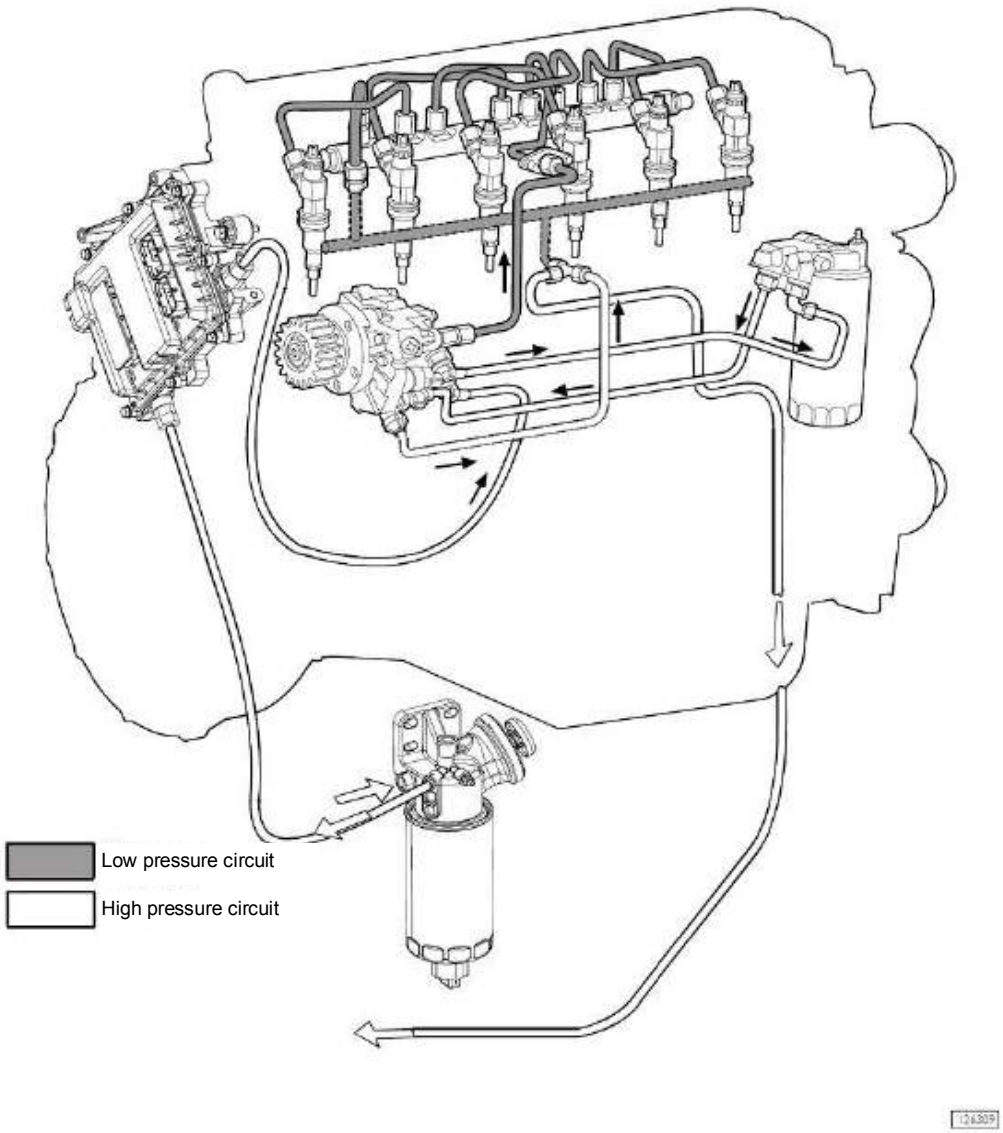

Fuel supply diagram

Figure 2

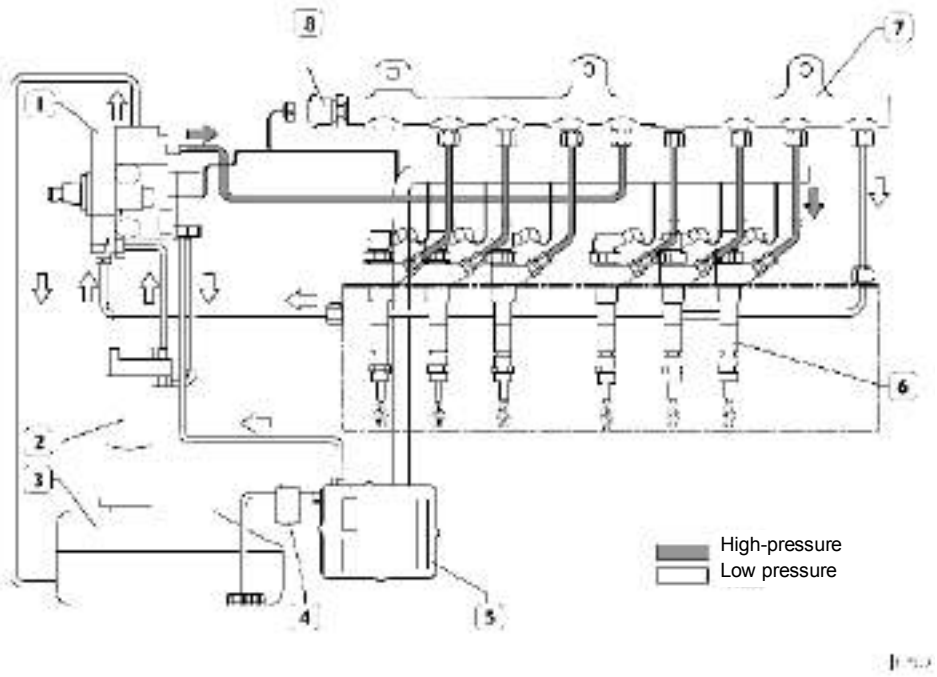

1. high-pressure pump 2. fuel filter 3. fuel tank 4 fuel prefilter 5 ECU 6. electric injector
7. common rail 8. common rail pressure sensor

After the high-pressure pipeline is installed, please keep checking the oil level in the first 20 hours (the oil level can't rise).

Mechanical fuel pump

The fuel pump is mounted behind the high-pressure pump to deliver fuel to the high-pressure oil pump. The fuel pump is controlled by the high-pressure oil pump shaft.

Normal operation condition

Figure 3

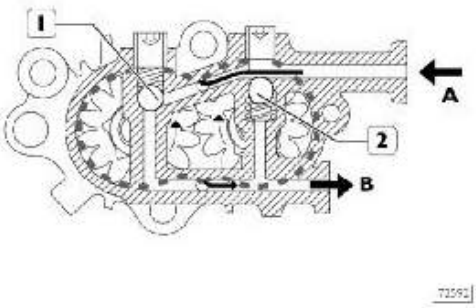

A fuel from the fuel tank B 1-2 bypass valve to the filter (in Closed position).

Over-pressure condition at the outlet

Figure 4

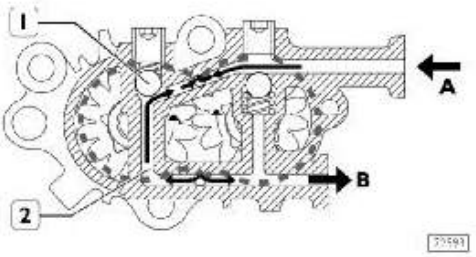

When the pressure of B is too high, the bypass valve (1) will open. Thus A and B are connected by the passage (2).

Manual fuel supply condition

Figure 5

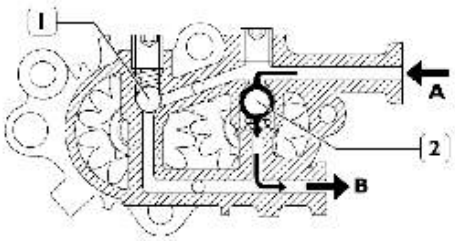

When operating the manual fuel pump to supply fuel to the system, the bypass valve (2) opens. By this time, the engine is off and the bypass valve (1) remains in the Closed position, while bypass valve (2) is forced open by the pressure of A. The fuel flows out from B.

Note: *Independent change of the mechanical fuel pump is not allowed; therefore don't remove it from the high-pressure pump.*

CP3 high-pressure fuel pump

The high-pressure fuel pump hash (3) radial plugs controlled by the high-pressure fuel pump gear need no additional setting.

The mechanical fuel pump is mounted behind the high-pressure pump and controlled by the high-pressure pump shaft.

The following operations must be carried out on the fuel pump/high-pressure fuel pump ASSY:

- Replace the high-pressure fuel pump gear;
- Replace the regulator.

Figure 6

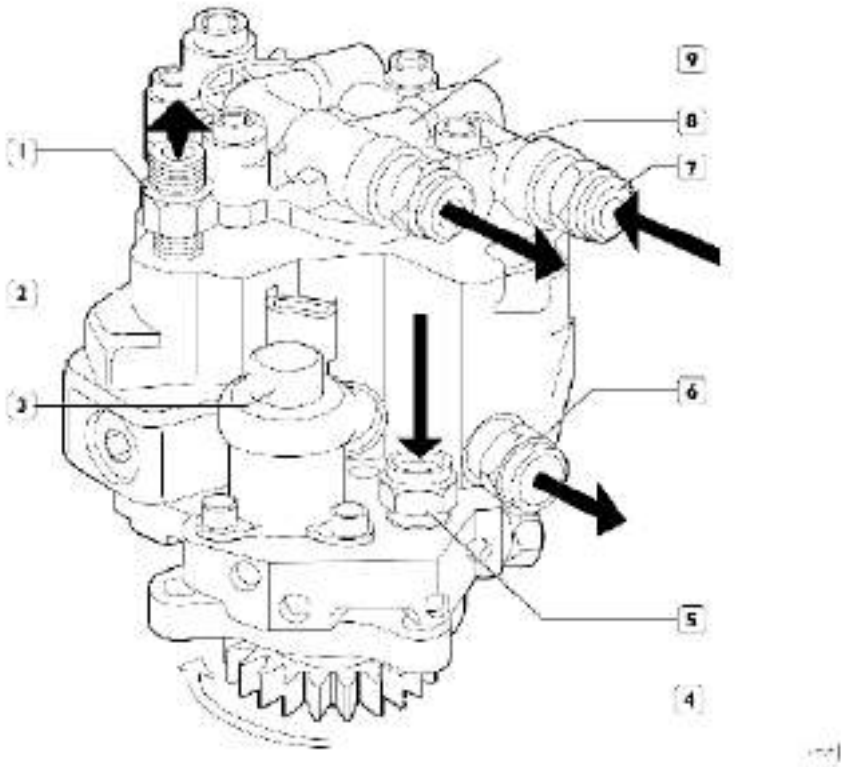

1. outlet port (to common rail) 2. high-pressure fuel pump 3. regulator 4. high-pressure fuel pump gear 5. intake port (from filter) 6. outlet port (to oil return pipe) 7. intake port (from ECU base) 8. outlet port (to filter)
9. Mechanical fuel pump

High-pressure fuel pump – internal configuration
Figure 7

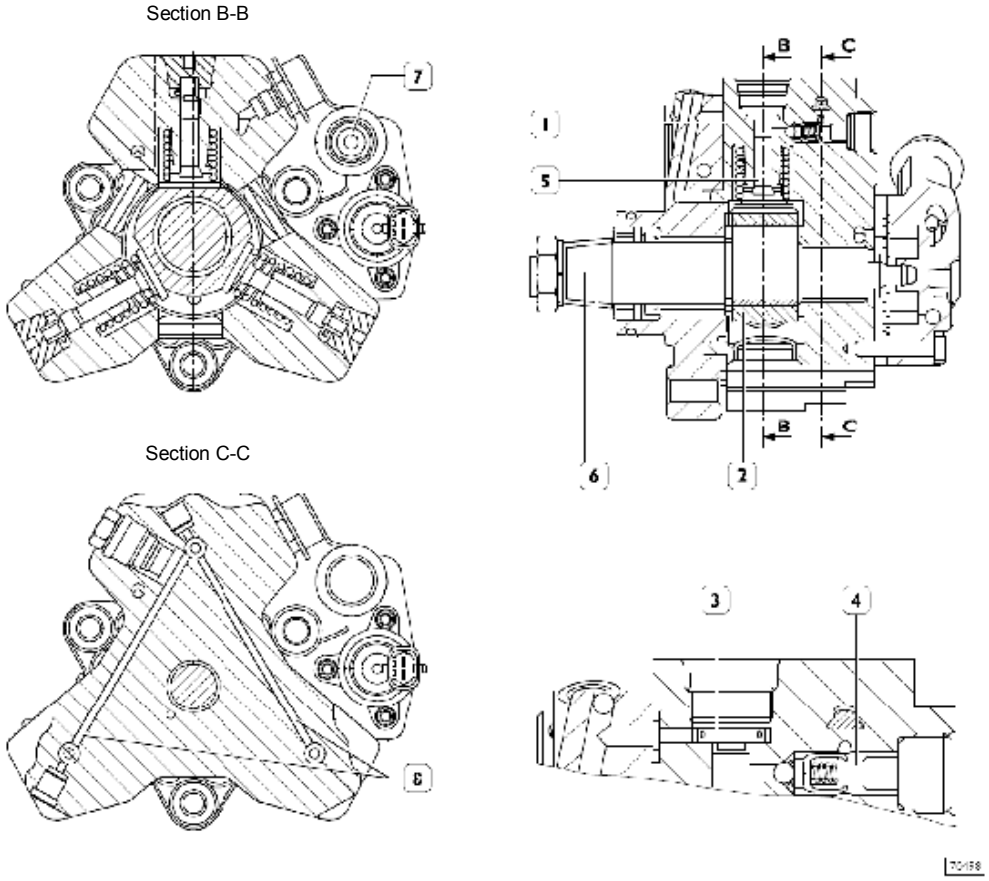

1. High-pressure cavum 2.triple-vane camshaft 4. ball-type outlet valve 5. piston 6. pump shaft 7. low pressure fuel intake port 8. fuel supply pipeline

Each high-pressure cavum includes:

- Piston (5) driven by the triple-vane camshaft (2) floating on the pump shaft (6).The camshaft (2) is floating on the misaligned part of the pump shaft (6).When the pump shaft is turning, the camshaft doesn't follow it, but moves rotationally on a larger radius, thus alternatively driving the three pump components.
- Intake valve (3)
- Ball-type outlet valve (4).

Figure 8

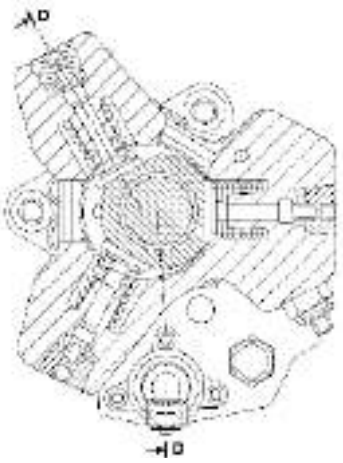

Section B-B

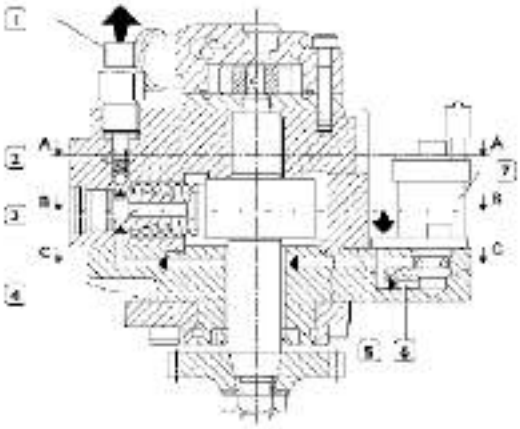

Section D-D

1. Outlet port (to common rail) 2. outlet valve 3. piston 4 pump shaft 5 fuel supply pipeline
6 fuel supply pipe to the regulator 7 regulator

The piston (3) faces to the pump shaft (4) cam.
During the fuel supply process, the piston is fed by the fuel supply pipe (5).The fuel volume supplied to the piston is controlled by the regulator (7).The regulator calculates the fuel flow supplied to the piston according to the PWM signal given by the ECU. During the piston compression process, when the fuel reaches the needed pressure valve, the outlet valve (2) will be opened and supply will go to the common rail through the outlet (1).

Figure 9

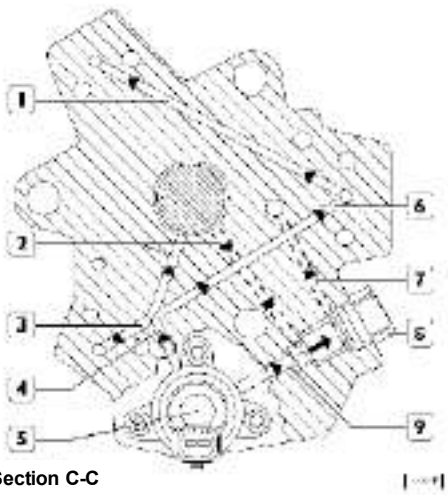

Section C-C

1. Fuel supply passage 2 lubrication passage, 3 fuel supply passage 4 main fuel supply pipe 5 regulator 6 fuel supply pipe 7outlet pipes of the regulator 8 pressure (5bars) release valve 9 outlet pipe (from the regulator intake)

Figure 9 illustrates the low-pressure fuel passage inside the pump and shows, in particular, the following components: Main fuel supply pipe (4), fuel supply pipe (1-3-6), lubrication pipe (2), regulator (5), 5 bars pressure release valve (8), outlet pipe (7)
The pump shaft is lubricated by fuel from lubrication pipe (2).
The regulator (5) determines the fuel volume to be delivered to the piston. Excessive fuel will be discharged through the outlet pipe (9).
The 5 bar pressure release valve is used to discharge the excessive fuel and to maintain the pressure at the intake port of the regulator at 5 bars.

Figure 10

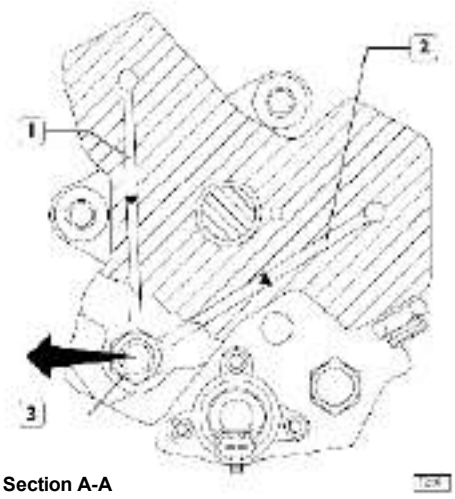

Section A-A

1. Fuel outlet pipe 2 fuel outlet pipe 3 outlet union (to common rail)

Figure 10 illustrates the high-pressure fuel passage inside the pump.

Operation
When the fuel supply pressure reaches a value high enough to open the outlet valve on the pump (about 2 bars), the high-pressure cavum will be filled up through the excessive fuel valve.
The fuel volume delivered to the high-pressure cavum is controlled by the regulator. The regulator is mounted in the low-pressure system and is controlled by the EDC7 through PWM signal.
When the fuel is delivered into the high-pressure cavum, the piston starts downward movement (fuel intake stroke)When the piston stroke changes, the intake valve closes, the fuel inside the cavum (unable to be discharged) is compressed, the pressure is higher than the present supply pressure in the common rail.
Then the outlet valve is forced open and the compressed fuel flows into the high-pressure circuit.
The piston continues to compress the fuel until it reaches the top dead center (TDC) (fuel supply stroke).Thereafter, the pressure falls until the outlet valve closes.
The piston returns to the bottom dead center and the residual fuel will be decompressed.
When the cavum pressure is lower than the supply pressure, the intake valve will open again and repeat the above-described circulation process.
The movement of the outlet valve must always be smooth. No foreign matter can be in the outlet valve and it must be free from oxidation.

The common rail pressure is controlled by the regulator.
This high-pressure pump is lubricated and cooled by the fuel.
Compared with the conventional high-pressure pump, the disconnecting-reconnecting time is greatly reduced because the engine radial compress pump is free from any setting.
If the passage between the fuel filter and high-pressure pump needs to be removed and restored, make sure the hands of the operator and the components are absolutely clean.

Common rail pipe (pressure accumulator)

Figure 11

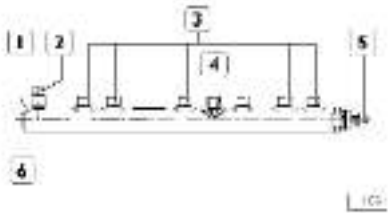

1. Common rail pipe 2. oil return union 3. outlet union (to injector) 4. supply union (from high-pressure pump) 5. pressure sensor 6.safety valve

In situations of starting, idling and high-speed running, employ small common rail volume so that the system can be quickly charged.
However, the common rail has adequate capacity, so as to minimize the usage frequency of the gas gathering cavum (caused by the injector On-off operation and the high-pressure pump operation).This function is activated by the calibration hole at the bottom of the high-pressure pump.
A pressure sensor (5) is mounted on the common rail pipe. This sensor transmits feedback signals to the ECU. The ECU checks the common rail pressure according to the signals received. It then rectifies it if necessary.

Electric injector

Figure 12

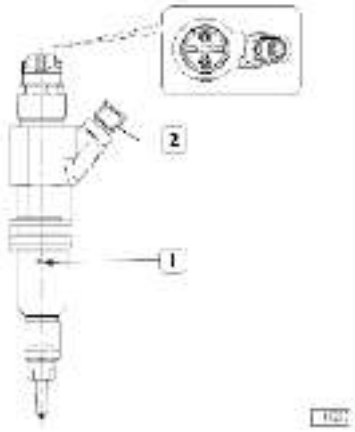

1. Fuel return hole 2. fuel intake port

Assembling and disassembling the engine

Technical specification

	Item	Technical code
	Engine Code	**F2CE0681A***
	Circulation	4-stroke Diesel engine
	Intake mode	turbocharging
	Fuel injection	Direct injection
	Cylinder number and arrangement	6 in-line arrangement

	Bore mm	
	Stroke mm	
	Cubic capacity cm^3	
	Compression ratio	
	Maximum power output kW (HP) rpm	
	Maximum torque Nm (kgm) rpm	
	Idle speed with no load rpm	
	Maximum revolution speed with no load rpm	
	Charging Turbocharging type	
	Oil pressure (hot engine) - idle speed bar - Max. revolution speed bar	 2 5
	Coolant Driving methods of the water pump Initial opening temperature of the **thermostat** ℃	Fluid By belt 85

	Item	**Technical code**
	Engine Code.	**F2CE0681A***
	Circulation Intake mode Fuel injection	4-stroke Diesel engine turbocharging Direct injection
	Cylinder number and arrangement	6 in-line arrangement

Cylinder number and arrangement		
Bore	mm	
Stroke	mm	
Cubic capacity	cm^3	
Compression ratio		
Maximum power output	kW (HP) rpm	
Maximum torque	Nm (kgm) rpm	
Idle speed with no load	rpm	
Maximum revolution speed with no load	rpm	
Charging		
Turbocharging type		
Oil pressure		
(hot engine)		
- idle speed bar	bar	
- Max. revolution speed	bar	
Coolant		Fluid
Driving methods of the water pump		By belt
thermostat		
Initial opening temperature	℃	85

Item	**Technical code**
Engine Code.	**F2CE0681A*B…**
Circulation	4-stroke Diesel engine
Intake mode	turbocharging

Engine characteristic curve

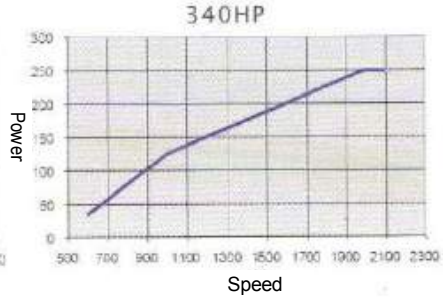

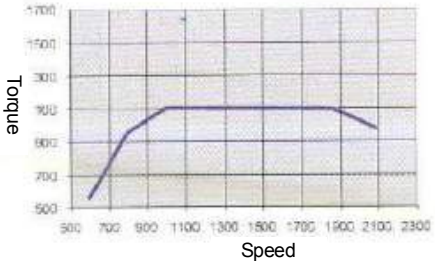

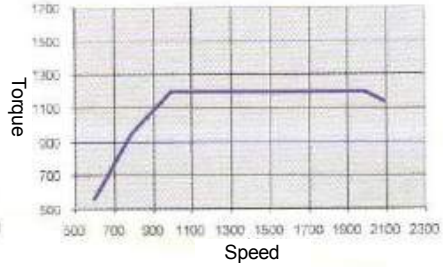

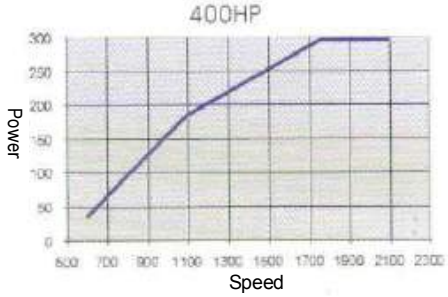

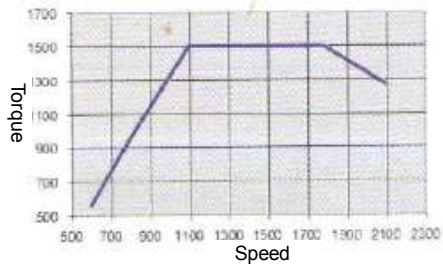

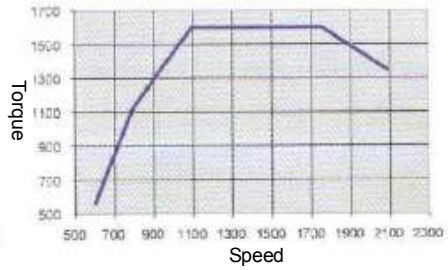

Assembling and disassembling the engine

Assembling and disassembling the engine on stand

Note: *Remove components which may affect the mounting of support bracket 99361042 before assembling engine on the rotating bracket 99322230.Remove the oil radiator (2) and the return pipe of the charger* (1) *as shown below.*

Figure 1

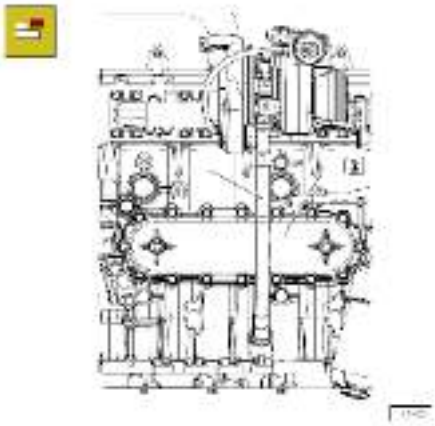

Place a suitable container under the oil radiator (2) to store the engine coolant that drains out.

Unscrew the tightening bolt and remove the oil radiator ASSY (2).
Remove the return pipe of the charger (1).
Mount the engine onto the rotating bracket 99322230.
Drain the oil in the oil pan to a specific container.

Figure 2

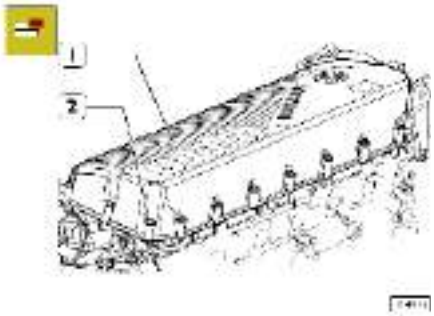

Unscrew tightening bolt (2), remove the cylinder head cover (1) to enable removal of the injector and the common rail harness.
Remove the entire harness.

Figure 3

Remove the fan because the air-con compressor belt (1) cannot be reused, cut off the belt.
Use a special tool (4) and move it in the direction of the arrow to remove the water pump and alternator belt (5).
Unscrew the bolt and remove the pulley (2) and the shock absorber (3).

Figure 4

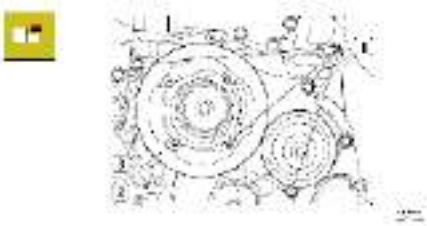

Remove the water pump (2), pulley (3) and screw (1).

Figure 5

Remove the following components:

- ❑ Alternator (6);
- ❑ Belt tensioner (5)
- ❑ Air-con compressor (1);
- ❑ Water inlet pipe (3);
- ❑ Belt tensioner (4)
- ❑ Thermostat ASSY (2).

Figure 6

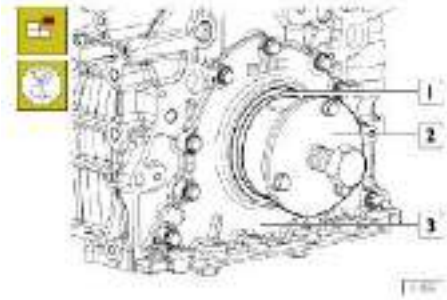

Disassemble the front oil seal of the crankshaft (1) by crankshaft front oil seal remover 99340051 (2). Unscrew the bolt, and remove the cover (3).

Figure 7

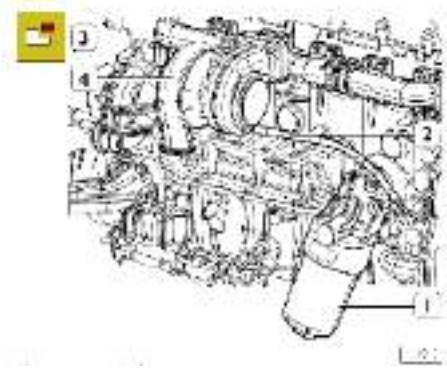

Remove the following components:

- ❑ Oil filter (1)
- ❑ Turbocharger intake pipe (2)
- ❑ Turbocharger (4) and outlet manifold (3).

Remove the alternator.

Figure 8

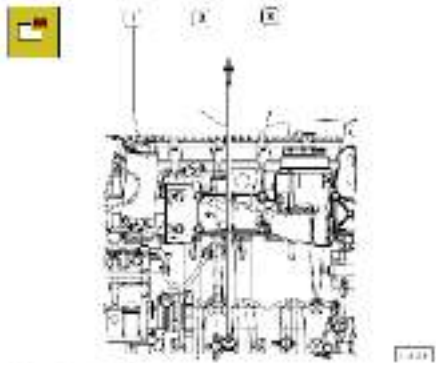

Remove the following components:

- ❑ Fuel filter (1)
- ❑ Oil dip stick (2);
- ❑ Intake manifold (3).

Figure 9

Disconnect the fuel pipe connection (1) from the high-pressure pump and remove the ECU (1) and it's seat.

Figure 10

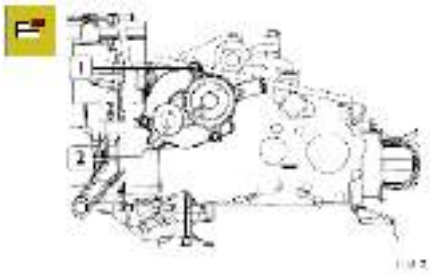

Remove the screw (1) and the exhaust gas blow-by valve (2).

Figure 11

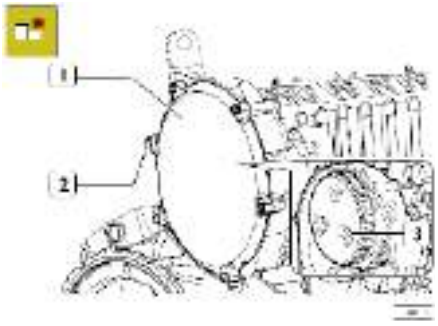

Loosen the screw (2), remove the gear chamber cover (1) and then the centrifugal filter element (3).

Figure 12

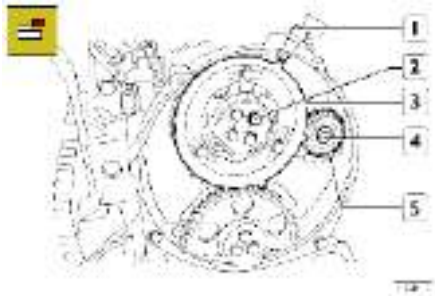

Loosen the screw (2) by wrench, fully remove the camshaft timing signal disc (3).
Unscrew the nut (4) and remove the high-pressure fuel pump gear (5).
Remove the camshaft speed sensor (1).
Note: *If it's difficult to remove the high-pressure fuel pump gear (5), tap slightly on the high-pressure fuel pump shaft, loosen the high-pressure fuel pump screw and then remove the high-pressure pump gear (5).*

Figure 13

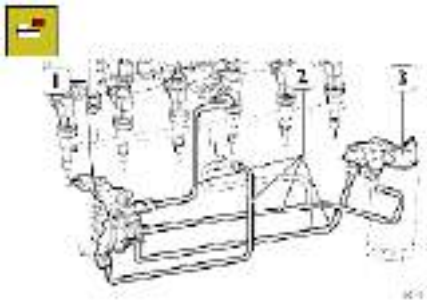

Disconnect the fuel pipe (2), and remove the high-pressure pump (1), then remove the fuel filter mounting (3) and fuel pipe.

Figure 14

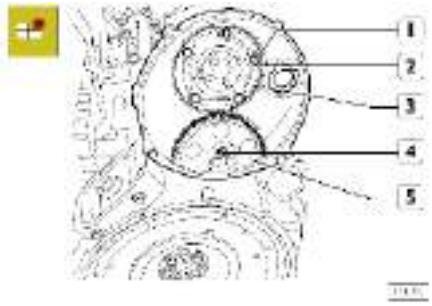

Loosen the screw (1), and remove the camshaft rear cover (2).
Loosen the screw (4) and remove the 1st intermediate gear (5).
Remove the mounting flange (3) of the high-pressure fuel pump.

Figure 15

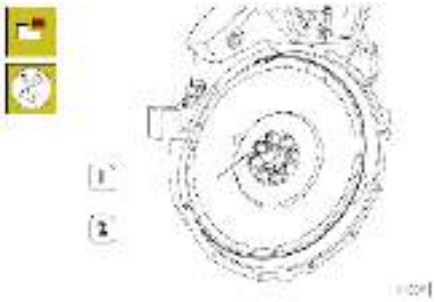

Lock up the engine flywheel (2) with the special tool, unscrew the tightening bolt (1) to remove the engine flywheel.

Figure 16

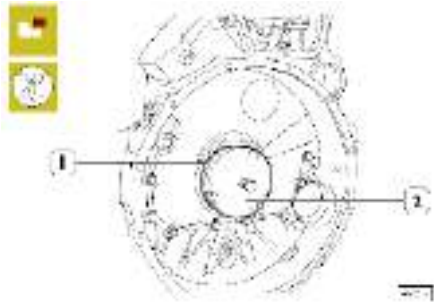

Remove the crankshaft rear oil seal (1) by crankshaft rear oil seal remover 99340054 (2).

Figure 17

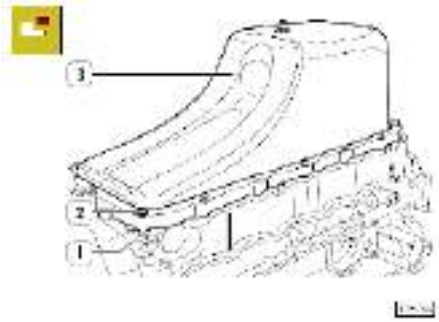

Unscrew the bolt (2), remove the engine oil pan (3), oil pan mounting (1) and the sealing adhesive.

Figure 18

Loosen the screws (1) and remove the oil strainer (2).

Figure 19

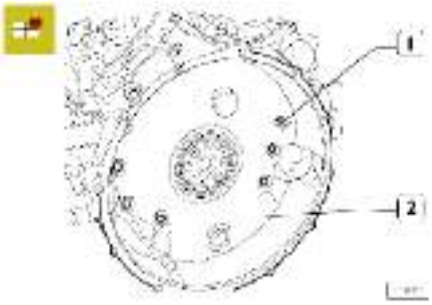

Loosen the screw (1), and remove the gear chamber (2).

Figure 20

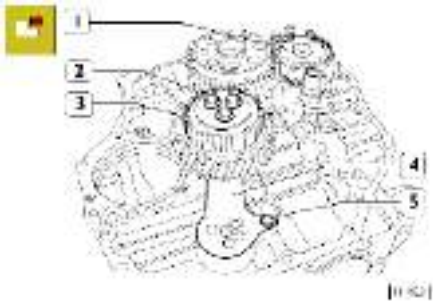

Remove bolt (2) and the 2nd intermediate gear (3).
Unscrew the bolt (5) and the small con rod (4).
Remove the oil pump (1).

Figure 21

Disconnect the fuel pipeline (3).
Remove the control spring (2) for the exhaust gas brake rod.
Loosen the tightening screw (1) of the rocker arm shaft.

Figure 22

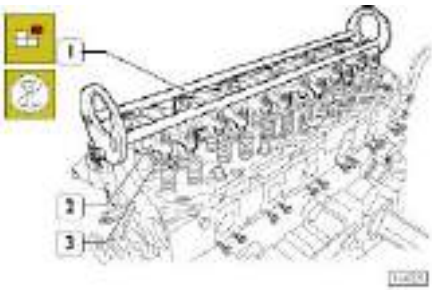

Remove the rocker arm shaft with tool 99360558 (1) and then the valve bridge (3).

Figure 23

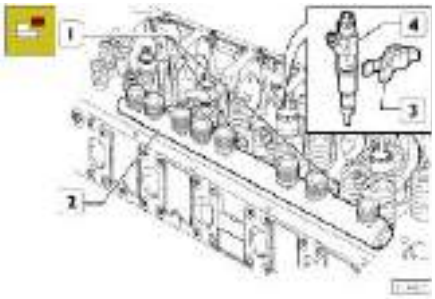

Remove the cage (3) and the injector (4).
Remove bolt (1) and the common rail (2).

Figure 24

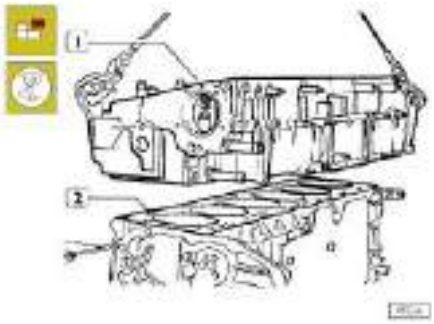

Remove the cylinder head bolt.
Lift the cylinder head (1) by steel rope and remove the cylinder gasket (2).

Figure 25

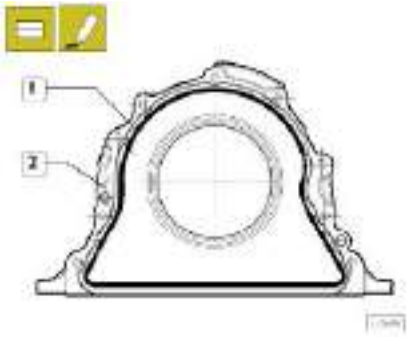

Clean the component surface for contaminants and residue. Apply sealant 5970 to the front end cover (2) shown in the picture.

The diameter of the sealant coating must be about 1.5mm.

Install the front end cover in 10 minutes after applying sealant.

Assembly

Figure 26

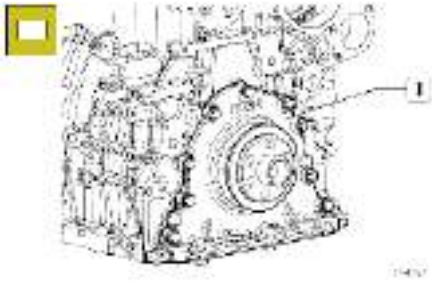

Install the front end cover (1); tighten the bolt to the specified torque.

Figure 27

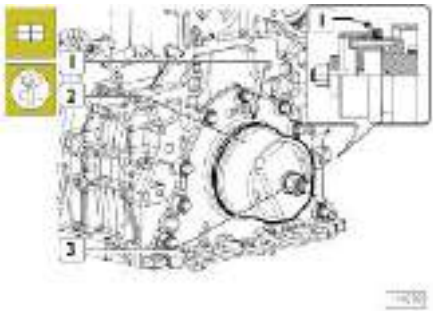

Fix the crankshaft front oil seal (1), tightening the nut (3) to mount the front oil seal in place with the special mounting tool 99346260 (2) for the crankshaft front oil seal.

Figure 28

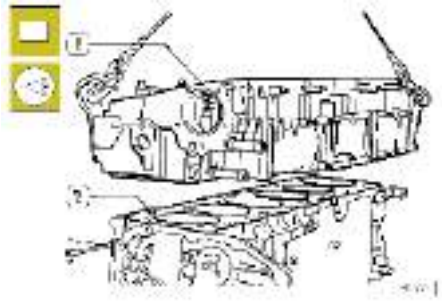

Check whether the piston of the 1st and 6th cylinder are at the top dead center (TDC).
Place the gasket (2) on the cylinder block.
Install the cylinder head (1) and tighten the cylinder head bolt as shown in the picture.

Reuse of the unscrewed cylinder head bolt is prohibited. Use only new cylinder head bolts.

Figure 29

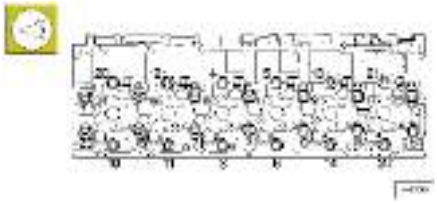

Tightening order of the cylinder head bolts

Figure 30

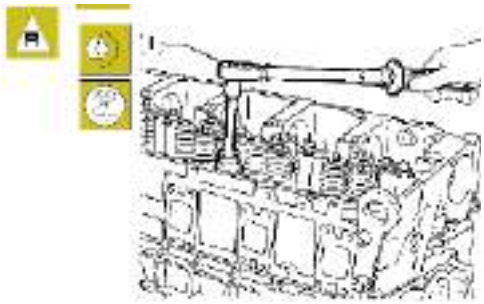

- Pre-tighten the cylinder head bolt by torque wrench (1)
  First step: 50 ± 2.5 Nm (5 ± 0.2 kgm)
  Second step: 100 ± 5 Nm (10 ± 0.5 kgm)

Figure 31

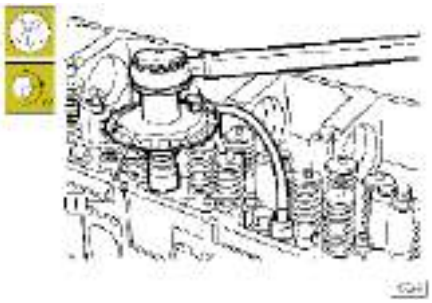

- Adjust the angle by the angle protractor 99395216 (1).
  Tightening:
  Third step: Angling: 90°± 4.5°
  Fourth step: Angling: 75°± 3.5°

Figure 32

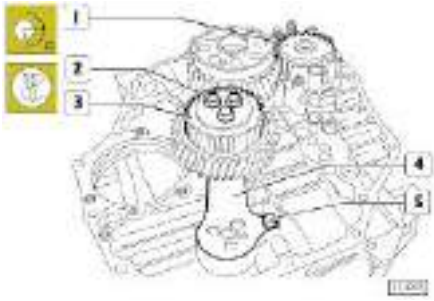

Install the oil pump (1), the 2nd intermediate gear (3) and small con rod (4), tighten the bolt (2) to torque 24.5 ± 2.5 Nm (2.4± 0.2 kgm).

Figure 33

Clean the component surface and get rid of contaminants and residue.

Apply sealant LOCTITE 5970 to the gear chamber (1) (as shown in the picture).

The diameter of the sealant coating must be 1.5 mm.

Note: *The gear chamber should be installed within 10 minutes after the sealant is applied.*

Figure 34

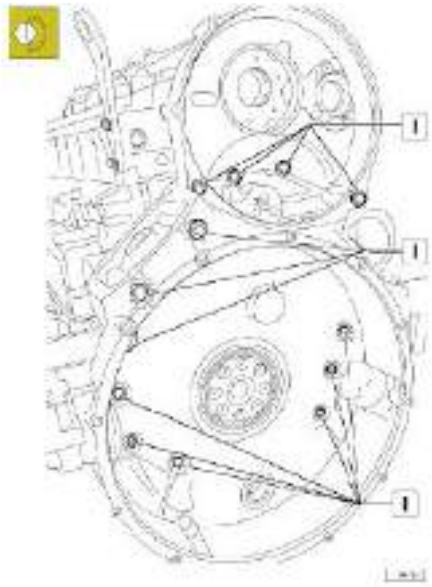

Tighten the bolt (1) to the specified torque.

Figure 35

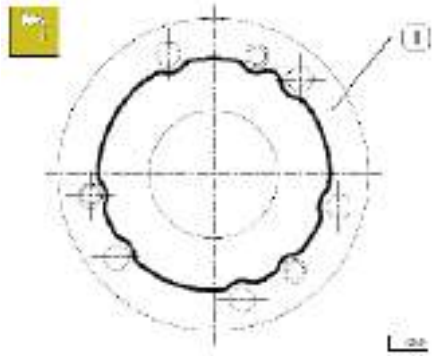

Clean the component surface, get rid of contaminants and residue.

Apply sealant LOCTITE 5970 to the mounting flange (1) of the high-pressure fuel pump (as shown in the picture).

The diameter of the sealant coating must be 1.5mm.

Note: *The mounting flange of the high-pressure fuel pump should be installed in 10 minutes after the sealant is applied.*

Figure 36

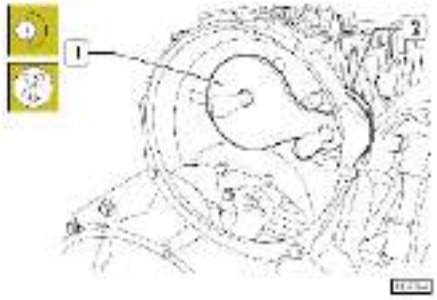

Adjust the position of the high-pressure fuel pump mounting flange (2) by the high-pressure fuel pump mounting flange positioner 99395221 (1).

Tighten the bolt to the specified torque.

Installation of the fuel pump

Figure 37

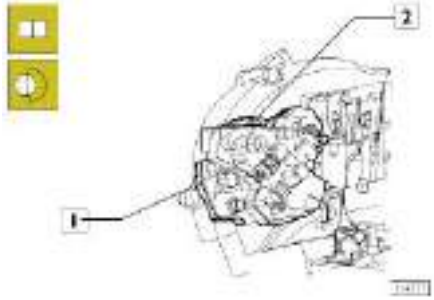

Mount the high-pressure fuel pump (1) to the flange (2).

Figure 38

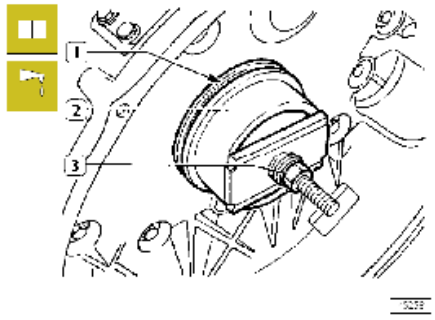

Assemble the crankshaft rear oil seal by the special tool 99346260 (2), tighten the nut (3) to fix the rear oil seal (1) in place.

Assembly of the engine flywheel

Note: *If the flywheel teeth used to start the engine is damaged, please change the ring gear.*

Reinstall the ring gear after it is heated to about 200℃.

The crankshaft is equipped with a positioning pin; this pin must match to the engine flywheel.

Figure 39

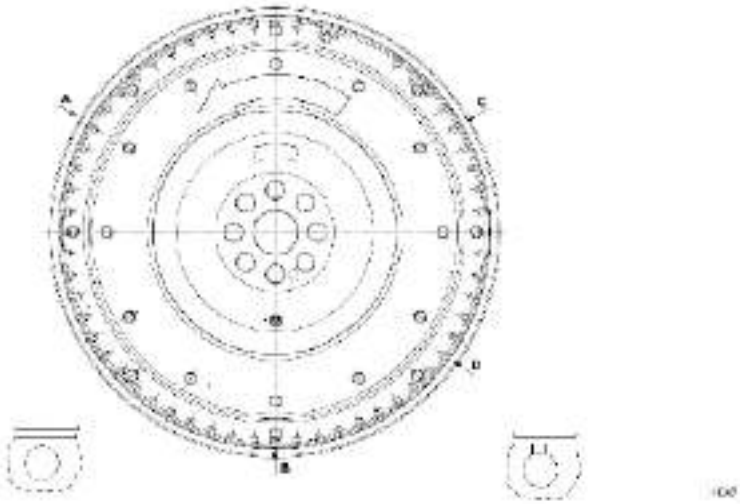

The position comparison diagram of the engine flywheel and piston

A – hole on the flywheel with a notch, corresponding to the TDC of the pistons of the 3rd and 4th cylinder;

B – hole on the flywheel with a notch, corresponding to the TDC of the pistons in the 1st and 6th cylinder;

C – hole on the flywheel with a notch corresponding to the TDC of the pistons of the 2nd and 5th cylinder;

D – hole on the flywheel with two notches corresponding to the 54°angle of the TDC of pistons of the 1st and 6th cylinder.

Figure 40

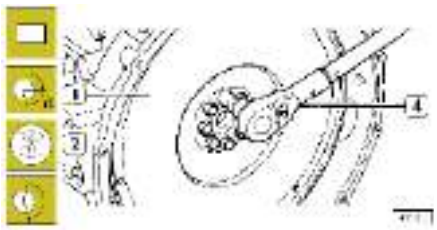

Install the flywheel (1) to the crankshaft; lubricate the bolt (2) thread with oil and tighten it.

Fix the flywheel with special tool.

Tighten the bolt (2) in two steps.

First step: Pretighten the screw with torque wrench (4) with torque at120 ± 6 Nm (12 ± 0.6 kgm).

Figure 41

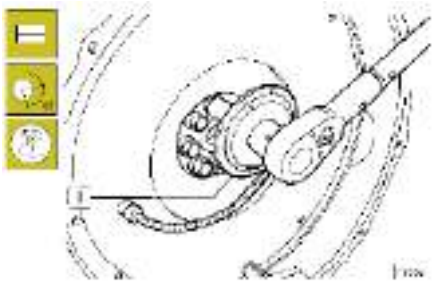

Step 2: Tighten the angle to 90°±4.5°by angle protractor 99395216(1).

Assembling the camshaft

Figure 42

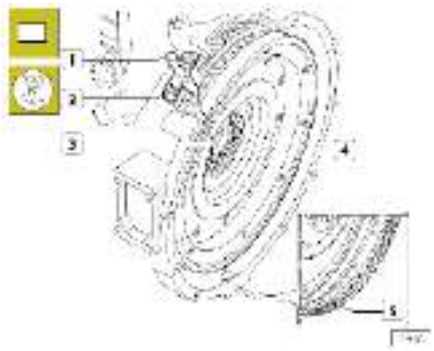

Make sure that the pistons of the 1st and 6th cylinder are at the TDC.
This can be verified by the following situation:

1. The hole with reference line (5) on the engine flywheel (4) is visible from the observing hole.
2. The flywheel lock pin 99360612 (1) can be inserted in the corresponding hole (3) on the engine flywheel (4) through the engine speed sensor case (2) .

If the reference line (5) is not visible from the observing hole, rotate the engine flywheel (4) until the line (5) can be seen from the observing hole.

Figure 43

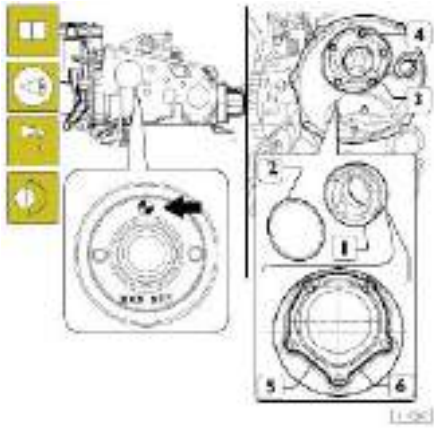

Assemble the camshaft (3) and positioning and adjust the positioning along the direction of the arrow (→)➡.
Clean the mating surface of the camshaft rear cover (1), clear up contaminants and residue.
As shown, apply sealant 5970 (6) to the camshaft rear cover (1).

Note: *Do not splash the sealant into the inner groove (5).*

The diameter of the sealant coating should be 1.5 mm. Assemble the camshaft rear cover (1) and seal ring (2) within 10 minutes after the sealant is applied, tighten the bolt (4) to the specified torque.

Figure 44

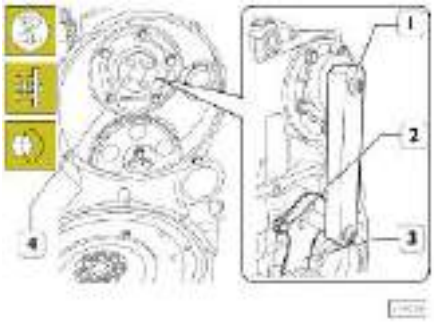

Adjust the positioning of the small con rod (3) with the small con rod positioner 99395222 (1).Tighten the bolt (2) to the specified torque.

Figure 45

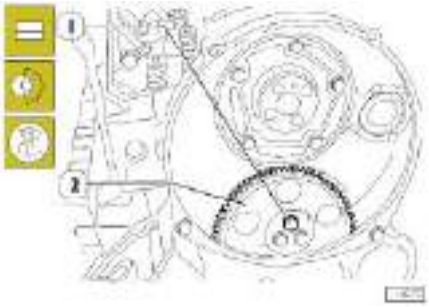

Install the 1st intermediate gear (2), tight the bolt (1) to the specified torque.

Note: *Replace the bushing of the 1st intermediate gear* (2) *if it's worn. Rub out 58.010 ±0.10 mm of the diameter after the bushing is fixed.*

Camshaft and flywheel timing (use timing tool 99395223)

Camshaft timing

Figure 46

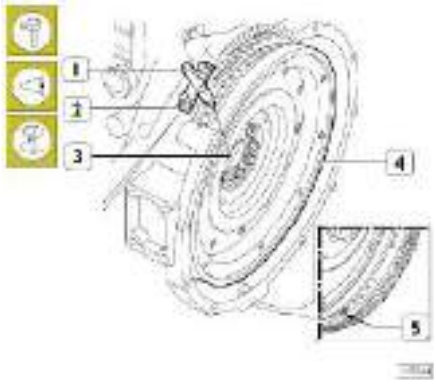

Rotate the crankshaft with the flywheel rotation tool 99360341 and the hole with two reference lines (5) will be visible from the lower observing hole of the gear chamber.
At this moment insert the flywheel lock pin 99360612 (1) into the corresponding hole (3) on the engine flywheel (4) through the engine speed sensor hole (2).

Figure 47

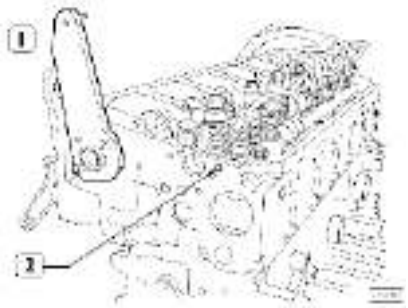

Install the timing tool 99395223 (1) in the front of the camshaft.

Figure 48

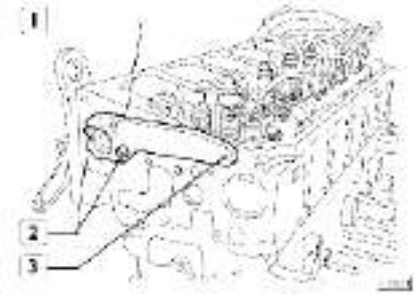

Rotate the timing tool 99395223 (1), to insert the fixing pin (3) into the positioning hole (Figure 47, No.2) on the cylinder head. Tighten the timing tool 99395223 (1) with two M8x1.25 bolts (2).

Figure 49

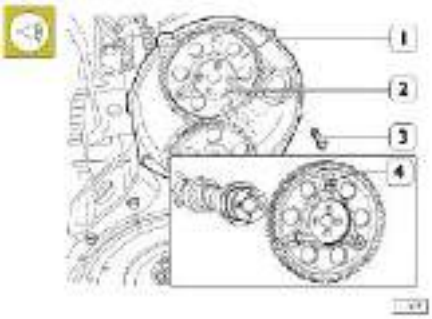

Install the camshaft timing gear (1); make sure to align the threaded hole on the camshaft to the sliding groove (2) on the timing gear.
Install the camshaft timing gear (1), fixing the spoke (4) into the appropriate position (as shown in the picture).This process is absolutely necessary to ensure the correct installation of the flywheel. With respect to the timing gear, the flywheel can only be installed in one position.
Tighten the bolt (3) to the specified torque.

Figure 50

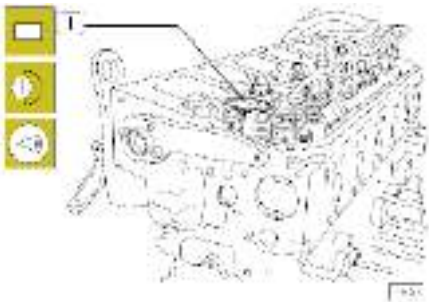

Connect the valve bridge (1) to the valve.

Note: *Before reinstalling the rocker arm shaft ASSY, check whether all the clearance adjustment screws are fully loosened.*

Figure 51

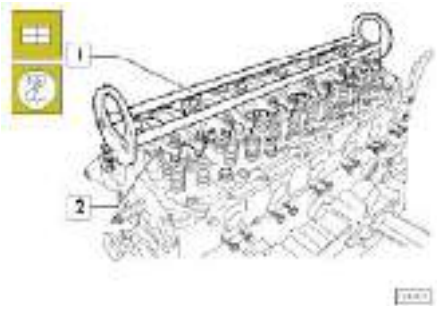

Install the rocker arm shaft (2) to the cylinder head b special tool 99360558 (1).

Tighten the bolt to the specified torque.

Fix the engine brake retaining bolts.

Figure 52

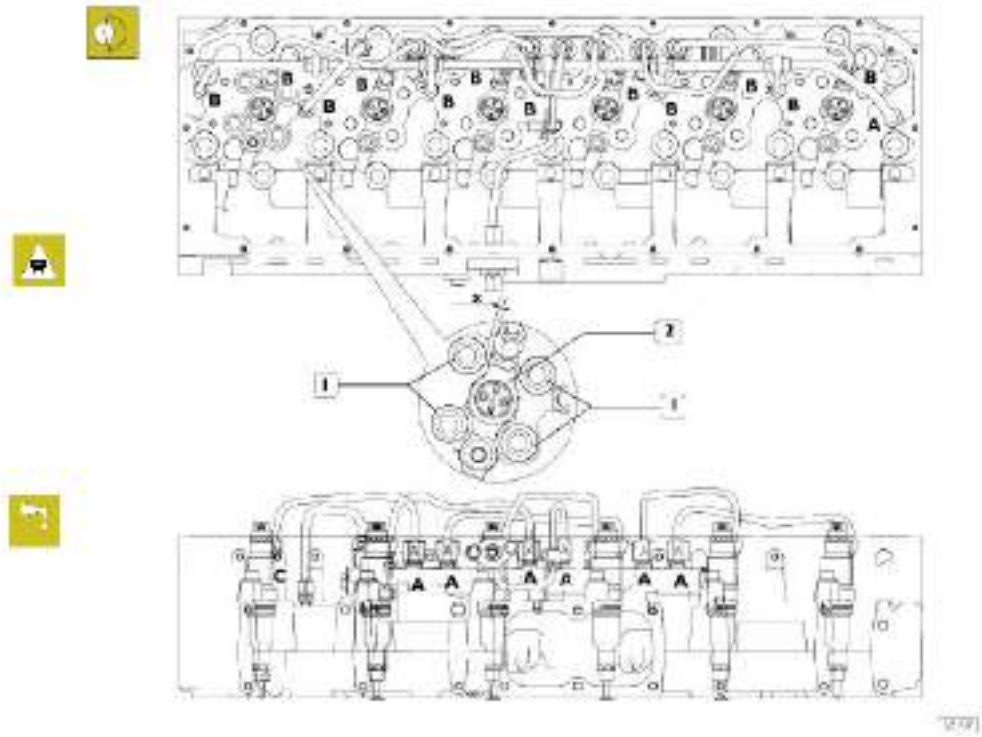

The removed high-pressure pipe is not reusable; these pipes must be replaced.

1. Connect the engine brake fluid pipe to the engine brake cylinder.
2. Tighten the bolt to the specified torque.

Lubricate the O-ring, and fix the injector with lubricant.

3. Install the common rail to the cylinder head and tighten the bolt.
4. Install the injector in the correct position and tighten the bolts to the specified torque.

Check whether the distances between the injectors (2) and valve springs (1) are equivalent. The distance X between injectors and valve springs should be equal.

5. Install the high-pressure fuel pipe to the common rail and tighten.
6. Fix the common rail onto the cylinder head with torque as needed.
7. Connect the high-pressure fuel pipe to the injector and cylinder head and tighten.
8. Retain the unions to the common rail (A,C) with torque as needed.
9. Retain the union to the injector and cylinder head (B, C) with torques as needed.

Position	description	torque
A	M18 x 1.5	40 ± 2 Nm
B	M14 x 1.5	35 ± 2 Nm
C	M16 x 1.5	40 ± 2 Nm

After the high-pressure pipeline is installed, please keep checking the oil level in the first 20 hours (the oil level can't rise).

Flywheel timing

Figure 53

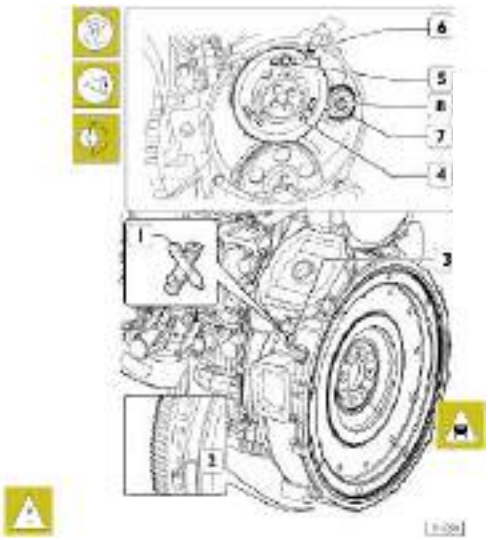

Replace the plate washer (PN 17095914) matching to the lock nut (8) of the high-pressure fuel pump gear.

Install the high-pressure fuel pump gear (7) and tighten the bolt (8) to the specified torque.
Install the timing signal disc (4), aligning the tooth marked with arrow (→) and the sensor hole (6).
Insert the timing lock pin 99360613 inside the sensor hole (6) to check if the position of the timing signal disc (4) is correct or not.
Tighten the screws (5).

Special tools needed: 99395223, 99360612 and 99360613.

Figure 54

Note: *The removed high-pressure fuel pipe is not reusable.*

Connect the fuel pipe (1) of the high-pressure fuel pump to the cylinder head.
Tighten the nuts to the specified torque.
After the high-pressure pipeline is installed, please keep checking the oil level in the first 20 hours (the oil level can't rise).

Figure 55

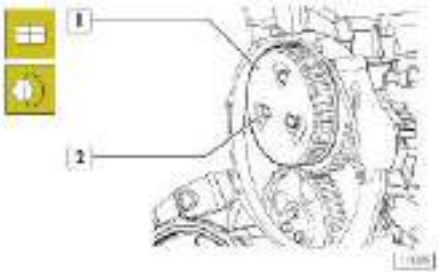

Fix the centrifugal filter element (1) onto the timing signal disc; tighten the screw (2) to the specified torque.

Figure 56

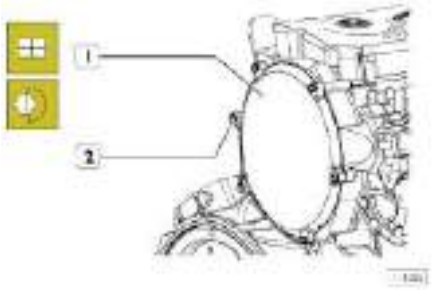

Assemble the gear chamber cover (1) and tighten the screw (2) to the specified torque.

Valve clearance adjustment

Figure 57

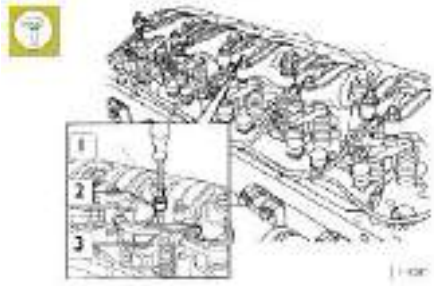

The valve clearance adjustment process must be carried out with care. Adjust only valves of the cylinders in their power stroke.

The intake/exhaust valves are all closed for the cylinders in their power stroke, thus the valve clearance can be adjusted; the symmetrical cylinder is on intake stroke, the intake valve opens, the valve clearance can't be adjusted. The symmetrical cylinders are 1-6, 2-5, 3-4.

To carry out the above-mentioned operations correctly, please refer to the following procedures and table contents:

- Loosen the lock nut (1) of the adjustment screw (2).
- Insert a feeler gauge (3); the intake valve clearance is 0.35-0.45mm and the exhaust valve is 0.55-0.65mm.
- Check whether the friction of the feeler gauge (3) is small when it's sliding.
- Lock the nut (1) and fix the adjustment screw.

Firing order **1-4-2-6-3-5**

Top dead center position	Cylinder on intake stroke (non-adjustable)	Cylinder on power stroke (adjustable)
The 1st and 6th	6	1
The 3st and 4th	3	4
The 2st and 5th	5	2
The 1st and 6th	1	6
The 3st and 4th	4	3
The 2st and 5th	2	5

Note: *For the correct handling of the above-mentioned adjustment operations, please always operate by orders given in the table and check whether the position is right by the flywheel lock pin 99360612 in each process.*

Figure 58

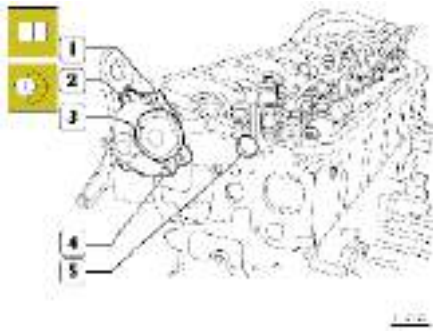

Fix the camshaft front cover (1) with seal gasket and sealant applied; tighten the screw (2) to the specified torque.

Correctly assemble the camshaft front cover, aligning it to the camshaft to avoid damage to the seal gasket.

Fix the blow-by valve (3) and tighten the screw (4) to the specified torque.

Figure 59

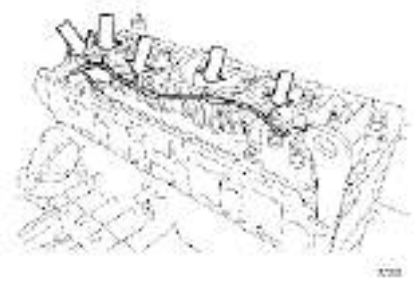

Install internal harnesses of the cylinder head (injector + pressure sensor) as shown in the picture (↓) ⇩, and fix the harness

Figure 60

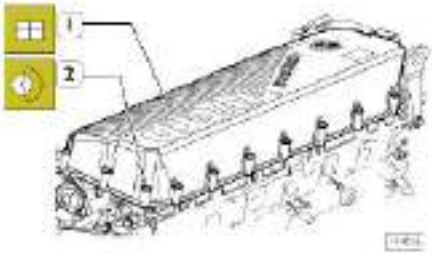

Assemble the cylinder head cover (1), tighten the bolts (2) to the specified torque in the order given in Figure 61.

Figure 61

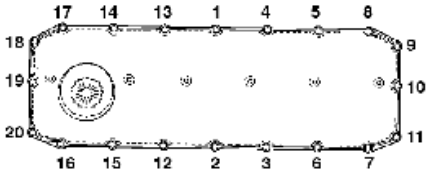

Figure 62

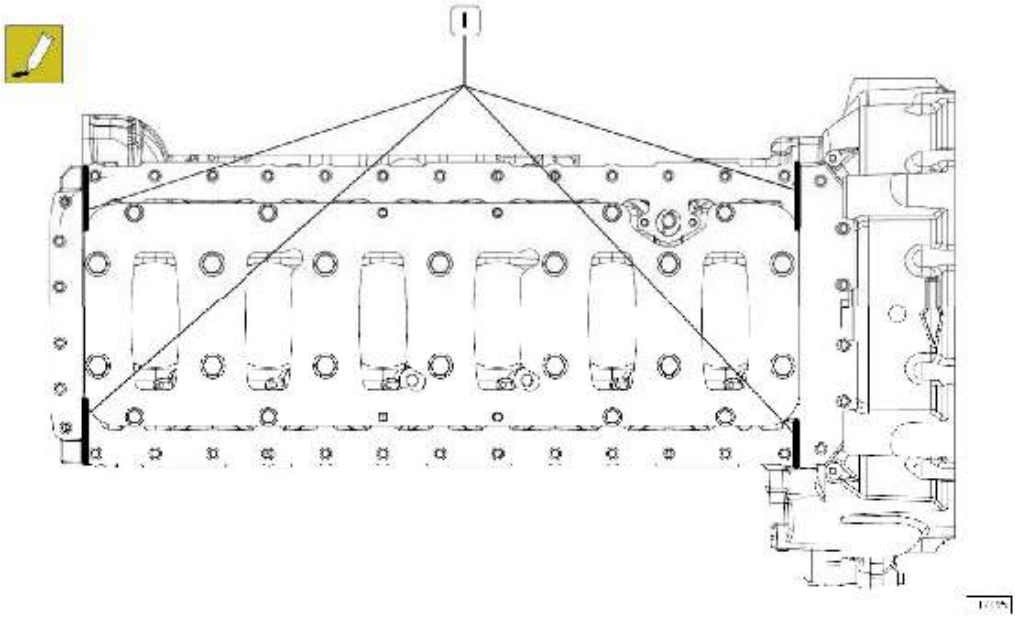

Before assembling the oil filter, it's important to seal the areas of the cylinder block that contact the gear chamber and front cover (1) by LOCTITE sealant according to the following instructions.

- ❑ Clean the surface for contaminants and residue.
- ❑ As shown in the picture, apply LOCTITE 275 sealant, the diameter of the sealant must be 1.5±0.5mm.

Figure 63

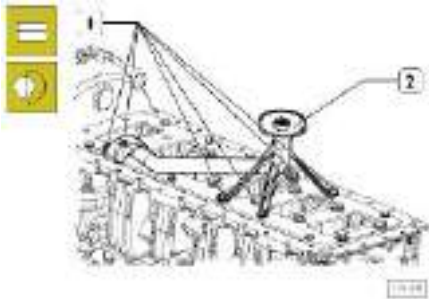

Install the oil strainer (2) and tighten the bolt (1) to the specified torque.

Figure 64

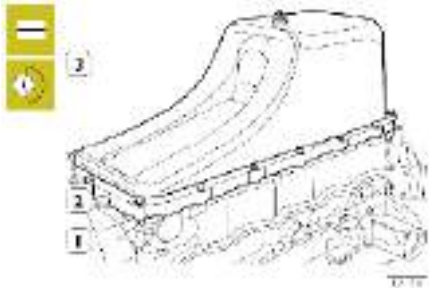

Apply sealer to the oil pan (1) and assemble the oil pan retainer (3).
Install the oil pan to the engine cylinder block and tighten the bolt (2) to the specified torque.

Figure 65

Install the following components:

- ❑ Alternator (6);
- ❑ Belt tensioner (5)
- ❑ Air-con compressor (1);
- ❑ Water inlet pipe (3);
- ❑ Belt tensioner (4)
- ❑ Thermostat ASSY (2).

Figure 66

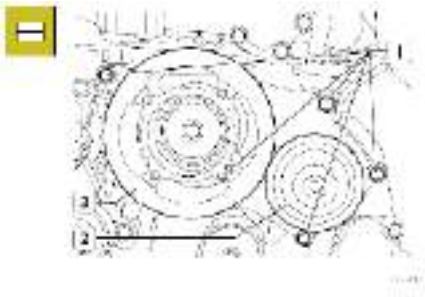

Install the water pump (2), pulley (3) and tighten the screw (1).

Figure 67

Install the pulley (2) and shock absorber (3).
Use special tool (4) and move it in the direction of the arrow, to install the water pump and alternator belt (5).
Install the air-con and fan belt (1) to the pulley for fan and air-con compressor.

Note: *During the process, please operate with the belt slack to avoid undesirable effects caused by twisting stretching.*

Note: *The air-con and fan belt must be replaced after each removal.*

Finishing the engine assembly

Finish the engine ASSY assembly or the following connecting components:

- Fuel filter mounting and fuel pipe
- ECU
- Intake manifold;
- Oil cooler
- Exhaust manifold;
- Turbocharger and water pipe, oil pipe
- Thermostat ASSY
- Oil dip stick;
- Starter
- Oil filter
- Engine harness connection.

Note: *The oil pipeline, cooling water pipeline and turbocharging lubricant union must be tightened to the following torque:*

- *35± 3.5 Nm, water pipeline union*
- *55± 5 Nm, oil pipeline female coupling*
- *20-25 Nm, oil pipe male coupling.*

Engine components

Figure 1

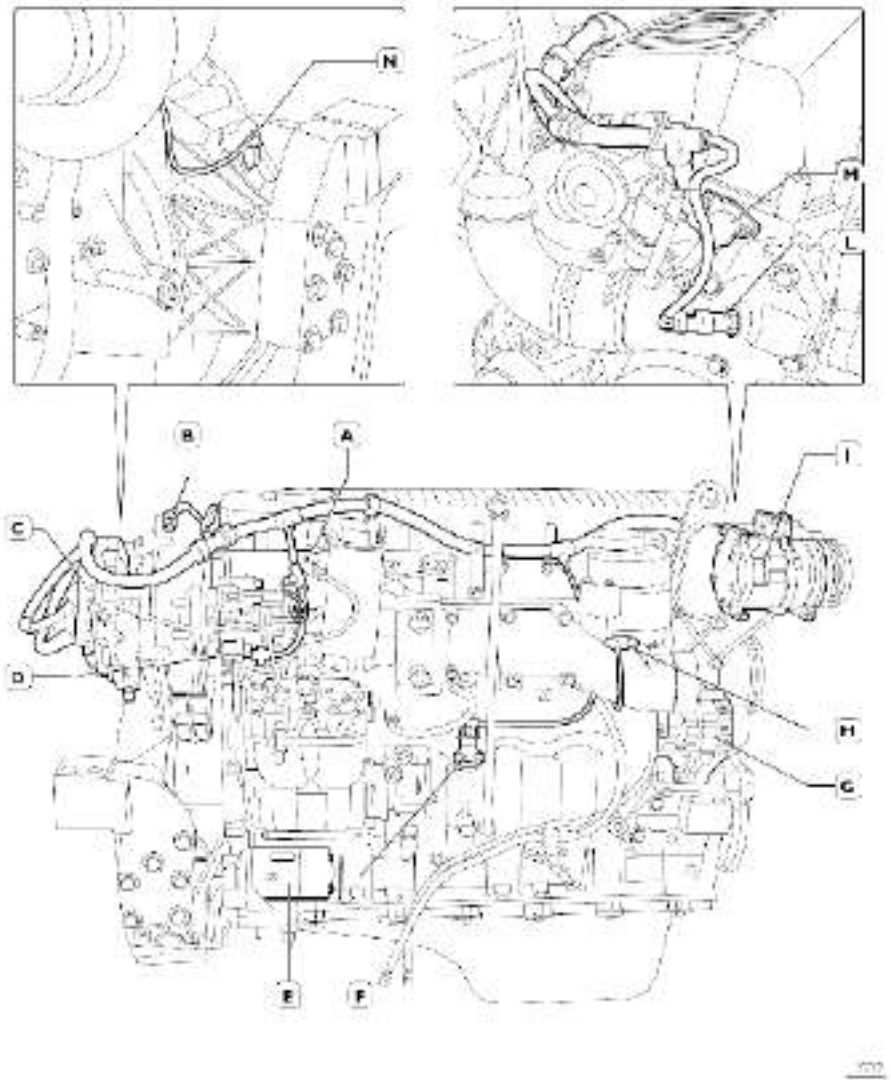

A. Fuel temperature sensor B camshaft sensor C. ECU D. fuel pressure regulator E. Starter
F. oil pressure/temperature sensor G. alternator H. intake air temperature/pressure sensor I. air-con compressor
L. water temperature sensor M. cylinder head harness adapter N. crankshaft sensor

High-pressure fuel pump (regulator)

The high-pressure fuel pump is equipped with 3 radial plugs controlled by the camshaft timing gear and a feed pump is equipped in the back.

A. Fuel return coupling (to the fuel return pipe)

B. Fuel intake coupling (from ECU seat)

C. Fuel intake coupling (from fuel filter)

D. Fuel outlet coupling (to fuel filter)

E. Fuel outlet coupling (to common rail)

1. High-pressure pump

2. Feed pump

3. Regulator (normally open solenoid valve, controlled by the ECU according to the PWM signal)

Regulator

The regulator is located at the high-pressure pump intake port of the low-pressure system. It controls the fuel volume delivered to the high-pressure pump according to the command sent by the ECU.

The regulator is mainly comprised of:

- Trapezoidal lock pi;
- Valve control pin
- Pre-load valve;
- Coil

If no control signal is given, the regulator is normally open. At this time, the high-pressure fuel pump is under the maximum fuel supply condition. The ECU determines whether to increase or decrease the fuel volume delivered to the high-pressure fuel pump according to the PWM signal. This component cannot be replaced as a single part, thus it can't be removed.

The high-pressure fuel supply volume is controlled by the regulator located in the low-pressure system. The supply pressure to the common rail is between 250-1400 bars and is achieved by the ECU control to the regulator.

The regulator is a normally an open solenoid valve; the resistance is ～ 3.2 Ω, connected to the ECU pin C5-C7.

Figure 14

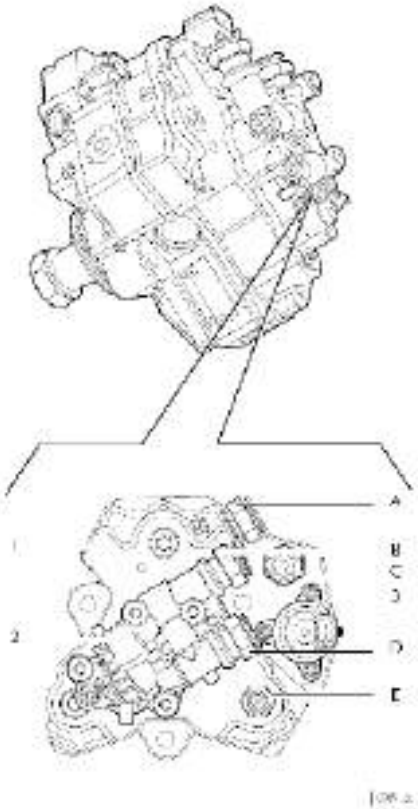

Troubleshooting

Preface

The maintenance service should be carried out by experienced qualified technical mechanic.

If there are complaints that the engine operates abnormally, record the malfunction symptoms the customer provides to obtain useful information to solve the problem.

When the engine malfunctions, it's recommended to carry out the maintenance operation after reading the fault data provided by the ECU.

During the service process, carry out continuous efficiency tests on the relevant component and inspect the working condition of the whole system; this may provide important diagnosis information. In addition, the diagnosis information can be obtained by reading the malfunction flashing code (if programmed) given by the malfunction indicator lamp.

Note: The diagnosis analysis obtained from the flashing code may not be able to solve all the existing abnormal problems.

A two-way connection can be established with the ECU by using an SIH diagnosis instrument. The diagnosis instrument can not only read the malfunction code, but can also search the recorded relevant information in the ECU, thus correctly determining possible causes for the malfunction.

Every time a fault shows up, search the relevant recorded information of the ECU, analyzing, judging and testing it to find out the cause for the fault.

If no information is provided by the ECU, carry out the troubleshooting process by conventional diagnosis procedures according to previous experience. Any operations on the ECU, can only be done by qualified personnel authorized by SIH.

Any unauthorized maintenance service may render the aftersale warranty invalid.

Troubleshooting

Symptom	Possible cause	Possible relevant abnormity	Possible Solution	Remarks
The engine stopped or can't start	Blocked fuel strainer			
The engine stops after running for a short period after the vehicle is newly put into use large volumes of fuel are stored in the reservoir, the others are all running normally	The suction pipe and the return pipe are reversed.			In this situation the engine intakes the fuel through the return pipe, while the position of the return pipe is higher. When the return pipe can't continue with fuel intake, the engine will stop.
Reduced power output/the engine runs with difficulty.	The injection system/one of the engine cylinders is malfunctioning: the injector seized.	Overheating	Engine test: Cylinder efficiency test.	
Fuel consumption increased	Air filter blocked, with no signals from the warning lamp on the instrument panel.	Smoking problem	Check the circuits, connections and components.	
The engine can't accelerate when loaded.	The value provided by the charging sensor is too high	Smoking problem		
The driver feels that the engine doesn't run normally as before.	Injection pressure control malfunction of the injector.		Engine test: Thorough inspection.	
The engine stopped or can't restart	There is air in the fuel supply pipeline	The engine cannot be switched off, may vibrate when running, or starts with difficulty after several attempts.	Bleed the system.	

Maintenance schedule

Maintenance

Maintenance service schedule sheet

The maintenance service process is mainly made up of standard services, particular services and temporary services.

Systematically use the recommended lubricant, which can prolong the replacement period at relatively stable costs. To achieve this purpose, please refer to the relative description of the recommended lubricants.

To guarantee the best working condition of the engine or vehicle, we offer periodic tables for inspection, maintenance and adjustment to the vehicle/engine components.

The oil mileage changing frequency is related to the sulphur content of the used diesel. The content should be less than 0.5%.

Note: *If the sulphur content is higher than 0.5%, the oil changing frequency should be halved.*

Engine oil to be used:	ACEA	E4	10W40
	API	CI-4	15W40

If the vehicle is seldom used or the annual driving time/mileage is smaller than 1000 hours/100,000 km, the oil and oil filter should still be changed once every 12 months.

According to the changing period requirement of the ACEA E4 lubricant, it can't refer to the changing period of the ACEA E6 lubricant, but can be serviced with reference to ACEA E2, e.g. once every 400 hours/40,000km.

Maintenance service

Maintenance procedure

Inspection and replacement

Check the engine oil level

This inspection must be carried out with engine switched off under normal temperature.

Pull out the oil dip stick and check if the oil level is between the maximum and minimum marks. Wipe the dipstick with a clean cloth and check the oil level again.

If the oil level is at or near the Minimum mark, it's necessary to fill up the engine oil.

Top up the engine oil through the oil filler plug on the cylinder head cover or the gear chamber side. When topping up, remove the oil filter cap and dipstick to ensure a smooth flow of the oil.

The engine oil is a pollutant and is harmful to personal health.
Should contact occur, wash the affected skin with water and cleanser.
Appropriate measures should be employed to protect the skin and eyes; carry out operations fully in accordance with the safety specifications.
Moreover, the disposal process for the waste must be carried out according to the current laws and regulations.

Check the fuel system

This inspection should be carried out whenever the engine is switched off or running. Check the fuel passage from fuel tank to high-pressure fuel pump and then to the injector with care.

Check the cooling system.

This inspection should be carried out whenever the engine is switched off or running.
Recheck the pipeline between the engine and radiator for leakage, particularly positions with interference.
Check and verify that the radiator is clean, the fan clutch is working normally and no leakage exists in the relative components, pipelines and cooling device.

When the system reaches high temperature, the check can't be carried out immediately after the engine stops; wait until it cools down.

Appropriate measures should be taken to protect the skin and eyes to prevent coolant splashing onto the skin and eyes.

The coolant density should be checked annually at the start of each winter; the coolant must be changed every two years.

Note: *When refilling the coolant, bleed the air with the bleeding system of the engine. Otherwise, partial high temperature may occur in the engine and may damage the engine.*

Check the lubrication system

This inspection should be carried out whenever the engine is switched off or running. Check the oil-gas separating system, oil pan and/or oil radiator for leakage or seepage.

The engine oil is a pollutant and is harmful to personal health.
Should contact occur, wash the affected skin with water and cleanser.
Appropriate measures should be employed to protect the skin and eyes; carry out operations fully in accordance with the safety specification.

Moreover, the disposal process for the waste must be carried out according to the current laws and regulations.

Check for water in the fuel filter

If there is water or any foreign matter in the fuel, the related components of the fuel system will be worn out quickly. Appropriate measures should be taken promptly to drain the water from the fuel passage.

The fuel strainer has a drain valve; it is used to drain the water separated from the fuel. Place a container under the strainer and loosen the drain valve gently to drain out the water in the bottom of the strainer. Once fuel flows out, close the drain valve immediately (maximum tightening torque is 0.5 Nm).

Change engine oil

Figure 30

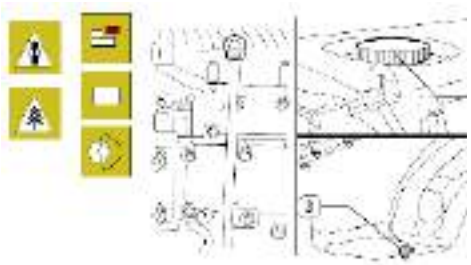

We recommend you to change the engine oil when the engine is hot.
Warning: The temperature is very high when the engine is running; we suggest you to wear suitable protective clothing.

The engine oil temperature is high: Protective gloves must be worn.

- ❑ Put the container under the drain plug (3) of the oil pan.
- ❑ Unscrew the drain plug (3), remove the dipstick (1) and filler cap (2) to enable the smooth flow of the oil.

The engine oil is a pollutant and is harmful to personal health.

Should contact occur, wash the affected skin with water and cleanser.
Appropriate measures should be employed to protect the skin and eyes; carry out operations fully in accordance with the safety specification.

Moreover, the disposal process for the waste must be carried out according to the current laws and regulations.
Tighten the drain plug (3) of the oil pan to the specified torque. Top off the engine oil of the specified quality to the required quantity through the filler cap (2) on the cylinder head cover.

Note: *To guarantee the normal operation of the engine, use only the recommended oil or oil with the required characteristics.*
When topping off, don't mix the oil of different characters.
Failure to follow these provisions may render the warranty service invalid.

- ❑ Check the oil level using the dipstick until the oil level reaches the maximum mark on the dipstick.

Change the engine oil filter

Figure 31

Drain the oil in accordance to the instructions in the section Change the Engine Oil.
Remove the oil filter (1).

Warning: The oil filter can contain 1KG of oil at most.
Proper disposal should be taken for the container with waste oil.

Warning: Avoid skin contact with the engine oil; should contact occur, wash the affected skin with water.
The engine oil is a pollutant: the waste oil should be disposed of according to the relevant regulations.

Note: *Before installing the new filter element, soak the sealer in the oil.*

Tighten the oil filter (1) manually and then tighten to the specified torque with a special tool, top off engine oil according to the instructions in the section Change the Engine Oil.

Change the fuel prefilter

Figure 32

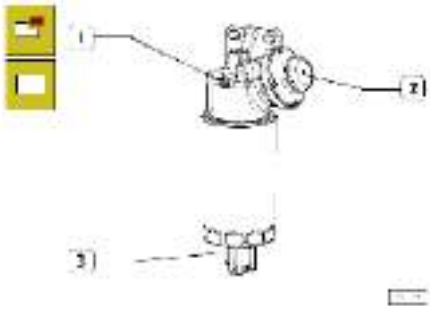

Perform only when the engine is switched off.

- ❑ Remove the water sensor (3) from the prefilter.
- ❑ Loosen and take off the prefilter element.
- ❑ Check and verify that the new prefilter element meets the operating requirements of the engine (in comparison with the old prefilter element).
- ❑ Soak the sealer of the prefilter element with diesel or engine oil.
- ❑ Manually tighten the new prefilter element and turn further 3/4 of a circle to secure tightening.
- ❑ Install the water sensor to the prefilter element and make sure of the correct wiring. Loosen the bleeding screw (1) on the prefilter mounting, start the mechanical pump (2) until the air is bled. Make sure the bled fuel is not emitted into the surroundings.
- ❑ Lock up the bleeding screw.
- ❑ Start the engine and run idle for several minutes to bleed out the residual air.

Note: *To speed up the bleeding process, use the mechanical pump when starting.*

Change the fuel filter

Figure 33

- ❑ Remove the fuel filter (1).
- ❑ Before installing the new filter element, soak the sealer in the fuel or oil.
- ❑ Tighten the new filter element manually with care and check whether the rubber sealing ring and the contacting surface are clean and sound.
- ❑ Manually tighten the new filter element and turn another ¾ of a circle to secure tightening.
- ❑ Bleed the air from the supply system

Change the oil-gas separating system

Figure 34

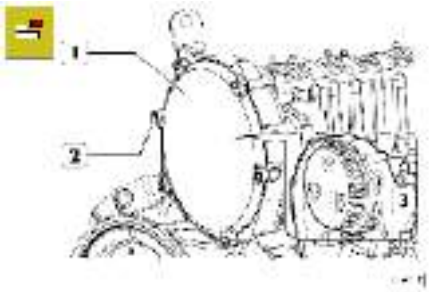

Loosen the screw (2), and remove the gear chamber (2). Remove the centrifugal filter element (3) and change.

Figure 35

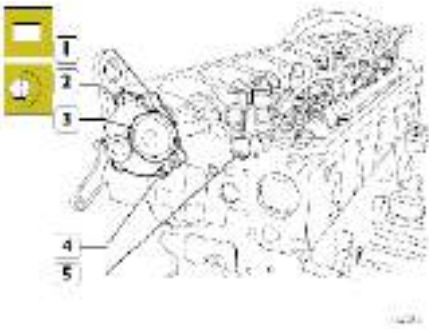

Install the camshaft rear cover (1) and sealer; tighten the bolt (2) to the specified torque.

When installing the camshaft rear cover, it should be aligned to the camshaft to avoid damaging the washer.

Fix the blow-by valve (3) and tighten the screw (4) to the specified torque.

Check the working condition of the water pump/alternator belt.

Figure 36

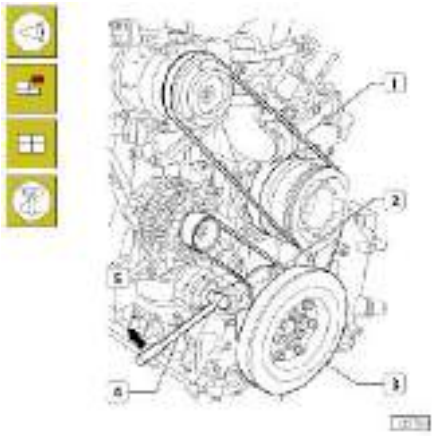

Visually inspect the belt (1-5), make sure it's not worn or damaged. If it is, change it according to the relevant instructions in the 3rd section part 1.

Note: *The belt tensioner is of the automatic type, adjustment free.*

Check and adjust the valve clearance

When processing, strictly observe relevant instructions in Section 3 Part 1.

Overhaul and specifications

General characteristics

	Model No.	F2C
	Circulation	4 stroke Diesel engine
	Fuel supply	Turbocharging
	Injection	Direct injection
	Cylinder number	6 In-line type
	Bore mm	117
	Stroke mm	135
	Cubic capacity cm^3	8710

Model No.		**F2C**
Valve timing		
Before the top dead center (TDC) the intake valve opens	A	17°
After the bottom dead center (BDC) the intake valve closes	B	31°
Before bottom dead center (BDC) the exhaust valve opens	D	48°
After the top dead center (TDC) the exhaust valve close	C	9°
For timing inspection		
× mm		-
× mm		-
Valve clearance checking		
× mm		0.35 to 0. 45
× mm		0.55 to 0. 65
Fuel supply system		Bosch common rail, CRIN3 injector, CP3.3 high pressure pump
Nozzle type		DLLA 145
Injection order		1 – 4 – 2 – 6 – 3 – 5
Injection pressure	bar	1200
Injection calibration	bar	

Installation clearance data

	Model No.		**F2C**
Cylinder block and crankshaft components			mm
	Inner diameter of the cylinder liner bottom hole		
	Ø1	High configuration	130.500~130.525
		Low configuration	129.510~129.535
	Cylinder liner:		
	outer diameter:		
	Ø 2	High configuration	130.461~130.486
		Low configuration	129.475~129.500
	Length	L	226.15
	Cylinder liner outer diameter Ø1-		
	Bottom hole inner diameter Ø2 clearance		
	High configuration		0.014~0.064
	Low configuration		0.010~0.060
	outer diameter:	Ø2	-
	Cylinder liner:		
	Inner diameter	Ø3A*	117,000~117.012
	Inner diameter	Ø3B*	117.010~117.022
	Protrusion (with load of 6,000 KG) X		0.035~0.065
	Piston-cylinder liner clearance		
		A*	0.094~0.118
		B*	0.094~0.118
	Piston diameter	Ø1	-
	Piston pin	Ø3	51.994~52,000
	Piston pin - pin bore		0.010~0.022

(*) indicates level selectable.

	Model No.		F2C
			mm
	Piston ring slot	X1	3.120~3.140
		X2	2.550~2.570
		X3	4.020~4.040
	Piston ring:		
	The first compression ring	S1	3.000
	The second compression ring	S2	2.470~2.500
	Oil ring	S3	3.970~3.990
	Piston ring slot	1	-
	(X and S)	2	0.050~0.100
		3	0.030~0.070
	Piston ring		-
	Piston ring gap clearance		
		X1	0.3~0.4
		X2	0.60~0.75
		X3	0.35~0.65
	Small end bushing hole	Ø1	55.700~55.730
	Big end engine bearing hole	Ø2	85.987~86.013
	Selection level	1	85.987~85.996
		2	85.997~86.005
		3	86.006~86.013
	Small end bushing hole diameter		
	Outer diameter	Ø4	55.780~55.820
	Inner diameter	Ø3	52.015~52.030
	Big end engine bearing thickness S		
	Red		1.994~2.002
	Green		2.002~2.010
	Yellow*		2.010~2.018
	Small end bushing – bottom hole clearance		0.05~0.08
	Piston pin – bushing clearance		0.015~0.036
	Big end bearing upset dimension		0.127-0.254-0.508
	Weight of con rod		
		A	g
	Level	A	3450~3470
		B	3471~3490
		C	3491~3510

(*) mounted in finished products only, not supplied as spare parts.

Model No.		F2C
		mm
Measuring dimension	X	125
The up and down axis line of the con rod offset		0.08
	=	
Crank journal	Ø1	
-Nominal		92.970~93,000
-Level	1	92.970~92.980
-Level	2	92.980~92.990
-Level	3	92.990~93,000
Crank pin	Ø2	
-Nominal		81.915~81.945
-Level	1	81.915~81.925
-Level	2	81.925~81.935
-Level	3	81.935~81.945
Main bearing	S1	
Red		2.968~2.978
Green		2.978~2.988
Yellow*		2.988~2.998
Con rod bearing	S2	
Red		1.994~2.002
Green		2.002~2.010
Yellow*		2.010~2.018
Main bearing cap	Ø3	
-Nominal		99,000~99.030
-Level	1	99,000~99.009
-Level	2	99.010~99.019
-Level	3	99.020~99.030
Main bearing cap – crank journal		0.050~0.090
Crank pin – con rod big end		0.040~0.080
main bearing upset dimension		0.127(*)-2.254-0.508
Con rod bearing upset dimension		0.127(*)-2.254-0.508
Crank journal, thrust bearing	X1	39.96~40.04
Main bearing cap, thrust bearing	X2	38.94~38.99
thrust bearing	X3	3.38~3.43
Crankshaft float clearance		0.10~0.30
Parallelism		-
Cylindricality		0.04
Taper		-

(*) mounted in finished products only, not supplied as spare parts.

Model No.		F2C
Cylinder head –valve train		mm
Valve guide bottom hole	Ø1	12.9800~12.997
Valve guide inner diameter	Ø2	8.023~8.038
outer diameter	Ø3	13.012~13.025
Valve guide outer diameter - bottom hole		0.015~0.045
Valve guide oversize		0.2-0.4
Valve:		
	Ø4	7.970~7.985
	α	60°30' ± 7'30"
	Ø4	7.970~7.985
	α	$45^{+15'}_{-0'}$
Valve – valve guide		
Valve seat bottom hole		
	Ø1	41.985~42.020
	Ø1	40.985~41.020
Valve seat outer diameter; distribution angle		
	Ø2	42.060~42.075
	α	$60°\text{-}30'0^{+0'}_{-0.5'}$
	Ø2	41.060~41.075
	α	$45\text{-}30^{+0'}_{-0.5'}$
		0.5~0.8
Valve groove		
		1.6~1.9
Valve stem – cylinder head		0.040~0.090

	Model No.		F2C	
			mm	
	Valve spring height:			
	No-load height:	H	70.77	71.34
	Load height:			
	N 460 ± 23 H1A N 460 ± 22 H1B		51	
	N 740 + 33 H2A N 731,1 ± 12 H2B		39	
	Camshaft bearing hole diameter: 1→7	Ø	69.00~69.030	
	Camshaft journal: 1→7	Ø	64.924~64.080	
	Camshaft bearing outer diameter:	Ø	69.090~69.130	
	Camshaft bearing inner diameter:	Ø	65.080~65.116	
	Camshaft bearing and hole		0.060~0.130	
	Camshaft bearing and journal		0.100~0.192	
	Cam lift:			
H			7.4034 8.2108	
	Rocker arm shaft diameter	Ø1	31.964~31.980	

Model No.	F2CE0681D	F2CE0681C	F2CE0681B	F2CE0681A
		mm		
Rocker arm bushing bottom hole				
		32.025~32.041		
		32.025~32.041		
Rocker arm bushing and bottom hole				
		0.045~0.077		
		0.045~0.077		
Engine brake control lever				
Eccentric bushing outer diameter Ø1		32.02~32.04		
Rocker arms shaft seat Ø2		43.98~44.00		
		0.04~0.076		

TURBOCHARGER			
Model No.	HX40	HX52W	HE43IV
End float	0.025~0.127	0.025~0.127	0.025~0.127
Radial clearance	0.330~0.508	0.406~0.610	0.254~0.356

Engine overhaul

Disassemble the engine on stand

The following description is based on: The engine is put on the stand and all the special accessories are removed. (Refer to Section 3 of the Manual.)

All the important engine overhaul procedures will be introduced by illustration in this section.

Figure 1

Rotate the cylinder block (1) to the vertical position.

Figure 2

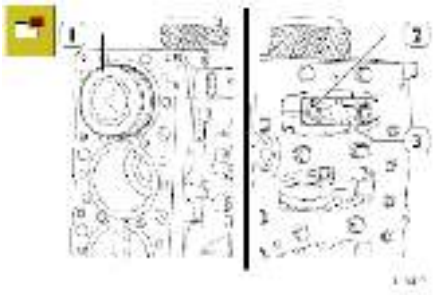

Loosen the con rod cover (3) bolt (2) and remove the con rod cover.

Remove the com rod-piston (1) ASSY from the engine top end.

Repeat the above operation until the six con rod-piston (1) ASSY are all removed.

Put the con rod big end bearing together with the con rod cover and/or record their mounting position.

During reinstallation, they should be installed to the original position.

Figure 3

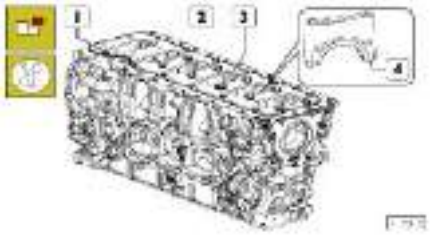

Loosen the screws (1 and 3), remove the reinforcement plate (2) and main bearing cap (4).

Note: *Record the mounting position of the main bearing cap; during reinstallation, it should be reinstalled to the original position.*

Figure 4

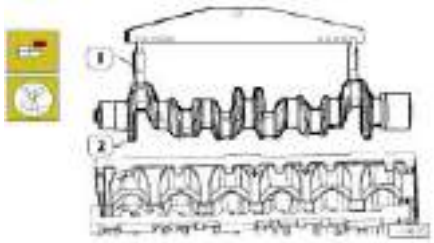

Using hook 99360500 (1), remove the crankshaft (2).

Figure 5

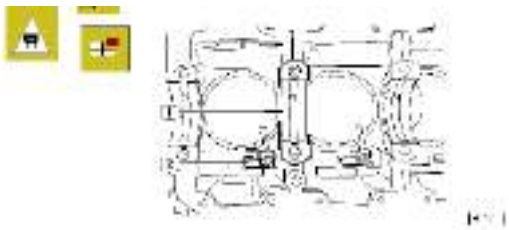

Remove the main bearing (1) and take out the nozzle (2). Remove the cylinder liner according to the relative content of this section.

After disassembling the engine, thoroughly clean the removed parts and check their wholeness. Inspection and measurement methods will be introduced hereinafter to determine the reusability of the part.

Repair service

Cylinder block

Inspection and measurements

Figure 6 (demonstration)

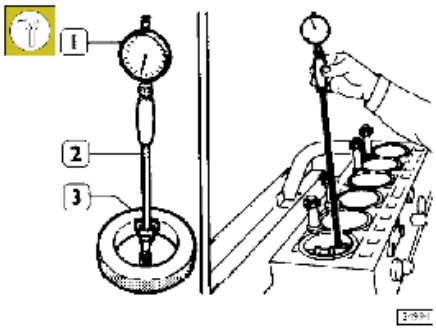

Combine the dial indicator 99395687 (2) with the end measuring rod (1) after calibrating with the 117mm ring gauge (3), then check if the cylinder liner is ovalized, tapered or worn.

Note: *If a 117mm ring gauge is not available, replace it with an outside micrometer.*

Figure 7

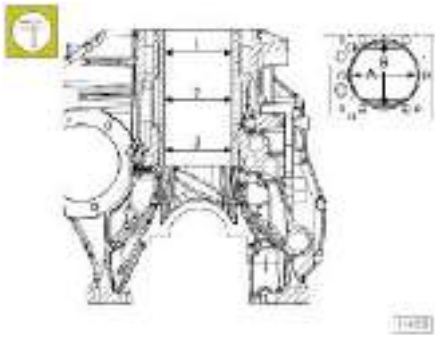

1 = 1st measurement

2 = 2nd measurement

3 = 3rd measurement

Measurement should be carried out to A, B position each time when measuring (as shown in the picture).

Figure 8 (cylinder liner inner diameter)

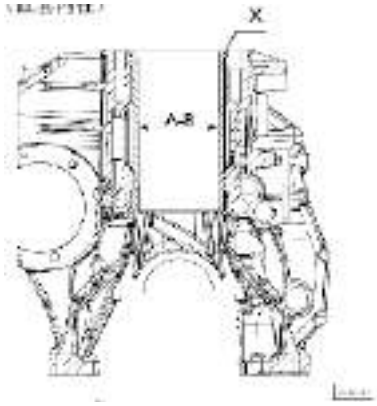

A = Selection level Ø 117 to 117.012 mm

B = Selection level Ø 117.010 to 117.022 mm

X=selection level marking area

Compared to the value shown in the picture, if the maximum wear exceeds 0.150 mm or the maximum ovalization exceeds 0.100 mm, the liner couldn't be ground or calibrated and must be changed.

Note: *The cylinder liner accessories adopt selection level A.*

Figure 9 (cylinder liner bottom home inner diameter and liner outer diameter)

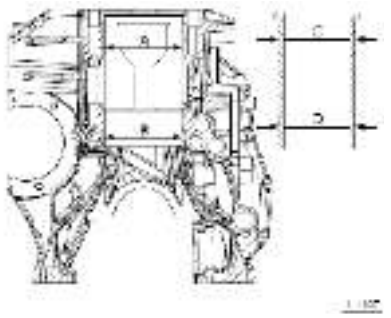

A = Ø 130.500 – 130.525 mm
B = Ø 129.510 – 129.535 mm
C = Ø 130.461 – 130.486 mm
D = Ø 129.475 – 129.500 mm
The cylinder liner bottom home inner diameter and liner outer diameter are shown in the picture.
The cylinder liner can be extracted and can be reinstalled to different cylinder bases (if necessary).

Cylinder liner:

Figure 9

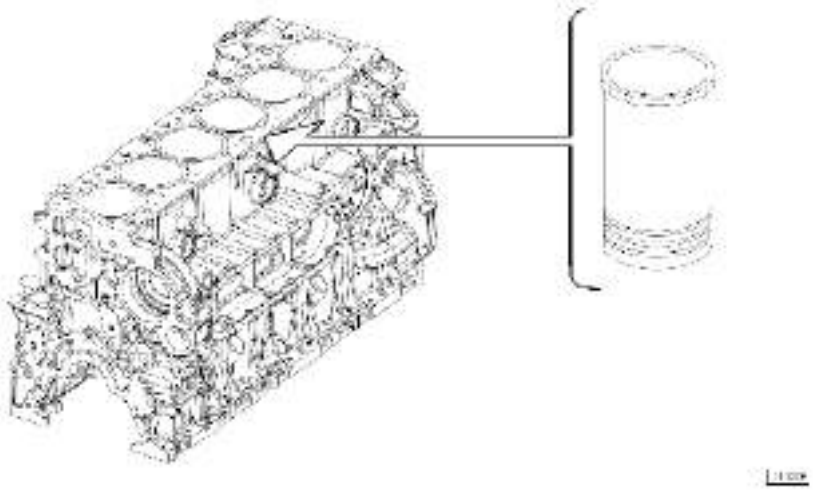

Chrome plating cylinder liner

Figure 11

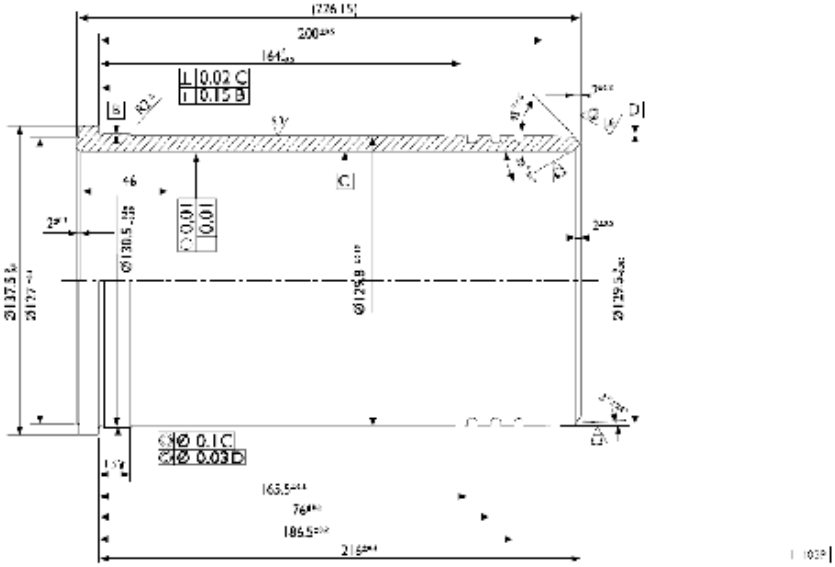

Major cylinder liner data

Selection level
- Level A (mm): 117.000 ~ 117.012
- Level B (mm): 117.010 ~ 117.022

Figure 12

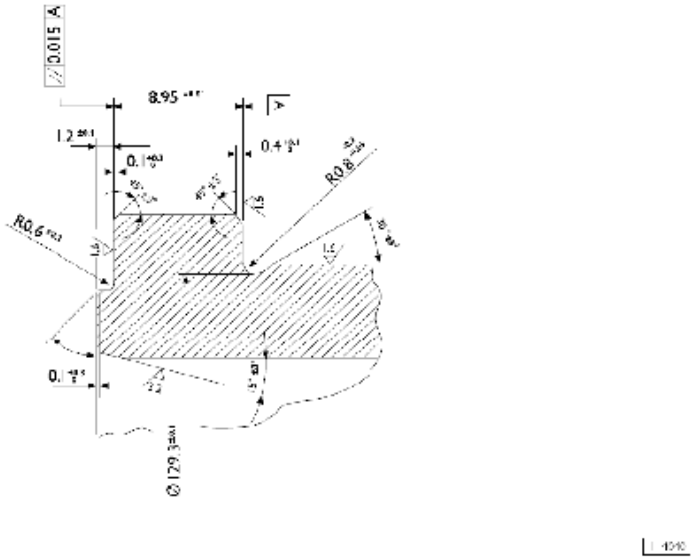

Detail drawing X A = Selection level marking area

Replace cylinder liner

Disassembling

Figure 13

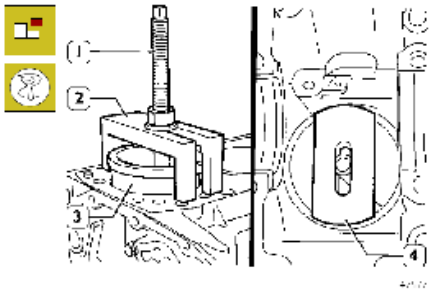

Correctly match the cylinder liner extractor 99360706 (1 and 2) and plate 99360724 (4) and install to the cylinder liner.

Tighten nut (1) and remove the liner (3) from the cylinder block.

Install and check the protrusion

Figure 14

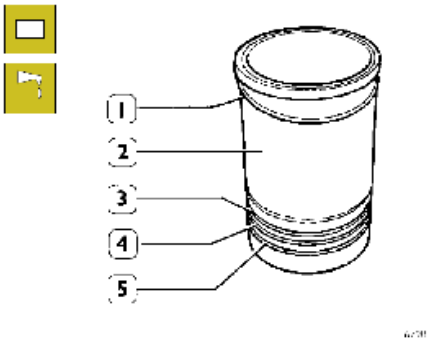

Frequently change the cylinder liner seal rings (3, 4 and 5).

Install the liner seal gasket (1) to the cylinder liner (2), lubricate the lower half of the liner and install it to the cylinder block with suitable tools.

Note: *The cylinder liner seal gasket (1) is provided as a spare part. Thickness of 0.08 mm - 0.10 mm - 0.12 mm available.*

Figure 15

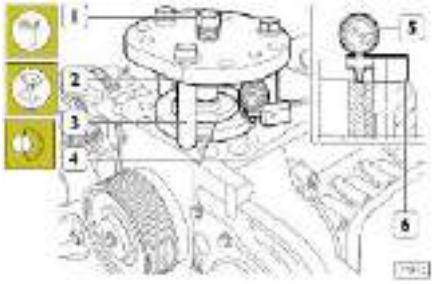

Check the cylinder liner protrusion using tool 99360334 (1-2-3-4), tighten the bolt (1) to 170 Nm. Place the dial gauge 99395603 (5) on the base 99370415 (6).

Measure the cylinder liner protrusion related to the cylinder block plane. The protrusion must be between 0.035 – 0.065 mm (Figure 16), otherwise, the seal gasket of the liner should be changed (Figure 14, No.1).

Figure 16

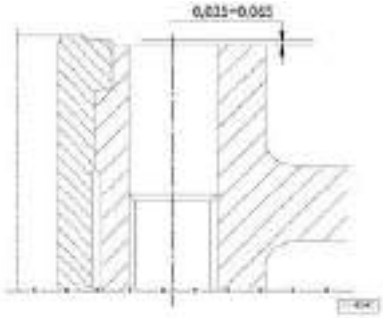

Cylinder liner protrusion

Figure 17 (illustration)

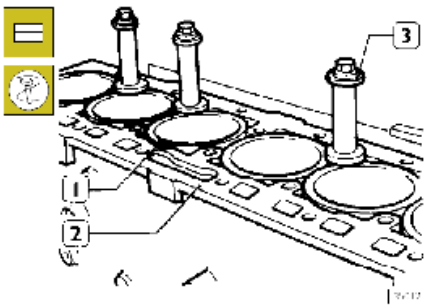

After installing, use the liner fixer 99360703 (3) to fix the cylinder liner (1) to the cylinder block (2).

Crankshaft

Figure 18

Upper half main bearing

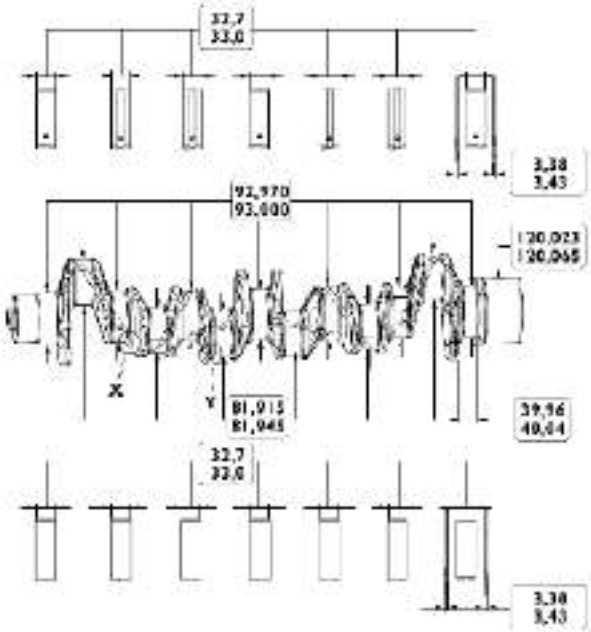

Lower half main bearing

Major crank journal and bearing data

Check the state of the crank journal and crank pin. The crank journal and crank pin should be free from scratches, ovalization or excessive wear. The given data is the normal diameter of the journal.

Figure 19

Figure 20

X. Detailed crank journal connection Diagram

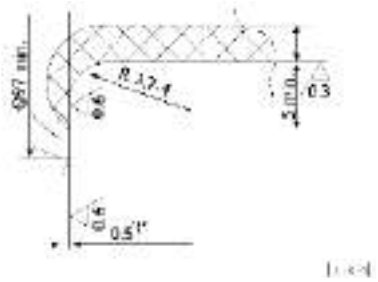

Y. Detailed crank pin connection diagram

Measure the crank journal and crank pin

Before grinding the crank pin, measure the crank journal and crank pin (2) with a micrometer (1), determine the ultimate diameter of the pin according to the undersize condition of the bearing.

Figure 21

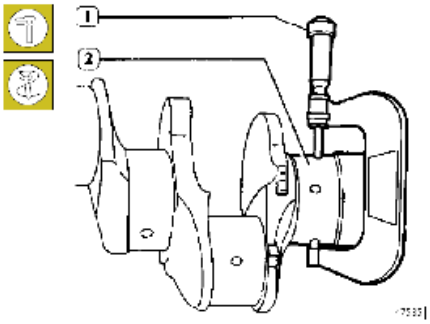

Measure the crank journal

Figure 23

Fill in this table with the measurements of the crank journal and con rod journal.

Crank journal

Note: *It's recommended to input the data given in the table (Figure 23).*

Figure 22

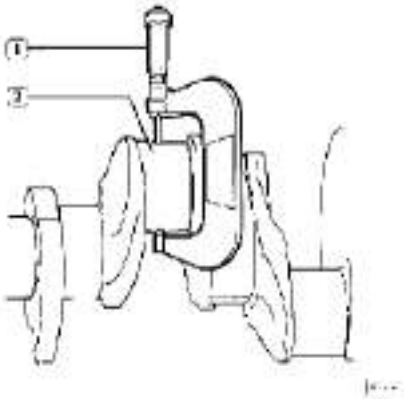

Measure the crank pin

When grinding, note the crank journal and crank pin values given in Figure 19 and 20.

Note: *All the journals and crank pins must be ground to the same undersize level to avoid destroying the shaft balance.*

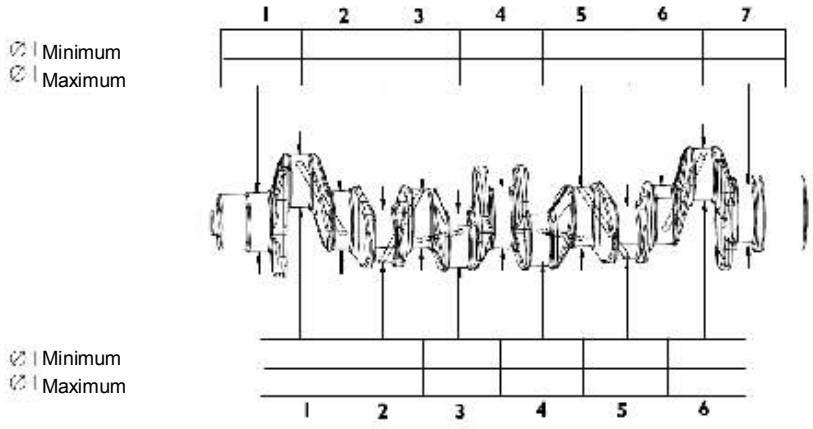

• Crank pin

Primary measurement of the main bearing and con rod bearing selection data

The following operations should be carried out on each crank journal:

Crank journal:

- ❑ Determine the diameter level of the crankshaft bottom hole.
- ❑ Determine the diameter level of the crank journal.
- ❑ Select the level of the bearing needed.

Crank pin

- ❑ Determine the diameter level of bottom hole of the con rod bearing.
- ❑ Determine the diameter level of the crank pin.
- ❑ Select the level of the bearing needed.

Specify the bearing seat diameter level in the crank box.

A group of numbers is marked outside of the 1st main bearing cap in the front of the crank box (position as shown in the picture).

- ❑ This data is made up of 7 digits, corresponding to each main bearing cap diameter level respectively.
- ❑ The number may be 1, 2 or 3.

Figure 24

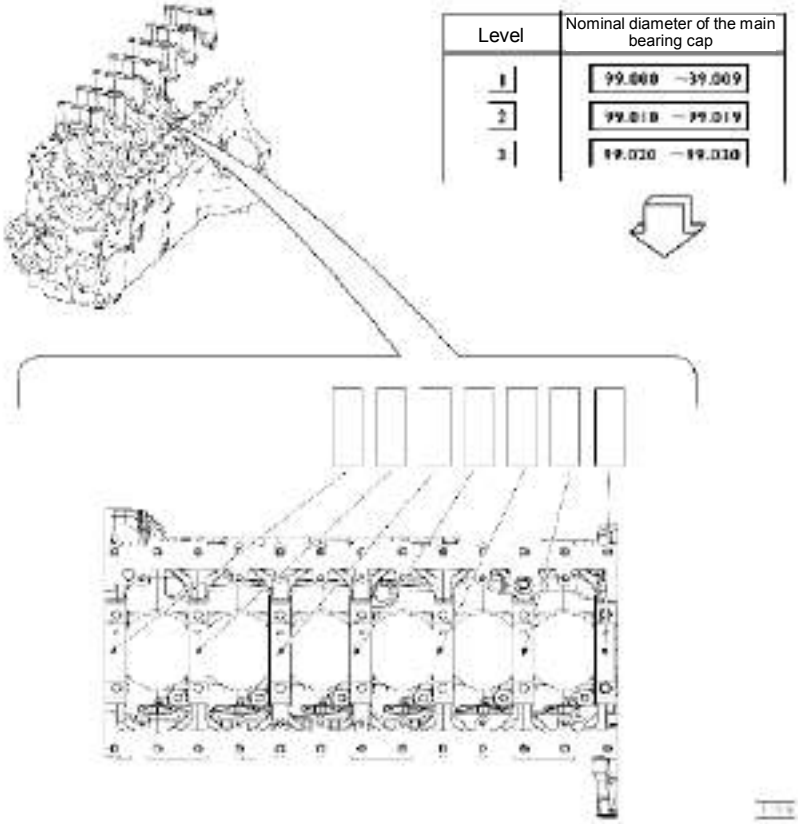

Select main bearing and con rod bearing

Note: *To obtain the required installation clearance, please always select the main bearing and con rod bearing by methods described hereinafter.*

By this operation, the main bearing and con rod bearing can be recognized (if necessary, the level of each pair of the main bearing or con rod bearing can be different).

According to the thickness, select bearings with different tolerance levels (color marks: red – green –red/black –green/black).

The table hereinafter stipulates the standard size and the permissible oversize (+0.127, +0.254 and +0.508) of the main bearing and con rod bearing.

Figure 25

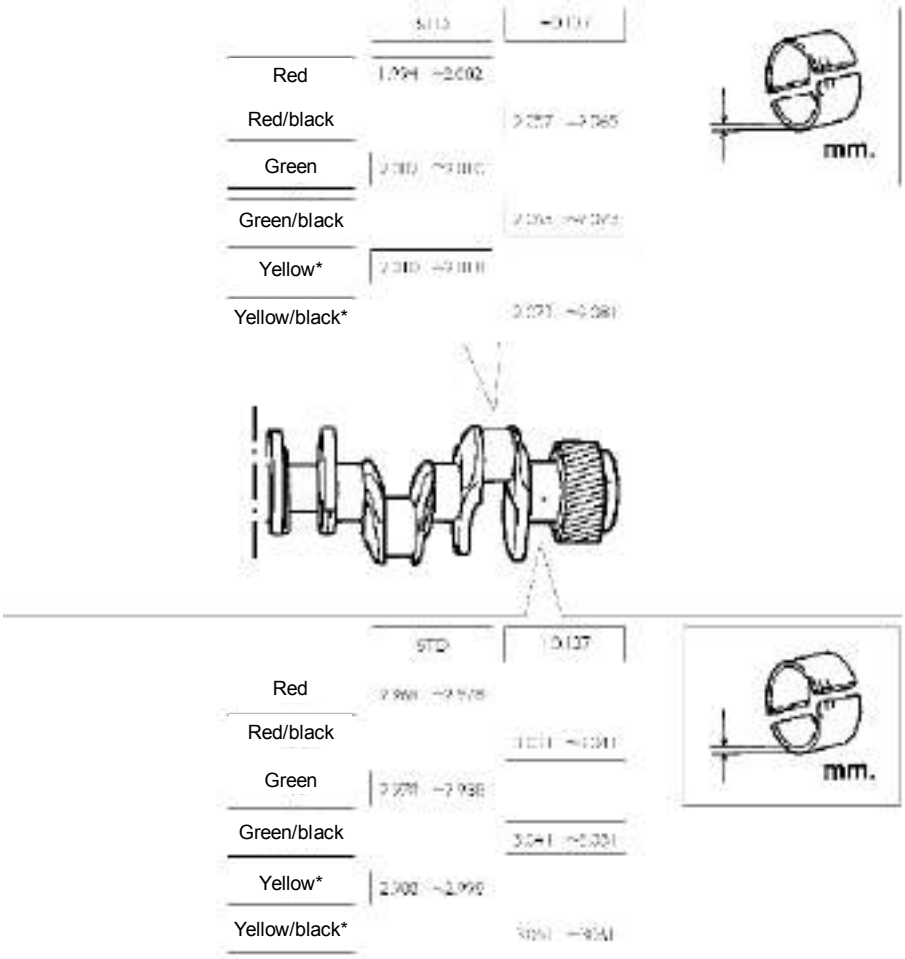

(*) Mounted in finished products only, not supplied as spare parts.

Determine the crank journal and crank pin diameter level (Journals with nominal diameter)

Crank journal and crank pin: Determine the diameter level.

Two groups of numbers are marked on the crankshaft (as shown by the arrow in the picture) (Figure 26, above):

- One is made up of 6 digits, corresponding to the diameter data of each crank pin (Figure 26, above).
- The other is 7 digits, corresponding to the diameter data of each crank journal (Figure 26, down).

Figure 26

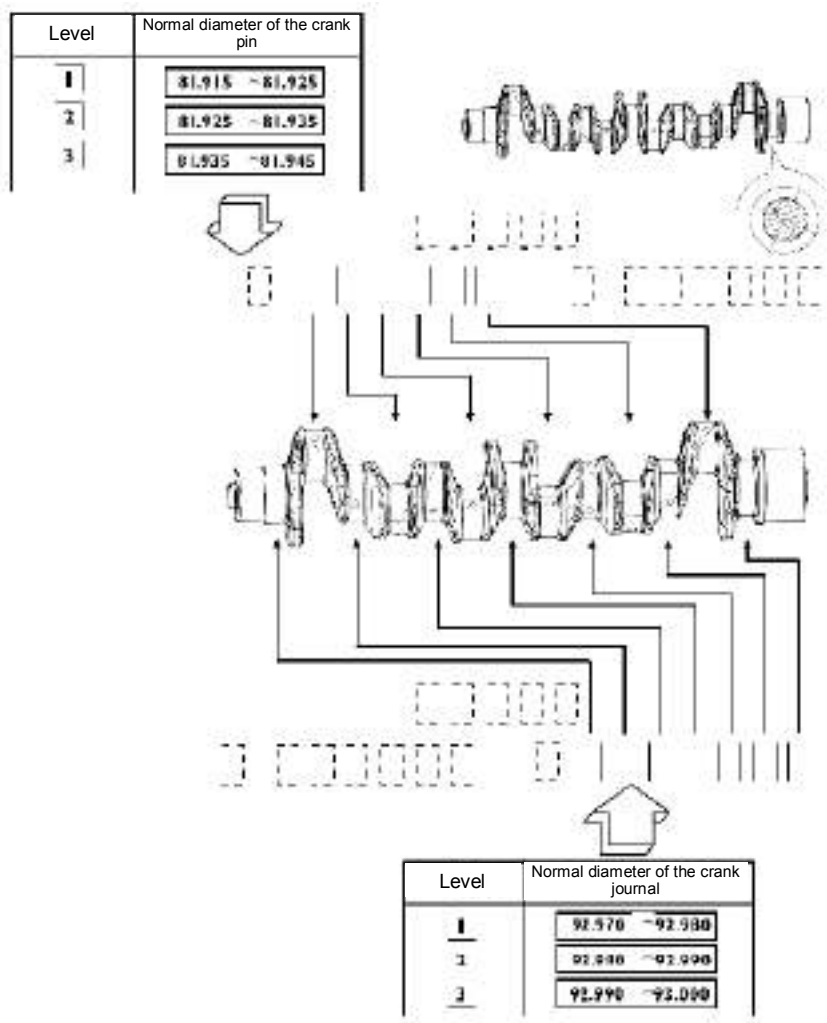

Select the main bearing (normal diameter)

Obtain necessary data of the cylinder block main bearing cap and crank journal, select the right bearing specification after comparison to the data given in the table below:

Figure 27

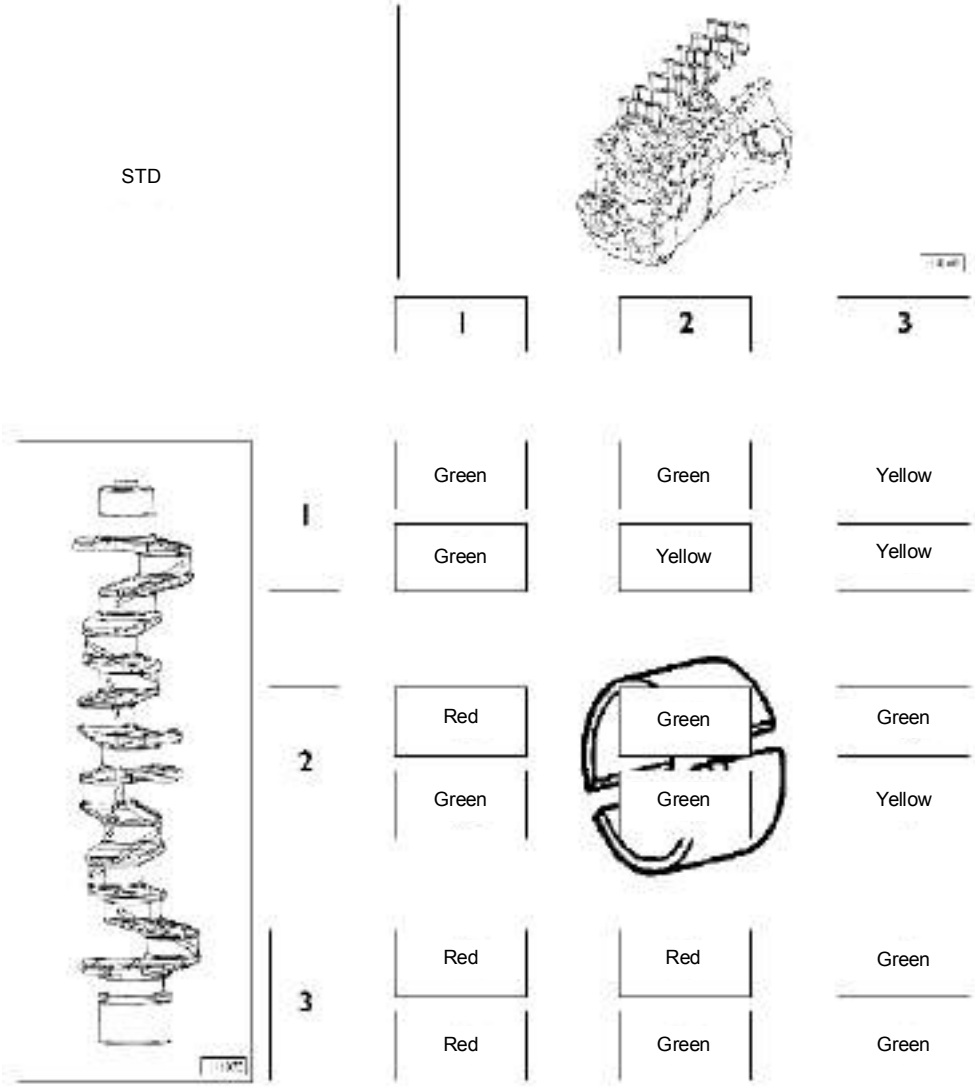

Select the main bearing (crankshaft corrected)

If the crankshaft has been corrected, the selection can be done according to the following methods.

At this point, make sure the new diameter of the crank journal is equivalent to the specified value given in the table. Install only bearing specification under size..

Figure 28

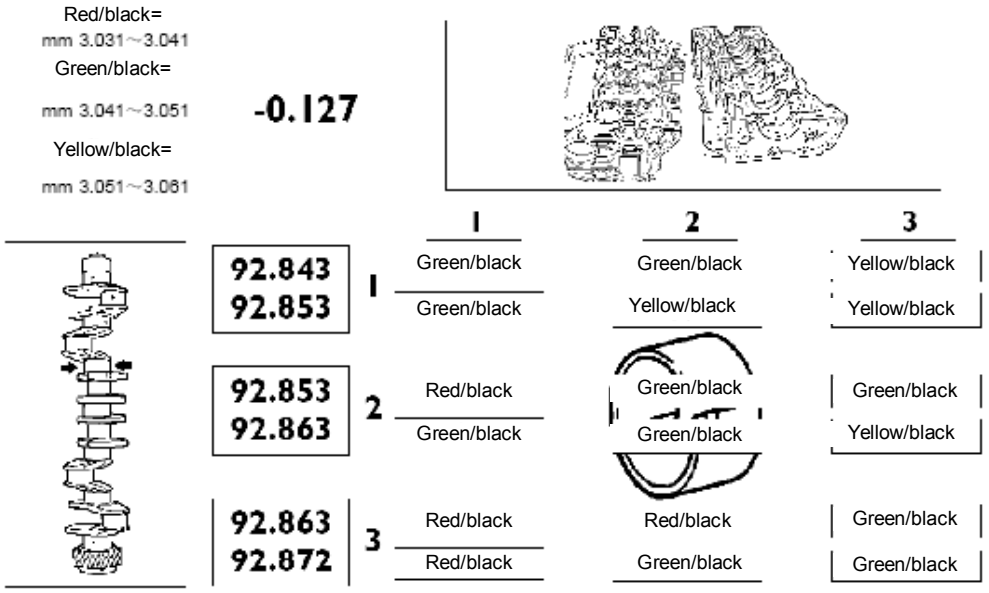

Select the con rod bearing (normal diameter)

There are 4 marks on the con rod (Figure 29):

1. Color marks, indicating weight
2. Color mark, indicating diameter level
3. Positioning stud bolt, visible from the front of the engine
4. Numeral serial number, indicating con rod

Note: *For the marked color indication, please refer to the table content of the con rod part of this section.*

The bottom hole diameter level of the con rod bearing may be 1, 2 or 3.
Compare with the table and select the correct con rod bearing specification (Figure 30).

Figure 29

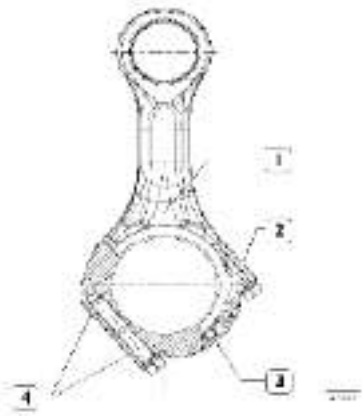

Figure 30

STD.

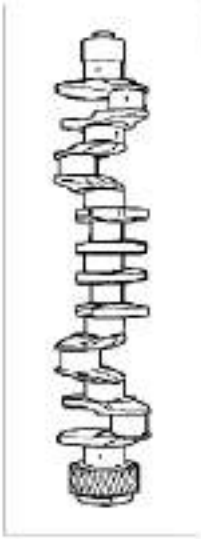

Level	1 Yellow	2 Green	3 Blue
1	Green	Green	Yellow
	Green	Yellow	Yellow
2	Red	Green	Green
	Green	Green	Yellow
3	Red	Red	Green
	Red	Green	Green

Select the con rod bearing (crankshaft corrected)

If the crankshaft has been corrected, the selection can be done according to the following methods.
At this point, make sure the new diameter of the crank journal is equivalent to the specified value given in the table. Install only bearing specifications under size.

Figure 31

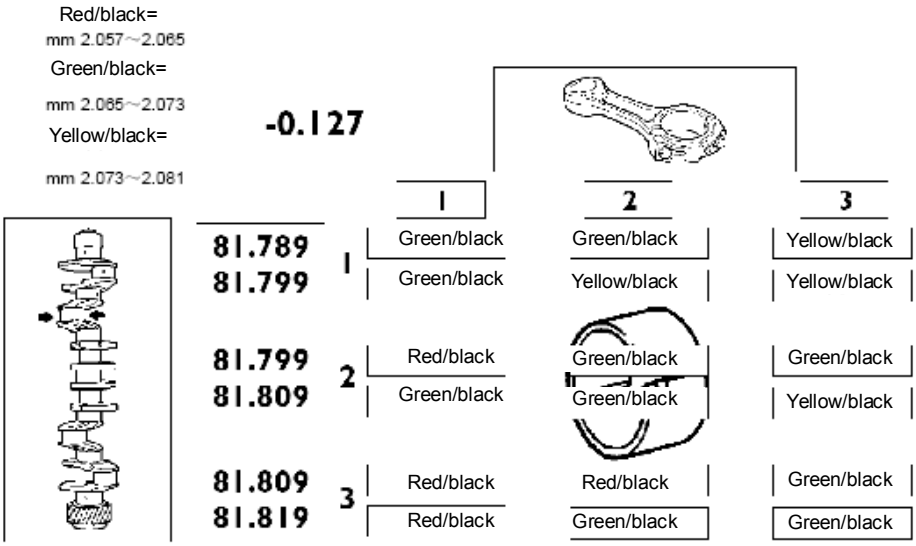

Change the crankshaft timing gear and crankshaft

Check the crankshaft timing gear for damage and wear. If existing, remove the gear using suitable tools.

Figure 32

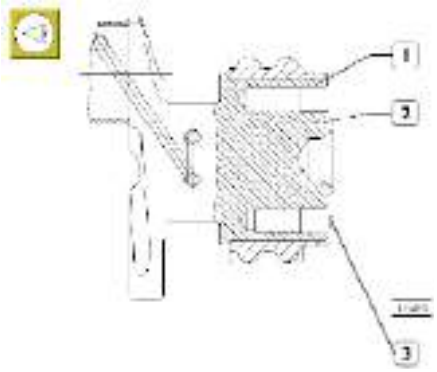

Note: *Before installing the gear, apply LOCTITE 603 adhesive to the crankshaft surface 30mm away from the contact area with a width of 5mm.*

Install the crankshaft timing gear (1) to the front end of the crankshaft (2) and heat 15 minutes in the oven with temperature no higher than 180℃.

Cool it after installation.

If the flywheel positioning pin (3) is changed, check the protrusion of the pin as shown in the picture after reinstallation.

Check the crank journal installation clearance

Figure 33

Install the nozzle (2) Align the pin to the hole (3) on the crank box.

As shown by Figure 18, install the bearing (1) and the thrust washer onto the crank journal seat.

Figure 34

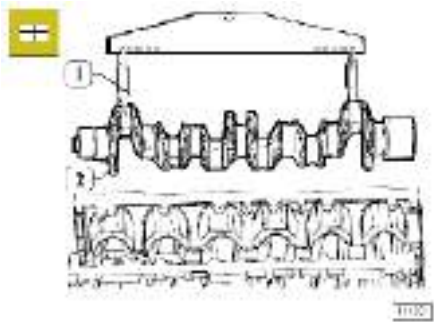

Install the crankshaft (2) by hoisting device and hook 99360500 (1).

Figure 35

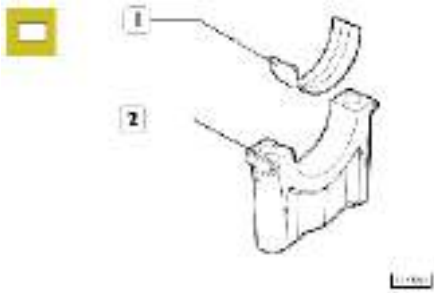

Install the main bearing (1) to the main bearing cap (2).

Check the installation clearance between the crank journal and main bearing.

Figure 36

Put a clearance measuring wire (2) of appropriate thickness on the crankshaft (3), parallel to the longitudinal axis.

Install the crank journal (1).

Figure 37

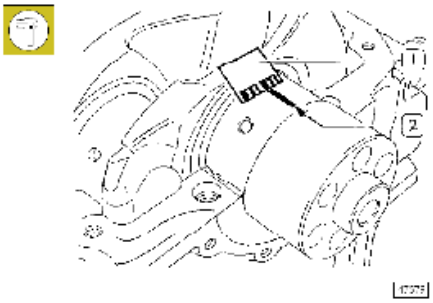

Remove the main bearing cap.

The clearance between main bearing and crank journal is obtained by comparison the measured width (2) to the clearance contrast plate (1).

The value of the clearance contrast plate shows the clearance, the unit is mm.

If the clearance obtained is different from the needed value, change the main bearing and re-perform the measurement.

Figure 38

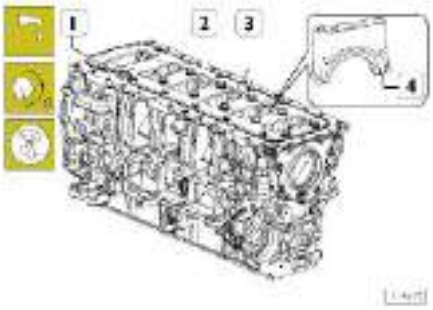

Install the main bearing cap (4) and reinforcement plate (2) by procedures stated hereinafter.

- ❑ Manually tighten the main bearing cap bolts (3) and reinforcement plate bolt (1) in sequence from main bearing caps 7 to 1.
- ❑ Then tighten the bolts by torque wrench in the same sequence.

First step: 140 Nm

Second step: 60°+60°

Check the crankshaft float clearance

Figure 39

As shown by the picture, place the magnet dial gauge (1) on the crankshaft (2) to check the float clearance.

If the valve obtained is higher than the specified value, change the thrust washer and reperform the inspection.

Piston con rod components

Figure 40

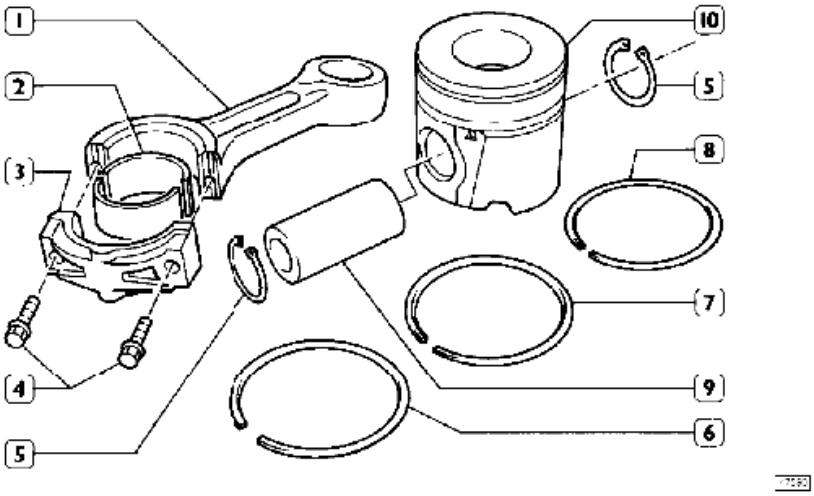

Piston con rod components

1. con rod 2. con rod bearing 3. con rod cap 4. con rod bolt 5. piston pin snap ring 6 oil ring 7. the 2nd compression ring 8. the 1st compression ring 9. piston pin 10. piston

Disassembling

Figure 41

Disassemble the piston ring (2) by piston ring caliper 99360184.

Figure 42

Disassemble the piston pin snap ring (2) by the spring caliper (1).

Figure 43

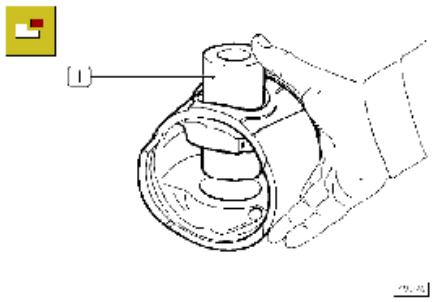

Remove the piston pin (1).
If it's difficult to disassemble, please adopt suitable tapping tool.

Figure 44

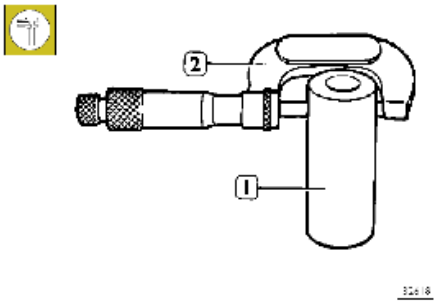

Measure the diameter of the pin (1) using a micrometer (2).

The correct piston pin-piston mating condition

Figure 45

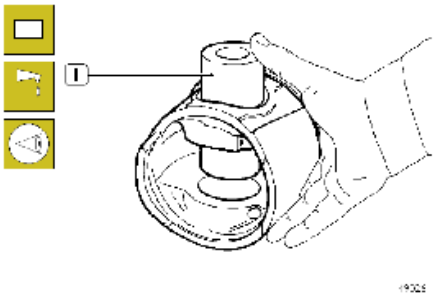

Lubricate the piston pin (1) and piston pin hole with oil. Hold the piston slightly with finger inserted inside the piston so the piston will not fall down due to gravity.

Figure 46

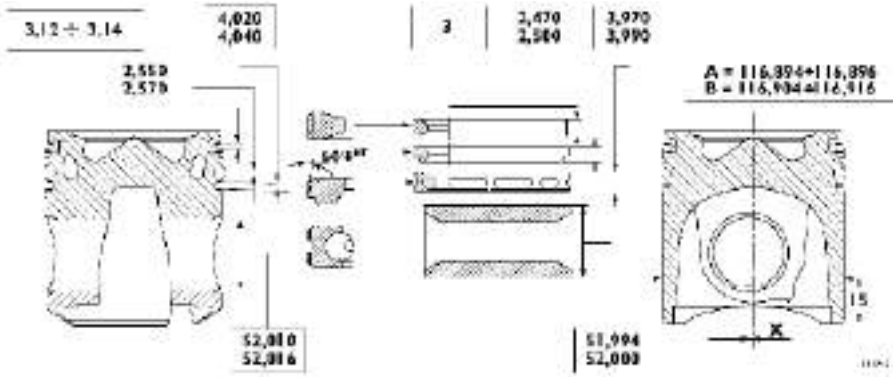

Major piston, piston ring and piston pin data

X = 0.6 ± 0.15

- Measure the dimensions with the predetermination of the diameter of Ø 113 mm.

Piston ring

Figure 44

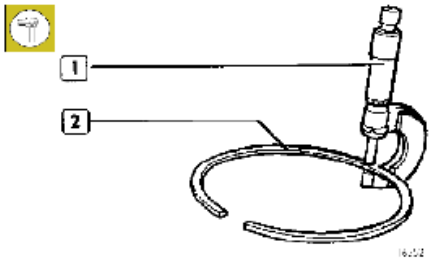

Check the thickness of the piston ring (2) with a micrometer (1).

Figure 48

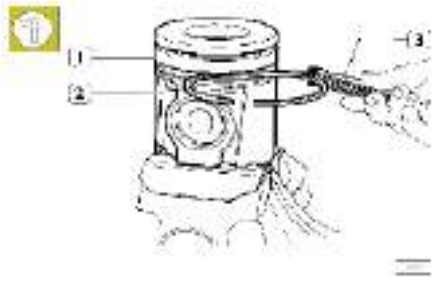

Measure the clearance between the piston ring (2) and piston ring groove (1) with a feeler (3).

Con rod

Figure 49

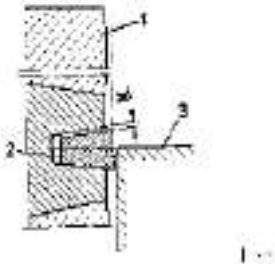

The first piston ring (2) is a keystone ring. Place the piston (1) and its piston ring inside the cylinder liner (3) with the piston ring half protruding outside the cylinder block, measure the clearance X between the seal ring and its shell.

Figure 50

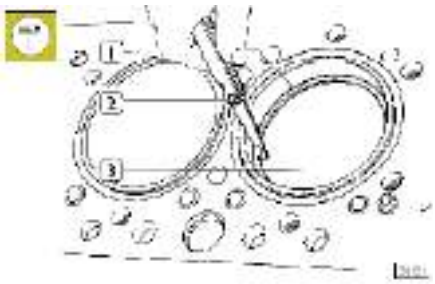

Check the gap clearance of the piston ring (1) by inserting the feeler (2) inside the cylinder liner (3).If the gap clearance is smaller or bigger than the needed value, change the piston ring.

When installing the con rod, inspection of the weight of all con rods should be carried out and they should be from the same supplier. The con rod / cap is of the looseness-proof type. Before assembling, check the con rod for damage. Each con rod can only use the matching con rod cap. If the mounting face of the con rod cap is reversed, don't use this con rod.

Figure 51

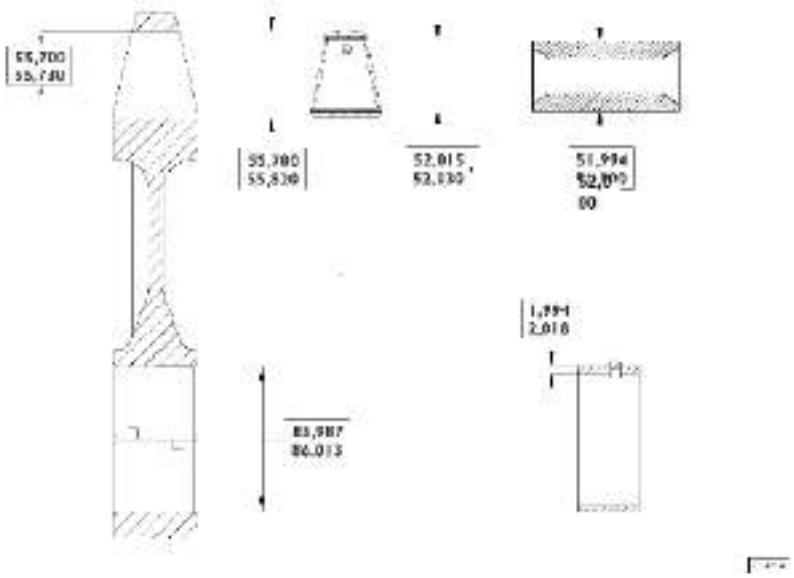

Major data for bushing, con rod, piston pin and con rod bearing

* Value that must be obtained after installation of bushing

1. The clearance between the con rod bearing and the con rod profile must be larger than 0.4mm.
2. The defective area at the mating place of the con rod and con rod cap must be less than 5mm^2.
3. The threaded section should be free from cracks.

Figure 52

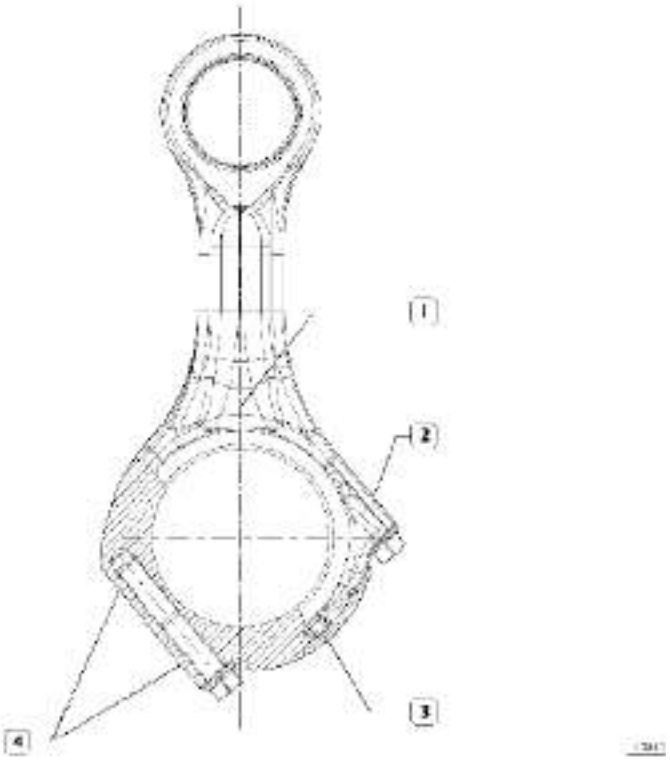

1. Color mark indicating weight 2. Color mark indicating diameter level
3. Positioning bolt, visible from the front of the engine 4. Numeral serial number indicating con rod

Weigh		Diameter	
Level A yellow	3450 g -3470 g	Ø 85.987-85.996	Yellow
		Ø 85.997-86.005	Green
		Ø 86.006-86.013	Blue
Level B green	3471 g -3490 g	Ø 85.987-85.996	Yellow
		Ø 85.997-86.005	Green
		Ø 86.006-86.013	Blue
Level C Blue	3491 g -3510 g	Ø 85.987-85.996	Yellow
		Ø 85.997-86.005	Green
		Ø 86.006-86.013	Blue

Check the con rod

Figure 53 (illustration)

Check the coaxiality

Check the con rod (1) aligning with con rod inspection tool (5) according to methods stipulated below:

- ❑ Install con rod (1) to the shaft of the tool (5) and tighten the con rod with screws (4).
- ❑ Install the fixed shaft (3) to the V block, place the con rod (1) on the stop rod (2).

Check the twisting

Figure 54 (illustration)

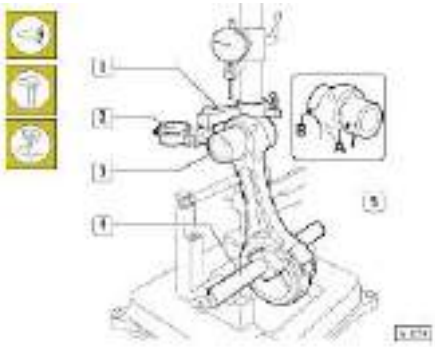

Compare two points (A and B) on the piston pin (3) horizon to check the twisting of the con rod (5):

- ❑ Install the dial indicator (2) onto the seat, reset the dial indicator (2) to Zero at a position about 0.5mm away from Point A on the piston pin (3).
- ❑ Translate the fixed shaft (4) and con rod (5), compare the offset of Point B on the other side of the piston pin (3). The deviation between A and B should not exceed 0.08mm.

Check the flexibility

Figure 55 (illustration)

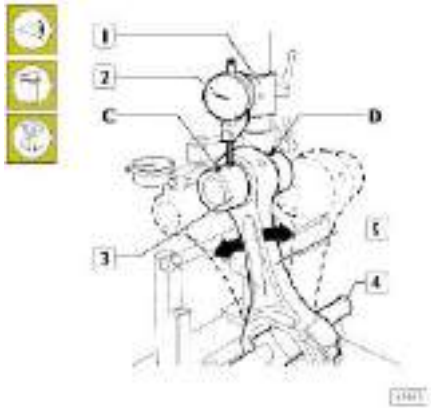

Compare two points (C and D) on the piston pin (3), to check the flexibility of the con rod (5):

- ❑ Mount the dial gauge (2) onto the vertical seat at Point C of the piston pin (3).
- ❑ Swing the con rod to the front and back and locate the highest position of the piston pin, reset the dial gauge (2) in this situation.
- ❑ Translate the fixed shaft (4) and con rod (5), repeat the operation to check the highest position of the piston pin (3) at Point D on the other side of the piston pin. The deviation between C and D should not exceed 0.08 mm.

Install the con rod-piston assembly

Reserve the procedures for disassembly above.

Figure 56

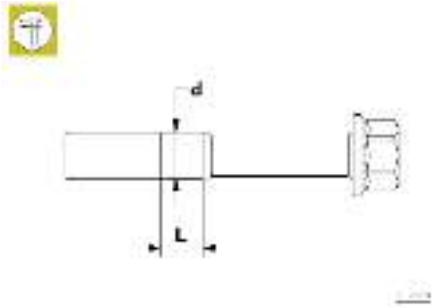

Note: *If the thread diameter is no less than 11.4 mm, it's not necessary to replace the screw.*

Install piston ring

Figure 57

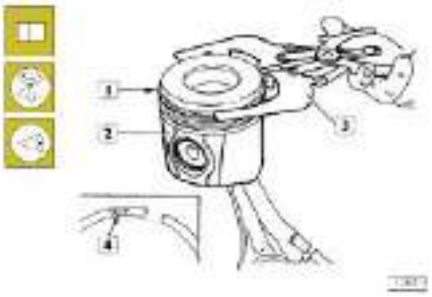

Install the piston ring (1) to the piston (2) by piston ring caliper 99360184 (3).

When installing the piston ring, the surface marked Top (4) should face upwards.

The three piston rings should be installed so the rings are staggered 120°to each other.

Install the con rod–piston assembly into the cylinder liner.

Figure 58

Select a suitable con rod bearing (1) by methods described above and install it to the con rod and con rod cap.

If the mounting direction of the con rod bearing is incorrect (1), reinstall it.

Note: *Pistons of level A are available as spare parts and can be installed to cylinder liner of level B.*

Install the con rod-piston assembly (1) into the cylinder liner (2) with piston installation tool 99360605 (Figure 60 No.1) and check the following facts:

- The gap of each piston ring is staggered 120°to each other.

Figure 60

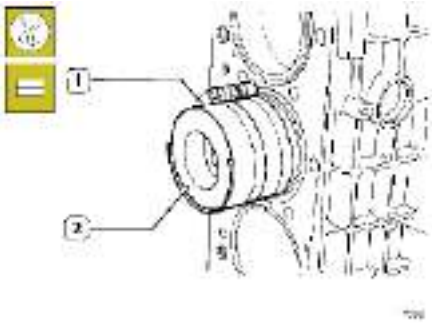

- All pistons are of the same level, A or B; and
- The mark on the top of the piston faces upwards.

Figure 59

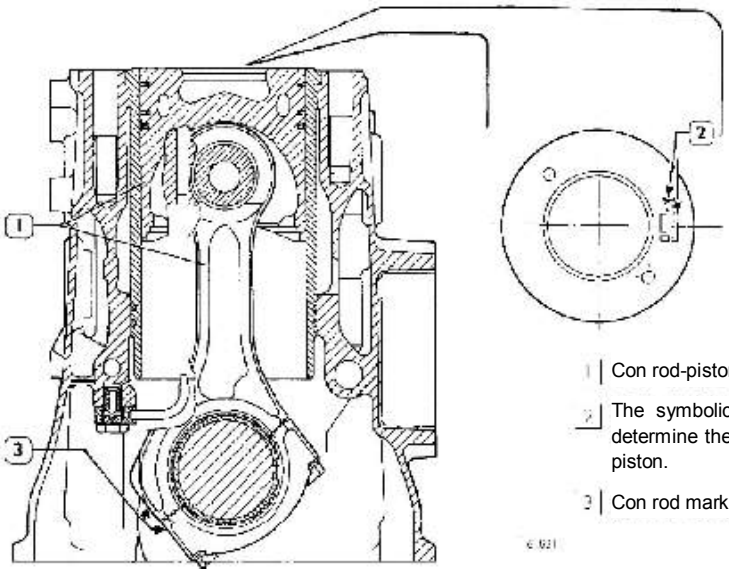

1 | Con rod-piston assembly

2 | The symbolic marks on the top of the piston determine the mounting position and level of the piston.

3 | Con rod marking area (refer to Figure 52).

Check the con rod big end installation clearance

Check the installation clearance by the following procedures: Connect the con rod to the crank pin and put a test line on the crank pin.

Figure 61

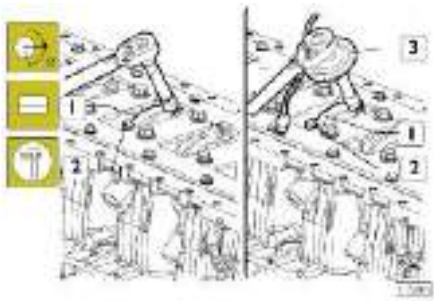

Install the con rod cap (1) and the con rod bearing, tighten the con rod cap fixing bolt (2) to a torque of 50±2.5 Nm (5±0.2 kgm).Turn the bolt a further 90°by angle protractor 99395216 (3).

Remove the con rod cap, check the clearance by comparing the test line width to the standard scales on the test comparison plate.

Cylinder head

Check the hydro seal provision of the cylinder head with a suitable tool before removing it; change the cylinder head if the leakage is not at the bowl-shaped plug or the thread plug.

Note: *If the plug is removed/changed, apply LOCTITE 270 sealant to it during reinstallation.*

Remove the valve

Note: *Before removing the cylinder head valves, record the positions observed when removing and number the valves for reinstallation (on the premise of the valve not being overhauled or changed).*

The difference between the intake valve and exhaust valve is: The intake valve has a notch at the center of the valve head.

Figure 62

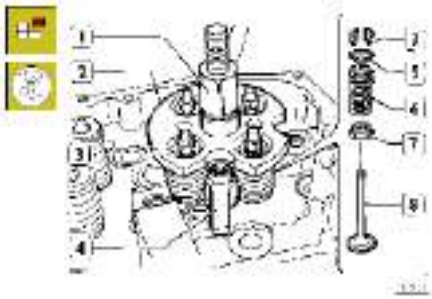

Install and fix the tool 99360264 (2) by using a supporting bracket (4), tighten with rod (1) until the valve lock pin (3) is removed and then remove the tool (2), valve spring upper retainer (5), valve spring (6) and the valve spring lower retainer (7).

Repeat the above-stipulated process.

Put the cylinder head upside down, remove the valve (8).

Check the planeness of the cylinder head

Figure 63 (illustration)

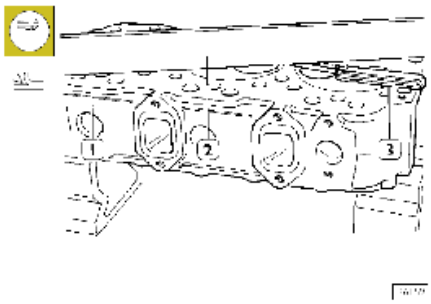

Check the planeness (1) by using a ruler (2) and feeler (3).If a distortion is detected, grind the cylinder head by using a suitable surface grinder, the maximum grinding of the material is 0.2mm.

Note: *After grinding, the valve depression and the injector protrusion should comply with the requirements specified in the relevant section.*

Valve
Valve guide

Figure 66

Remove the deposit and check the valve

Figure 64

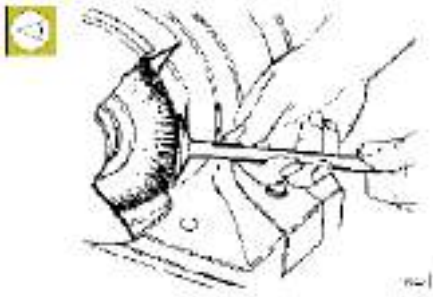

Clear the carbon deposit using a metal brush. Check the valve for eccentric wear or cracks.

Check the diameter of the valve stem with a micrometer caliper (refer to Figure 65), replace it if necessary.

Figure 65

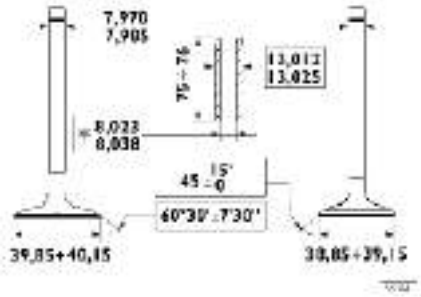

Major data for valve and valve guides

* Values obtained after the valve guide is installed

Check if the diameter of the valve stem is equal to the specified value by a micrometer caliper, grind the valve seat with a grinder if necessary (minimum material grinded).

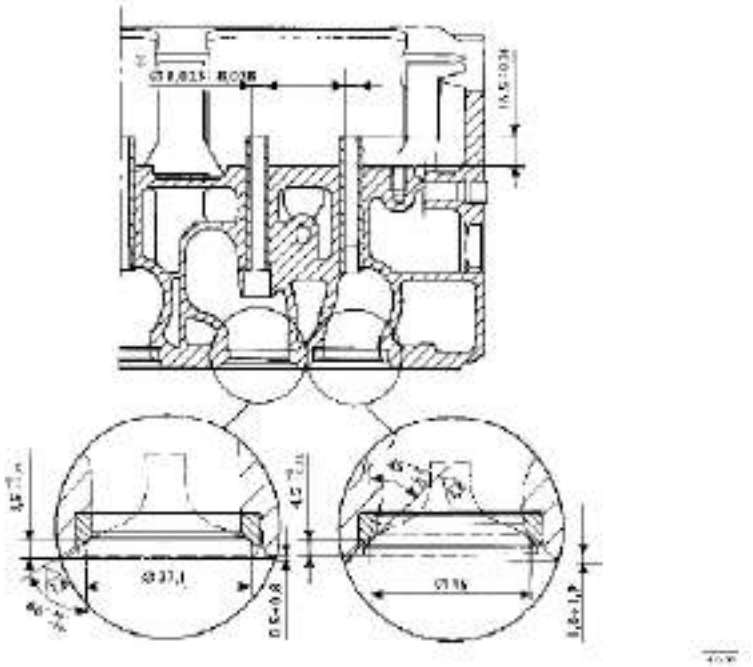

Installation diagram of the valve and valve guide

* Values obtained after the valve guide is installed

Replace the valve guide

Remove the valve guide with tool 99360288.

Install by tool 99360288 with accessory 99360294, this will help to install the valve guide into the cylinder head accurately so that the valve guide protrudes 16.3 to 16.7 mm outside the cylinder head (Figure 66).

Use a reamer 99390310 to ream the holes on the valve guide after it's installed.

Replace the valve seat

Remove the valve seat for changing by suitable tools.

Figure 67

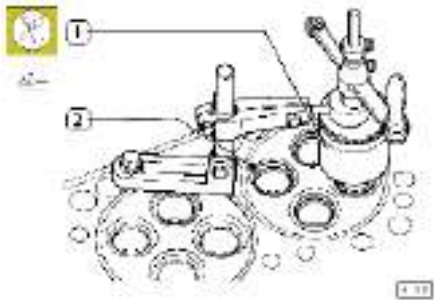

Ream the valve seat (2) with the tool (1).

Note: *The valve seat must be reamed whenever changing or grinding the valve or valve guide.*

After the valve seat is reamed, use tool 99370415 to verify the valve position is (referred to the cylinder head surface):

-0.5 ～ -0.8 mm (slotted), intake valve;

-1.6 ～ -1.9 mm (slotted), exhaust valve.

Replace the injector cover sleeve

Removal

Figure 68

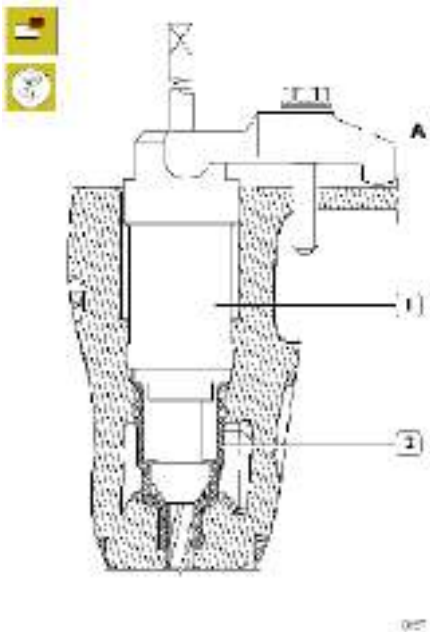

Replace the injector cover sleeve (2) by the following procedures:

- Use tool 99390804 to pass through the injector cover sleeve (2).
- Install the tool (1) to the cylinder head by press block A, carry out the processes shown in the following picture.

Figure 69

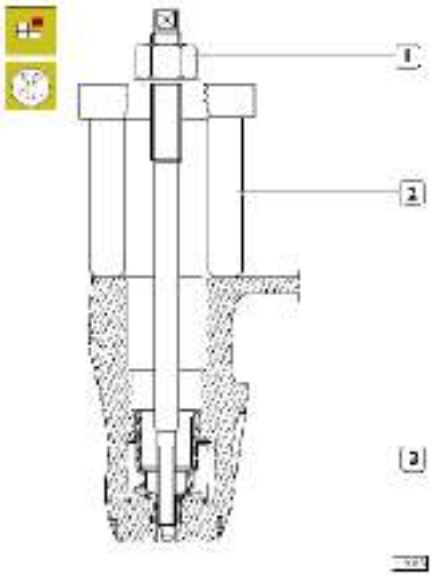

Fix the extractor 99342149 (2) onto the injector cover sleeve (3), tighten the nut (1) to detach the cover sleeve.

Figure 70

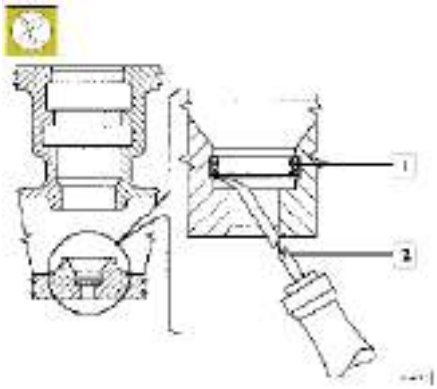

Clear the residue (1) in the cylinder head groove with tool 99390772 (2).

Figure 71

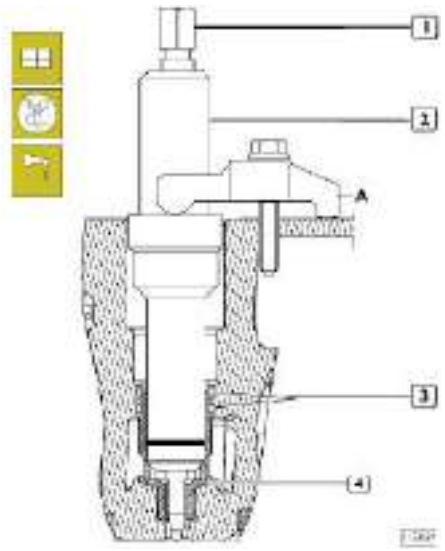

- Lubricate the O-ring (3) and fix it onto the injector cover sleeve (4), fix tool 99365054 (2) onto the cylinder head with press block A to install the new injector cover sleeve and tighten nuts (1) to mount the cover sleeve in place.

Figure 72

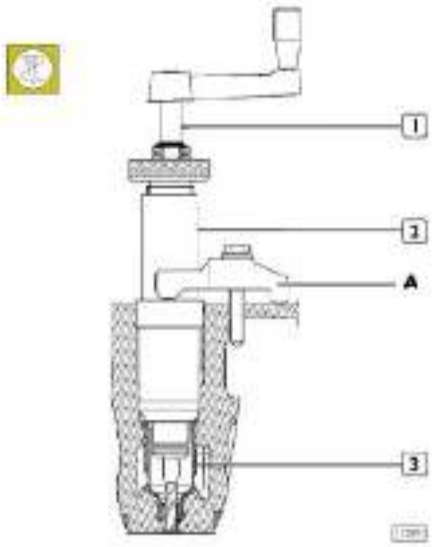

Ream the injector cover sleeve (3) with reamer 99394043 (1) and guide sleeve 99394045 (2).

Figure 73

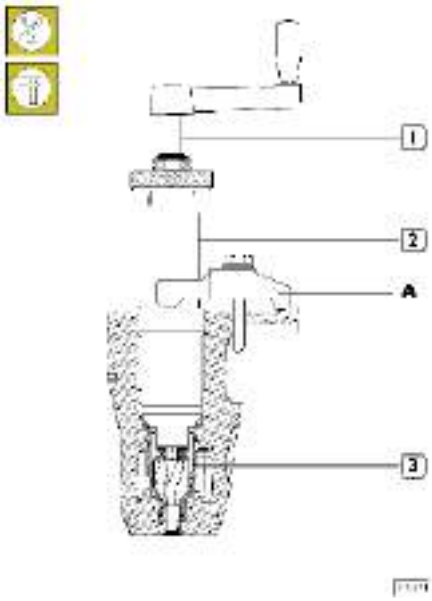

Ream the injector copper seat of the injector cover sleeve (3) with reamer 99394044 (1) and guide sleeve 99394045 (2).

Figure 74

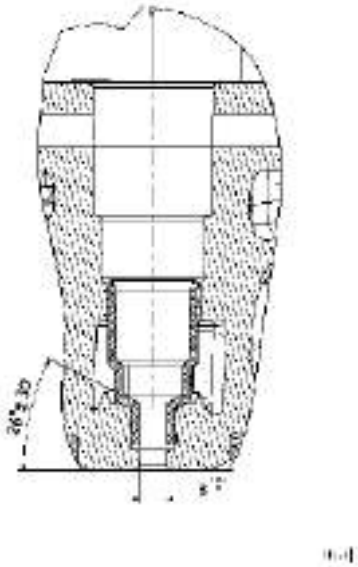

Installation diagram for the injector cover sleeve

Timing gearing

Camshaft driving unit

Figure 75

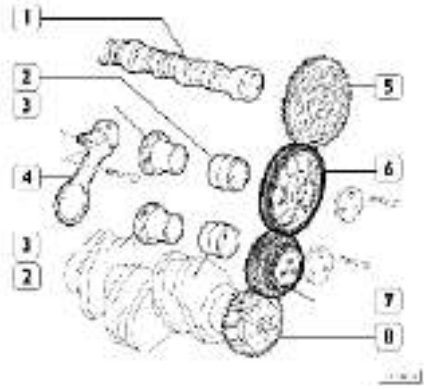

Timing control component

1. camshaft 2. shaft bushing 3. gear shaft
4. small con rod 5. camshaft timing gear
6. 1st intermediate gear 7. 2nd intermediate gear
8. crankshaft timing gear

Intermediate gear shaft

Figure 76

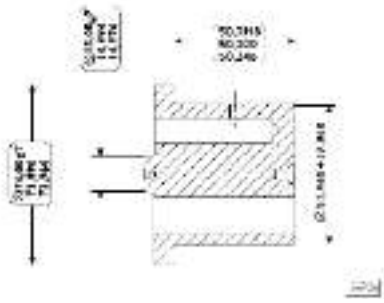

The installation clearance between the shaft bushing and gear shaft:

0.040~0.080 mm

1st intermediate gear

Figure 77

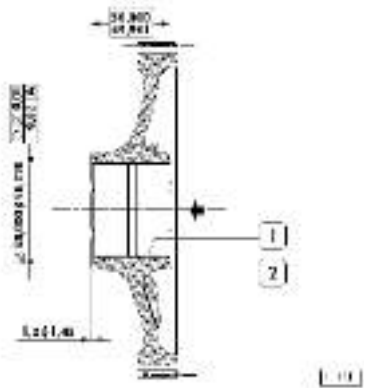

2nd intermediate gear

Figure 78

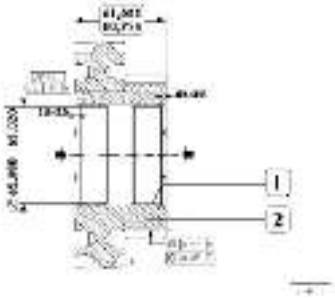

Shaft bushing

Replace the shaft bushing (Figure 77-78, No.1) if it's worn. Install and grind the shaft bushing to an outer diameter of Ø 65.010 ± 0.10 mm.

Note: *Install the shaft bushing into the intermediate gear (Figure 77-78, No.2) according to the arrow direction, locating in the position as shown in the picture.*

Camshaft

Check the cam lift and the camshaft roundness

Figure 79

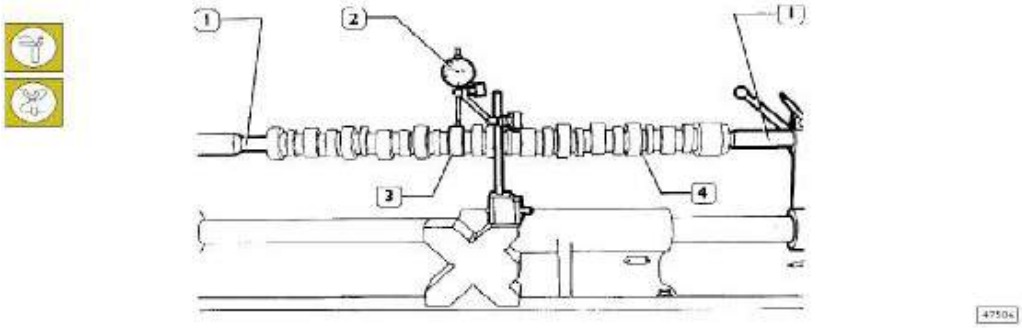

Place the camshaft (4) on the needle seat (1), check the cam lift (3) with a dial gauge (2), the lift value. Please refer to the reference table stipulated above.

Figure 80

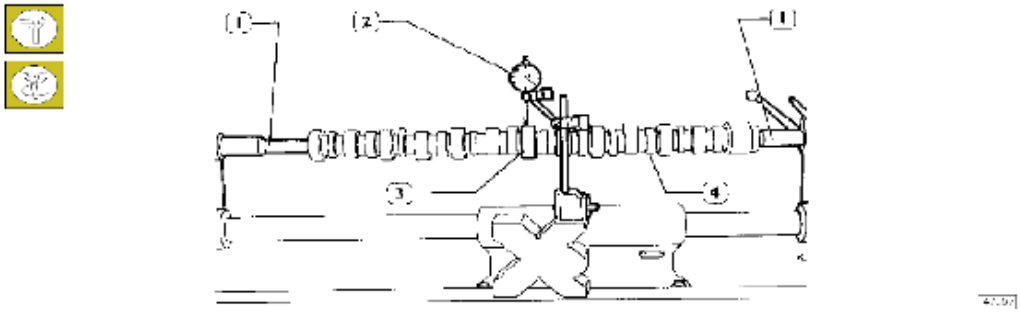

After the camshaft (4) is mounted onto the needle seat (1), check the journal run-out (3) with a dial gauge (2); the run-out should not exceed 0.030 mm.

If it exceeds this value, the camshaft should be changed.

Figure 81

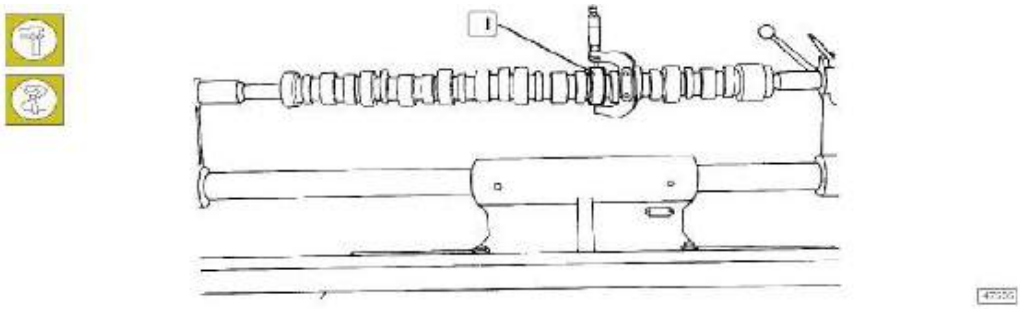

For checking the installation clearance, measure the inner diameter of the camshaft bearing and the journal (1) diameter. The difference between the two is the actual installation clearance.

If the clearance exceeds 0.150 mm, change the camshaft bearing. Replace the camshaft if necessary.

Figure 82

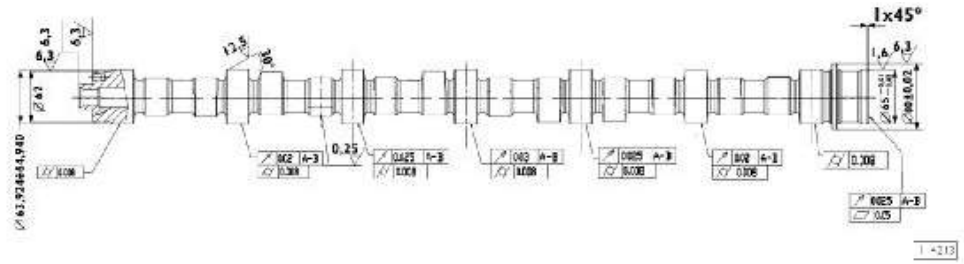

Major data of the camshaft

The journal and cam surface should be very smooth, if any traces or scratches are found, change the camshaft and bearing.

Item	Characteristics	Symbol
Positioning	Verticality	⊥
Position	Concentricity or coaxiality	◎
Run-out	Circular run-out	↗
Importance of the product characteristics		**Symbol**
key		©
Important		⊕
Minor		⊖

Camshaft bearing

Figure 83

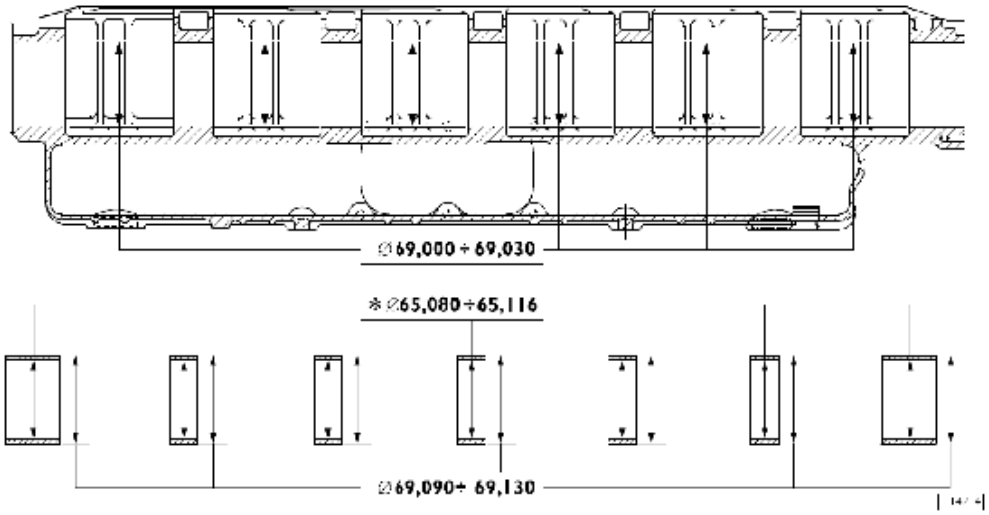

Major data of the camshaft bearing and bottom hole

* the camshaft bearing inner diameter after installation

If any wear or scratches are found on the camshaft bearing surface, it must be replaced

Measure the camshaft bearing inner diameter with gauges; if the value measured exceeds the tolerance, replace the camshaft bearing.

Use tool 99360487 to assemble or disassemble the camshaft bearing

Replace the camshaft bearing

Removal

Figure 84

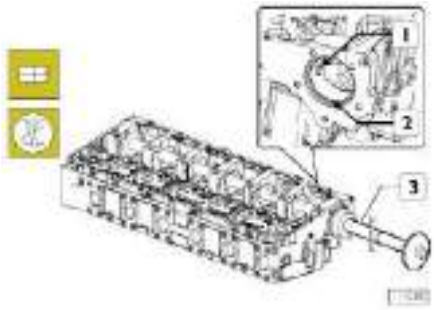

Remove the camshaft bearing (2) with tool 99360505 (3) (as shown in the picture)

Before removal, the tapping tool should be correctly positioned.

Assembling

For assembling, reverse the procedures of removal. Be careful of the lubrication hole (1): on the camshaft bearing, the hole should coincide with the hole on the cylinder head.

Figure 85

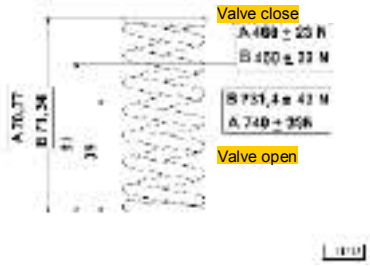

Major data of the valve spring

Rocker arm shaft ASSY

Figure 88

Install the valve and valve oil seal

Figure 86

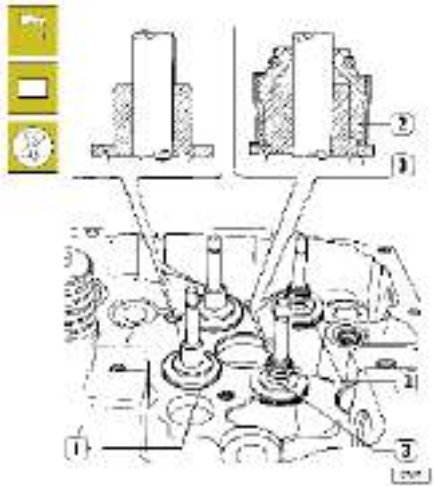

Lubricate the valve stem, insert the valve to the corresponding valve guide and install the valve spring lower retainer (1).Install the valve oil seal (2) into the valve guide (3) using tool 99360329 and install the valve according to the following procedures.

Note: *If the valve hasn't been overhauled or changed, reinstall it according to numbers given when removing.*

The difference between the intake valve and exhaust valve is: The intake valve has a notch at the center of the valve head.

Figure 87

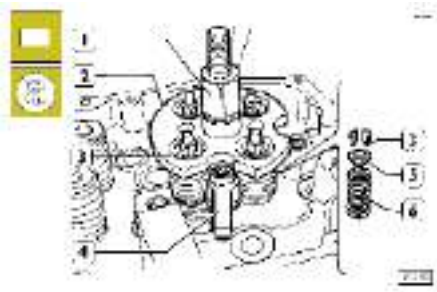

Install the valve spring (6) and the valve spring upper retainer (5).

Install the tool 99360264 (2) and fix it with a press block (4), tighten the rod (1) until the valve split collet (3) is well installed, remove the tool (2).

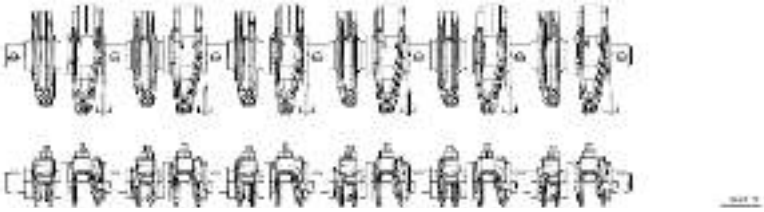

The 12 valve rocker arms are directly controlled by the cam of the camshaft.

The intake valve rocker arm is directly installed on the rocker arm shaft, while the exhaust valve rocker arm is connected to the rocker arm through the engine brake control eccentric sleeve The rocker arm skids along the cam profile by the roller. While the other end acts on the valve bridge between the 2 valve stems.

There is washer between the adjustment screw and the valve bridge and two lubrication holes are inside the rocker arm. The rocker arm shaft is almost passing through the whole cylinder head; when removing the rocker arm shaft, the rocker arm has to be removed together.

Rocker arm shaft

Figure 89

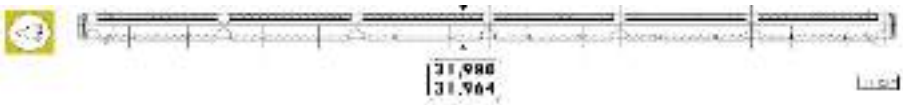

Major data of the rocker arm shaft

Check the rocker arm shaft surface for scratches or wear, if such occur, replace the rocker arm shaft.

Rocker arm

Figure 90

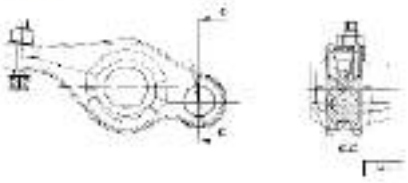

Exhaust rocker arm

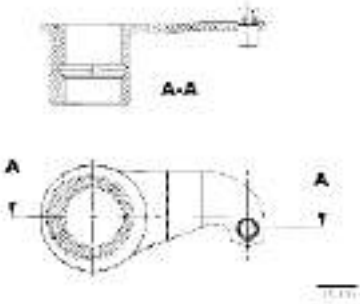

Figure 91

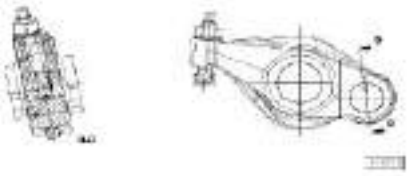

Intake rocker arm

Figure 92

The surface of the engine brake control sleeve should be free from scratches or excessive wear, otherwise the engine brake control sleeve or the entire exhaust rocker arm should be changed.

Repair service

Note: *If the charging system is found to malfunction, it's recommended to check the validity of the seal gasket and the tightness of the connecting sleeve prior to checking the turbocharger, meanwhile, check the intake pipe and air filter for blockage.*

If the turbocharger is damaged due to lacking of lubricant, check the oil passage for damage. If there is damage, change the component or eliminate the relevant causes.

After the above-stipulated checks, check the working condition of the charger according to the engine testing methods of the SIH diagnosis equipment.

Note: *This test must be carried out under the following conditions:*

- Engine coolant temperature >50 ºC;
- Battery voltage >22v.
- Valid recharging system.

If the value measured is beyond the tolerance range, please check the availability of the following aspects:

- By-pass valve
- Intake air pressure sensor;
- The harness connection of the intake pressure sensor (e.g. oxidization, clean by special cleanser).
- VGT solenoid valve insufficient power supply (continuous connection);
- For seized actuator during active diagnosing stipulated in the relevant sections, apply Kernite lubricant to the bushing (under high temperature), if the fault remains, change the actuator.
- Sliding shaft bushing: When operated manually, it must slide freely. If it's seized, or no faults are found to other devices, change the turbocharger according to the standard specification with prior authorization by the Customer Service Center.

Variable geometry control (exclusive to engine F2CE0681A*)

Figure 93

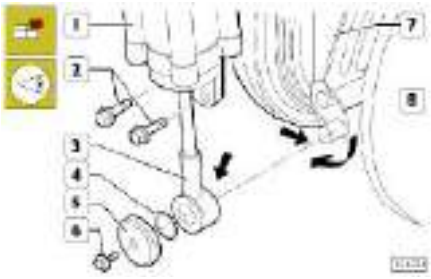

Loosen the bolt (2), extract the actuator (1) from the turbocharger (7).

Remove the screw (6), shim (5) and washer (4) to disconnect the variable geometry from the actuator con rod.

Clean the pin of the variable geometry operating lever (8) and the sliding shaft bushing of the con rod (3).

Note: *Do not use sand paper.*

Visually inspect the surfaces of the con rod (3) sliding shaft bushing and operating lever (8); if any wear is found, change the actuator (1) or the turbocharger (7).Check the mobility of the drive unit inside the variable geometry by handling the operating lever (8), no block is permissible; otherwise, clean the turbine according to the description in relevant section.

Check the actuator (exclusive to engine F2CE0681A*)

Figure 94

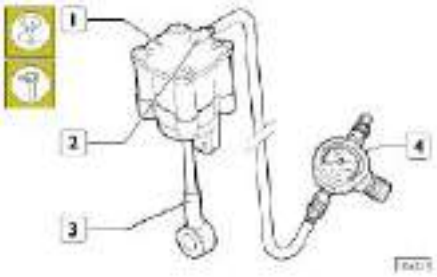

Check the functionality of the actuator (1) by the following operation:

Connect the compressed air supply pipe with regulator (4) to the joint (2) of the actuator (1). Slowly adjust the compressed air entering into the actuator (1) from 0 to 3.5bar by the regulator; the con rod (3) of the actuator (1) must be able to move freely, otherwise, change the actuator (1).

Figure 95

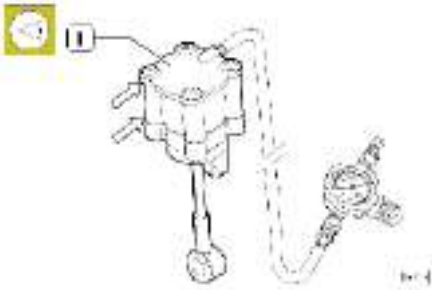

Check the actuator leakage at the (⇨) indication position using soapsuds.

When the actuator (1) is filled with compressed air, no bubble should be found at the above-described position (⇨), otherwise, change the actuator (1).

Figure 96

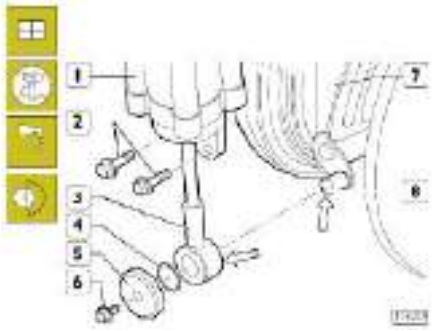

Lubricate the shaft bushing (position) of the con rod (3) and operating lever (8) (⇨ position) by lithium Castrol LM, then connect the actuator (1) to the turbocharger (7) to perform the following operations:

- ❑ Connect the con rod (3) to the operating lever (8).
- ❑ Install washer (4) and shim (5) and tighten the screw (6).
- ❑ Mount the actuator (1) to the turbo compressor (7) with bolt (2) and tighten.
- ❑ Tighten the bolts (2 and 6) to torque of 25 Nm.

Check the actuator travel (exclusive to engine F2CE0681A*)

Figure 97

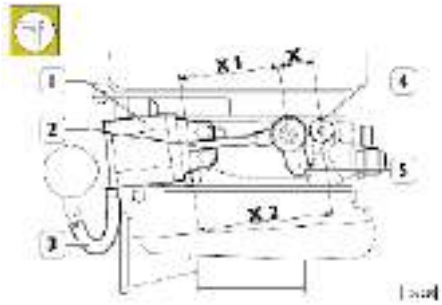

Check the travel X of con rod (2) of actuator (1) by operating as follows.

- ❑ Measure the distance X1 from the actuator (1) and hole (4).
- ❑ Connect the compressed air supply pipe (3) with regulator to the actuator (1).Slowly adjust the compressed air from 0 to 3.5bar by the regulator, until the operating lever (5) is pushed to the end of the travel.
- ❑ Measure the distance X2 from the actuator (1) and hole (4).
- ❑ The travel X of the actuator (1) con rod (2) is equal to X2-X1, the result must be 11.5±0.5mm.

Clean the charger body

Figure 98

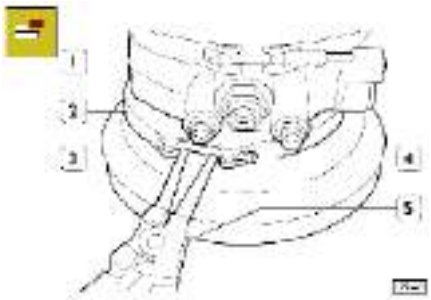

- ❑ The clip (2) position on the central body (1).
- ❑ Spray the anti-oxidization additive to the thread and nut (4), unscrew the nut (4) to loosen the clip (2).
- ❑ Gently turn and peel off the clip (2) with pliers (5).
- ❑ Mark the mounting position of the turbine body (3) on the central body (1).

Figure 99

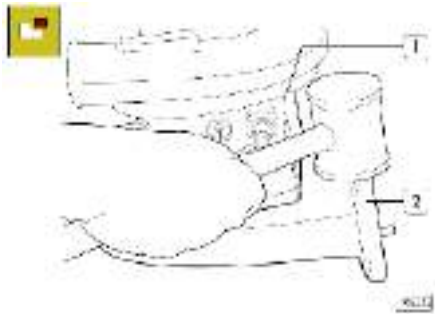

Detach the turbine body from the central body (1) by taping on the opposite points (~180º) of the turbine body (2) with a brass hammer.

Note: *Take care not to damage the turbo during the operation.*

After the turbine body is detached, check the mobility of the variable geometry according to the description in the relevant section; if the corresponding location can't operate according to the inspection methods described above, change the turbo compressor.

Figure 100

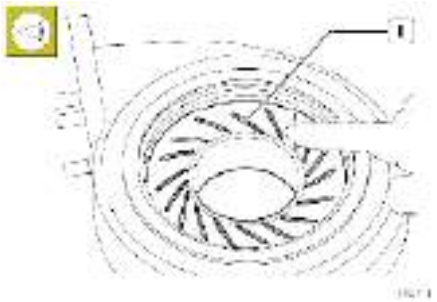

Correctly wash the groove ring (1) and the carbon-accumulated position of the turbine body and check the mobility of the ring, otherwise, change the turbo compressor.

Note: *Slight cracks are acceptable between the groove and ring, because they will not interfere with the working condition of the turbo compressor.*

Figure 101

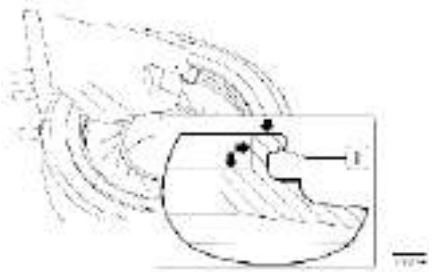

Correctly wash the surface (➔) of the turbine body (1) with suitable tools, take care not to damage the surface.

Figure 102

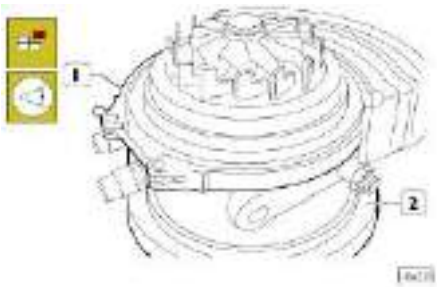

Remove the clip (1) from the central body (2), check that the clip is not damaged, otherwise, change the clip.

Figure 103

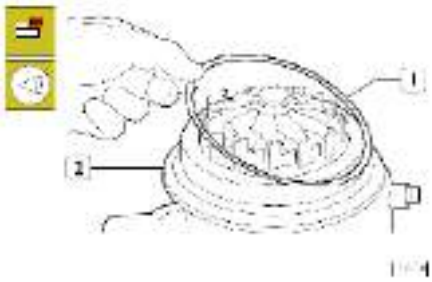

Remove the seal ring (1) matching the central body (2). Correctly wash the seal ring (1) and check that it's not damaged, otherwise change the seal ring.

Figure 104

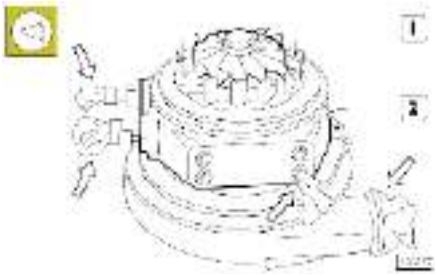

When checking the turbo (1), the following are not acceptable: Accumulated carbon, distortion cracks, scratches and seized turbo, etc..

Check the turbine rotor stem (1) clearance with a dual gauge.

If the clearance exceeds the standard tolerance or the above-mentioned defectives are found, change the turbocharger.

Note: *protect the intake and outlet ports (⇨) of fuel, water and air before washing the turbo, to avoid entry of the contaminants and foreign matters.*

Figure 105

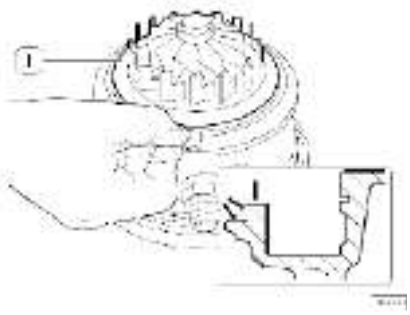

Correctly wash the surface (➔) of the turbine body (1) by suitable tools, care not to damage the surface and the variable geometry ring (if applicable).

Wash the surface of the variable geometry ring by compressed air.

Re-check the following according to the descriptions of the relevant section:

- The mobility of the variable geometry;
- actuator;
- actuator travel.

Figure 106

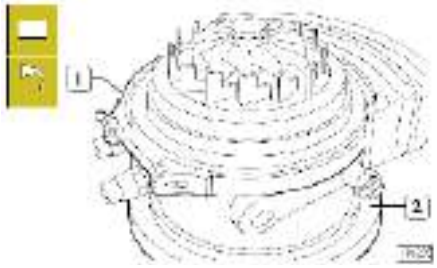

Install the clip (1) to the central body (2).

Note: *The clip (1) is substitutable with an integral heat insulator, but an actuator with an integral heat insulator must be reinstalled into the current position.*

Properly put the washed seal ring on the central body.

Apply a thin layer of anti-scuff agent to the mating surfaces of the washed central body and turbine body.

Figure 107

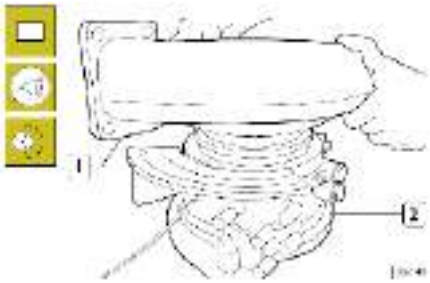

Install the turbine body (1) to the central body (2), take care not to damage the turbo and the variable geometry groove ring (if applicable).Do not force if any interference occurs, otherwise the control system of the variable geometry may be damaged.

Make sure the turbine body and the central body are matching correctly after installation.

Place the turbine body and clip to the marked position on the center of the body.

Turn the clip and tighten the nut to a torque of 11.3 Nm.

Re-check the following according to the descriptions of the relevant section:

- Actuator;
- Actuator travel.

Tightening Torque

PART			Torque	
			Nm	kgm
Oil cooling nozzle union		M12X1.5	35 ±2	3.5 ± 0.
Oil cooler retaining bolt		M12X1.75	63 ±7	6.3 ± 0.7
plug			125 ± 15	12.5 ± 1.5
Retaining bolt for the high-pressure fuel pump and the mounting seat		M10	41.5 ±3.5	4.1 ± 0.3
The gear chamber retaining bolt (to cylinder block)				
		M10X1.25	41.5 ±3.5	4.1 ± 0.3
		M12X1.75	63 ±7	6.3 ± 0.7
		M8X1.25	23.5 ± 1.5	2.3 ± 1.5
The cylinder head retaining bolt ♦				
1st step	pretightening		50 ± 2.5	5 ± 0.2
2nd step	pretightening		100 ±5	10 ± 0.5
3rd step	angle pretightening		90°± 4.5°	
4th step	angle pretightening		75°± 3.5°	
The rocker arm shaft retaining bolt		M12X1.75	104.5 ± 10.5	10.4 ± 1
Lock nut for the rocker arm shaft adjusting screws ♦			39 ±5	3.9 ± 5
Injector block screw ♦				
		M10	41 ±3	4.1 ± 0.3
Shackle retaining bolt (to cylinder head) ♦			23.5 ± 3.5	2.3 ± 0.3
Engine suspension retaining bolt (to cylinder head)			74 ±8	7.4 ± 0.8
Retaining bolt for the camshaft timing gear ●		M10X1.5X45		
1st step:	Pretightening		25 ± 1.2	2.5 ± 0.1
2nd step:	Pretightening		45° ± 2°	
Timing information disc retaining bolt			8.5 ± 1.5	0.8 ± 0.1
Exhaust pipe retaining bolt ●				
Pretightening			32.5 ± 7.5	3.2 ± 0.7
Tightening:			47.5 ± 2.5	4.7 ± 0.2
Con rod cap retaining screws: ♦		M12X1.25		
1st step:	pretightening		50 ± 2.5	5 ± 0.25
2nd step:	pretightening		90 ± 45	
Flywheel retaining bolt ♦		M18X1.5X72		
1st step:	pretightening		120 ± 6	12 ± 0.6
2nd step:	pretightening		90° ± 4.5°	
Crankshaft pulley retaining bolt ♦				
1st step:	pretightening		70	7
2nd step:	pretightening		50°	
Main bearing cap retaining bolt ♦		M16X2		
1st step:	pretightening		140 ± 7	14 ± 0.7
2nd step:	pretightening		60° + 60° ± 3°	
Retaining bolt for the gear chamber cover		M10X1.5	41.5 ± 3.5	4.1 ± 0.3
Retaining bolt for the gear chamber cover		M12X1.75	63 ± 7	6.3 ± 0.3

♦ Lubricate by MOLYKOTE oil before assembling.

● Lubricate with graphitized oil before assembling

PART		Torque	
		Nm	kgm
Shock absorber retaining bolt ♦		115 ± 15	11.5 ± 1.5
Retaining bolt for the intermediate gear shaft ♦	M12X1.75X90		
1st step pretightening		30 ±1.5	3 ± 0.1
2nd step angle closing		90°±4.5°	
The small con rod retaining bolt		24.5 ± 2.5	2.4 ± 0.2
Oil pump retaining bolt		24.5 ± 2.5	2.4 ± 0.2
Oil strainer retaining bolt		24.5 ± 2.5	2.4 ± 0.2
Front cover retaining bolt (to cylinder block)		19 ± 3	1.9 ± 0.3
ECU retaining bolt		19 ± 3	1.9 ± 0.3
Retaining bolt for the fuel filter mounting (to cylinder head) ♦	M10X1.25X60	37 ± 3	3.7 ± 0.3
Engine suspension retaining bolt (to gear chamber) ♦			
1st step pretightening		100 ± 10	10 ± 0.1
2nd step angle closing		60°±6°	
Retaining bolt and nut for the turbocharger ●			
Pretightening		32.5 ± 7.5	3.2 ± 0.7
Tightening:		46 ± 2	4.6 ± 0.2
Water pump retaining bolt (to cylinder block)		24.5 ± 2.5	2.4 ± 0.2
Pulley fastening nut		55 ± 5	5.5 ± 0.5
Nut for rocker arm adjustment screw		8.5 ± 1.5	0.8 ± 0.1
Thermostat retaining bolt (to cylinder head)		24.5 ± 2.5	2.4 ± 0.2
Automatic tensioner retaining bolt (to cylinder block)		45 ± 5	4.5 ± 0.5
Tensioner retaining bolt (to cylinder block)		105 ± 5	10.5 ± 0.5
Fan mounting retaining bolt (to cylinder block)		24.5 ± 2.5	2.4 ± 0.2
Starter retaining bolt		44 ± 4	4 ± 0.4
Air heater		30 ± 3	5 ± 0.5
Power steering pump retaining bolt		105 ± 5	10.5 ± 0.5
Air compressor retaining bolt (to mounting)		24.5 ± 2.5	2.4 ± 2.5
Alternator retaining bolt		71.5 ± 4.5	7.1 ± 0.4
Alternator mounting retaining bolt (to cylinder head)		24.5 ±2.5	2.4 ± 0.2
Water pump intake pipe		35 ± 3.5	3.5 ± 0.3
Water temperature sensor		32.5 ± 2.5	3.2 ± 0.2

♦ Lubricate by MOLYKOTE oil before assembling.
● Lubricate with graphitized oil before assembling

PART		Torque	
		Nm	kgm
Crankshaft sensor retaining bolt		8±4	0.8 ± 0.4
Camshaft sensor retaining bolt		8±4	0.8 ± 0.4
P.D.E solenoid connector fastening screw		1.62 ±0.3	0.1 ±0.3
Charging pressure sensor fastening screw		8±2	0.8 ± 0.2
Absolute pressure sensor fastening screw		22.5 ± 2.5	2.2 ± 0.2
P.W.M. control valve fastening screw/nut		8±2	0.8 ± 0.2
Fuel/water temperature sensor		35 ± 3.5	3.5 ± 0.3
Water temperature indicator		23.5 ± 2.5	2.3 ± 0.2
Fuel filter blocking sensor		10± 1	1 ±0.1
Oil temperature switch		25 ± 1	2.5 ±0.1
Oil pressure sensor		25 ± 1	2.5 ±0.1
Harness fastening screw		8±2	0.8 ± 0.2
Gear fastening screw (to camshaft)	M14X2X50		
1st step pretightening		40 ± 4	4 ± 0.4
2nd step pretightening		30°±3°	
Gear fastening screw (to camshaft)	M14X2X50		
1st step pretightening		60 ± 6	6.0 ± 0.6
2nd step pretightening		45°±4.5°	
Heater fastening screw	M8	24.5 ± 2.5	2.5 ± 0.2
Gear fastening screw (to camshaft)	M10X1.25		
1st step pretightening		25 ± 2.5	2.5 ± 0.2
2nd step pretightening		9°±1°	
Gear fastening screw (to camshaft)	M10X1.25		
1st step pretightening		25 ± 2.5	25 ± 0.2
2nd step pretightening		15°±1°	
Alternator positive pole retaining nut	M8X1.25	12.5 ± 2.5	1.3 ± 0.3
Starter connector nut 30	M10X1.5	21 ± 3.4	2.1 ± 0.3
Starter connector nut 50	M5X0.8	3.6 ± 1	0.4 ± 0.1

TOOLS

TOOL NO.		Description
99322230		Rotary lifting platform
99340051		Crankshaft front oil seal removal
99340054		Crankshaft rear oil seal removal
99342149		Injector sleeve removal
99346245	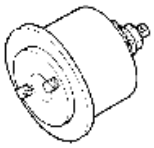	Crankshaft front oil seal assembling
99346260		Crankshaft rear oil seal assembling

TOOLS

TOOL NO.		**Description**
99360184	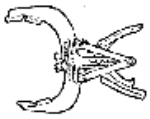	Removal and assembly of the piston ring (105-106 mm)
99360264		Removal and assembly of the valve split collet
99360288	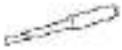	Valve guide removal
99360292		Assembly of the valve guide seat
99360294		Valve guide assembly (to use with 99360288)
99360334		cylinder liner protrusion measuring tool (to use with 99370415-99395603 and special press plate)

TOOLS

TOOL NO.		Description
99360335		Cylinder liner assembly tool (to use with 99360334)
99360341		Flywheel rotary tool
99360500	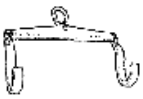	Crankshaft hook
99360505		Camshaft bearing removing and assembling tool
99360550		Rocker arm shaft removing and assembling tool
99360585		Engine hook

TOOLS

TOOL NO.		Description
99360605	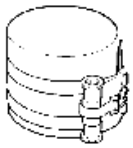	Piston assembly tool (60-125mm)
99360612		Engine TDC lock pin
99360613		Camshaft timing lock pin
99360703	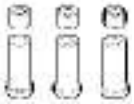	Cylinder liner press block
99360706		Cylinder liner removal tool (to use with the special cushion block)
99360724		Cylinder liner removal cushion block (135mm) (to use with 99360706)

TOOLS

TOOL NO.		Description
99361042		engine mounting support;
99365054		Injector sleeve removal tool
99368542		8-in-one wrench set (13-17-18-19-21-22-24-27-30 mm)
99370415		Cylinder protrusion measuring seat (to use with 99395603)
99389833		Torque wrench (20-120Nm)
99389834	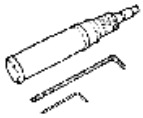	Injector harness fastening electronic screw driver(1-6Nm)

TOOLS

TOOL NO.		Description
99390310		Valve guide reamer
99390772		Injector sleeve residue remover
99390804		Injector sleeve removal tool
99394043		Injector sleeve grinder (to use with 99394045)
99394044		Injector sleeve grinder and bracket (to use with 99394045)
99394045		Guiding sleeve for the injector sleeve grinder (to use with 99394043 and 99394044)

TOOLS

TOOL NO.		Description
99395216		Angle tightener (1/2”and 3/4”)
99395221		Backlash regulator for camshaft gear and injector gear
99395222		Backlash regulator for camshaft gear and intermediate gear
99395223		Camshaft timing positioner
99395603		Dial gauge (0 - 5 mm)

Appendix

Safety regulations

Standard safety regulations

Particular caution should be taken in regards to the regulations, which must be observed in the standard workplace. Failure to follow these regulations may render other measures un-performable and may put the personal safety of the operators in danger.

- ❑ Understand and remind others of the current safety-related laws and regulations and provide information for reference.
- ❑ Always keep the workplace as clean as possible and make ensure proper ventilation.
- ❑ Make sure a first aid box is available in the workplace. The first aid box must be clearly marked and must be equipped with sufficient medical supplies.
- ❑ Adequate fire equipment should be provided. The fire equipment must be properly marked and be ready for use; check the validity of the equipment periodically. The operator must be properly trained. Organize and arrange a special exit for emergency withdrawal from the area. The emergency exit passage should be clearly marked.
- ❑ Smoking is prohibited in the workplace where there is potential fire hazard.
- ❑ Warning boards should be employed to provide necessary hazard warnings, prohibitions and instructions; make sure these are easy to understand even under emergency situations.

Injury precaution

- ❑ Clothing with dangling features is not permissible when working. Do not wear any jewelry when working near the engine and other running equipment.
- ❑ Wear suitable protective gloves and goggles when carrying out the following operations:
  - -When adding anti-oxidization agent or anti-freeze
  - -Topping off or changing lubricant
  - -When operating with compressed air or pressurized liquids (pressure permissible is less than 2 bar)
- ❑ Wear safety helmet when working in areas where heavy weight is suspended or equipment is running overhead.
- ❑ Wear safety shoes and tight-fit clothing that has elastic along the edge.
- ❑ Apply protective cream to the hands.
- ❑ Change wet clothing as soon as possible.
- ❑ If the voltage is higher than 48-60V, check the grounding and the connection efficiency of the electrical device. Keep the hands and feet dry, and operate with isolating foot pedal. Do not perform service you are not trained to do.
- ❑ Smoking or ignition is prohibited near the battery and any of the oily material.
- ❑ Dispose of cloth contaminated with oil, diesel, fuel or solvent in the special fire-resist container.
- ❑ Do not perform any interference operation in case of lacking necessary instructions
- ❑ Do not apply tools or equipment to processing other than their specified purpose, otherwise serious personal injury may occur.
- ❑ When the engine is running because it is necessary for an inspection or calibration service, ensure the ventilation of the area or discharge the exhaust gas with special vacuum equipment. Dangerous: Intoxication and death

During service

- ❑ Do not open the water filling cap of the cooling system before the engine cools down. Serious personal injury or burns may occur due to the working pressure and high temperature. Wait until the temperature drops to 50℃ or below.
- ❑ Do not top off coolant to the over-heated engine; use only suitable fluid.
- ❑ Perform only when the engine is stopped: If repair service must be carried out with engine running in a particular situation, be aware of all the possible potential hazards.
- ❑ Prepare enough safety containers to drain the engine fluids and waste oil.
- ❑ Keep the engine clean, the surface free from any oil, diesel, fuel and/or chemical solvent.
- ❑ Toxic vapors may be given off when applying solvent or cleanser during service. Make sure of the proper ventilation of the workplace. Wear a protective mask if necessary.
- ❑ Do not leave cloth contaminated by flammable substance near the engine.

- When first starting the engine after service, appropriate measures should be employed to stop the air intake when the speed is out of control.
- Do not use quick screw fastening tools.
- Do not disconnect the battery connection when the engine is running.
- Should the battery connection be disconnected prior to interference operation to the electrical system.
- Disconnect the battery connection from the system, load the battery with battery loader.
- After every interference operation, check the correct polarity of the battery clamp and that the clamp is free from accidental short-circuit and oxidization risks.
- Do not connect or disconnect the electrical connection in cases of feed existence.
- Check the pressure control of the fluids or air before removing pipelines (pneumatic, hydraulic and fuel pipelines). Necessary precaution measures should be adopted to bleed the residual pressure or close the relief valve. Always wear appropriate protective mask and goggles. Failure to follow the above-mentioned instructions may cause personal injury and intoxication.
- Avoid incorrect tightening force. Dangerous: Incorrect tightening may cause serious damage to the engine components, thus affecting the service life of the engine.
- Do not put oil into the copper-alloy, no-filter fuel tank and pipelines, or copper-alloy fuel tank with pipelines.
- Do not modify the wiring: Do not change the wiring length.
- Do not connect any power-consumption device to the engine's electrical equipment without prior authorization from SIH.
- Do not modify the fuel system or the hydraulic system without prior authorization from SIH. Any unauthorized modification may render the warranty invalid and affect the normal operation and service life of the engine.

For engines equipped with electronic transmissions:

- Do not carry out arc welding with the electronic transmission still installed.
- Remove the electronic transmission for interference operation requiring heating to high temperatures -- above 80℃.
- Do not spray paint the components and electrical connection.
- Do not modify any electronic transmission (drive engine) stored data. Tampering or modifying the electronic components may cause complete failure of the engine warranty service and affect the normal operation and service life of the engine.

Environmental protection

- Environmental protection has a very important influence: All necessary measures should be employed to protect personal safety and health.
- Understand and remind other persons of the current laws and regulations on usage and discharging of fluids and waste oil. Provide appropriate indication boards and organize special training to ensure full understanding of the legal provisions and precautionary safety measures of the involving personnel.
- Use suitable gas-tight special containers to collect waste oil. Make sure the waste oil is stored in the special container in the properly marked area. This area should be well ventilated, away from heat and fire risks.
- Dispose of the battery with care and store in an acid-proof container. The storage area should be well ventilated. Warning: Battery leakage may cause personal intoxication and environmental pollution.

Chapter 3

Clutch

Page number

Page number

Description

Clutch

Equipped with Fuller 12-gear gearbox produced by Shanxi Fast Gear Co., Ltd, adopts air-assisted hydraulic operation, includes clutch reservoir, master cylinder and clutch power cylinder.

Characteristics and Data

Diaphragm spring clutch				
	Type		Dry type single disc	
	Engagement mechanism		Pull type diaphragm spring	
	driven disc		Friction disc	
	Driven disc hub		With spring bumper	
	Out-diameter of friction disc Ø	Mm	420	430
	Inner-diameter of friction disc Ø	Mm	235	220
	Pressure Plate thickness (new model)	Mm	10 ± 0.3	10 ± 0.3
	Maximum off-centering quantity of the driven disc	Mm	-	~ 0.3
	The minimum load of the new pressure plate push rod	N	25000	25000
	Maximum load when released	N	5300	4750
	Minimum lift of the thrust pad	Mm	1.7	1.7
	Separating stroke	Mm	12^{+2}	12^{+2}
	Maximum consumption stroke	Mm	14	15
	Clutch control		Clutch cylinder with reservoir – power cylinder and driven disc	
	Type of fluid			

Common faults and diagnosis

Replace the thrust bearing

Major faults of the clutch system:

1 - Noise when the clutch pedal is depressed.
2 - Noise when the pedal is released
3 – Uneven engagement of the clutch
4 - The clutch can't be engaged
5 - The clutch slips
6 – Abnormal wear of the cultch driven disc

1 Noise when clutch pedal is depressed

Thrust bearing is excessively worn, damaged or has improper lubrication — Yes → Replace the thrust bearing

No ↓

Excessive play between the spline on the transmission input shaft and the related housing of the driven disc hub. — Yes → Replace the shaft and the driven disc if necessary.

2 Noise when the pedal is released

Springs of the driven disc broken or fatigue — Yes → Replace the driven disc.

No ↓

Transmission input shaft worn — Yes → Replace the shaft, and the driven disc if necessary

No ↓

Excessive end play between the thrust bearing and engaging sleeve — Yes → Replace the thrust bearing.

3 Uneven engagement of the clutch

Oil or grease on the engine flywheel or the driven disc friction plate — Yes → Clean the flywheel completely and then replace the driven disc

No ↓

Pressure plate distorted — Yes → Replace the clutch.

No ↓

Uneven wear of friction linings due to wear-out of driven plate — Yes → Replace the driven disc.

No ↓

Diaphragm spring fatigue or broken fingers — Yes → Replace the driven disc.

4 The clutch can't be released

Oil or grease on the driven disc lining. — Yes → Replace the driven disc.

No ↓

Transmission input spline damaged, preventing driven plate from sliding — Yes → Replace the shaft and the driven disc if necessary

No ↓

Air in the hydraulic pipelines — Yes → Bleed the circuit.

The clutch slips		
Driven plate linings worn or burnt	Yes	Replace the driven disc.
	No	
Diaphragm spring fatigue or broken fingers	Yes	Replace the clutch.
	No	
Oil or grease on the driven disc lining.	Yes	Solve problems causing contamination and replace the driven disc
Abnormal wear of the driven disc friction disc		
The driver puts his/her foot on the clutch pedal when driving the vehicle, which leaves the clutch in a semi-engaged state.	Yes	The driver should get over the improper habit and rest his/her foot on the clutch pedal only when necessary
	No	
Braking disc ring strained	Yes	Replace the braking disc ring.
	No	
Diaphragm spring fatigue or broken fingers	Yes	Replace the clutch.
	No	
Insufficient stroke of the clutch master cylinder	Yes	Check and adjust the no-load stroke of the master cylinder.

Tightening Torque

Description	Torque Nm	Torque (kgm)
Flanged hex screw M12 fixing the pressure plate to flywheel	65 ± 7	(6.5 ± 0.7)
Nut for stud bolt M10 fixing the clutch cover to the flywheel housing	46 ± 5	(4.6 ± 0.5)

TOOLS

TOOL No.		Description
99306010		Tool to bleed the hydraulic clutch pipeline
99348004		Universal puller, inner diameter from 5 to 70 mm
99370264		Clutch disc pilot pin
99370280		Clutch disc pilot pin
99370547		Bracket used to remove and reinstall the clutch ASSY. (installed onto the hydraulic jack)

505210 Removal and reinstallation of the clutch

Removal

This operation includes:

- Removal and reinstallation of the propeller shafts (refer to the relevant section of 505620).
- Removal and reinstallation of the transmission (refer to the relevant section of 530210).

Figure 1

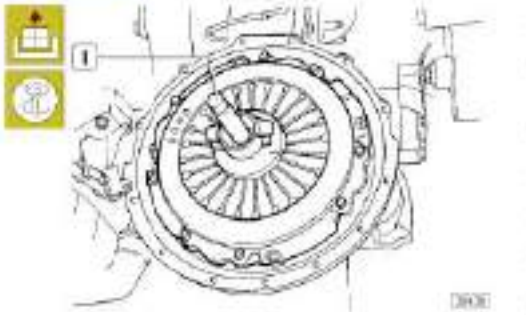

Insert the clutch positioning pin into the positioning bearing on the clutch release bearing connecting the release bearing to the flywheel.

Figure 2

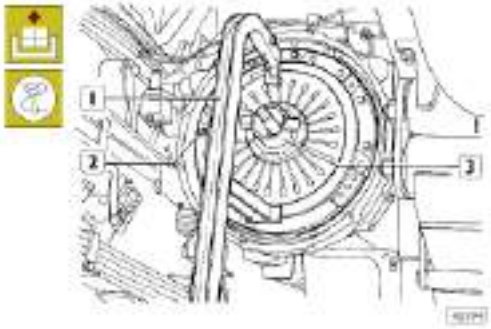

Install Tool 99370547 (1) onto the hydraulic jack and fix to the pressure plate (3).Loosen the clutch screws (2) and remove the pressure plate from the engine flywheel.

Figure 3

Remove the clutch disc (2) when removing the positioning pin 99370264 or 99370280 (1).

Inspection

Carry out check and inspections of the following:

- Surface of the driven disc support, located on the engine flywheel, should not be worn or have too many scratches.
- The toothed ring of the engine flywheel should not be worn severely.

If these two conditions exist, disassemble the engine flywheel (operation540850).

In addition, check the crank rear oil seal, it should be free from any leakage: If not, disassemble the flywheel as stipulated in the relevant section. Remove the rear cover and the oil seal and replace as described in section 2.

Check if the positioning bearing or bushing of the flywheel is worn or damaged and change it if necessary.

Check the state of the pressure plate. The friction surface of the driven disc should not be worn or over heat and its spring and diaphragm must be sound.

Check the state of the driven disc:

- The friction lining should not be over-worn or overheat, nor be contaminated by oil or grease.
- There shouldn't be excessive play of the gear hub on the input shaft of the transmission.
- The torsion springs of the gear hub should be unable to turn in the seat or be broken.

If any problem is found, please change the corresponding part.

In this situation, only fully identical new parts are allowed to be installed.

Figure 4

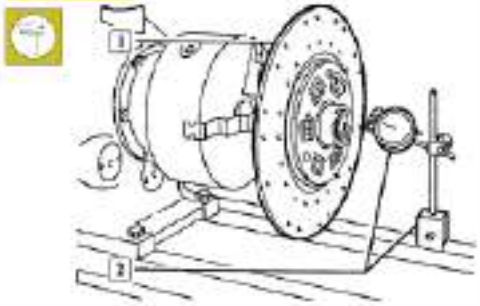

Before installing a new driven disc, the following inspection must be performed to check its coaxiality: Set the driven disc (1) on the lathe. Then, with the aid of a dial gauge and a magnetic base (2), check if there are any abnormalities on the surface of the disc.
The maximum permissible abnormality of the driven disc is 0.20 mm.

Figure 5

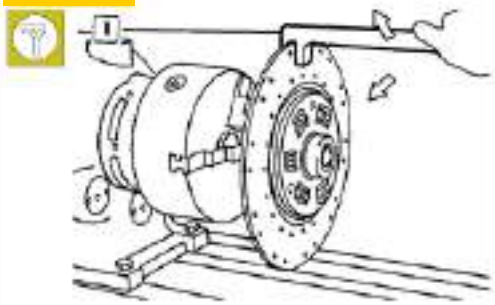

If the disc is of abnormal, use a fork wrench (1) as shown in the figure.

Reinstallation

For assembling the clutch ASSY, please reverse the steps of disassembling and take the following instructions:

- Thoroughly clean the supporting surface of the engine flywheel to the clutch disc with ethanol or petrol. Remove all visible slight scratches with emery cloth.
- When installing driven disc, always use positioning pin for accurate centering to prevent harmful stress on the hub when reinstalling the gearbox.
- Align to the fixed screw bore of the flywheel and install the clutch disc.
- Fix and tighten the retaining screw of pressure plate to the required torque.
- Apply molybdenum disulfide grease to the splined shaft and reinstall back into the gearbox.
- Adjust the push rod of the master cylinder as described under the relevant headline (Operation 505272).

505254 Removal and reinstallation of the thrust bearing

Figure 6

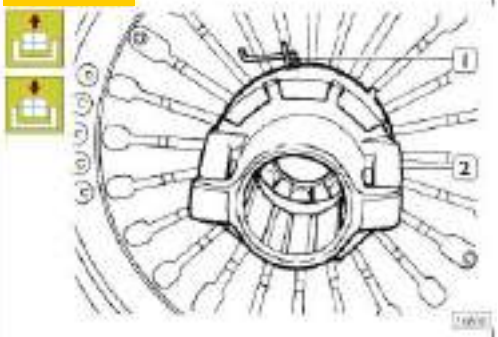

This operation includes:

- For removal and reinstallation of propeller shaft refer to relevant section 505620.
- For removal and reinstallation of gearbox refer to relevant section 530210.

Open the snap ring (1) with suitable pliers and take the release bearing (2) out of the pressure plate.

Reverse these steps for reinstallation.

Note: The new parts installed should be fully identical because the pressure plate is reusable.

540852 Replace the positioning bearing of flywheel

Figure 7

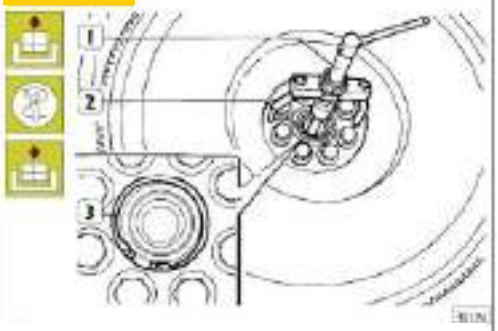

This operation includes:

- For removal and reinstallation of propeller shafts refer to relevant section 505620.
- For removal and reinstallation of gearbox (Refer to relevant section 530210).
- Disassemble and Assemble of the Clutch (Operation 505210).

Use the appropriate pliers to remove the C type split ring (3).

Remove the bearing (2) with the universal extractor 99348004 (1)

Please use appropriate tapper when reinstalling.

502601 Removal and reinstallation of the clutch pedal

Removal

Figure 16

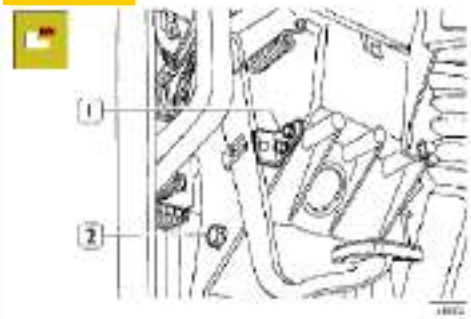

Remove the bracket (1) stopping the clutch pedal. Take out the screws (2) fixing the master cylinder to the pedal unit.

Figure 17

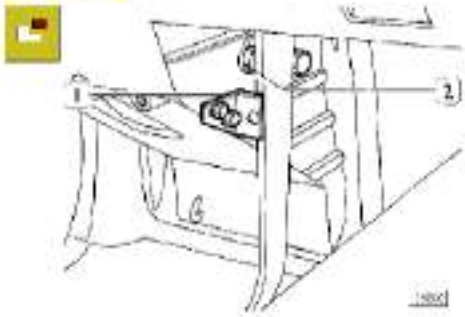

Remove the bracket (1) and stop the brake pedal. Unscrew the three bolts (2) used to fix the control valve to the pedal unit.

Figure 18

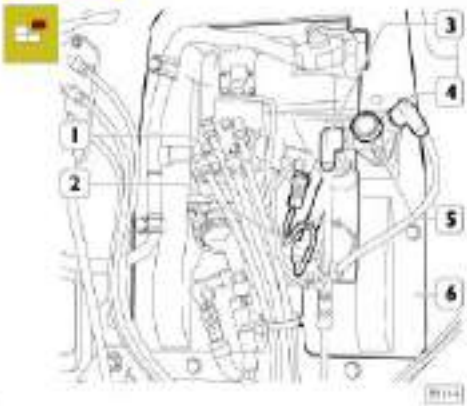

Pull up the radiator cowling and disconnect the piping (3-4) from the splitter control button (5).Disconnect the electrical connection (1) of the master cylinder (2) then remove and remove the reservoir from the pedal unit as well. Disconnection of the pedal unit (6) as described in Fig. 13-14 - 15.

Reinstallation

Figure 19

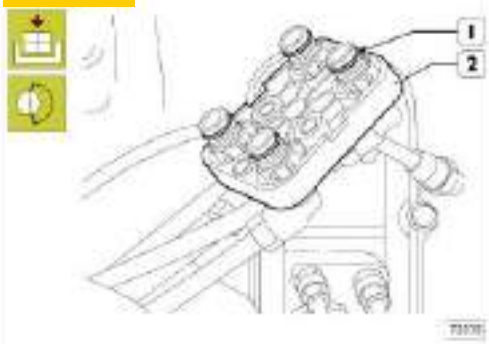

For reinstallation, carry out the above steps in reverse order. Adjust the travel of the pedals as described under the relevant headline.

Note: for every disassembling, the sealing parts (1) of the protector (2) connector on the control valve should be renewed.

Tighten the screws and nuts to the required torque. Check after reinstallation and adjust the travel of the pedal as described under the relevant headline.

Pedal

Unit removal and assembly

(refer to Fig 20)

Remove spring (11) to release pedal (13*-15) return. Eject the spring pins (7) to up-release the levers (1* and 2) from the pedal (13* and 15), then extract the pedal from the pedal unit seat (18). To replace the roller bearings (9), use:

⑥ Tapping type extractor 99340205 to remove them;

Note: The roller bearings and associated shafts must be lubricated with TUTELA MR3 grease.
Complete assembly by performing steps of removal in reverse order.

Figure 20

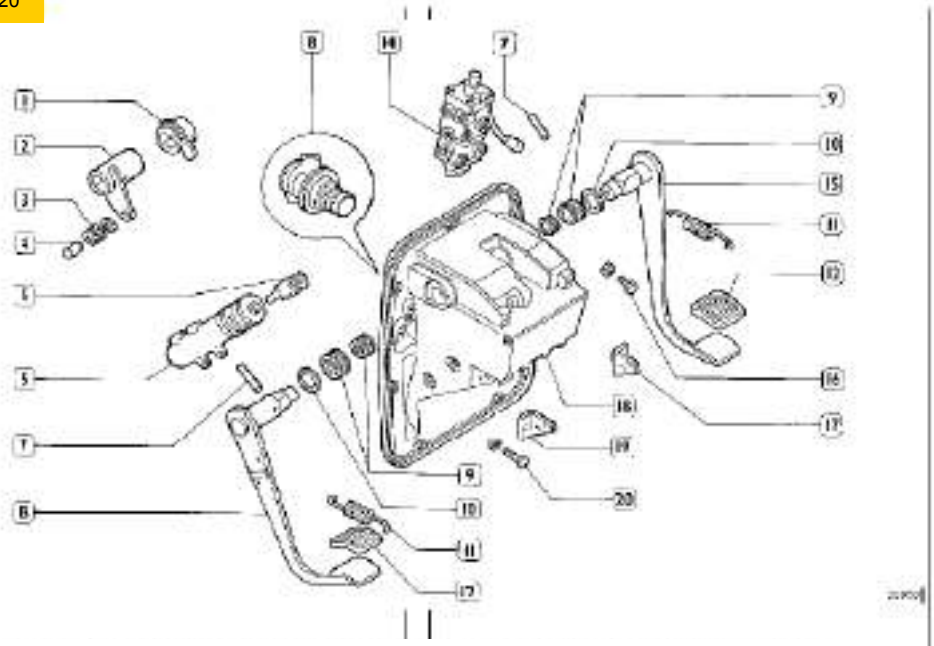

1. Brake control lever 2. Clutch control lever* 3. Roller bearing -4. Pin 5. Extracting yoke, 6.braking master cylinder* 7. Spring pin, 8. release control button*, 9. roller bearing, 10. washer, 11. return spring, 12. pedal cover, 13. clutch pedal, 14. control valve, 15. brake pedal, 16. brake pedal stop screw, 17. brake pedal stop mount, 18. pedal unit seat,

* Vehicle equipped with EuroTronic gearbox exclusive.

Hydraulic Control

The hydraulic control system is composed of:

- Clutch master cylinder with reservoir ASSY.
- Free stroke automatically adjusted clutch power cylinder

Clutch master cylinder

Figure 22

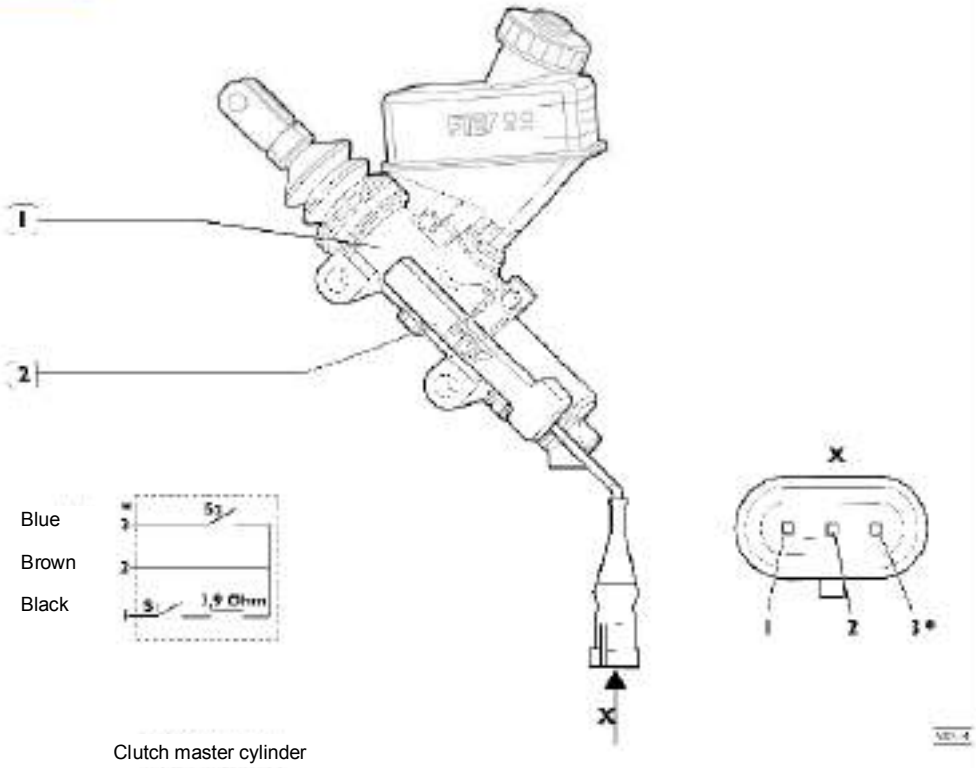

Clutch master cylinder

A signal switch is installed in the clutch master cylinder.

- Cruise Control
- Engine brake control

Features		S1	S2
Voltage	V	48 max	
Current:			
Min	mA	5	5
Max	mA	400	700
Power	W	10 max	20 max

Sectional elevation of the clutch power cylinder

Note: Should any oil leak from the master cylinder and/or the clutch actuator be detected, replace the involved component and drain the hydraulic system.

505272 Push rod adjustment

Push rod adjustment (new clutch)

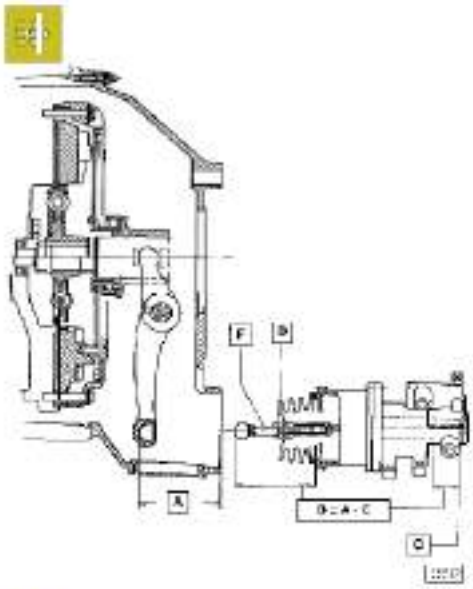

Carry out the following operations:
Measure the distance (A) between the bottom of the spherical cavity of the clutch lever and the actuator mounting surface. Press the spherical push rod to reach the stop (C).
Loosen the nut (D).
Tight or loosen the push rod (F) to obtain the distance (B).

B= A — E

E=30 mm

Note: Observe the adjustment carefully or the friction linings will be totally worn out.
When releasing the clutch, the driven disc wear (90% of the friction material) will be shown by a significant increase in load on the pedal.

Bleeding clutch pipeline

Figure 28

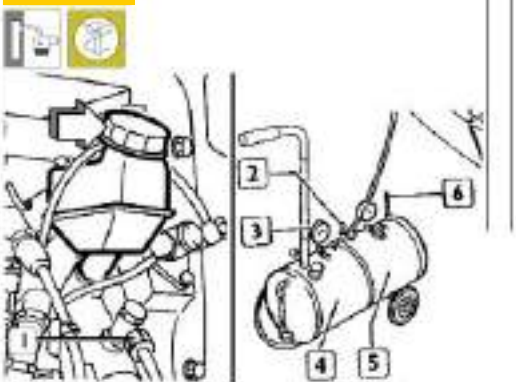

Bleed the clutch hydraulic pipeline after repairing the clutch assembly or a periodic change of oil and fluids. Use air bleeding tool 99306010 as follows:

- ⑥ Lead the compressed air into reservoir (5);
- ⑥ Fill the reservoir (4) with brake fluid
- ⑥ Replace clutch reservoir cap with one of those provided by tool 99306010 （⇒） and connect the tool piping to the cap.

Figure 29

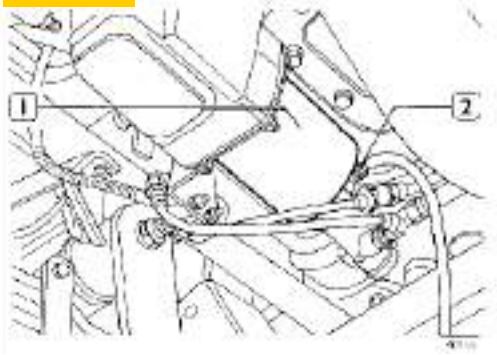

- ⑥ Connect a plastic pipe to the bleed screw (2) of the power cylinder (1) and immerse the other end of the pipe into a container filled with brake fluid. Turn the bleed screw (1) one full turn, open (refer to Fig 28) reservoir (2) until pressure gauge (3) shows a reading of 1～1.2 bars;
- ⑥ When the clutch fluid in the pipeline is free of bubbles, tighten the bleed screw and bleed reservoir (5) through the valve (6).

Note: When the clutch fluid is changed, loosen the retaining connector before bleeding the clutch servo and bleed the master cylinder (1, Figure 28).

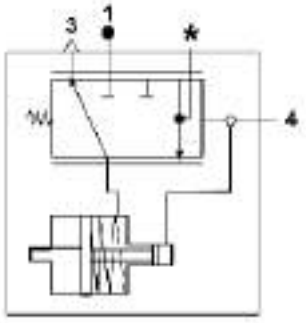

Functional diagram

1. Feed (compressed air)
3. Bleed (compressed air)

Service pressure:

⑥ Clutch fluid (P4)	40	bar
⑥ Air (P1)	11.5	bar

Max pressure:

⑥ Clutch fluid (P4)	120	bar
⑥ Air (P1)	13	bar

Chapter 4

22 Propeller shaft

Page number

Specifications and Data

Figure 1

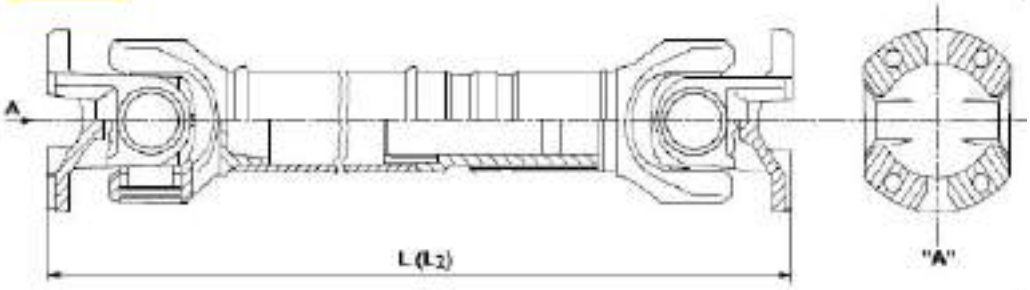

Extension-type propeller shaft

Figure 2

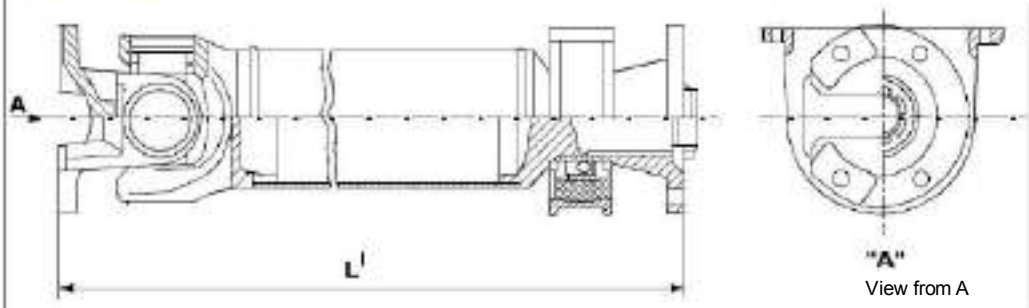

View from A

Propeller shaft with rubber support

The working angle of the universal joint: 25°

View from A

Specification and Data

Description	mm
(Radial) Clearance of the plug and socket Assy.	0.03
Maximum deviation of propeller shaft	
❑ Measured in the middle	0.4
❑ Measured at the top	0.25
❑ Measured at the shank	0.15

Fault diagnosis

Major faults of propeller shaft:

1 – Driving noise and vibration

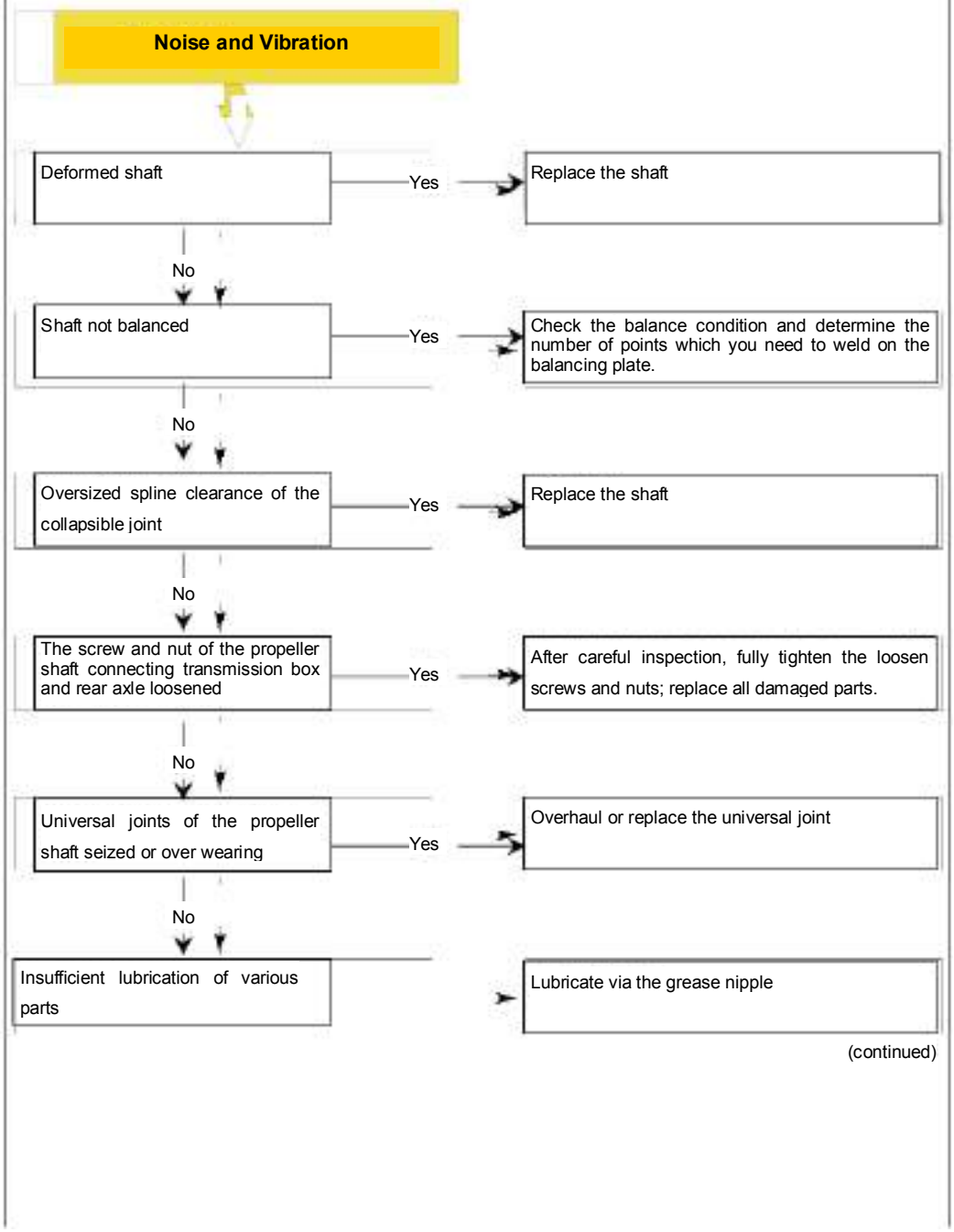

(continued)

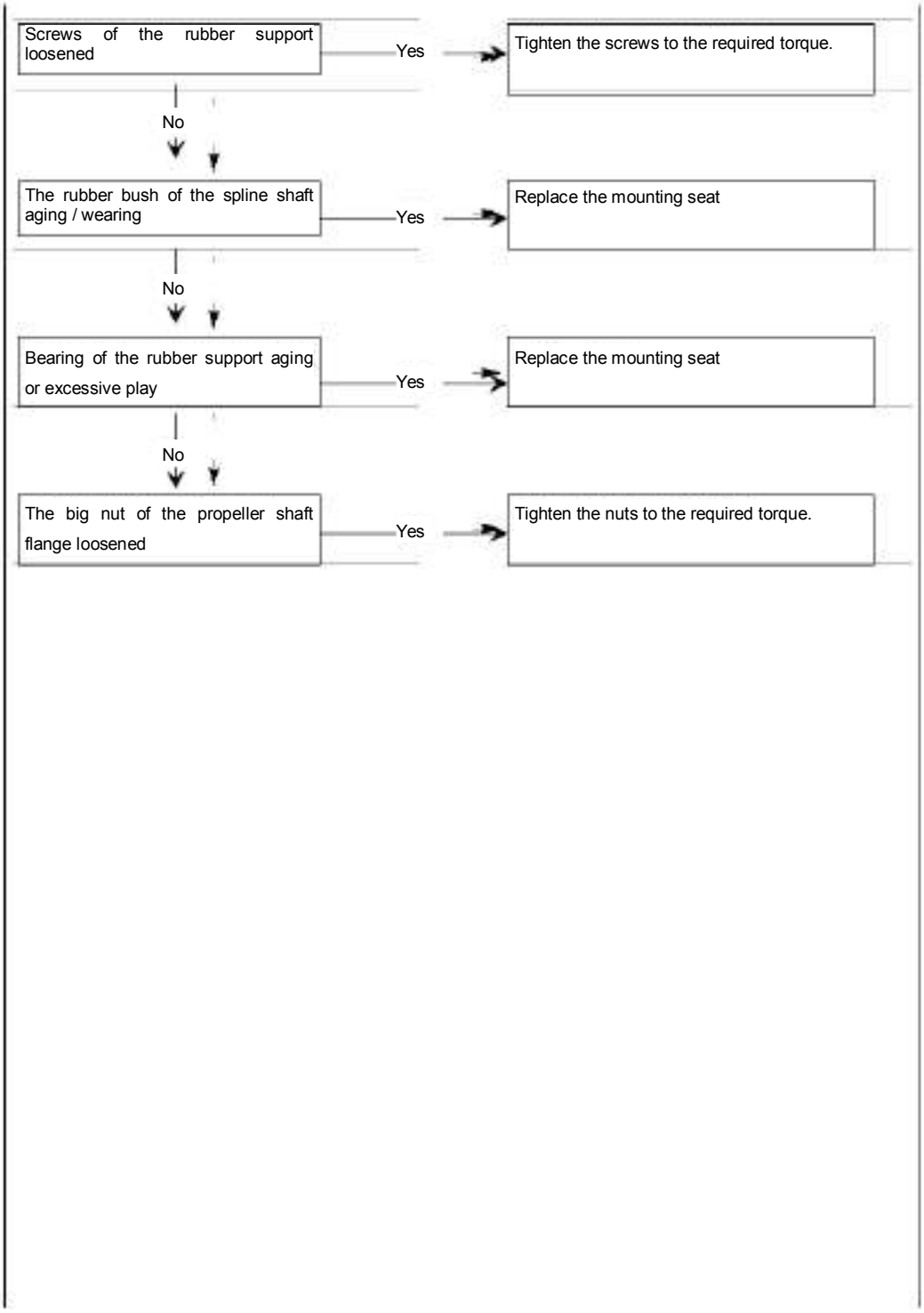

TIGHTENING TORQUE

Description	torque	
	Nm	kgm
The big nut of the propeller shaft flange: M 40x1.5 M 55x1.5	 350 + 50 380 + 70	 35 + 5 38 + 7
Nuts used to fix the propeller shaft flange: M 20 X 160	450 ± 34	45 ± 3.4
Nuts used to fix the propeller shaft flange	133.5 ± 13.5	13.3 ± 1.3
Nuts used to fix the spring mounting seat to frame M12 screws	92 ± 9	9.2 ± 1
Nuts used to fix the spring mounting seat to frame M14 screws	146.5 ± 14.5	14.6 ± 1.4

TOOLS

TOOL No.	Description
99370618	To mount – remove the seat of propeller shaft

505620 Removal and reinstallation of propeller shaft

Removal

Figure 3

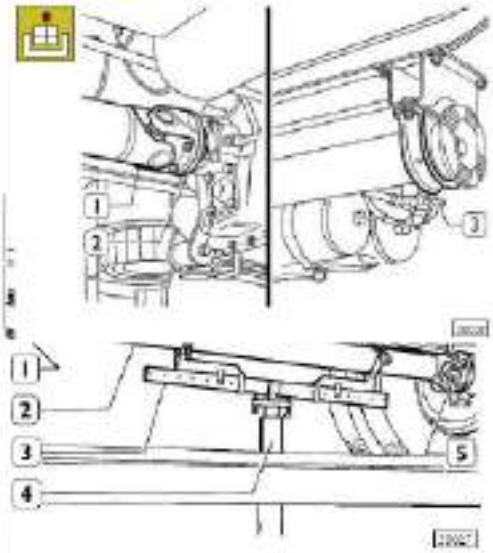

Place the hydraulic jack (4) with special tool 99370618 (3) under the rear propeller shaft (2).
Loosen nuts (1 and 5) used to tighten the propeller shaft, remove the propeller shaft (2) from the rear axle and spring mounting seat
Lower the hydraulic jack completely until separate from the propeller shaft.

Removal and reinstallation instructions for the vehicle propeller shaft will be given in two sections.

Figure 4

Repeat the procedure to remove the front propeller shaft (1): Separate it from the transmission flange (2), and remove rubber support (3) by the same methods.

Reinstallation

When reinstalling, reverse the steps and note the following:

- The self-locking nuts have to be replaced every time and tightened to the required torque.

505620 Repair

Remove the universal joint

Figure 5

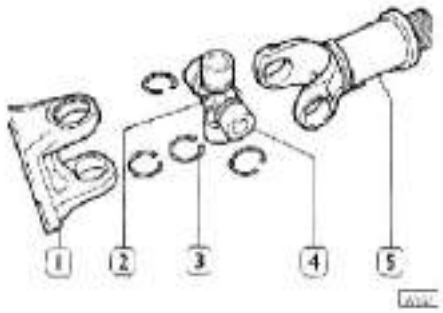

Components of the universal joint

1. Flange york – 2. Spider – 3. Clip – 4. Bearing – 5. Universal joint

Figure 6

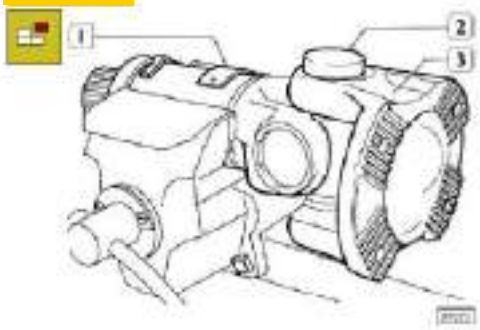

Put the universal joint assembly (1) in a vice.

Take down the clip (3, Fig 3) by a clip claw.

Tap on the flange yoke (3, Fig 4) with a mallet or brass bar until the bearing (2) is tapped out of the seat, that is, the spider contacts with the flange yoke.

Turn the part over and repeat the above operation.

Take one of the two bearings (2) out by hand.

Take down flange yoke (3) and pull out the other bearing.

By the same procedure, extract the bearing from the universal joint

Installation of the universal joint head

Plug the flange yoke into the yoke bushing of the universal joint.

Together install the bearing and roller, mount the bearing with

Figure 7

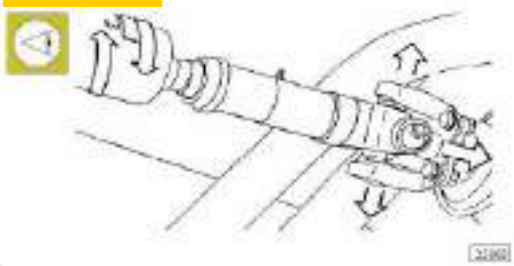

Inspect the propeller shaft on-vehicle

The original propeller shafts are statically and dynamically balanced prior to the ex-factory.

The welded plate on the propeller shaft is used to adjust the balance.

If there is no plate, it is necessary to balance the shaft once again.

When inspecting the shaft, check the spline clearance excessive of the sliding sleeve (in the arrow rotating direction).

When inspecting the universal joint, check from the arrow direction the wear-out of the joint; if it's worn, replace it as described above.

Table

Front axle

Description

Solid forging H beam, fist type, cam air brake

Figure 1

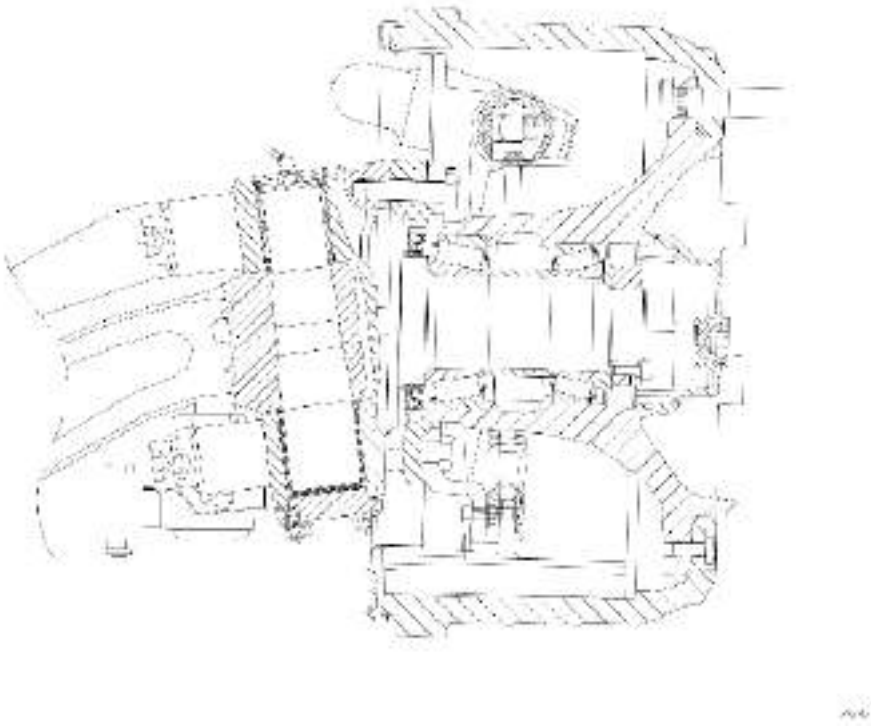

Axle section

Specification and Data

	Type of axle	Front axle	
	Steering knuckle		
	Clearance between axle and steering knuckle upper washer X1	0.05 —0.10 mm	
	Washer thickness specification	2，2.1，2.2，2.3，2.4，2.5，2.6，2.7，2.8，2.9，3.0，3.1，3.2，3.3，3.4 Mm	
	Wheel hub bearing	2, cone type roller bearing	
	Grease for wheel hub bearing	Lithium grease	
	Kingpin off-set angle	3°	
	Wheel caster angle	1°	
	Kingpin camber angle	2°	
	Wheel toe-in	4x2 6x4 model	8x4 Models
	Bias tire mm	2-4	2-4
	Radial tire mm	0-2	0-2
	Front wheel max turn angle	4x2 6x4 Models	8x4 Models
	Inner/outer degree	40/32	First front axle 28/32.9 Second front axle 33/41.5
	Weight of axle (steel wheels and tires exclusive) kg	450—470	
	Rated load capacity kg	6000—6500—7000—8000—9000	

Fault diagnosis

Major front axle functional faults:

1- Hard steering
2 - Wobbling
3- Noise

1 Heavy steering or hard steering

Incorrect toe-in	Yes →	Make accurate toe-in adjustment on front wheels
No ↓		
Uneven tire pressure	Yes →	Inflate tires to required pressure
No ↓		
Steering lever parts adjustment too tight	Yes →	Re-adjustment
No ↓		
Ball joint adjustment too tight	Yes →	Re-adjustment
No ↓		
Steering position-limit screw loose or bent	Yes →	Tighten or change steering location-limit screw
No ↓		
Kingpin bushing worn	Yes →	Change kingpin bushing

2 Wobbling

Loosened nuts of the steering lever parts	Yes	Redo the pre-tightening operation
No		
Excessive wear of the tie rod end	Yes	Change the ball pin
No		
Steering clearance of the steering joint too big	Yes	Re-perform the adjustment or change the damping bearing
No		
Insufficient tightened front wheel hub bearing	Yes	Re-adjust the pre-tightening force of the bearing
No		
Excessive wear of the kingpin bushing	Yes	Change kingpin bushing
No		
Uneven mating of the friction disc and brake shoe or too big a difference in the mating areas on the left and right	Yes	Change the brake shoe ASSY
No		
The brake hub out of roundness	Yes	Carry out boring again, and verify the roundness of 0.35mm

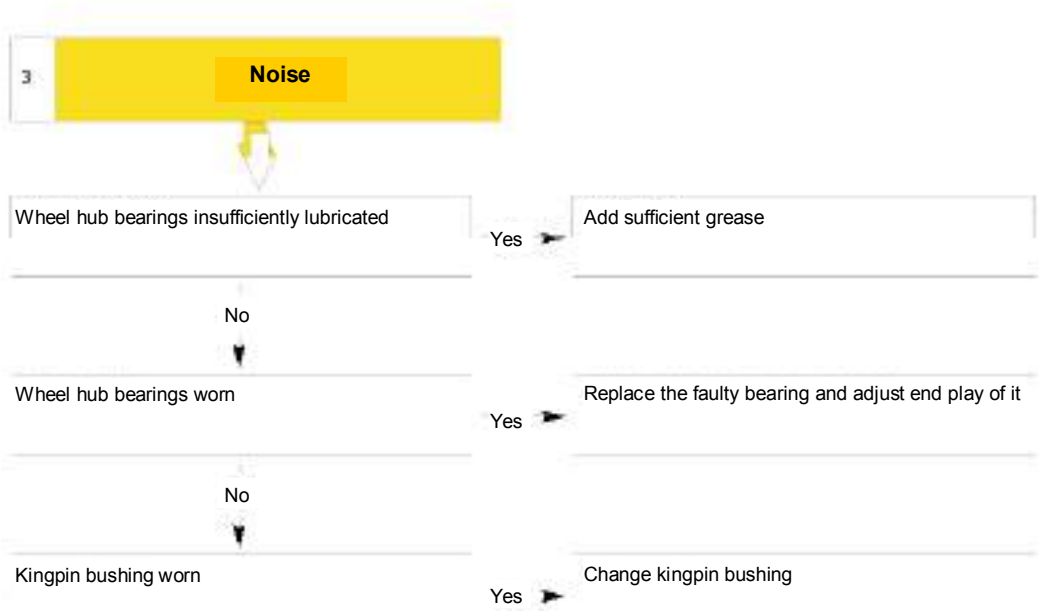

Figure 2

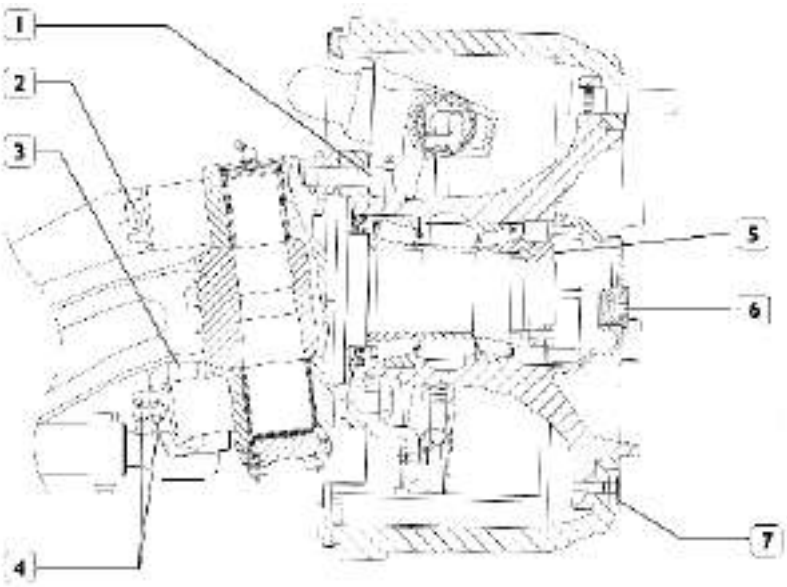

Wheel side front axle section

Tightening Torque

	Description	torque	
		Nm	kgm
1	Screw to secure the brake holding plate to the steering knuckle	23	2.3
2	Tighten the nuts on the steering knuckle arm	275—335	27.5—33.5
3	Fillister nut to secure the knot pin joint	265—325	26.5—32.5
4	Screw to secure the tie rod arm to the steering knuckle	265—325	26.5—32.5
5	Hexagon slotted and castle *nuts used to tighten the wheel bearing*	450	45
6	Screws to secure the cover and front wheel hub	23	2.3
7	Cross slotted and castle screwed to secure the brake hub to the front wheel hub		

Figure 3

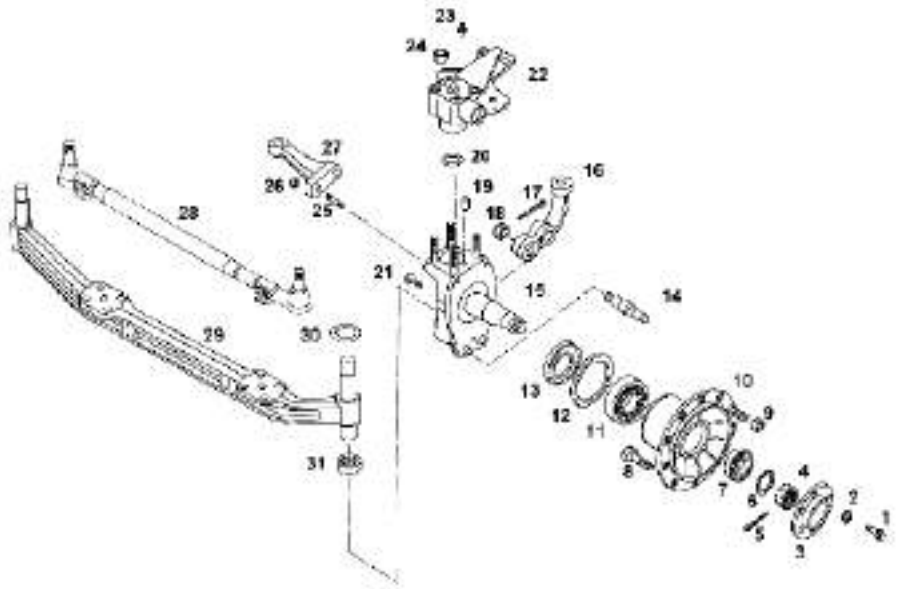

1. hexagon headed bolt 2. spring washer 3. cover 4. hexagon slotted nut 5. cotter pin 6. washer 7. single-row cone-type roller bearing 8. wheel bolt 9. wheel nut 10. front wheel drum ASSY 11. single-row cone-type roller bearing 12. seal 13. caulking ring 14. brake shoe supporting pin 15. steering joint ASSY 16. steering tie rod arm 17. cotter pin 18. hexagon clotted flat nut 19. cylindrical pin 20. O sealing ring 21. adjusting screw 22.mount ASSY 23. metric cone thread nipple 24. self-locking nut 25. stud bolt 26. self-locking nut 27. steering knuckle am28. steering tie rod 29. front axle sub-ASSY 30. adjusting washer 31. damping bearing

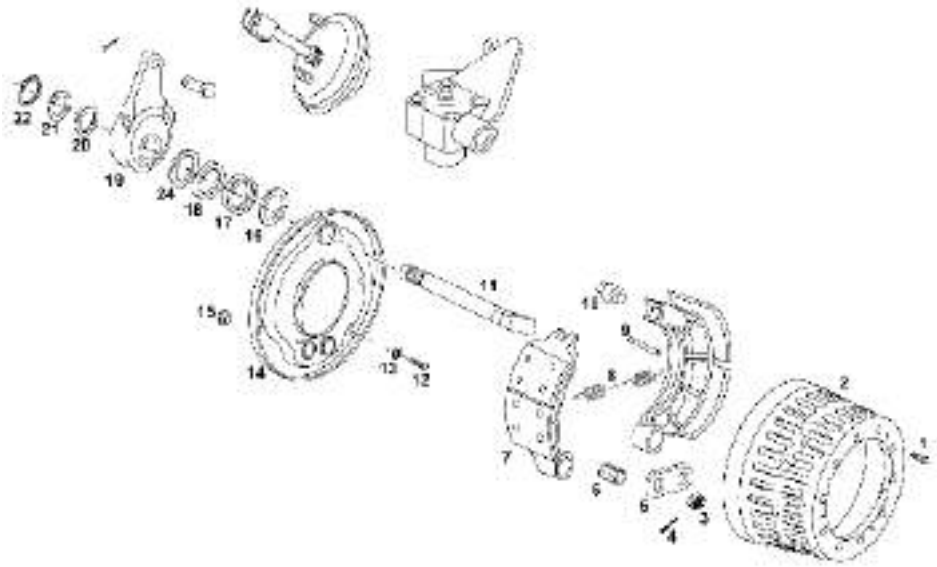

1. Cross slotted countersunk screw 2. brake drum 3. hexagon slotted flat nut 4. cotter pin 5. location-limited plate 6.

bushing 7. brake shoe ASSY 8. return spring 9. return spring pin 10. roller 11. brake camshaft 12. hexagon-headed bolt 13. spring washer 14. dust cover ASSY 15. sealing ring 16. auxiliary washer 17. O type sealing ring 18. sleeve 19. clearance adjustment arm 20. washer 21. adjustment washer 22. spring stop ring for axle

Removal and installation of the axle

Removal

Figure 4

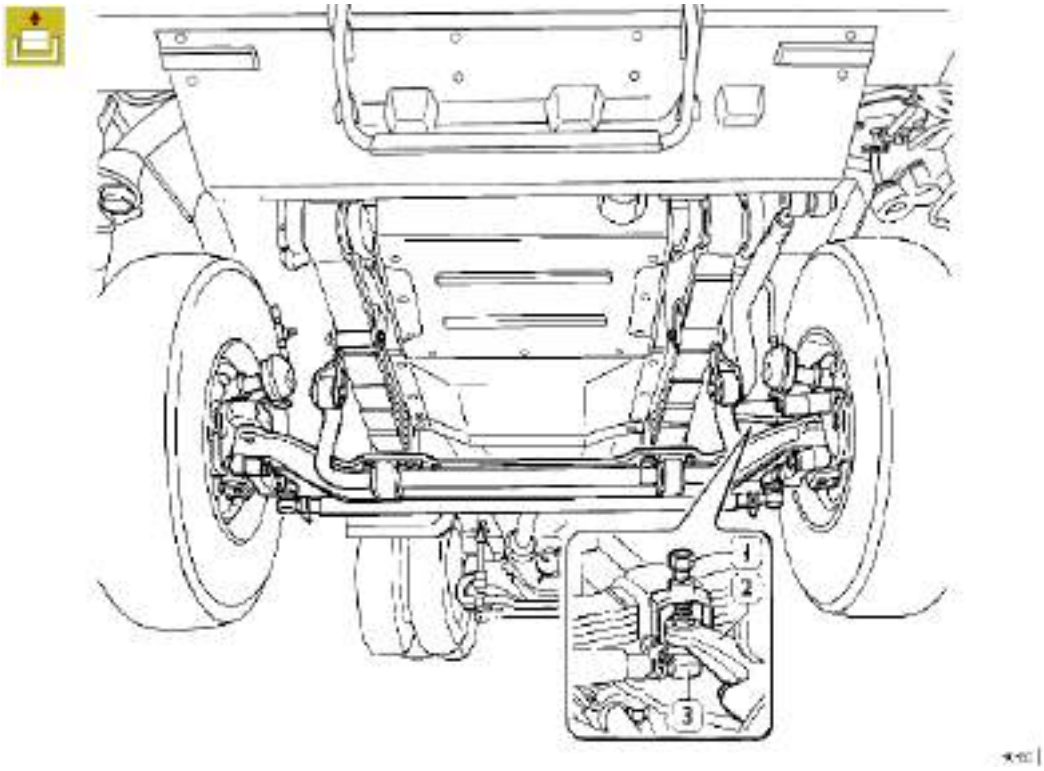

Park the vehicle on flat ground and lock the rear wheels.

Loosen the front wheel fastening nuts.

Use a hydraulic jack to lift the front of the vehicle and rest it on two stands.

Remove the wheel nuts and remove the wheel.

Remove the tie-rod (3) king pin on the arm (2) by puller 99347068 (1).

Disconnect:

- Disconnect the air delivery hoses from diaphragm type brake cylinder;
- ABS transmitter electrical cable;

Figure 5

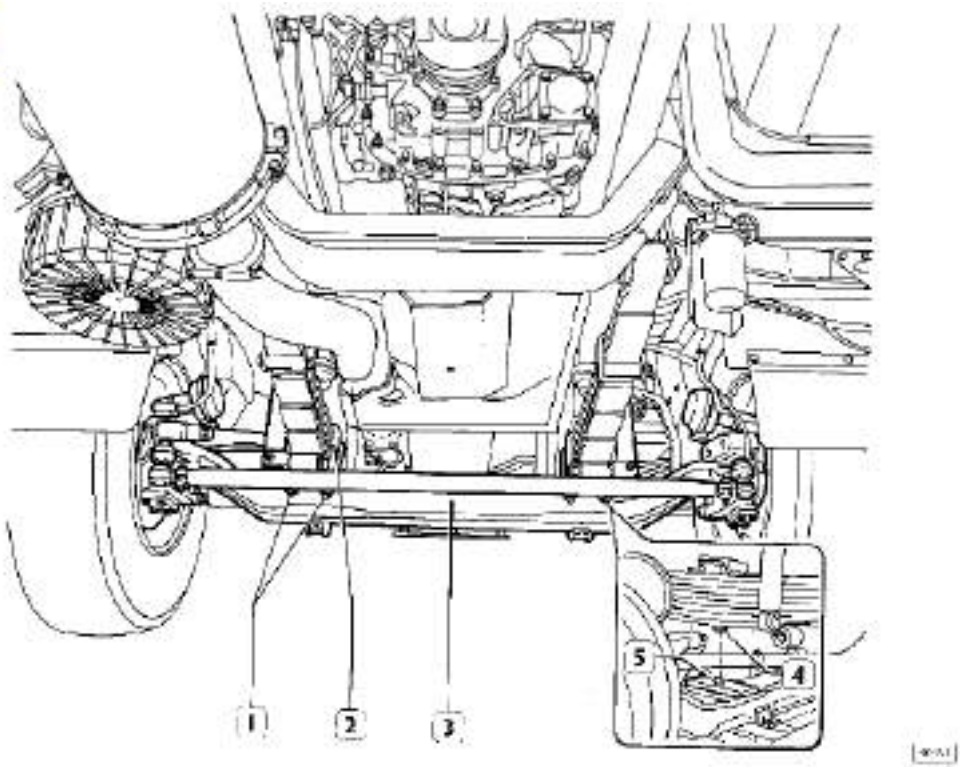

Set a hydraulic jack with support stand 99370628 under the axle (3).

Loosen nut (1), and take down the U bolt (2).Remove the down shock absorber bracket.

Lower the hydraulic jack and remove the axle (3).

Installation

To reinstall, follow the removal instructions in reverse order.

Vehicle Inspection

Kingpin

Clean the tie rod and cross rod kingpins. Check the kingpin components to find if they are strained or broken. If they are, replace them.

Tie rod

Check the clamp screws and nuts. Make sure they are not worn and are tightened to the specified torques. Check for distortion or damage and change them if necessary.

Front Axle Assembly Overhaul

Figure 6

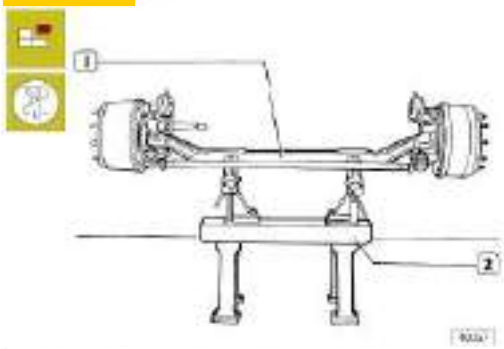

Lift the axle assembly (1) on stand 99322215 (2) using lifting equipment and secure it for overhaul.

Figure 8

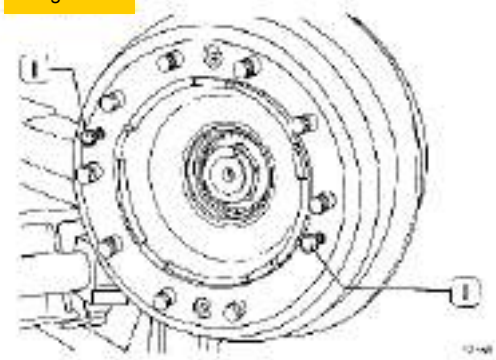

Insert two screws (1) in the brake drum.

Progressively tighten until the drum is separated from the wheel hub.

Removal and installation of the wheel hub

Removal

Figure 7

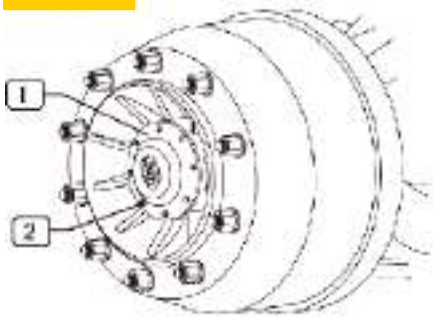

Loosen screw (2) and spring washer, remove cover (1).

Figure 9

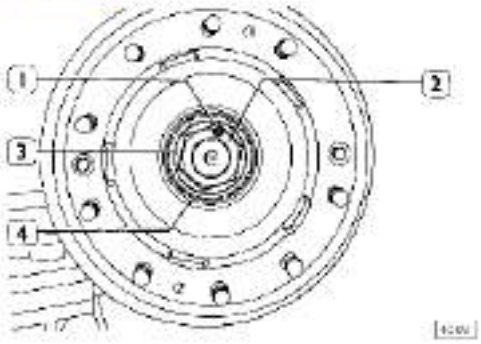

Take out the cotter pin (1), remove the hexagon slotted nut (2) and washer (3) using tools, and pull out the external bearing (4), wheel hub, internal bearing and space ring with a universal puller.

Change the sealing ring and bearing

Figure 10

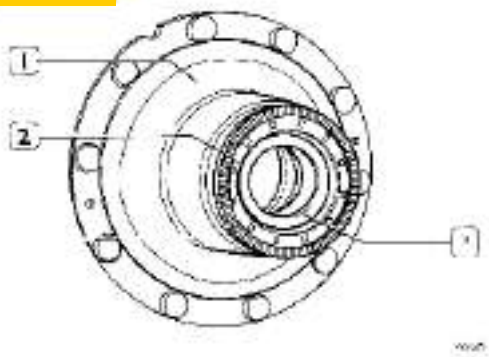

Remove the sealing ring (2) from the hub (1) by a puncher

Push out the bearing outer ring (3) at the two sides of the front wheel hub by the puncher

Note: Check the hub surface to find if there are dents.

Figure 11

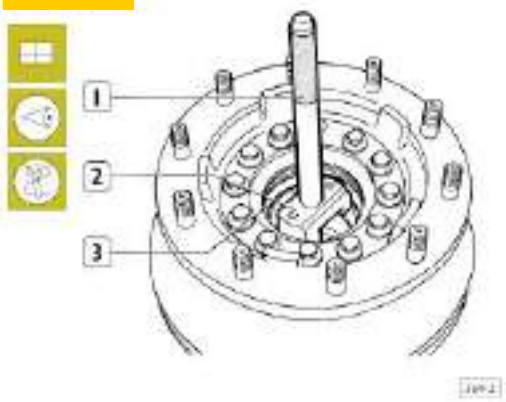

Clean the bearing and apply oil on its outer ring Calibrate the outer ring and press it into the small hole of the front wheel. Turn over the front wheel hub and press bearing outer ring into the other side by the same method

Figure 12

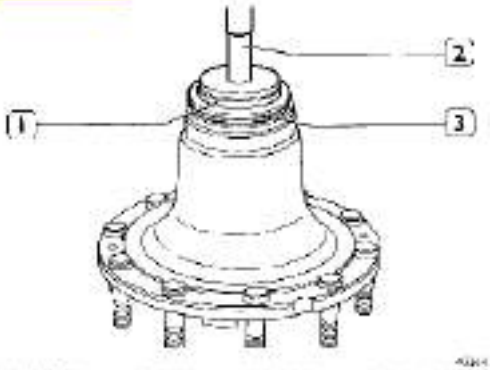

Install the sealing ring (3) with the tapper (1) and hand shank (2) Apply vehicle universal lithium grease to the lips of the bearing outer ring and the sealing ring on the two sides of the front wheel hub.

Change the wheel bolts

Figure 13

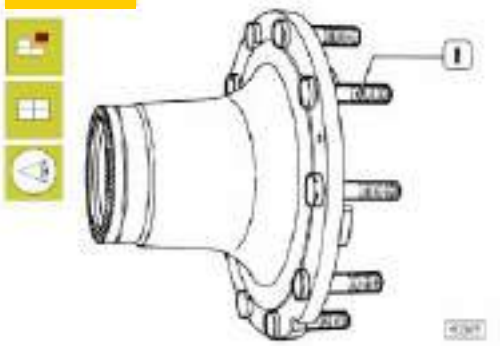

Take out the bolt (1) with a pressing jig Make sue the contact surface of the bolt head on the front wheel hub is free of burrs. Fix the bolt with care; the machined edge of the bolt should be placed right of the hub center, press into place.

Installation of the hub

Note: Make sure that the surfaces of all the parts inside the wheel hub are perfectly clean without any burrs.

Figure 14

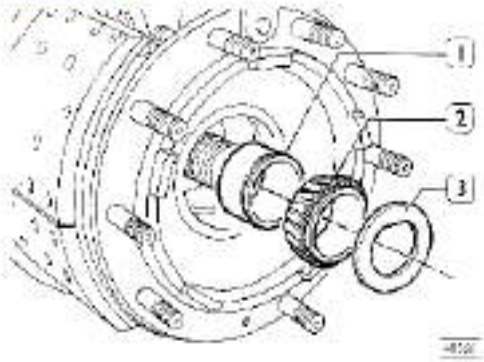

Heat the space ring (1) to 100℃ and install on the steering knuckle with a punching tool, heat the inner ring of the cone roller bearing to 100℃ and fix it outside the space ring. Mount the front wheel hub ASSY to the journal of the steering knuckle. Then install the outer bearing (2) and washer (3).

Adjust the pre-tightening force of the wheel hub bearing.

Figure 15

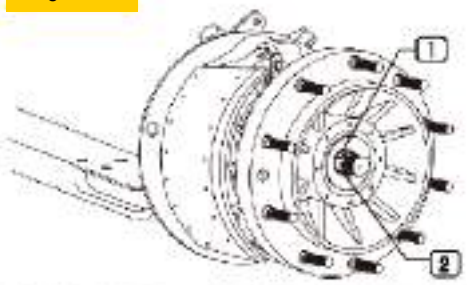

Tighten the hexagon slotted flat nut (1) onto the journal thread of the steering knuckle: the tightening torque is 450N.M, to install the bearing in place, vibrate the front wheel hub with a brass bar. The front wheel hub can't be rotated by hand, or it will be very difficult to turn. Loosen the hexagon slotted flat nut to about 120° . The hexagon slotted flat nut be aligned to the cotter pin hole. Vibrate the front wheel hub with a brass bar; the wheel hub should rotate smoothly, there should be no seized situation and the washer should not loosen. Fix the cotter pin (2) and lock.

Figure 16

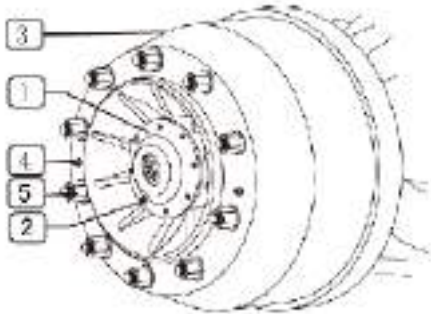

Wipe clean the small flat surface of the front wheel hub, apply sealant to the surface inner of the thread hole, fix cover (1), spring washer and hexagon bolt (2).Tighten the hexagon bolt, the tightening torque is 23N.M.Install the brake hub (3) to the front wheel hub and tighten in place with two Cross slotted and castle screws (4).Fix the wheel nut (5) and tighten.

Removal and install the steering knuckle arm

Figure 17

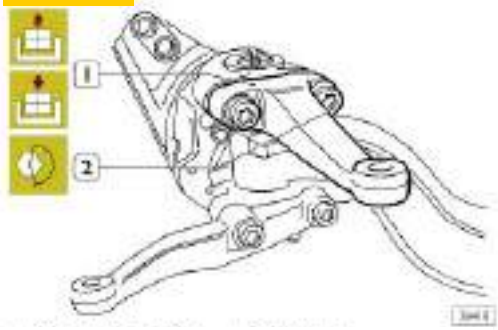

Loosen the nut (2) with a wrench and remove the steering knuckle arm.
For re-installation, reverse the sequence of removal and tighten the nuts to a torque of 275-335 N.M.

Removal and installation of the tie rod

Figure 18

Straighten and remove the cotter pin (1).

Loosen the nut (2) and partially unscrew to keep the tie-rod from falling during removal.

Figure 19

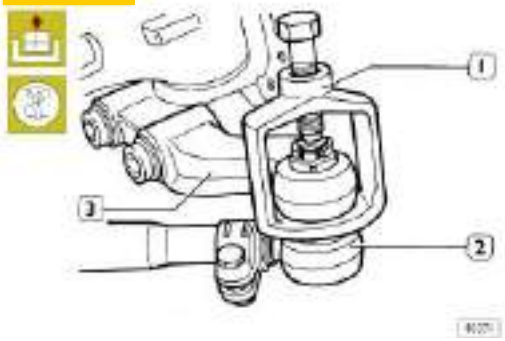

Release the tie rod arm (3) from the tie rod ASSY (2) with a pulling tool (1).Repeat the same operations on the opposite side. Unscrew the nuts totally and remove the tie rod ASSY.

For reinstallation, reverse the operations of removal.

Tighten the ball pin nut to the specified torque of 265-325N.m.Fix the cotter pin and lock efficiently.

Change the tie rod swivel end

Figure 20

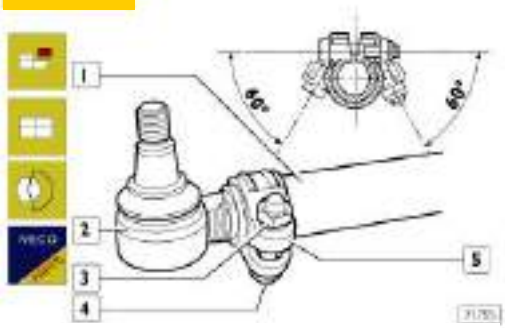

Secure the screw (4), loosen the nut (3) and release the knot (2) from tie rod (1).

Note: For convenient reinstallation of the tie rod and adjustment of the wheel toe-in, record the rotation turns to loosen each knot, so that the new parts can be tightened to the same turns.

Screw the new knot into the tie rod and tighten by the retaining nut (3) with the torque of 70-80N.m.Check and adjust toe-in (if necessary).

Note: The clamp (5) (positioned in one of the set-ups shown in the figure) must be tightened by the nut (3) .

Removal and installation of the tie rod arm

Figure 21

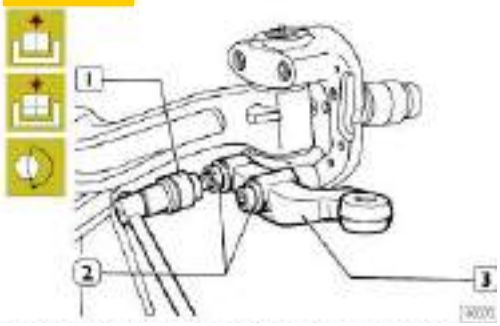

Remove the lock pin, loosen nut (2) with a wrench (1) and remove the tie rod arm (3).

For reinstallation, reverse the operations of removal and fasten the retaining screw to a torque of 263-325 N.m. **Note : The cone hole's big end of the tie rod arm should be placed facing up.**

Removal and installation of the brake shoe ASSY

Check the wear of the friction disc and change it when the thinnest thickness is≤6.7mm.

Figure 22

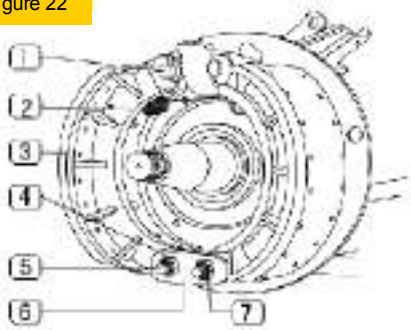

Remove the return tilt spring (2) and cotter pin (7), loosen the hexagon slotted flat nut (4) and location-limited plate (6).Take down the roller (1) and brake shoe ASSY (3). Take out the brake shoe support pin (5).

To install the brake shoe ASSY, reverse the steps of removal.

Note: When fixing the hexagon slotted flat nut (4), the torque is 256-325N.m. When the roller is mounted, the brake shoe should open when the brake arm is moved and close when the brake arm is released. Otherwise, the assembling condition of each part should be checked to see if any problems exist.

拆卸和安装凸轮轴

图 23

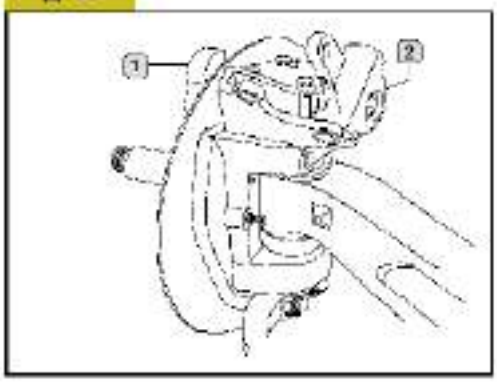

使用钳子拆下轴用弹簧挡圈，调整垫片、垫圈，取出制动间隙调整臂总成（2），拆卸垫片，拆出制动凸轮轴（1），取出“O”形密封圈。

重新安装时按拆卸相反顺序进行。

附注 装制动间隙调整臂总成（2）时，通过选择合适的调整垫片保证制动间隙调整臂总成（2）的轴向间隙为0.5—0.8mm，制动调整臂，凸轮轴转动灵活。

拆卸和安装制动器防尘罩总成

图 24

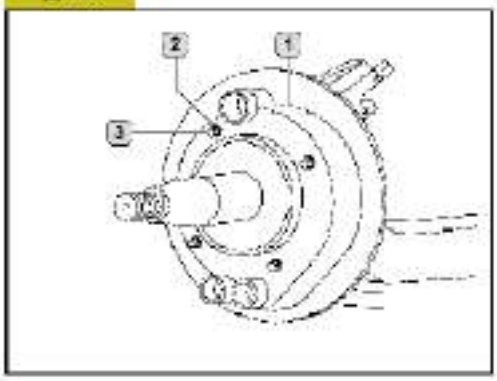

拆卸六角头螺栓（3），弹簧垫圈（2），取下制动防尘罩总成（1）。

重新安装时按拆卸相反顺序进行。
（六角头螺栓（3）的拧紧力矩为23N.m）

拆卸和安装支架、转向节总成

拆卸

图 25

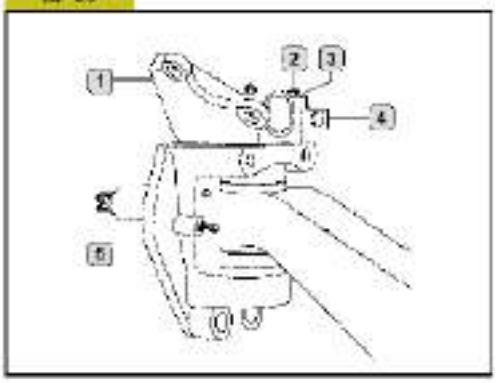

使用扳手松开螺母（2），用铜棒敲击取出支架总成（1）和制动间隙调整臂总成支架（4）及垫圈（3），然后取出转向节总成（5）。

图 26

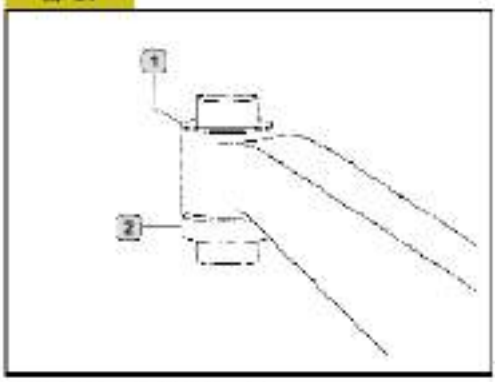

拆卸垫片（1）和滚针轴承（2）。

Remove the hexagon head bolt (3) and spring washer (2) and take down the brake dust cover ASSY (1).

- For installation, reverse the steps of removal.
- (The tightening torque of the hexagon head bolt (3) is 23N.m.)

Installation

Figure 27

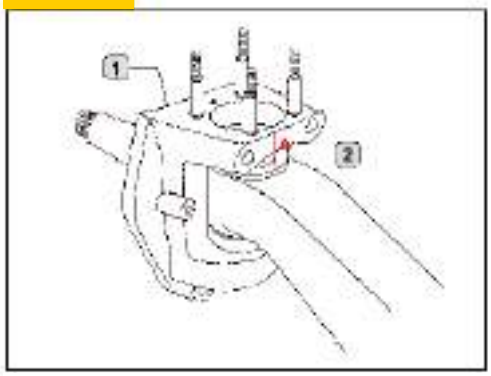

Remove all the burrs on each mounting surface and bores, and wipe clean. Aligning the ring surface of the nylon bearing protective ring to the front axle plane, fix it on the front axle steering knuckle pin, and mount the steering knuckle ASSY (1) on the king pin (2) after applying adequate grease to the inner side of the steering knuckle copper bushing. Maintain the right position of the steering knuckle and measure the depth A from the upper surface of the knuckle's big hole to the upper surface of the front axle by a vernier depth gauge.

Figure 28

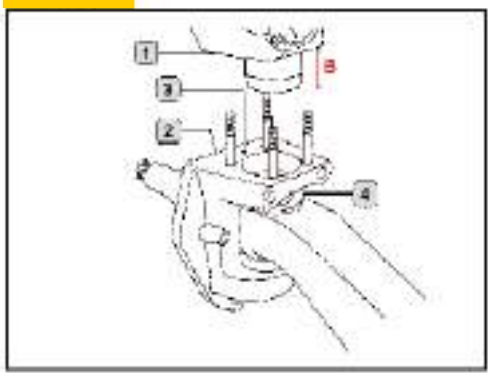

Measure the length of B of the smooth excircle on the bracket (1).Place a suitable gasket (4) between the upper surface of the front axle pin hole and open-seat plane of the steering knuckle (gasket thickness A-B-0.1) and insert a cylindrical pin (3) into the steering knuckle ASSY (2).Then install the O type sealing ring inside the front axle bore of the bracket ASSY, tap the bracket ASSY into place of the steering knuckle bore with a brass bar.

Figure 29

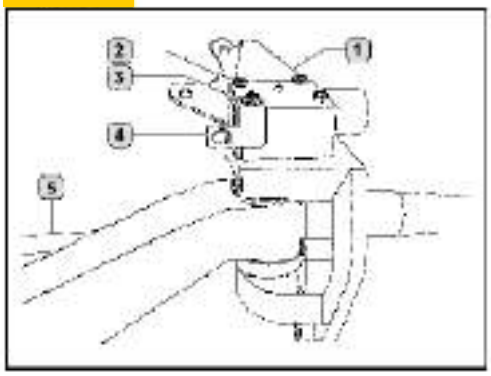

Make sure the locelle fin (1) and the tie rod (5) is on the same side of the cross beam. Fix the front bracket (4) of the brake clearance adjusting arm and washer (3) to the stud bole. Fix and tighten 4 self-locking nuts (2), (the tighten torque is 120-160N.m).

Inspection and adjustment of the axial clearance of the steering knuckle

Figure 30

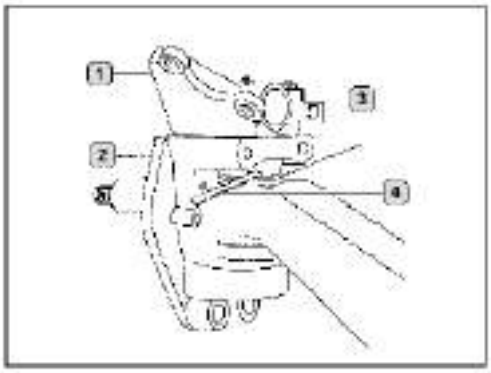

Measure the axial clearance of the steering knuckle with a fleer gauge (4). The allowed range is between 0.05 and 0.1 mm. Hang a spring balance in the steering knuckle (2) pin bore that rotates the steering knuckle by a constant speed, It's conforming if the stress force of the spring balance is no more than 9kg and rotation is smooth. If the clearance is not conformed, remove the bracket ASSY (1) and change the gasket (3) until the axial clearance conforms.。

Adjust the axial clearance of the steering knuckle with spare gaskets with suitable thickness.

Descriptions for the thickness of the spare gasket are provided in Specification and Data tablet.

Feed grease through the grease nipple to increase lubrication until grease leaks out of the front axle kingpin.

Adjust the front wheel toe-in

Figure 34

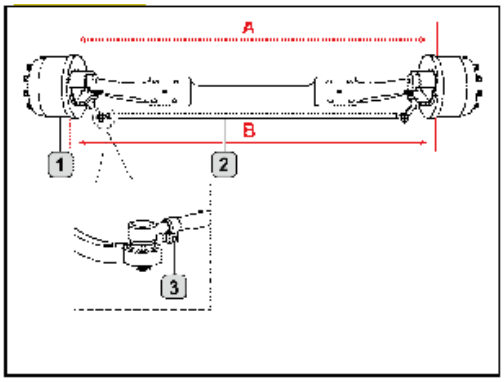

Loosen the clamp nut (3) on the tie rod (2), measure and adjust toe-in. Measure the biggest excircle on left & right brake hub (1) with a steel tape; the value measured opposite to the tie rod is A and the one measured on the same side of the tie rod is B. It conforms if B–A=(2-4)mm. If doesn't conform, rotate the tie rod and re-adjust until it conforms. After

adjustment, fine lock the clamp nut (3) on the tie rod. The specified torque is 70-80N.m.

Table

Rear driving axle

Description

The rear axle housing consists of punch-welded housing and cast steel housing, central and hub double reduction, planet gear differential, full-float half axle, and cam pressure brake. The first reduction is done by the drive bevel gear/annular driven bevel gear, while the second reduction is done by the wheel hub retarder.

Figure 1

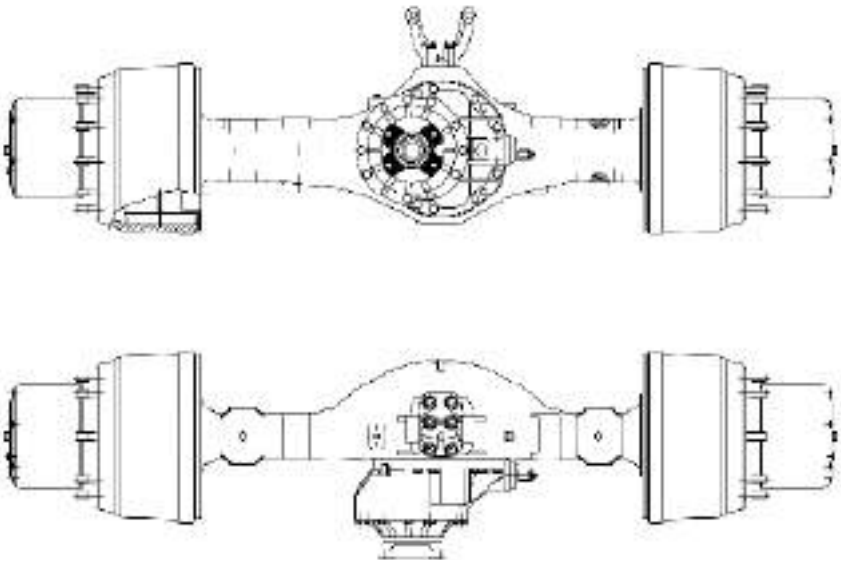

Rear axle

Specifications and data

Figure 2

	Axle type: Central and hub double reduction, planet gear differential and full-float half axle	
	Drive bevel gear bearing	2 tapered roller bearings
	Speed ratio	4.42—4.80—5.73—6.72—7.49—8.40—9.49
	Pre-tightening force of the drive bevel gear bearing: without seal N	15-24
	Bevel pinion bearing rolling torque adjustment	Adjusting shim
	Drive bevel gear/driven bevel gear position adjustment ring thickness mm	0.1—0.15—0.4—1.0
	Clearance between drive and driven bevel gears mm	0.20 — 0.48
	Clearance adjustment of the drive and driven bevel gears	2 adjusting nuts
	Wheel hub	
	Wheel hub bearing	2 tapered roller bearings
	Pre-tightening force of the wheel hub bearing N	12—30
	Lubrication	85W/90 (GL-5) vehicle gear oil Middle of the rear axle 6L and each wheel side 2L
	Rated load capacity kg	11500—16000

Common fault diagnosis

Appearance	Diagnosis	Solution
Abnormal noise of transmission	1. Incorrect gear clearance of the differential	Change the thrust washer or gear
	2. Incorrect clearance of the drive and driving gears	Adjust the adjustment ring or change the bearing seat washer
	3. Damaged bearing	Change the bearing
	4. Worn or damaged half axle gear, planet gear and washer	Change all faulty parts
	5. Damaged gear	Change gears.
	6. Metal powders or foreign body in the lubrication oil	Change the lubrication oil
Leakage of the lubrication oil	1. Oil seal worn, loosened or damaged	Change oil seal
	2. Damaged sealant	Re-apply sealant
	3. The retaining bolt is loosened	Fasten the bolts to the required torque
	4. Drain plug loosened	Fasten the plug to the required torque or change it
	5. Vent cap blocked	Clean or change the ventilating cap
Unsmooth or loosened wheel hub bearing	1. Too tight pre-tension force of the wheel hub bearing	Adjust the pre-tension force
	2. The bearing lacks lubrication or there is impure lubrication oil	Fill up or change the lubrication oil
	3. Too small pre-tightening force of the bearing	Re-adjustment.
	4. Worn or damaged bearing	Change the bearing
Seized braking that makes the brake drum overheat	1. Too small clearance between the brake shoe friction disc and brake drum	Readjust
	2. Loss of roundness of the brake drum	Machining, loss of roundness can be no greater than 0.35mm
	3. Distortion of the brake shoe	Calibration or change it
	4. Seized brake shoe supporting pin or camshaft	Lubricate. After lubrication, change the bushing if necessary.
	5. Worn or broken friction disc	Replace
	6. Elongated or broken brake shoe return spring	Replace
	7. Spring brake not released thoroughly	Check and replace the spring brake pipeline,
The vehicle pulls to one side when braking	1. Tire pressure does not conform to the requirement or type of tire	Check/replace it.
	2. Improper adjustment of the braking clearance	Readjust
	3. Different wearing of the friction disc	Change or repair
	4. Oil-sludge-contaminated or ablated brake shoe friction disc.	Wash with petrol or alkaline water and blow dry
	5. Different material of the friction disc	Change to the friction disc with same material
	6. Loss of roundness of the brake drum	Machining, loss of roundness can be no greater than 0.35mm
High hub temperature	1. Insufficient lubrication oil	Add lubrication oil
	2. Incorrect oil or perishable oil	Replace
	3. Too small (?) clearance between the brake shoe friction disc and brake drum	Readjust
	4. Loss of roundness of the brake drum	Machining, loss of roundness can be no greater than 0.35mm
	5. Worn or broken friction disc	Replace
Impact when starting	Too great engaging clearance of the bevel gear	Readjust the engaging clearance of the bevel gear

Figure 3

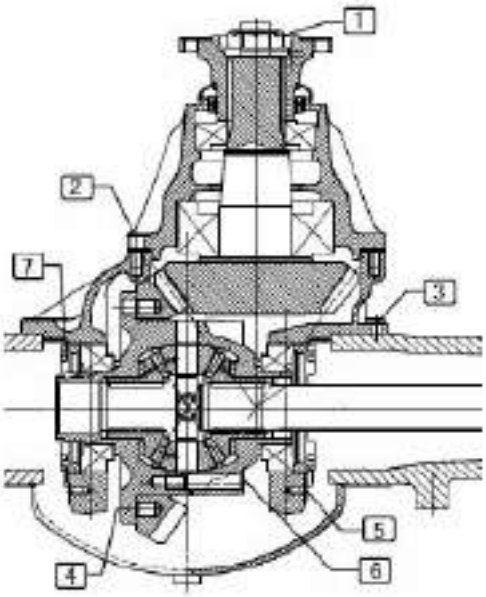

Tightening Torque

	Description	Torque	
		Nm	kgm
1	Flanged nuts retaining the drive gear	750-800	75-80
2	Bolt retaining the drive bevel gear ASSY and retarder housing	120-138	12-13.8
3	Nuts retaining the retarder housing and axle housing	83-95	8.3-9.5
4	Screws retaining the differential housing and driven bevel gear ●	290-310	29-31
5	Screws retaining the stop plate ●	23	2.3
6	Screws retaining the left and right half differential housings	175-195	17.5-19.5
7	Round nuts tightening the fixed engaging sleeve	190-210	19-21

Figure 4

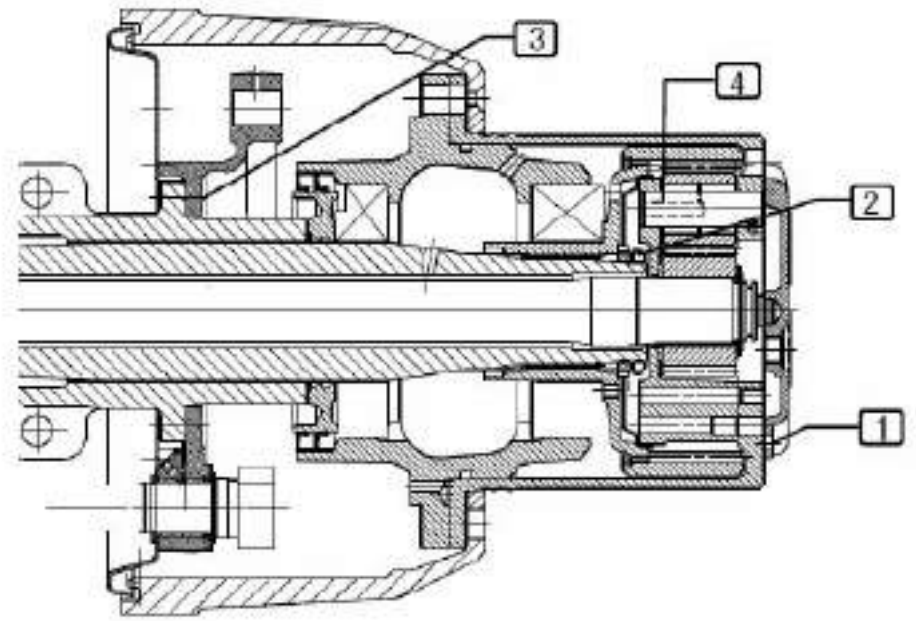

Tightening Torque

	Description	Torque	
		Nm	kgm
1	Connecting screws of the cover and the planet carrier ASSY	46-52	4.6-5.2
2	Outer round nuts of the axle housing	550-600	55-60
3	Screws retaining the bottom plate and axle housing	315-325	31.5-32.5
4	Bolts retaining the planet carrier and hub retarder housing	115-125	11.5-12.5

Figure 5

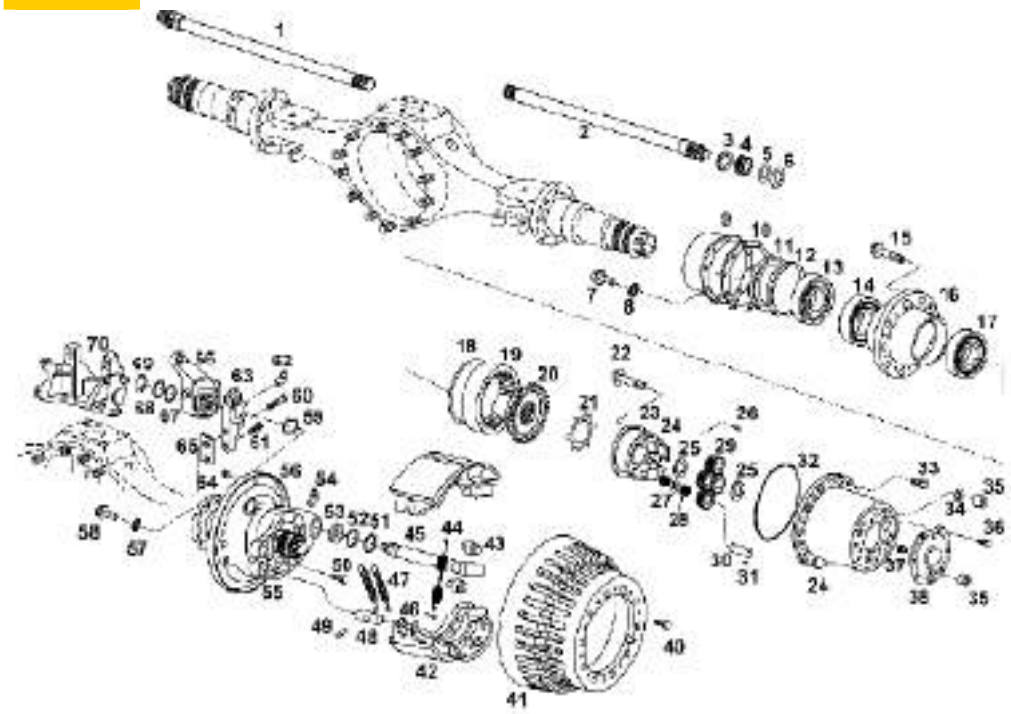

1 Half axle (right) **2.** half axle (left) **3.** sun gear washer **4.** sun gear **5.** washer **6.** axial spring washer **7.** hexagon head bolt **8.** spring washer **9.** oil proof cover **10**. seal gasket **11.** outer oil seal of the rear wheel hub **12.** inner oil seal of the rear wheel hub **13.** spacer ASSY **14.** cone roller bearing **15**. wheel bolt **16**. rear wheel hub **17.** cone roller bearing **18** axial stop ring **19.** annulus **20.** ring gear mounting ASSY **21**. locker **22**. bolt 23. planet carrier oil baffle **24**. planet carrier ASSY **25**. planet gear washer **26**. cylindrical pin **27**. washer **28** needle bearing **29** planet gear **30** planet gear shaft **31** steel ball **32** seal ring **33** cross slotted countersunk head screw **34** seal gasket **35** fillister hexagon socket bolt **36** hexagon head bolt **37** crest cover pin **38** crest cover **40** cross slotted countersunk head screw **41** brake drum **42** brake shoe ASSY **43** roller **44** return spring **45** brake camshaft **46** return spring pin **47** return spring **48** fulcrum pin **49** spring cylindrical pin **50** bolt **51** auxiliary washer **52** O type seal ring **53** bushing **54** metric taper threaded grease nipple **55** brake plate **56** brake dust cover ASSY **57** spring washer **58** hexagon head bolt **59** axial spring collar **60** hexagon head bolt **61** hexagon head bolt **62** metric taper threaded grease nipple **63** camshaft mounting **64** seal ring **65** adjusting shim **66** clearance adjustment arm ASSY **67** washer **68** adjusting shim **69** axial spring collar 70 air chamber support

Rear axle ASSY overhaul

Disassembly

Drain off the oil by unscrewing the bottom drain plug on the axle housing before mounting the axle assembly on the overhaul stand.

Figure 6

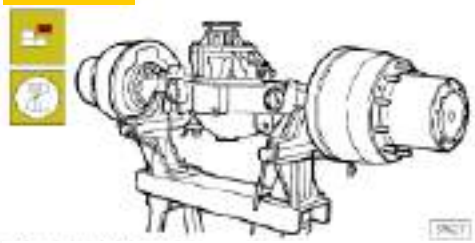

Position the axle assembly on stand.

Disassemble the hub retarder.

Figure 7

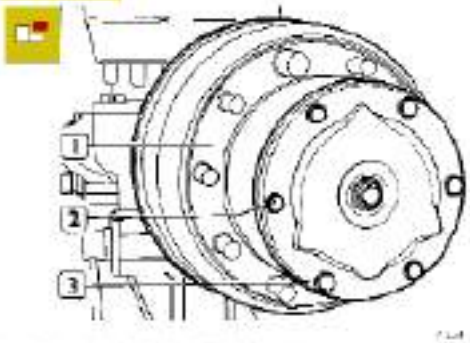

Unscrew the drain plug and drain the oil to a suitable container.

Note: Place a suitable container under to recover the oil.

Figure 8

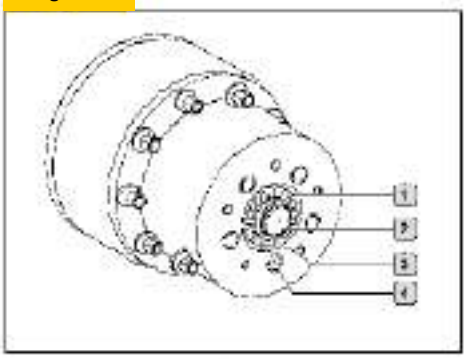

Remove the axial spring collar (3) and washer (4), pull out the half shaft (2) and sun gear (1)

Note: When removing the half shaft, move the joystick ASSY and locked with screw to lock the differential. This is to prevent the sliding

Figure 9

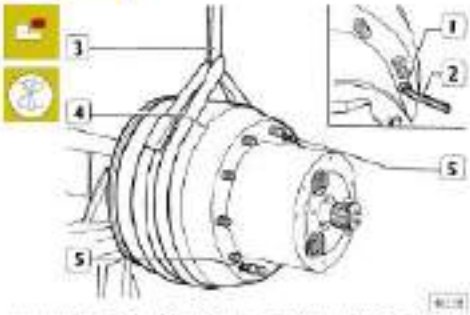

Loosen the two cross-slotted countersunk screws (1) retaining the brake drum with a wrench (2) and change the reaction screws (5)Tighten the reaction

Figure 10

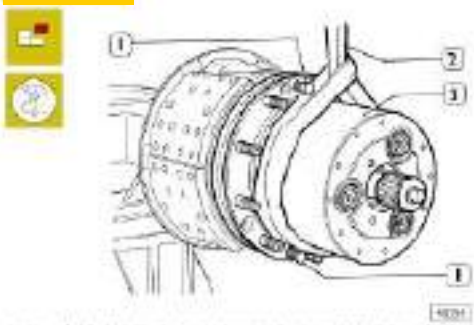

Loosen the two countersunk screws retaining the planet carrier ASSY and the rear wheel hub with a wrench. Change with reaction screws and tight reaction screw (1), remove the differential housing (3)

Figure 11

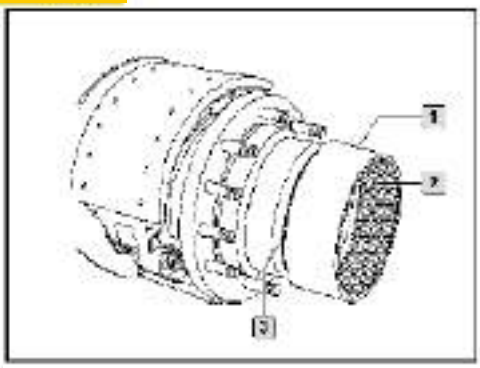

Remove the axial spring collar (3) and annulus (1) from

Wheel hub disassembly

Figure 12

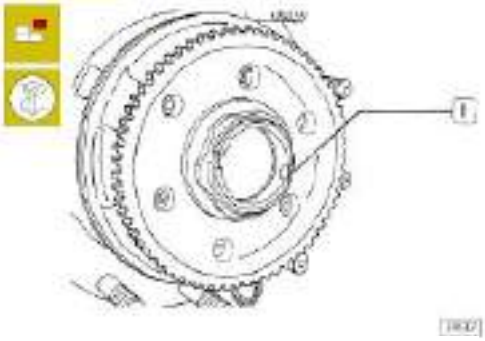

Roll the lock flap (1) of the inner and outer round nuts

Figure 13

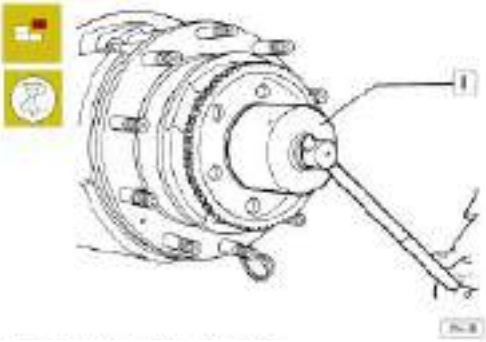

Loosen the outer and inner round nuts with a wrench

Figure 14

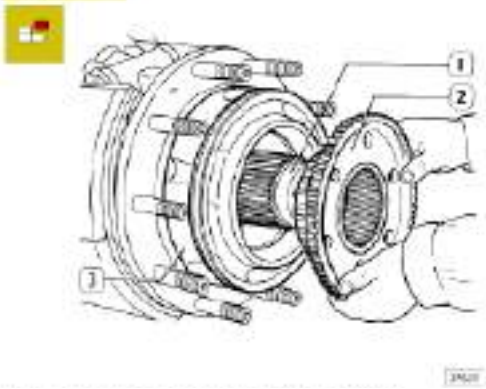

Extract the ring gear mounting ASSY (2) and wheel hub

Figure 15

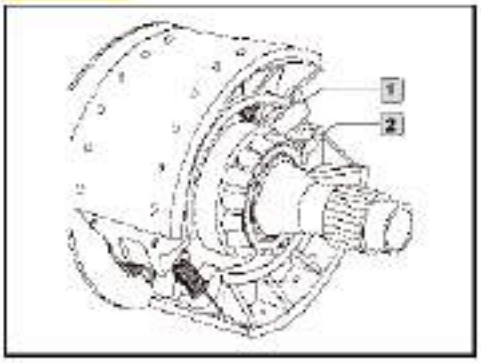

Take out the inner cup of the bevel bearing (2) and

Figure 16

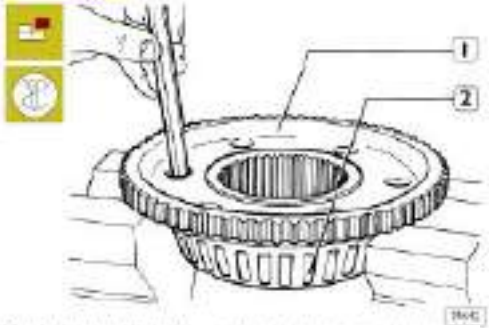

Pull out the outer bevel roller bearing (2) from the ring gear mounting (1) with a punch inserted into the ring gear mounting holes.

Figure 17

Take out the outer cup (2) of the inner bearing with a universal brass punch (1).The seal ring will also be

Figure 18

Remove the seal ring (2) from the rear wheel hub.

Disassemble the planet carrier ASSY

Figure 19

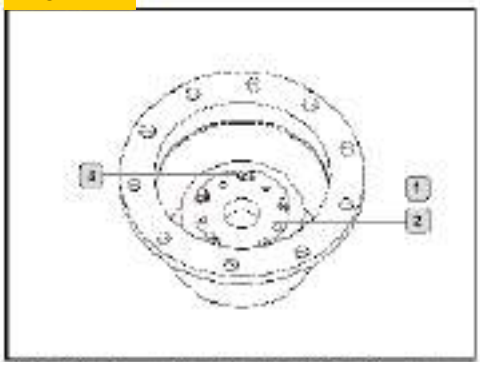

Remove the oil proof cover (1), take off the hexagon head bolt (3) with a wrench and push out the planet carrier (2).

Figure 20

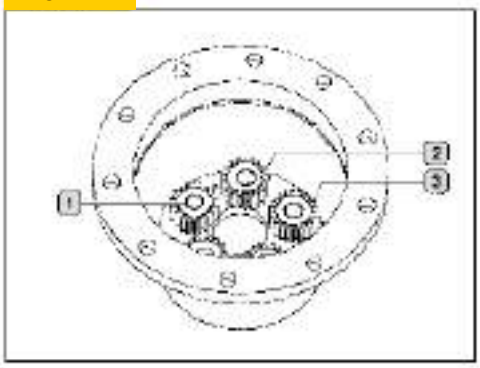

Take out the planet gear washer (2), planet gear (3) and needle bearing. Tap out the planet bearing shaft (1).

Clean and check the wheel hub and hub retarder components

Carefully clean the wheel hub components. Check the drive shafts for distortion. If necessary, straighten the half shafts with a hydraulic press; if this does not work, replace the half shafts. Check the bolts retaining the wheels, if the threads are damaged or deformed, they must be replaced. Extract and re-assemble the bolts under operation of a press. Once the assembly operation is finished, check that

Disassemble the brake shoe ASSY

Figure 21

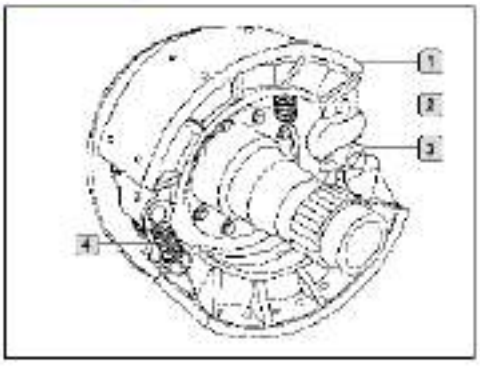

Take out the roller (3), take off the brake shoe ASSY (1) after removing the return spring (2) and (4).

Note: Take care not to mix the left and right brake shoe ASSYs. The brake shoe is always used in pairs.

Check the wear of the brake shoe friction disc, measure the thickness of the most seriously worn area and make

Disassemble the left and right rear brake camshaft

Figure 22

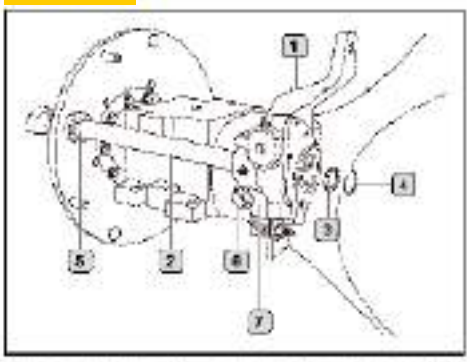

Take out the axial spring collar (4), adjusting shim (3), washer and brake clearance adjustment arm ASSY (1), remove the axial spring color (5), pull out camshaft (2)

Disassemble the brake plate ASSY

Figure 23

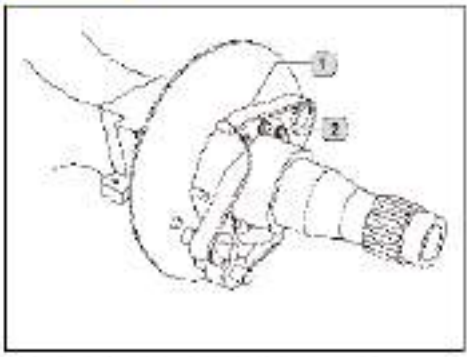

Unscrew the screw (2) and take out the brake plate

Figure 24

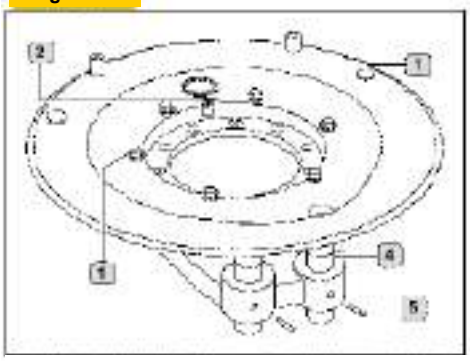

Remove the metric taper-threaded grease nipple (2), hexagon head bolts (1) and washer, take off the brake dust cover ASSY (1), spring cylindrical pin (5) and

For installation, reverse the steps of removal.

Assemble the wheel hub

Figure 25

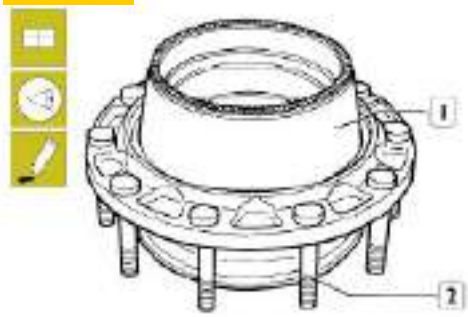

If the bolts (2) need to be replaced, before affixing the new bolts, make sure that the contact surface on the head is free of residues, burs and blisters.

After assembling, check that the bolts are fully inserted into the hub and that the right angle error does not exceed 0.3 mm.

Figure 26

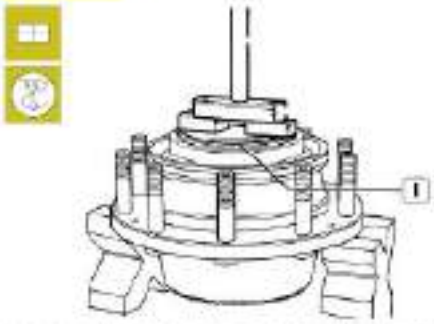

Clean the outer cup (1) and lubricate, place it in the hub bearing hole and press into place slowly with a press. Turn over the rear wheel hub and repeat the procedure.

Figure 27

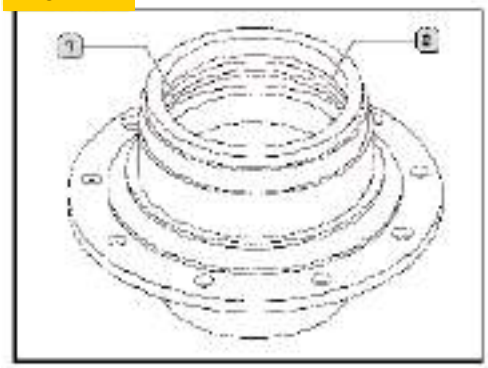

Clean the axial seal ring and apply oil to the surface, place it on the press block with the big plane matching the press block. Press in the inner axial seal ring (1), keep about 0.5 mm clearance with the hub hole on the

Mounting brake plate ASSY

Figure 28

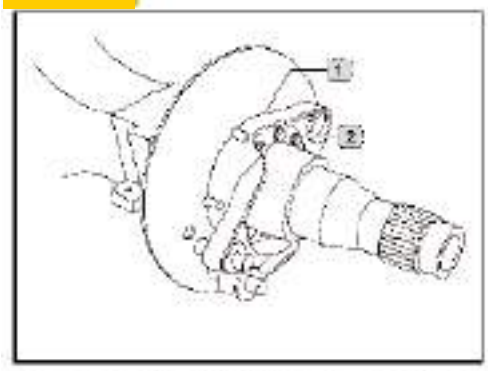

Mount the brake plate assembly (1) to the axle housing flange, with the thread section of the hexagon head screw (2) axially coated with anaerobic glue and tighten with a torque wrench to a torque of 315 – 325N.m.

Mounting the left and right brake

Figure 29

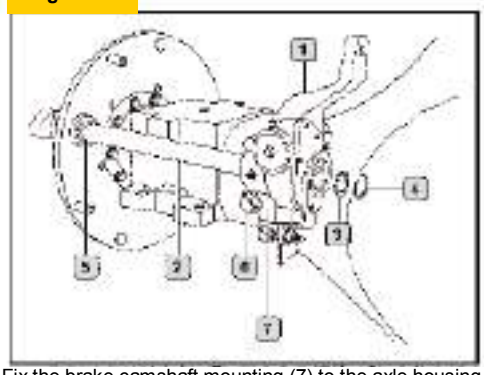

Fix the brake camshaft mounting (7) to the axle housing by hexagon head bolt (6), fit the auxiliary washer, O type seal ring on the camshaft (2), then fit on the auxiliary washer, axial spring collar (5) (axial spring collar not fitted in place yet) through the brake plate hole. Let the brake camshaft (2) passes through the mounting ASSY (7), with adjusting shim positioned under the camshaft mount to adjust and to ensure the free and smooth rotation of the brake camshaft. Remove the hexagon head bolt (6); this thread is coated with anaerobic glue. Tighten the bolt after fitting a flat washer, the tightening torque is 140-160N.m.Recheck that the brake camshaft rotates freely and smoothly, fix the brake clearance adjustment arm (1), washer, adjusting shim (3) and axial spring collar (4) on the brake camshaft. Plug a 0.5mm or 0.8mm feeler between the camshaft mounting and brake clearance adjustment arm; the central line of the camshaft and the brake clearance automatic adjustment arm shows verticality. Deviate to the axle housing position. The left and right is similar. After the clearance

Figure 30

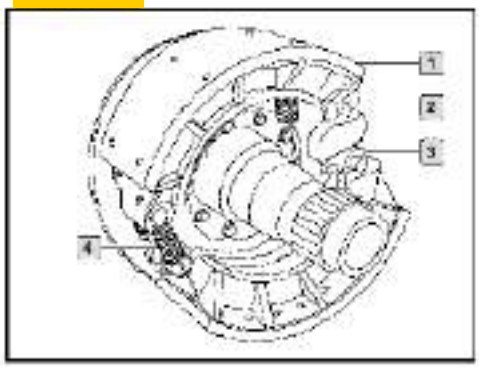

Clean the oil contamination from the friction disc (1), fix the return spring pin into the brake shoe ASSY, place the upper brake shoe ASSY on the plate annulus, hang the lower brake shoe by a return spring (4) from the inside. Fix the return spring (2) of the brake camshaft S end in the groove of the hook pin from inside. Wipe the roller (3) clean, apply anti-seize compound on the roller and mount it with the spring pressed with suitable tools. When moving the brake clearance automatic adjustment

Note: The brake shoe ASSY should be of the same material, the upper and lower should be paired

Mount the wheel hub ASSY

Figure 31

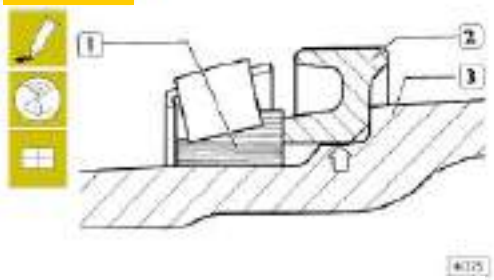

Apply lubrication grease on the half axle tube, heat the spacer (2) to 110℃ and mount it onto the half axle sleeve (3) with a punch. Heat the taper bearing internal

Figure 32

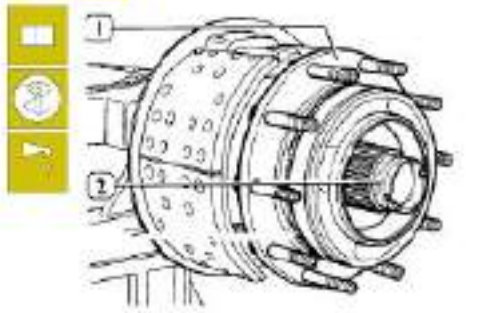

Lubricate the hub seal ring (1) and mount the wheel hub onto the half axle sleeve (2).

Figure 33

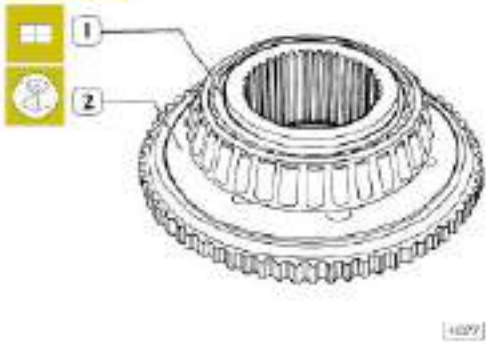

Heat the bevel roller bearing (1) to 110℃ and mount it onto the ring gear mounting (2) by a punch.

Figure 34

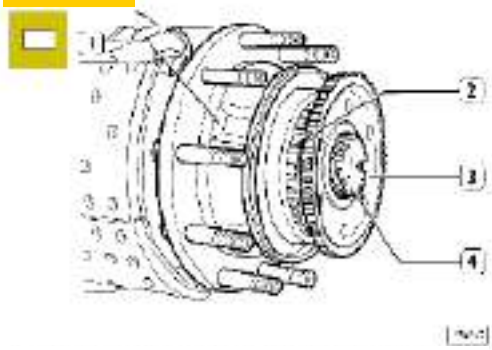

Apply lubrication grease to the bearing, and mount the ring gear mounting (3) and bevel roller bearing (2) to the

Figure 35

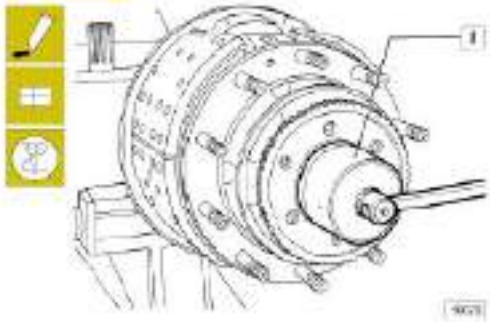

Apply drawing oil on the contact surface of the adjusting nuts and tighten with wrench (1), make sure the cone roller bearing is mounted into place. Tap with a brass bar until the rear wheel hub cannot be rotated manually. Loosen the round nuts 40-60°, fit on lock flap and

Note: Broken or cracks not permitted on the lock flap teeth and the teeth cannot be rolled for the

Assemble the hub retarder

Figure 36

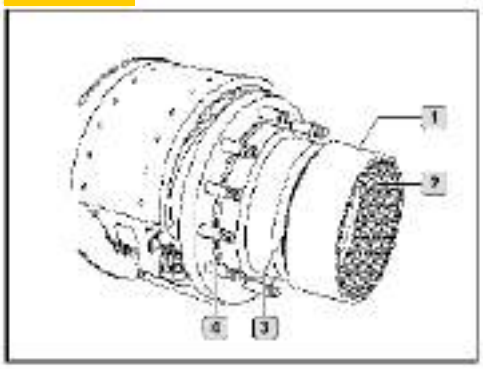

Check that the ring groove of the rear hub is free from any bur or other abnormality, fit on the seal ring (4) and apply oil to it. Put the axial collar (3) on the ring gear mounting (2), clean the annulus (1) teeth, apply oil

Figure 37

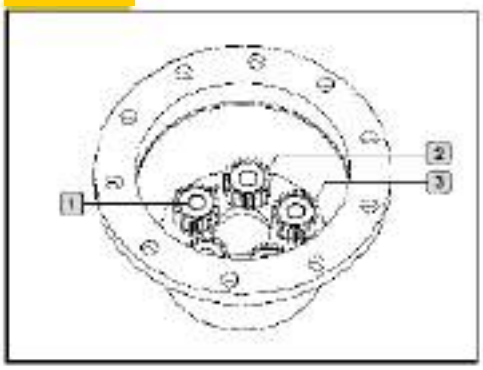

Take the planet carrier ASSY; make sure to mark the planet carrier and hub reduction housing. Tap the planet gear shaft into the hub reduction housing from the hub reduction small end with a brass bar (put the planet gear shaft bore end downwards, make sure the steel ball positioning hole aligns to the groove of the hub reduction, put in the steel ball before it is in place, tap it into place and lock by dotting punch. Successively fix planet gear washer (1), double row needle bearing, planet gear (3) and planet gear washer (2) onto the planet gear shaft. Tap-mount the planet carrier into the hub reduction according to the marks after the

Hoisting mount for the planet carrier

Figure 38

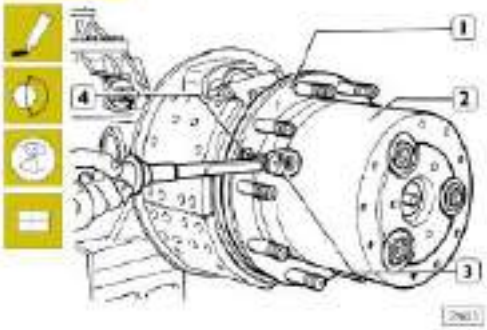

Apply one layer of flat sealant to the contact surface of the planet carrier and the wheel hub, and oil to the inner cavity surface of the planet carrier ASSY. Align the two countersunk holes (1) of the planet carrier ASSY (2) surface to the two M10 threaded hole of the rear wheel

Hoisting mount the brake drum

Figure 39

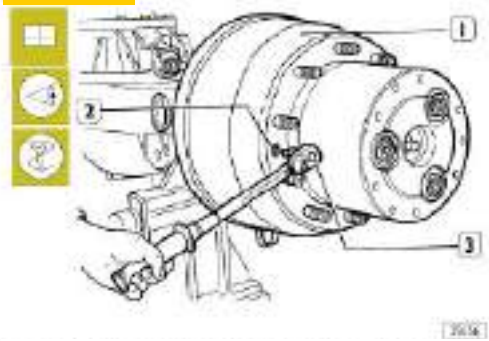

Mount the brake drum (1) to the planet carrier ASSY. Secure the brake drum with two cross-slotted pan head screws (2).

Mount the half axle

Figure 40

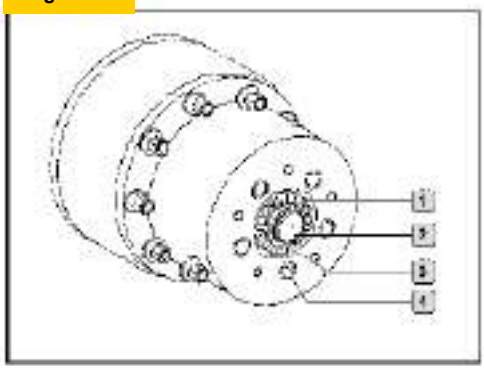

Fix the sun gear washer onto the half axle (2) and fit, in order, the sun gear (1), washer (4) and axial spring collar (3) in place, pull the half axle into the half axle

Mount the crown cover

Figure 41

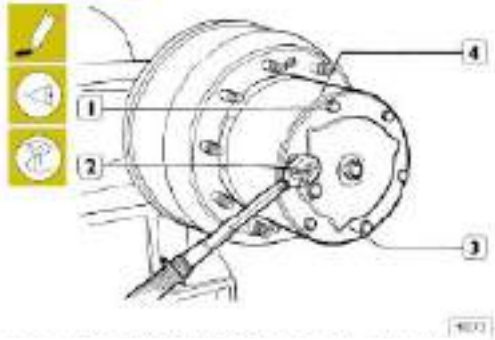

Evenly apply sealant along the threads around the crest cover (3), drop the anaerobic glue into the threaded bore of the hub retarder ASSY and apply anaerobic glue to hexagon head bolts along the threads in the axial direction, mount the crown cover, tighten with the wrench (2) to torque 46 -52 N.m.

Figure 42

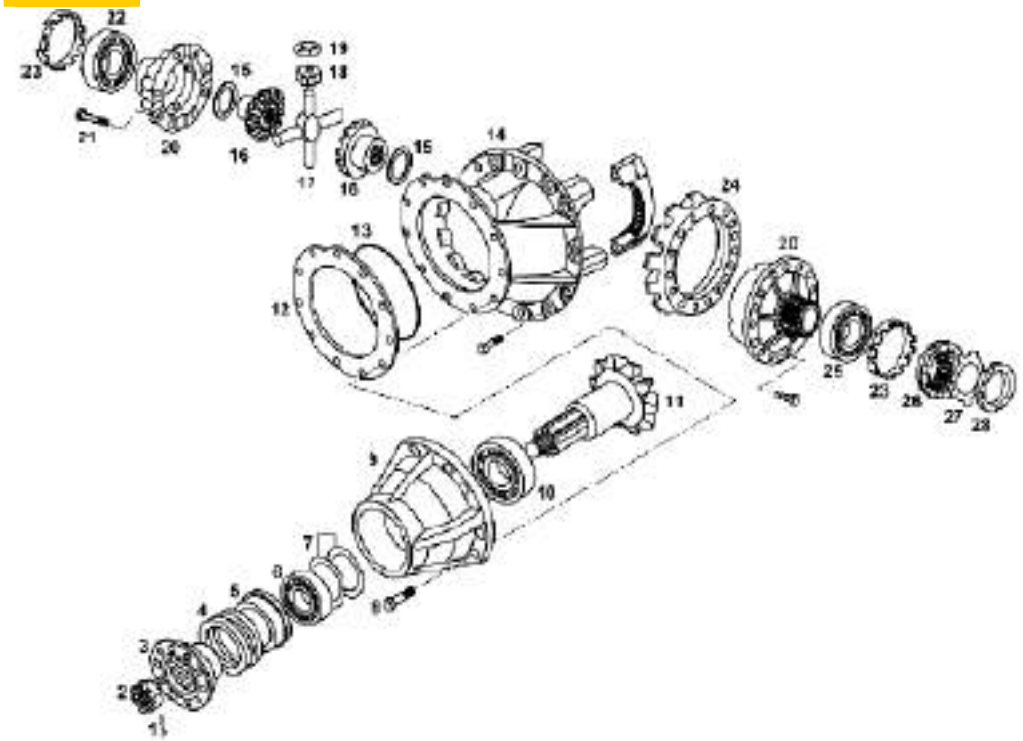

Differential unit components

1. Split pin 2 flange nuts 3 flange ASSY 4 seal ring 5 ring 6 bearing 7 adjusting shim 8 bolt 9 bearing seat 10 bearing 11 drive bevel gear 12 adjusting shim 13 seal ring 14 main retarder housing 15 half axle gear gasket 16 half axle gear 17 spider shaft 18 planet gear 19 planet gear washer 20 reduction housing assembly 21 screw 22 bearing 23 differential adjusting nut 24 driven gear 25 bearing 26 fixed engagement sleeve 27 lock flap 28 round nut

Removal and reinstallation of the main retarder ASSY

Note: Remove the half axle (by methods and procedures stipulated above) before

Removal

Figure 43

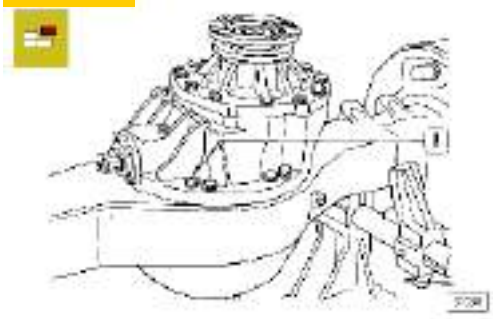

Remove the self-locking nuts (1) holding the main retarder housing to the axle housing surface. Hook the two symmetric holes on the flange end face with eye

Installation

Figure 44

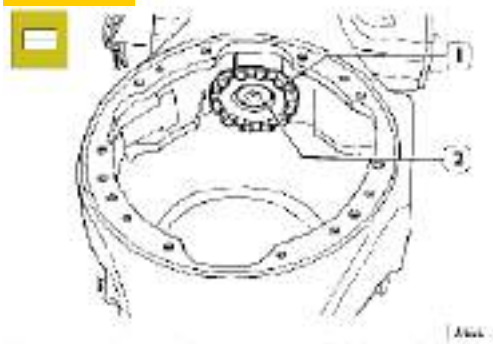

Fix the sliding engagement sleeve (1) onto the middle spline of the left half axle (2), make sure the differential lock mating shift fork is correctly guided into the sliding

Figure 45

Apply one layer of the sealant (1) to the axle housing big

Figure 46

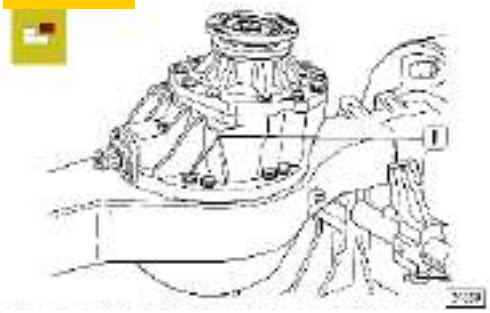

Align the positioning pin bore of the main retarder surface to the position pin of the axle housing big surface and tap in place Fix and tighten the self-locking nuts (1) evenly

Repair the main retarder ASSY

Removal

Figure 47

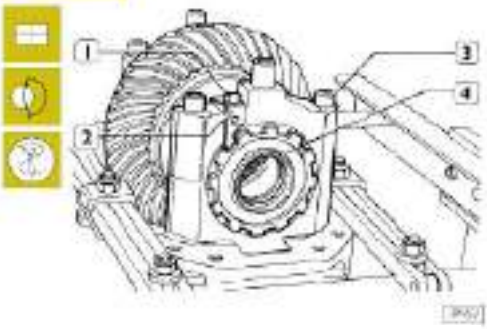

Mount the main retarder ASSY onto the rotary stand with the master reduction bearing cover upwards. Loosen the screws (1) and washer; remove the stop

Figure 48

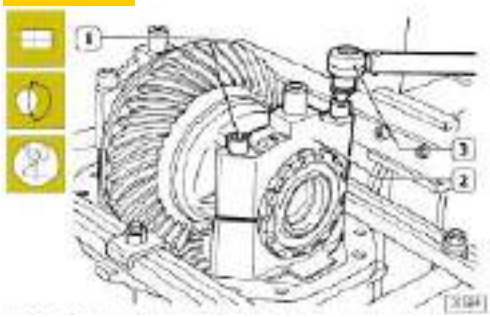

Unscrew the self-locking nuts (1) with a wrench (3), take out the main retarder bearing cover (2).

Note: The left and right main retarder

Figure 49

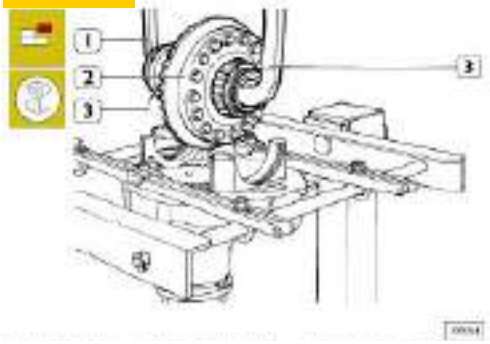

Raise the differential (2), bevel roller bearing (3) and differential adjusting nuts by hook (1).

Figure 50

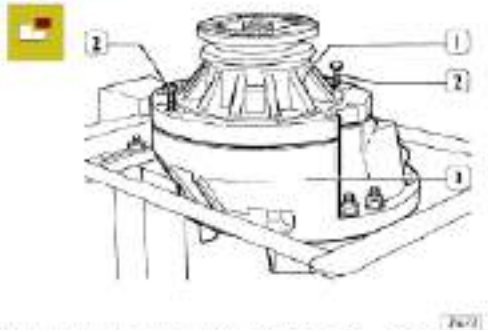

Unscrew the hexagon head screws (2) of the drive gear ASSY (1), remove the drive gear ASSY (1) and the adjusting shim to the mating surface of the main retarder

Disassemble the differential ASSY

Figure 51

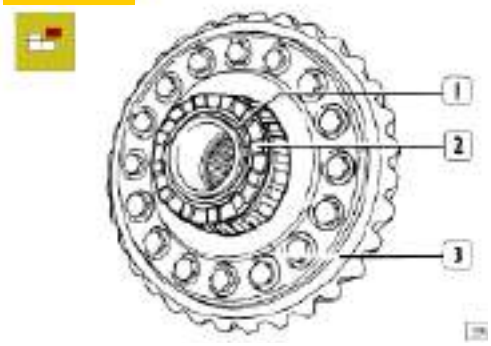

Remove the round nuts (1) and take out the fixed engagement sleeve (2) from the differential housing (3).

Figure 52

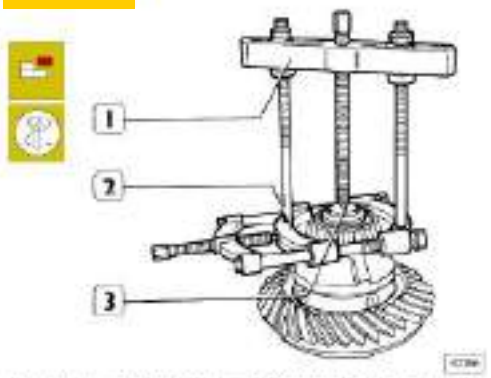

Take out the bevel roller bearing from the differential housing with a puller. Repeat the same operation on the

Figure 53

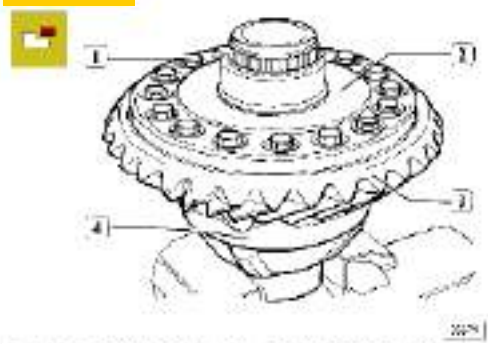

Fold over the rolled anti-loosening lock flap flat, loosen the hexagon head screws (1) and take out the driven

Figure 54

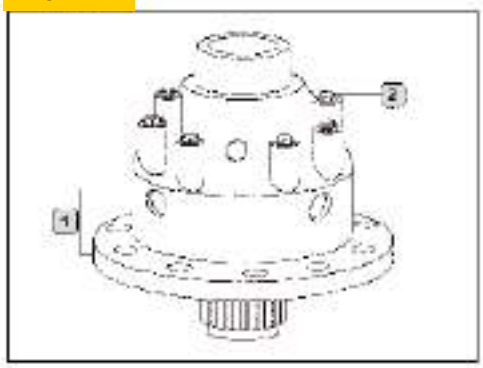

Unscrew the eight hexagon head screws (2) connecting the left and right differential housing (1), separate the left and right differential housing, take out the spider, planet gear, planet gear gasket, half axle gear and adjusting

Figure 55

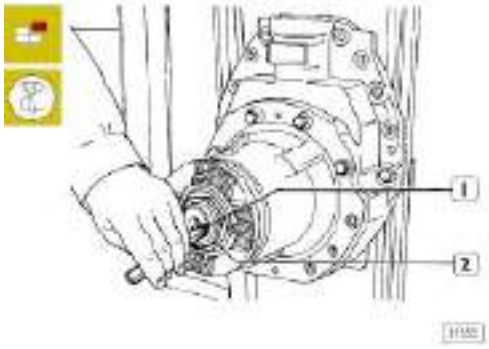

Take out the split pin (1) with pliers.

Figure 56

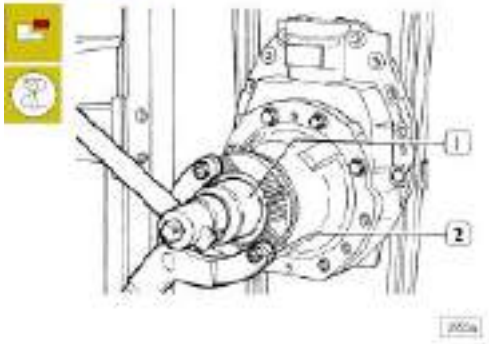

Unscrew the flange nuts with a wrench.

Figure 57

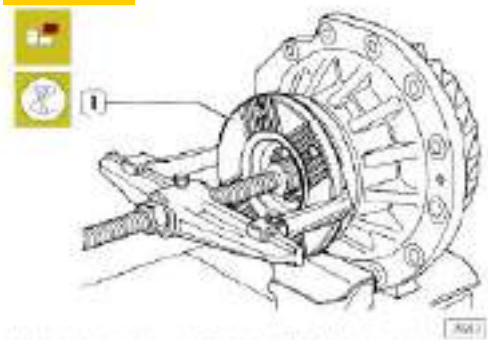

Remove the flange ASSY (1).If the flange ASSY is difficult

Figure 58

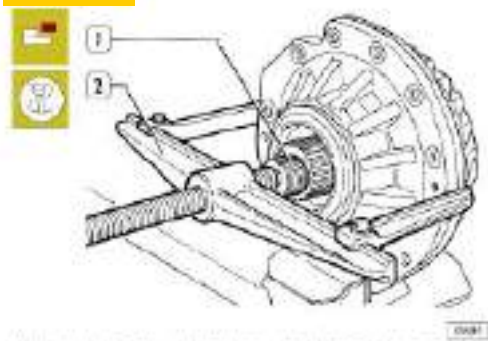

Remove the drive bevel gear (1), intermediate bearing, adjusting shim and seal ring assembly from the bearing

Figure 59

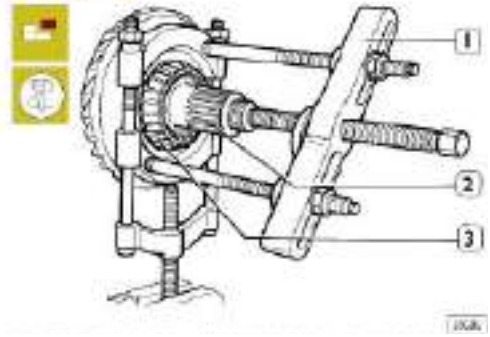

Take out the cone roller bearing (3) from the drive bevel gear (2) by a universal puller (1).

Figure 60

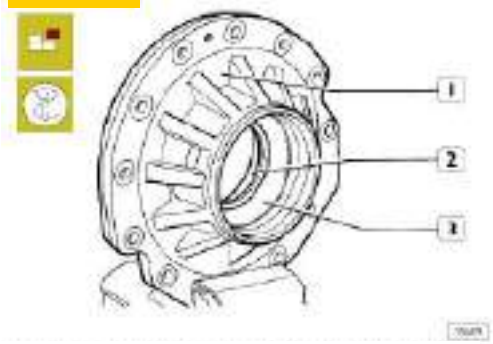

Using a punch, extract the outer cups (3 and 2) of the front and intermediate bearings from the bearing seat (1).

Check the differential components.

Note: Carefully clean all the threads to ensure accurate adjustments and correct tightening

Check the wear of the groove section or the thread section of the drive bevel gear. Replace the drive bevel

Note: If either the drive or the driven bevel gear must be changed, replace both of them as they are

Assemble the inner wheel differential

Figure 61

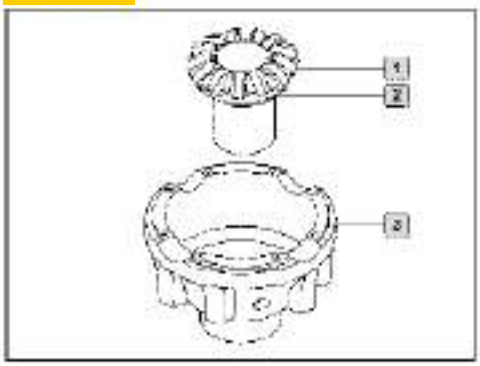

Fix the right differential housing (3) and clean the oil contamination and burs on it. Clean the half axle gear (1) and apply oil to its journal and end surface, fit one piece of the adjusting shim (2) with suitable thickness onto the half axle gear, guarantee the proper contact of the adjusting shim and end surface of the half axle gear

Figure 62

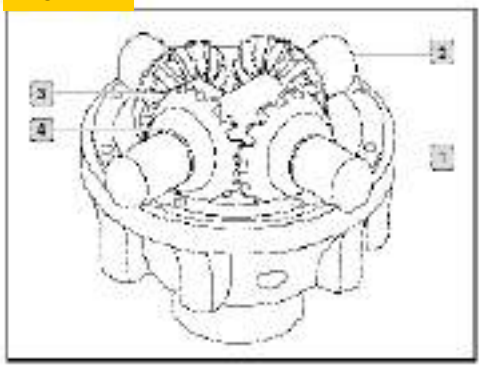

Mount the four planet gears (3), planet gear washers (4) successively onto the four journals of the differential spider (2), then into the right differential housing (1), tap

Measure the engaging backlash of the

Figure 63

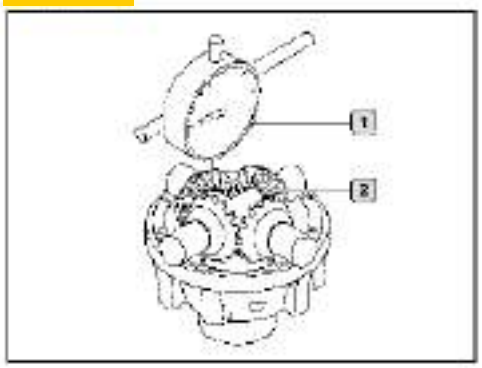

Place the probe head of the percent meter (1) into contact with the tooth surface of the planet gear (2), rotate the tooth contacting the probe quickly from one side to the other side. On the premise the half axle gear is secured, the value shown on the percent meter is the backlash value. Symmetrically measure 4-6 points of each planet gear, make sure the engaging backlash value is in the range of 0.52-0.20mm; maintain the

Figure 64

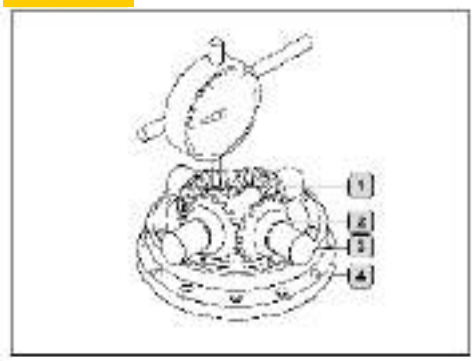

Measure the left differential housing backlash using methods for measuring the right differential housing (remove the spider shaft (3), planet gear (1) and planet gear washer (2) of the right differential housing

Figure 65

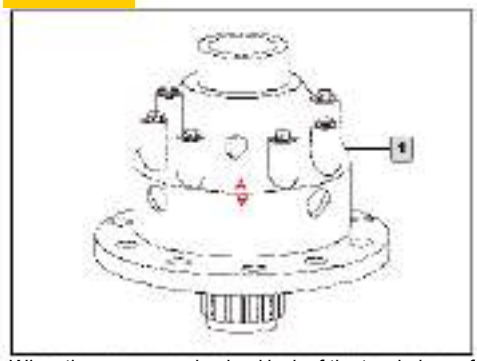

When the gear engaging backlash of the two halves of the housing is suitably adjusted, mount the right half differential housing (1), adjusting shim and half axle gear to the left half differential housing (make sure the counter number of the differential housing matches).

Figure 66

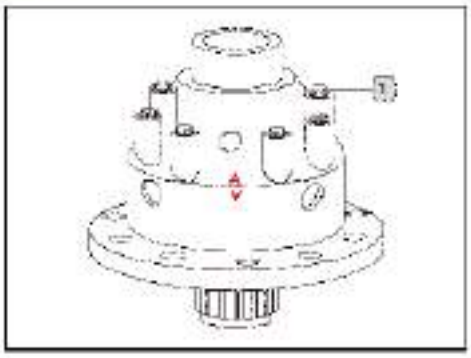

Mount the hexagon head bolts (1) into bolt holes with the thread section coated with anaerobic glue. Symmetrically tighten the bolts crosswise to a torque of

Figure 67

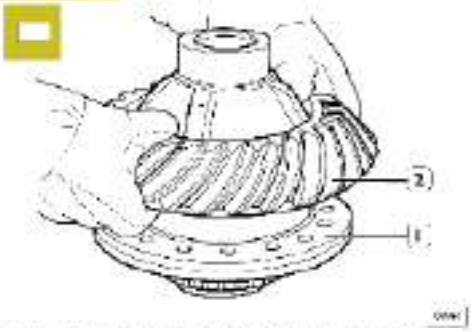

Mount in place the driven bevel gear (2) of the bevel gear set onto the differential housing (1) and secure

Figure 68

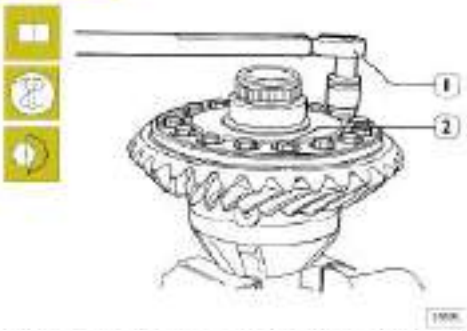

With the thread section axially coated with anaerobic glue, screw (2) in the bolts symmetrically and crosswise after passing through the anti-loosening lock flap. Tighten with a torque wrench (1) to a torque

Figure 69

Heat the inner cup (2) of the cone roller bearing to 80℃ and mount it to the journal of the differential housing with a punch (1).Repeat the same procedures for bearings on the other side.

Assemble the drive gear ASSY

Figure 70

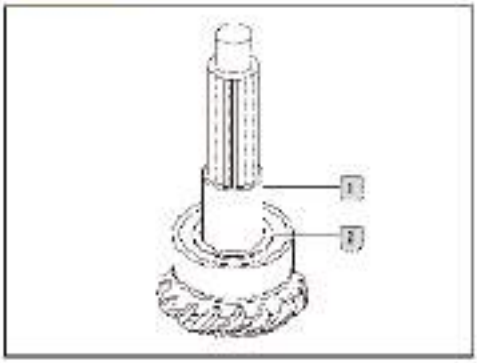

Take the drive bevel gear (1) and apply oil to its shaft, clean the cone roller bearing and press the inner cup

Figure 71

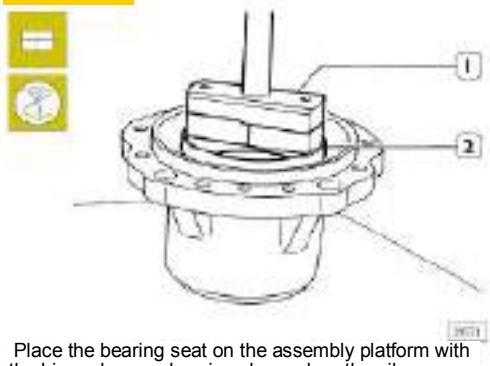

Place the bearing seat on the assembly platform with the big end upwards, wipe clean, clear the oil passage hole and apply oil to the mating surface, press the outer cup (2) of the cone roller bearing into the bore of the bearing seat by a press block (1).Turn over and press the other outer cup of the cone roller bearing by the

Figure 72

Place the drive gear assembly (3) into the bearing seat (4) and mount with suitable adjusting shim (2), press in

Figure 73

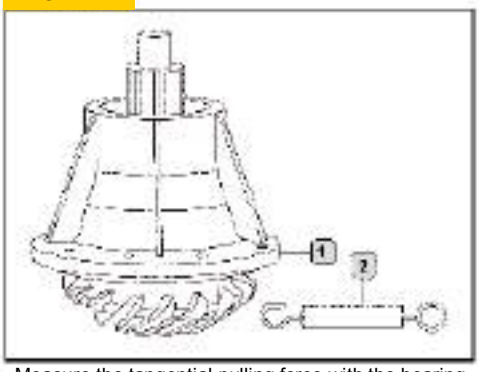

Measure the tangential pulling force with the bearing seat rotating at a uniform speed at the big end spigot outer round of the bearing seat (1) with a spring scale (2). It's qualified if the force is in the range of 15-24N. **The bearing pre-tension force is adjusted by increasing or decreasing the shim .**

Figure 74

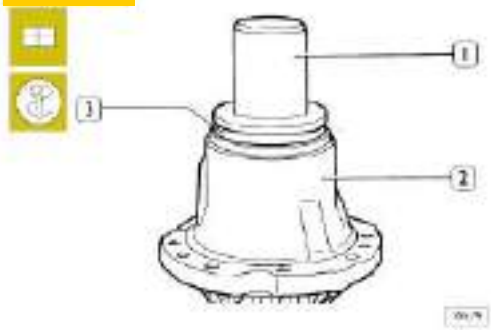

Take the ring assembly (3) and clean, apply sealant on the mating surface and press into the bearing seat (2)

Figure 75

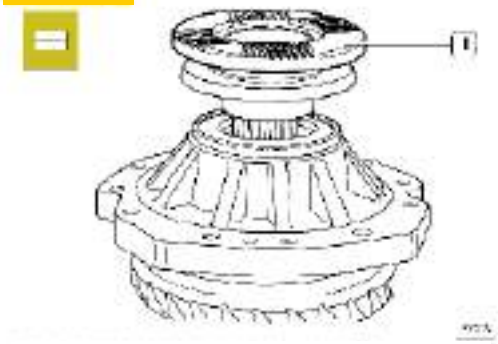

Mount and press the flange ASSY (1) into place with a punch.

Figure 76

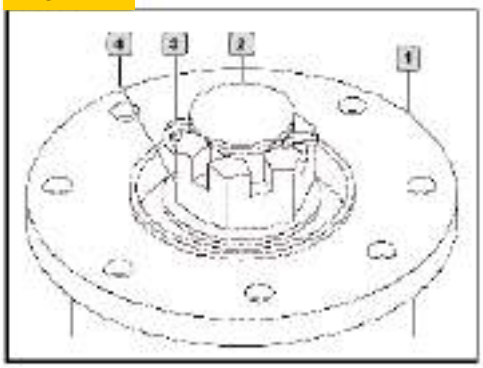

Fix the flange nuts (4) onto the drive gear shaft (2) and tighten to a torque of 750-800N.m.Fit the split pin (3) to the to and bottom of the pin opening and lock up the

Assemble the differential ASSY

Figure 77

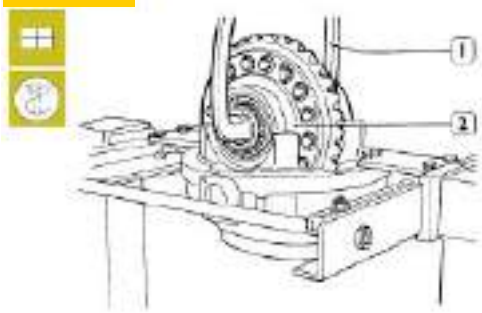

Apply oil to the detached main retainer bearing bore and place the differential ASSY (2) onto the main retarder

Figure 78

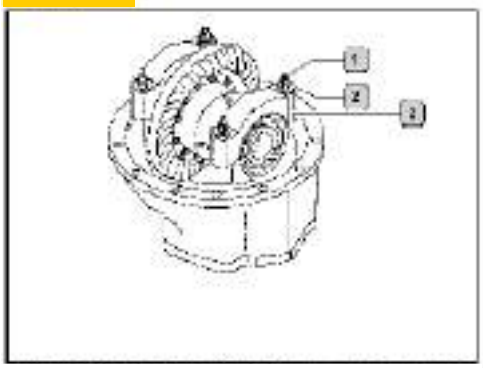

Fit the cover (3) with the marks (made during disassembly operations) correctly aligned. Axially apply anaerobic glue to the thread section of the stud bolts (1), fit and tighten the self-locking nuts (2) to a torque of

Figure 79

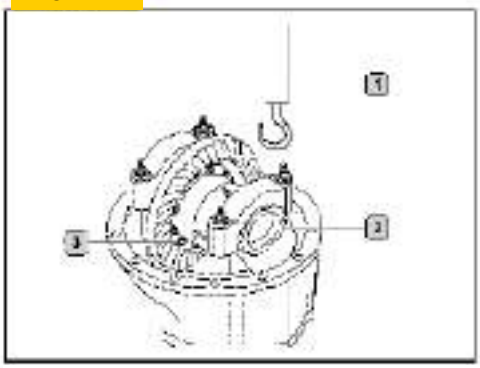

Fix the differential bearing adjusting nuts (2) in place on the two sides of the main differential housing. The pre-tightening torque of the differential bearing is 1.5-4N.m, the methods of inspection and adjustment are: By loosening and tightening the left and right adjusting nuts (2) of the differential bearing, measure the tangential pulling force of 15-43N with the bearing rotating at a uniform speed at the outer cylindrical surface (3) of the driven bevel gear bolt head using a spring scale (1).Make sure the notch of the bearing cover locking flap is aligned to the groove of the differential bearing adjusting nuts.

Figure 80

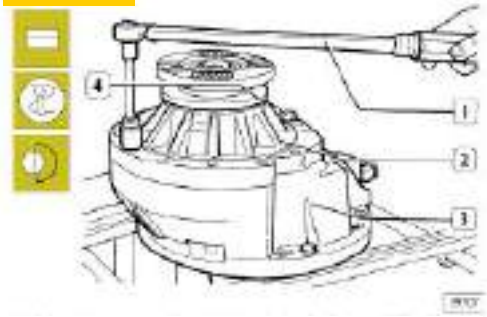

Turn over the main retarder housing, take the drive gear ASSY and clean and apply sealant to the mating surface. Clean the oil hole of the adjusting shim, apply one layer of sealant along the oil hole and place the shim onto the drive gear ASSY. Hold the adjusting shim with pliers and align the oil hole, mount the seal ring. Mount the drive dear ASSY (2) onto the main retarder housing (3).Symmetrically fix and evenly tighten the four hexagon head bolts (4).

Measure the engaging backlash and the meshing

Figure 81

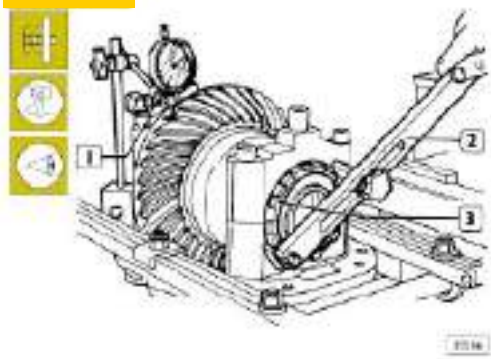

Place the probe head of the percent meter (1) in contact with the tooth surface of the driven bevel gear, rotate the tooth contacting the probe quickly from one side to the other. On the premise that the drive gear is secured and static, the value shown on the percent meter is the engaging backlash value. Symmetrically measure at 4 different points, make sure the engaging backlash is in

Figure 82

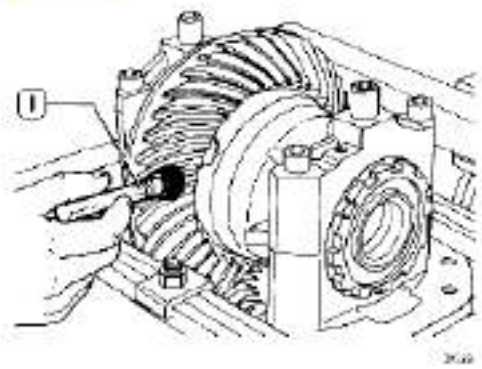

Evenly apply one thin layer of the red lead powder on the teeth of the driven bevel gear with a brush (1).Symmetrically paint 4 points and two teeth at each point. Rotate to engage the drive and driven gear and the meshing mark will be shown on the teeth convex surface of the driven bevel gear. Make sure the position of the mark is in the middle of the teeth width, slightly deflecting to the small end. The mark area should be longer than

Figure 83

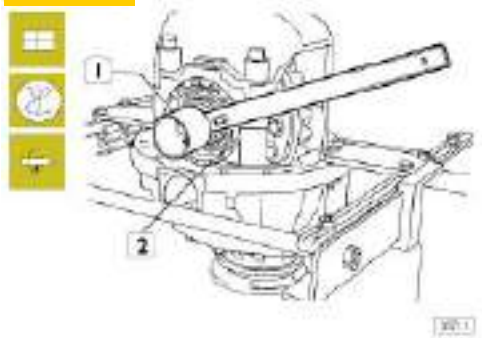

If the engaging backlash and the meshing mark do not reach the requirements, adjustment should be made. Methods for adjusting the engaging backlash are as follows:

Assuming that the pre-tightening force of the differential bearing is maintained, loosen or tighten the left and right differential bearing adjusting nuts (2) equally to guarantee the meshing backlash

Figure 84

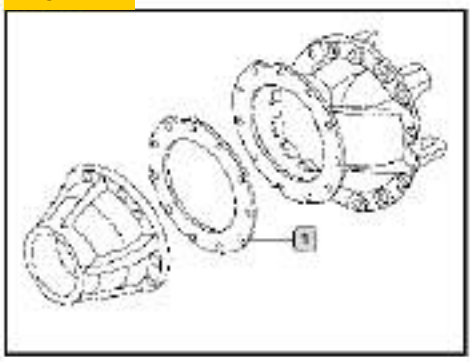

Methods for adjusting the gear meshing mark are as follows:

Increase and decrease the adjusting shim (1) to

Note: When compensating the backlash, make sure the notch of the bearing cover locking

Figure 85

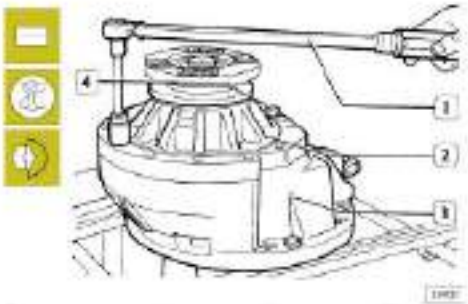

Remove the four pre-loaded hexagon head bolts (4), take eight hexagon head bolts and apply anaerobic glue axially to the thread section of the bolts, symmetrically fix with a torque wrench (1) and evenly tighten. The tightening torque of the bolt is

Figure 86

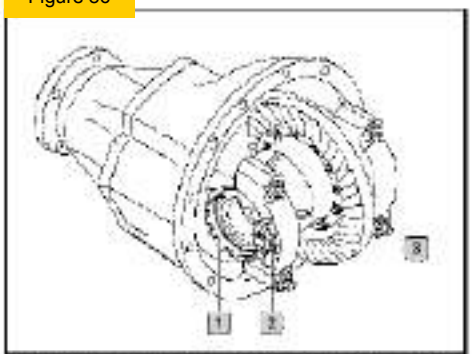

Get the stop plate (3) and spring washer, tighten the hexagon head bolts (2) after coating with anaerobic glue with tighten to torque of 23N.m.Lock up the left and right differential bearing adjusting nuts (1), making sure

Figure 87

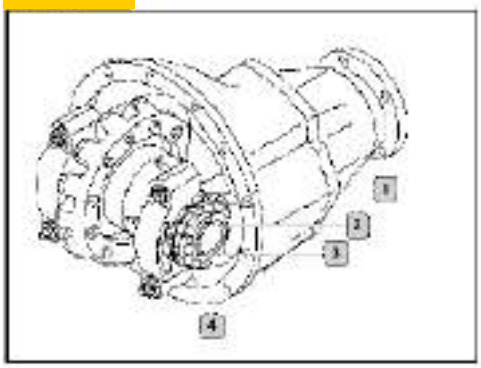

Successively mount fixed engagement sleeve (1), lock washer (2) and round nuts (4) onto the spline section (3) of the differential housing. Tighten the round nuts, make sure the torque is about 190-210N.m, lock up the round nuts with a lock-up washer. Rotate the gear; it should be free from interference, seized or abnormal noises, etc..

Intermediate axle

Description

The intermediate axle housing is classified by punching-welding housing and cast steel housing; central and hub double reduction, planet gear differential, full-float half axle and cam pressure brake. The first reduction is done by the drive bevel gear/annular driven bevel gear, while the second reduction is done by the wheel hub retarder.
The intermediate axle is equipped with a transfer unit that distributes the torque to the two axles.

Figure 1

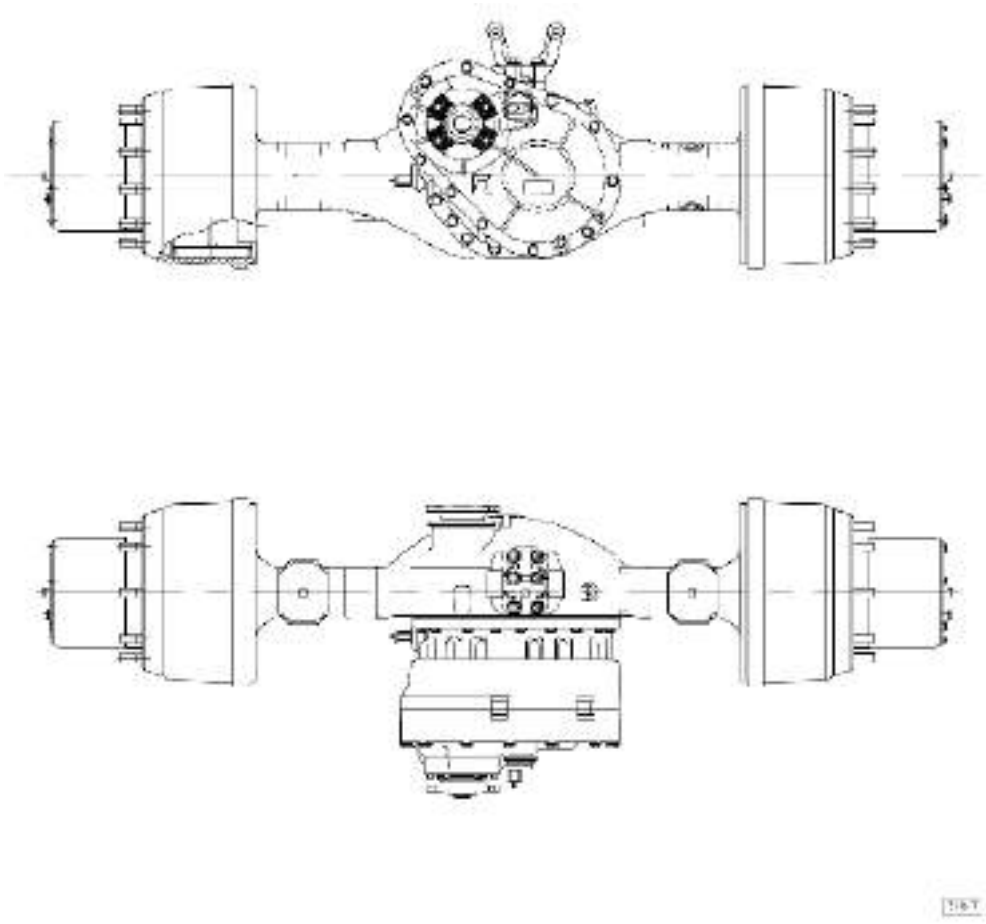

Specifications and data

	Axle type: Central and hub double reduction, planet gear differential and full-float half axle	
	Bevel pinion bearings	2 tapered roller bearings
	Speed ratio	4.42—4.80—5.73—6.72—7.49—8.40—9.49
	Pre-tightening force of the drive bevel gear bearing: without seal N	15-24
	Bevel pinion bearing rolling torque adjustment	Adjusting shim
	Drive bevel gear/driven bevel gear position adjustment ring thickness mm	0.1—0.15—0.4—1.0
	Clearance between drive and driven bevel gears mm	0.20 —0.48
	Clearance adjustment of the drive and driven bevel gears	2 adjusting nuts
	Wheel hub	
	Wheel hub bearing	2 tapered roller bearings
	Pre-tightening force of the wheel hub bearing N	12—30
	Lubrication	85W/90 (GL-5) vehicle gear oil Middle of the intermediate axle is 8.3L and each wheel side is 2L
	Rated load capacity kg	11500—16000

Common fault diagnosis

Appearance	Diagnosis	Solution
Abnormal noise of transmission	1. Incorrect gear clearance of the differential	Change the thrust washer or gear
	2. Incorrect clearance of the drive and driving gears	Adjust the adjustment ring or change the bearing seat washer
	3. Damaged bearing	Change the bearing
	4. Worn or damaged half axle gear, planet gear and washer	Change all faulty parts
	5. Damaged gear	Change gears.
	6. Metal powders or foreign body in the lubrication oil	Change the lubrication oil
Leakage of the lubrication oil	1. Oil seal worn, loosened or damaged	Change oil seal
	2. Damaged sealant	Reapply sealant
	3. The retaining bolt is loosened	Fasten the bolts to the required torque
	4. Drain plug loosened	Fasten the plug to the required torque or change it
	5. Vent cap blocked	Clean or change the ventilating cap
Unsmooth or loosened wheel hub bearing	1. Too tight pre-tension force of the wheel hub bearing	Adjust the pre-tension force
	2. The bearing lacks lubrication or there is impure lubrication oil	Fill up or change the lubrication oil
	3. Too small pre-tightening force of the bearing	Re-adjustment.
	4. Worn or damaged bearing	Change the bearing
Seized braking that makes the brake drum overheat	1. Too small clearance between the brake shoe friction disc and brake drum	Readjust
	2. Loss of roundness of the brake drum	Machining, loss of roundness can be no greater than 0.35mm
	3. Distortion of the brake shoe	Calibration or change it
	4. Seized brake shoe supporting pin or camshaft	Lubricate. After lubrication, change the bushing if necessary.
	5. Worn or broken friction disc	Replace
	6. Elongated or broken brake shoe return spring	Replace
	7. Spring brake not released thoroughly	Check and replace the spring brake pipeline,
The vehicle pulls to one side when braking	1. Tire pressure does not conform to the requirement or type of tire	Check/replace it.
	2. Improper adjustment of the braking clearance	Readjust
	3. Different wearing of the friction disc	Change or repair
	4. Oil-sludge-contaminated or ablated brake shoe friction disc.	Wash with petrol or alkaline water and blow dry
	5. Different material of the friction disc	Change to the friction disc with same material
	6. Loss of roundness of the brake drum	Machining, loss of roundness can be no greater than 0.35mm
High hub temperature	1. Insufficient lubrication oil	Add lubrication oil
	2. Incorrect oil or perishable oil	Replace
	3. Too small clearance between the brake shoe friction disc and brake drum	Readjust
	4. Loss of roundness of the brake drum	Machining, loss of roundness can be no greater than 0.35mm
	5. Worn or broken friction disc	Replace
Impact when starting	Too great engaging clearance of the bevel gear	Readjust the engaging clearance of the bevel gear

Figure 2

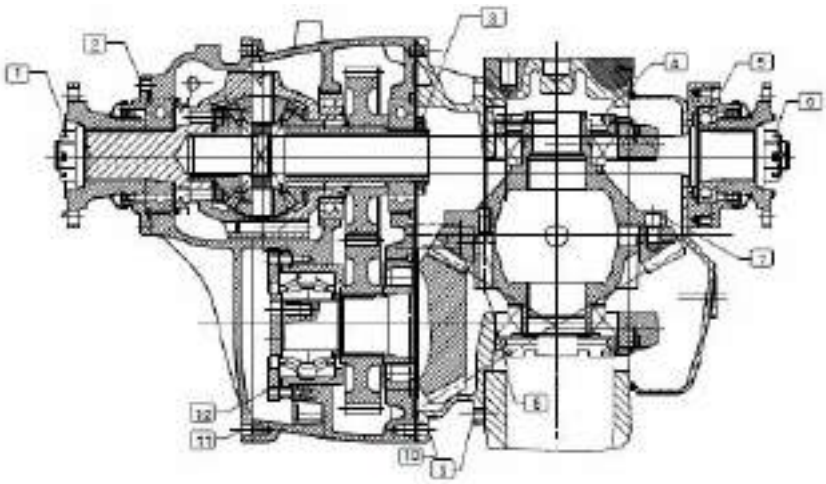

Tightening Torque

Description		Torque	
		Nm	kgm
1	Input flange nuts	750-800	75-80
2	Screws retaining the crest cover and the pass axle box cover	46	4.6
3	Slotted nuts of the hollow shaft	290-310	29-31
4	Round nuts of the differential housing	190-210	19-21
5	Screw retaining the bearing seat	48	4.8
6	Output flange nuts	750-800	75-80
7	Screws retaining the driven gear and differential housing	290-310	29-31
8	Screw retaining the left and right half differential housings	175-195	17.5-19.5
9	Nuts securing the middle section of the tandem axle to the axle housing.	83-95	8.3-9.5
10	Nuts securing the pass axle box and main retarder housing	83-95	8.3-9.5
11	Nuts securing the pass axle box and the cover housing	45-52	4.5-5.2
12	Nuts securing the pass axle box and hearing seat assembly	46-52	4.6-5.2

Figure 2

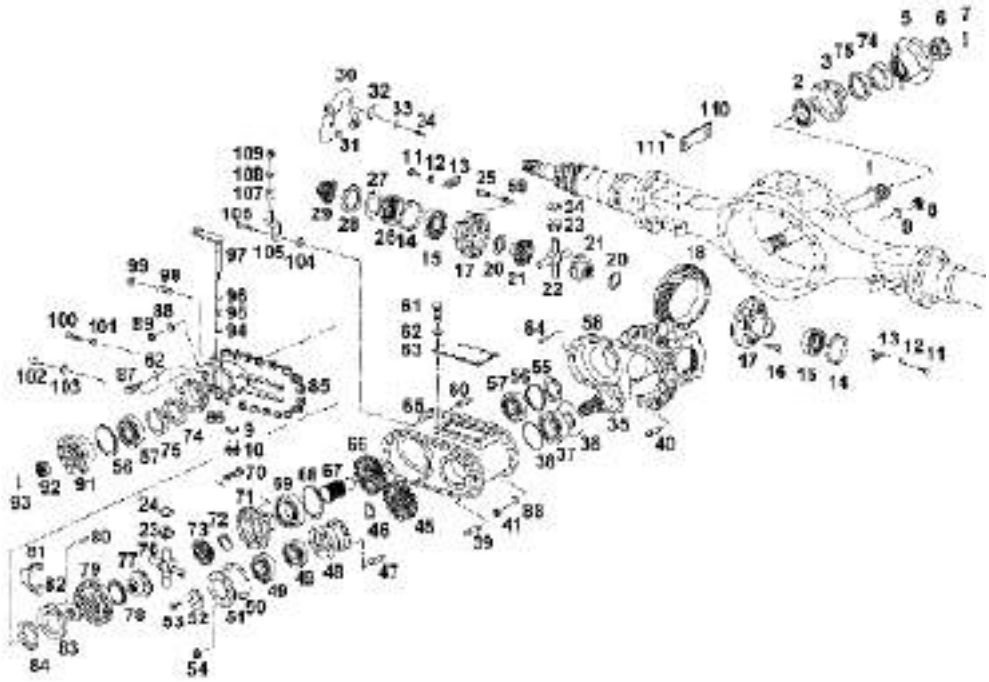

1 Tandem axle 2 single row radial ball bearing 3 bearing seat 5 flange ASSY 6 flange nut 7 split pin 8 plug 9 seal washer 10 magnetic plug ASSY 11 hexagon head bolt 12 spring washer 13 stop plate 14 differential bearing adjusting nut 15 tapered roller bearing 16 bolt 17 differential housing 18 driven bevel gear 20 adjusting shim 21 half axle gear 22 differential spider 23 planet gear assembly 24 planet gear gasket 25 hexagon head bolt 26 fixed engagement sleeve 27 lock-up washer 28 round nut 29 sliding engagement sleeve 30 shifting yoke 31 shifting yoke moving part 32 bending plate 33 hexagon nut 34 slotted set *screws* with cone point 35 drive bevel gear 36 oil baffling plate 37 roller bearing 38 steel wire circlip 39 stud bolt 40 stud bolt 41 I type hexagon nut 45 driven cylindrical gear 46 retainer 47 stud bolt 48 bearing seat 49 single row tapered roller bearing 50 adjusting shim 51 press plate of the bearing out cup 52 bearing press plate 53 hexagon head bolt 54 hexagon lock nut 55 slotted round nut 56 flattened steel wire circlip for shaft 57 radial ball bearing with stop groove 58 main retarder housing 59 anti-loosen keeper 60 stud bolt 61 hexagon head bolt 62 spring washer 63 oil dip plate ASSY 64 cylindrical pin 65 pass axle box 66 drive cylindrical gear 67 hollow shaft 68 spring washer for shaft 69 radial ball bearing with dust cover 70 hexagon head bolt 72 half axle gear (rear) gasket 73 half axle (rear) 74 planet wheel gasket 76 anti-loosen keeper 77 half axle gear (front) 78 half axle gear (front) gasket 79 differential housing assembly 80 differential lock pin 81 shifting yoke 82 shifting yoke moving part 83 check ring of the differential lock 84 interaxial differential gasket 85 pass axle box cover 85 pass axle box cover assembly 86 bearing case cover 87 hexagon head bolt 88 spring washer 89 hexagon nut 90 shaft sealing ring 91 flange ASSY 92 flange nut 93 split pin 94 spring collar for shaft 95 bushing 96 O type sealing ring 97 rocker arm ASSY of the differential lock 98 *Slotted* set *screws* with long dog point 99 hexagon nut 100 hexagon head bolt 101 hexagon nut 102 pin 103 steel wire circlip for shaft 104 spring washer 105 bracket assembly 106 hexagon head bolt 107 spacing sleeve108 plate washer 109 hexagon lock nut 110 vehicle axle

nameplate 111 plate rivet

Overhaul the intermediate axle ASSY

Removal and assembly of the hub retarder and brake section

(Similar to the rear axle)

Remove the middle section of the tandem axle

Note: Remove the half axle (by methods and procedures provided in the removal of the rear axle half axle) before removal of the middle section of the tandem axle.

Figure 3

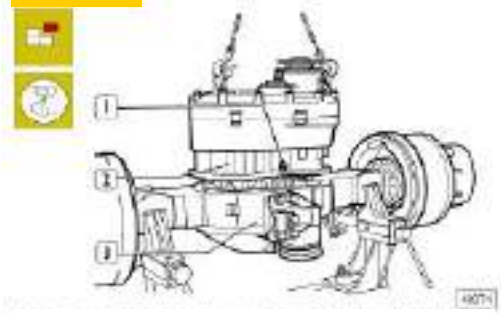

Loosen the self-locking nuts (1) connecting the intermediate reduction housing (2) to the vehicle axle

Remove the tandem axle assembly

Figure 4

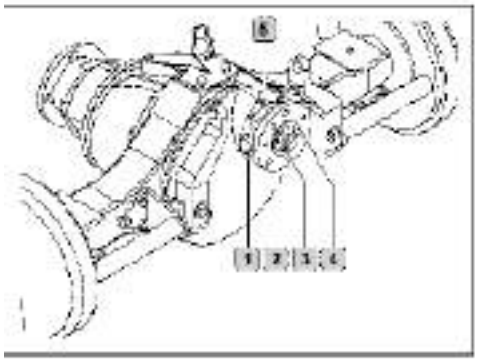

Straighten the split pin (4) with pliers and withdraw the split pin. Loosen the flange nuts (3) with a wrench and pull out the output flange (2) with a puller. Loosen the hexagon bolts (5) and spring washer, take out the bearing seat assembly (1)

Figure 5

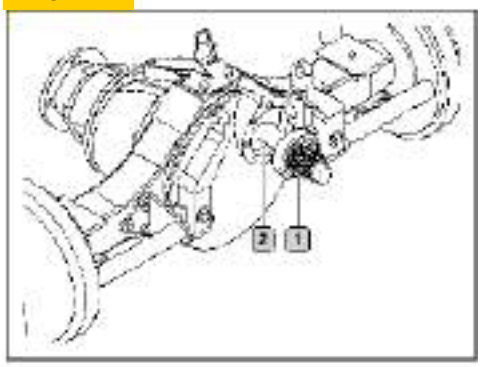

Extract the tandem axle (1) along with the bearing from the axle housing through the hole

Figure 6

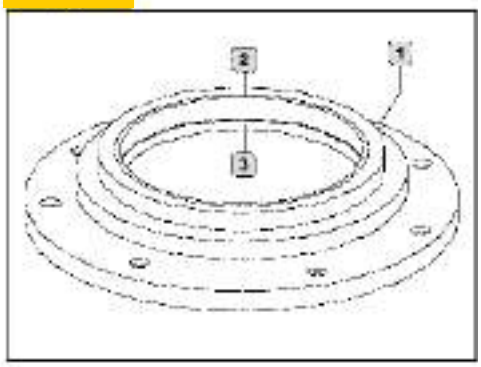

Press out the two shaft sealing rings (2 and 3) of the bearing seat assembly (1) with a punch

Figure 7

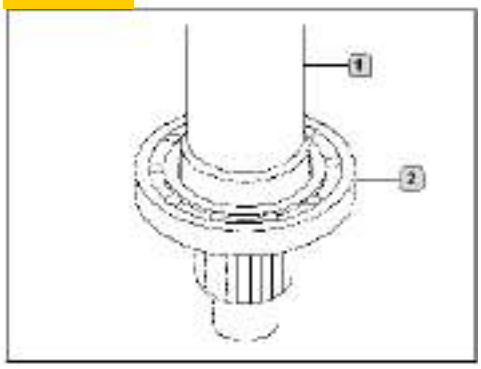

Push out the single row radial ball bearing (2) from the tandem axle (1) with a puller

Re-assemble the tandem axle bearing, clean the tandem axle, apply oil to the journal. Clean the inner bore of the single row radial ball bearing and tap it into place in the journal of the tandem axle with a press block.

Disassemble the middle section assembly of the

Figure 8

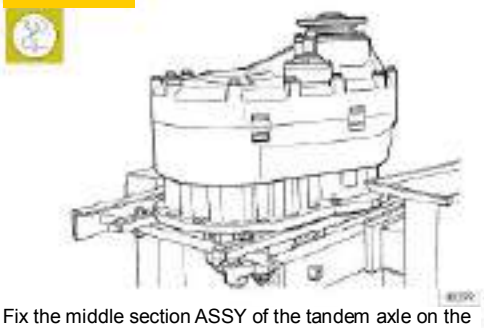

Fix the middle section ASSY of the tandem axle on the stand. Remove the magnetic plug ASSY, oil dip plate ASSY of the pass axle box cover and the control section of the interaxle differential lock.

Remove the box cover subassembly of the pass axle

Figure 9

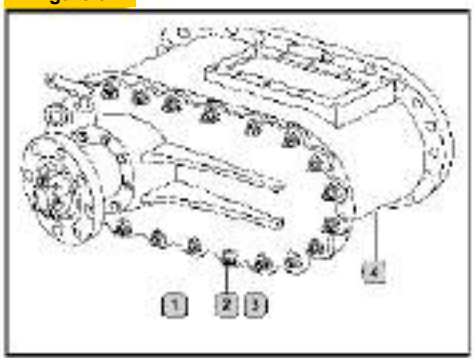

Loosen the hexagon nuts (2) and spring washer connecting the box cover (1) to the pass axle box (4), hook the input flange in the symmetrical holes by hoisting equipment, lift out the box cover of the pass axle

Figure 10

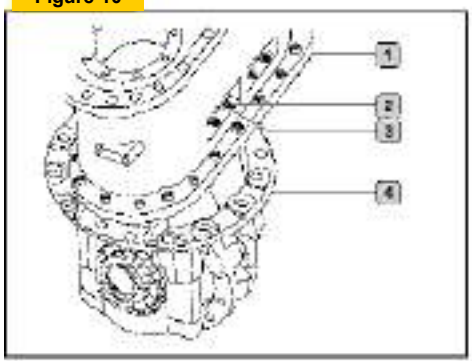

Loosen the hexagon nuts (2) and spring washer (3) connecting the pass axle box (1) to the main retarder

Remove the main retarder ASSy of the intermediate axle (the removing methods similar to that of the rear axle).

Remove the box cover subassembly of the pass axle box.

Figure 11

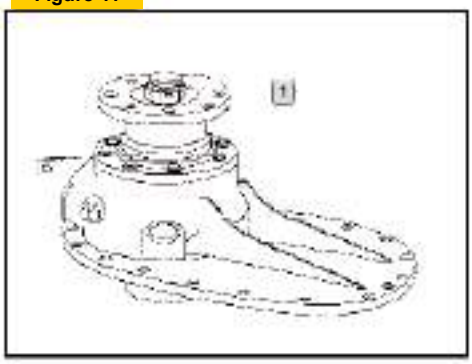

Straighten the split pin (1) with pliers and withdraw the

Figure 12

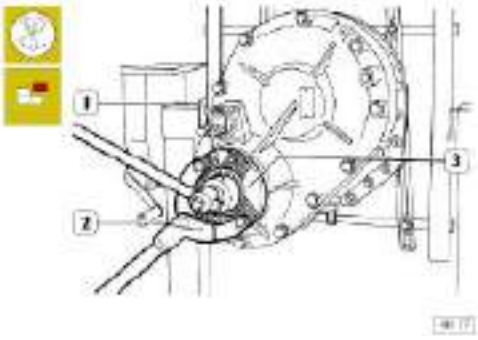

Use the reaction lever (2) and a universal (1) to loosen the flange nuts on the flange ASSY (3).Take out the flange

Figure 13

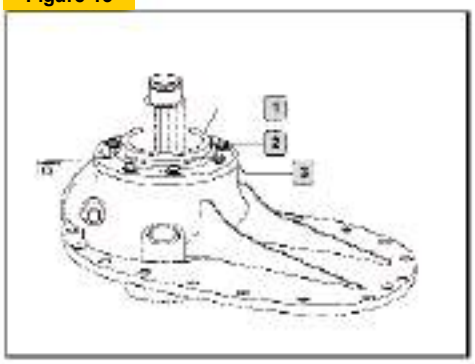

Loosen the hexagon head bolts (2) and spring washer (3), take down the cover assembly (1) of the bearing seat and

Figure 14

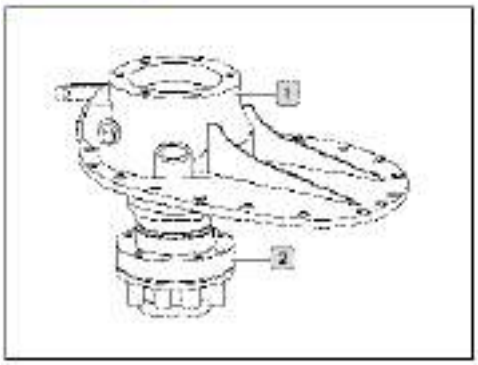

Take out the pass axle box cover (1) integrally.

Figure 15

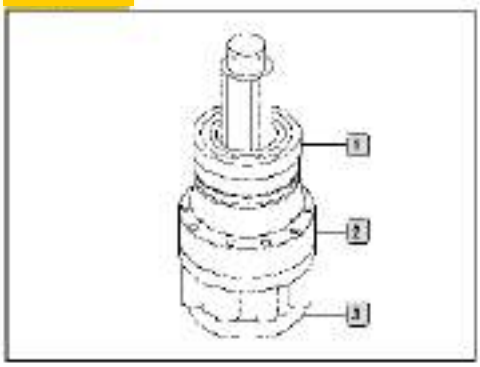

Take out the spring collar for the shaft (3) with pliers and the radial ball bearing (1) on the interaxle differential ASSY with a puller. Move out the gasket, locking ring and locking pin of the differential lock.

Figure 16

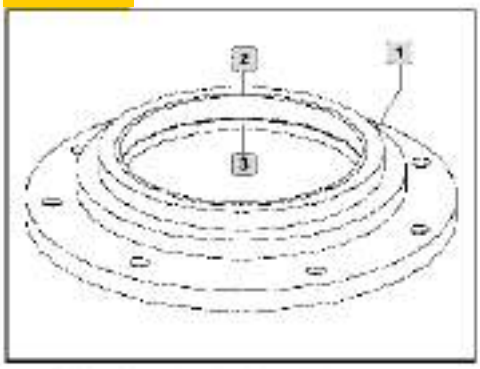

Press out the two shaft sealing rings (2 and 3) of the bearing seat cover assembly (1) with a punch.

Figure 17

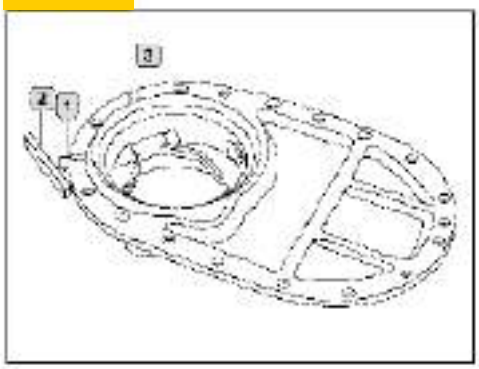

Remove the hexagon nuts and the slotted set screw with long dog point (1) securing the rocker arm shaft

Remove the box cover subassembly of the pass

Figure 18

Take down the stud bolts on the plane of the two sides of the pass axle box, remove the groove rolled onto the slotted round nuts with a punch and unscrew the slotted round nuts (1) with a wrench. Take out the hollow axle

Figure 19

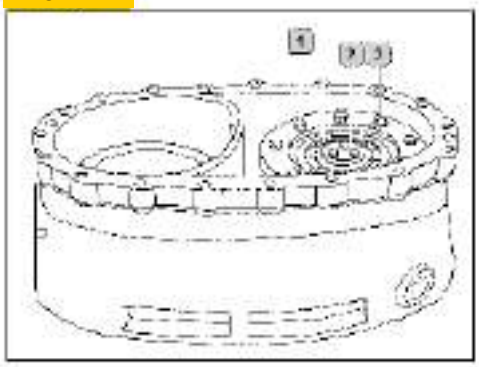

Remove the hexagon head bolts (3), bearing press plate (2) and the self-locking nuts (1).

Move out the bearing seat ASSY subassembly, adjusting shim and spacing ring. Take out the drive

Figure 20

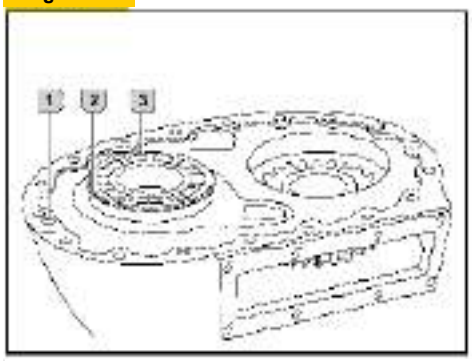

Take out the radial ball bearing with stop groove (3) with a punch. Take out the drive and driven cylindrical

Figure 21

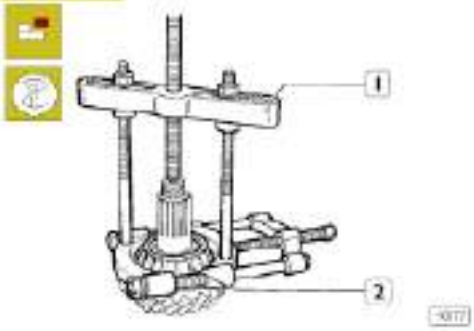

Take out the inner cup (2) of the roller bearing from the drive bevel gear and then the oil dip plate with a

Figure 22

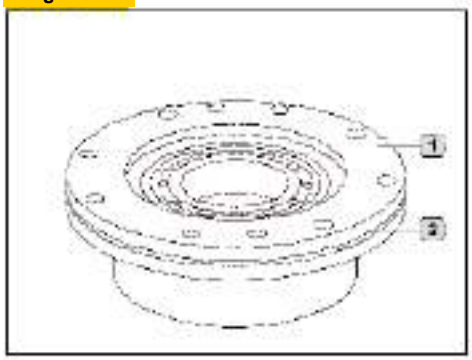

Take out the out cup press plate (1) of the bearing and adjusting shim (2), then press out the two single row tapered roller bearings with a press block.

Assemble the interaxle differential subassembly

Figure 23

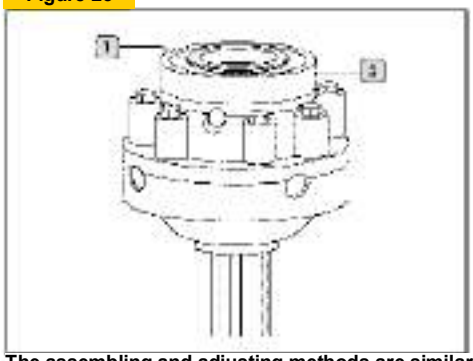

The assembling and adjusting methods are similar to those of the rear axle interwheel differential.
Note: Don't reverse assemble the radial ball bearing with dust cover (2); the end with the dust cover faces outside. Insert the spring collar for the shaft (1) into the differential housing groove with pliers.

Figure 24

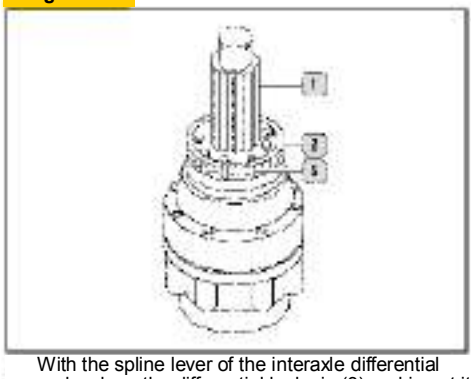

With the spline lever of the interaxle differential upwards, clean the differential lock pin (3) and insert it onto the locking ring (2) of the differential lock. Then assemble the differential ASSY (1); the locking ring of the differential lock slides flexibly if it's assembled in

Assemble the cover assembly of the bearing seat

Figure 25

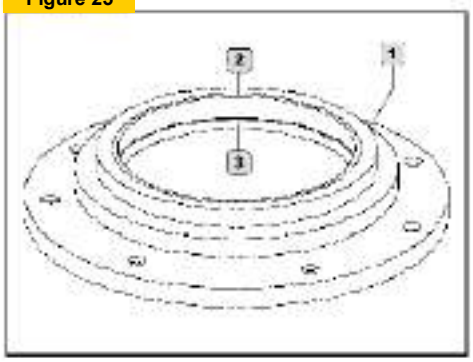

Take the bearing seat cover (1) and burring and clean up. Clean the shaft sealing rings, apply oil to the outer round surface, slowly press in the single lip sealing ring (3) and then the double lip sealing ring (2). After leveling calibrated with a press block, apply lubrication

Note: The lips of the shaft sealing rings face the big end

Assemble the box cover subassembly of the pass axle box

Figure 26

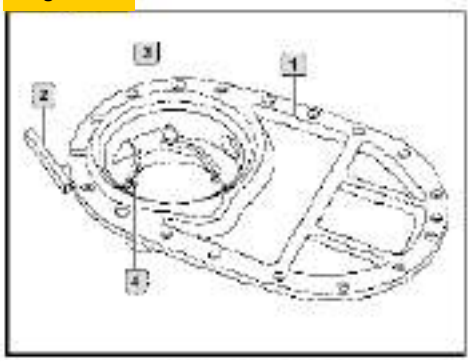

Clean the pass axle box cover (1), successively assemble O type sealing ring and bushing onto the rocker arm ASSY (2) of the differential lock, then lock up with the spring collar for shaft. Pass the cylindrical end of the differential lock rocker arm, shifting yoke (3) assembled on the rocker arm of the differential lock. After the circular groove on the bushing is aligned to the screw bores on the box cover, fix the slotted set screws with dog points and lock up with hexagon nuts. After the bore surface of the pass axle box cover is coated with sealant, insert the bowl-shaped plug into it. Attach the shifting yoke moving parts (4) to the shifting yoke inside the pass axle box cover.

Figure 27

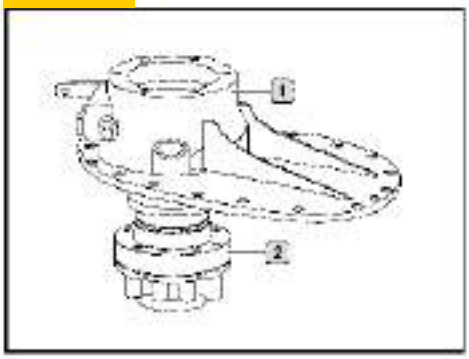

Attach the mounted pass axle box cover (1) onto the differential ASSY (2).

Figure 28

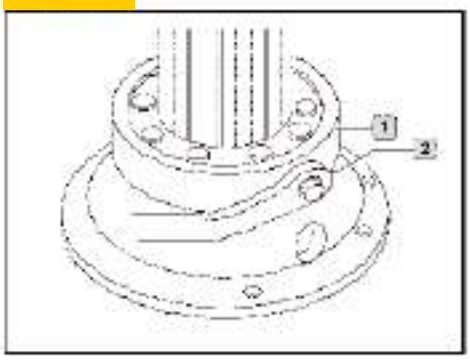

Telescope the shifting yoke (2) into the locking ring

Figure 29

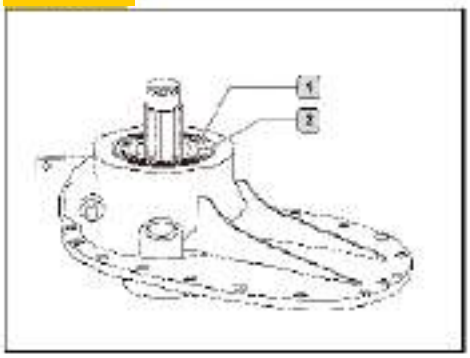

Successively attach the gasket of the interaxle differential housing and the radial ball bearing with snap groove (2) onto the journal of the differential

Figure 30

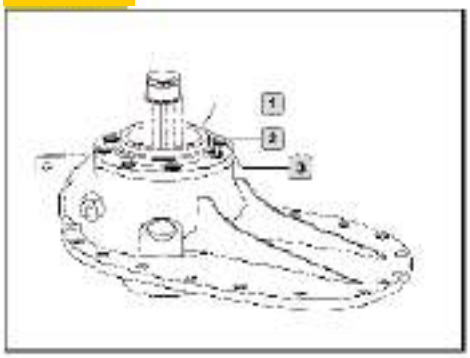

Evenly apply sealant to the mating surface of the end cover assembly (1) and tap-mount in place. Fix the spring washer (3) and hexagon head bolts (2), tighten

Figure 31

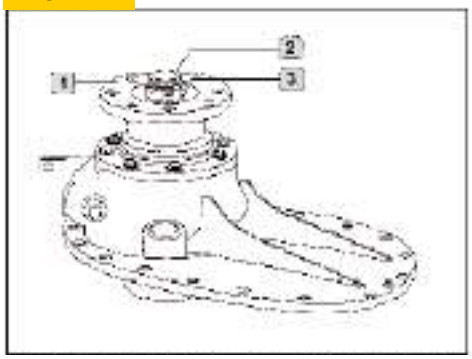

Clean the lever section of the spline and apply oil to it. Tap-mount the flange ASSY (1) onto the lever section (2) of the spline in place. Fix flange nuts (3) onto the

Figure 32

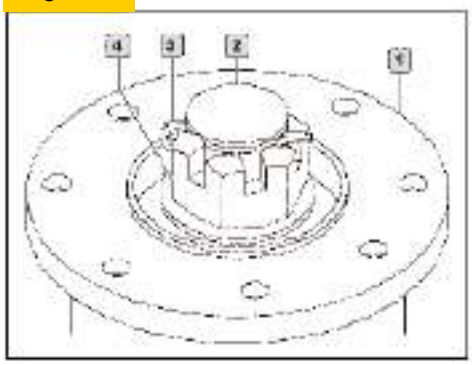

Fit the split pin (3) into the pin bore on the differential housing (2) and the top and bottom of the pin opening and lock up the flange nut (4) with the long edge under the input flange (1) spigot.

Figure 33

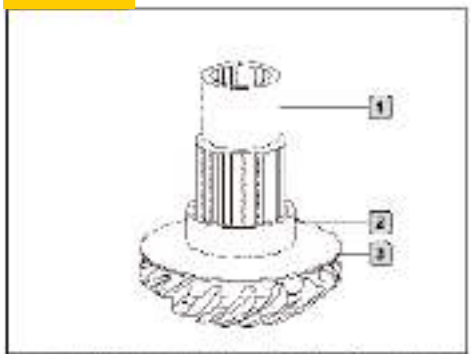

Clean up the drive bevel gear (1).Get the oil dip pan (3), press-mount onto the journal of the drive gear shaft with the flange upwards. Apply oil to the journal of the drive gear shaft and put it inside the inner cup (2) of the

Assemble the subassembly of the bearing seat ASSY

Figure 34

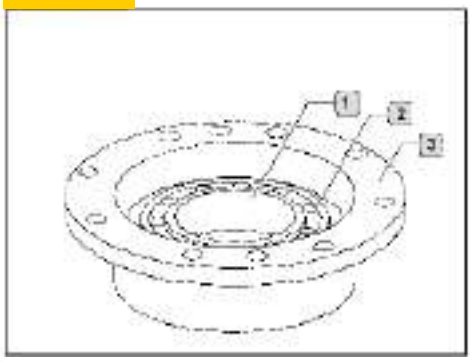

Clean the inner surface of the bearing seat (3) and apply oil, put the outer cup (2) of the single row tapered roller bearing inside the bearing seat with the big end

Figure 35

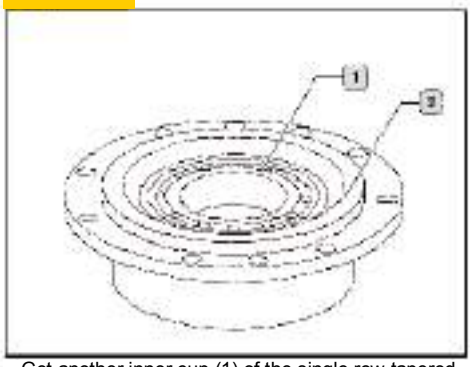

Get another inner cup (1) of the single row tapered roller bearing and put inside the bearing seat with the tapered small end upwards. Its outer cup (2) should be pressed in place slowly after leveling calibration with a

Figure 36

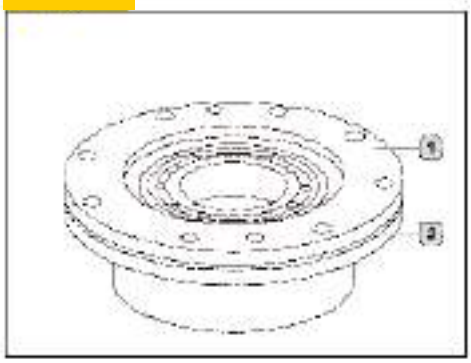

Pre-choose an adjusting shim (2) of 2.5mm thickness and place it on the big plate surface of the bearing seat with the press plate (1) of the bearing outer cup fixed on the bearing seat, set tight with two (processing) screws. Make sure the pre-tightening torque is 1-2N.m by increasing or decreasing the adjusting shim. When

Figure 37

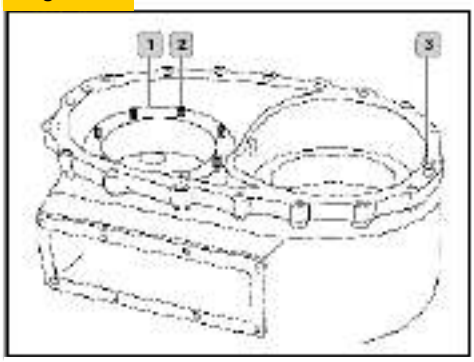

Put the pass axle box hang mount onto the assembly platform, de-burr and clean up. Take the stud bolts (2), apply anaerobic glue axially to the end with fewer thread teeth, fix and tighten the bolts into the eight

Figure 38

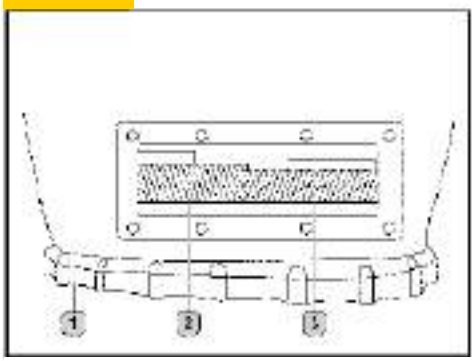

Turn the pass axle box (1) 180°, put in the drive cylindrical gear (2) and the driven cylindrical gear (3) through the observing hole. Note: The higher step

Figure 39

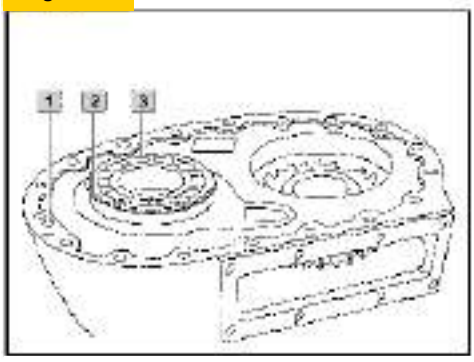

Clean the cylindrical pin (1) and tap it in place into the positioning pin bore of the pass axle box. Clean up the bearing bore on the pass axle box and apply oil onto it. Clean up the radial ball bearing with a snap stop groove, attach the flatted steel wire circlip (2) onto the stop groove of the radial bearing (2) and press the ball

Figure 40

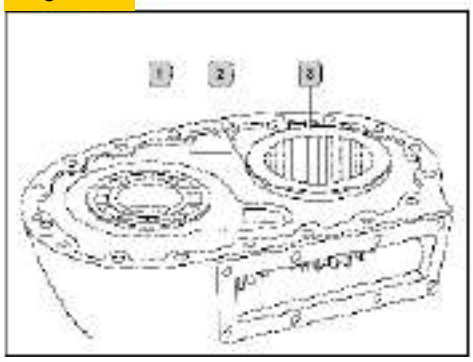

Take out the bearing outer cup from the drive bevel gear assembly, assemble the steel wire circlip (2) onto the bearing outer cup (3) of the drive bevel gear and

Figure 41

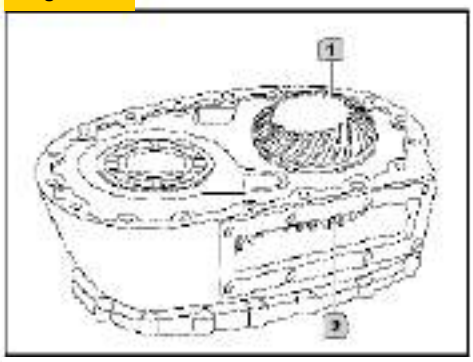

Pass the assembly shaft (1) of the drive bevel gear through the inner spline bore of the driven cylindrical

Figure 42

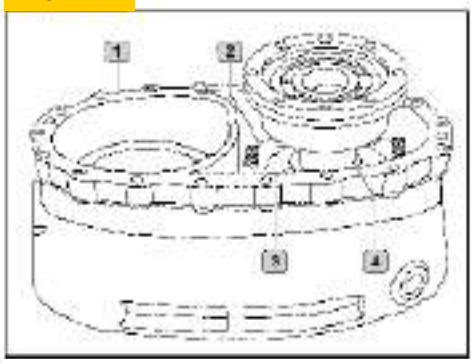

Turn the pass axle box (1) a 180°, attach the spacing washer (3) onto the drive bevel gear shaft (4), select suitable adjusting shim (2) as needed, fix it onto the stud bolts on the pass axle box. Then fix the bearing seat assembly, symmetrically tighten with self-locking

Figure 43

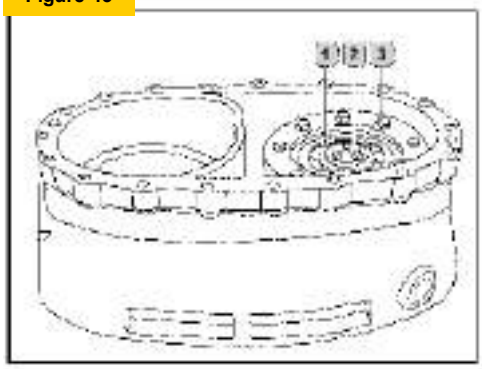

Detach the two (processing) screws on the bearing seat. Assemble the bearing press plate (2) onto the

Figure 44

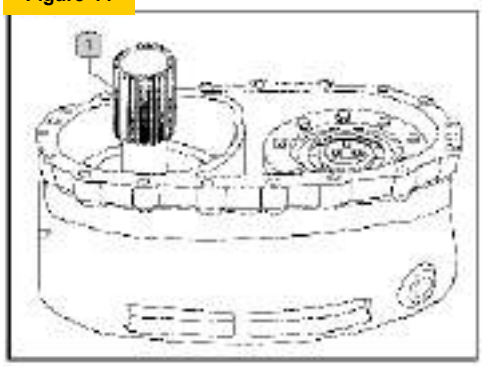

Clean the hollow shaft (1) and pass it through the drive cylindrical gear and bearing inner bore.

Note: Make sure not to damage the bearing when

Figure 45

Turn the mounted pass axle box assembly 90°, apply oil to the thread section of the hollow shaft (2) and fix with slotted round nuts (1). The tightening torque is 290-310N.m.Press the slotted round nuts and roll over

Figure 46

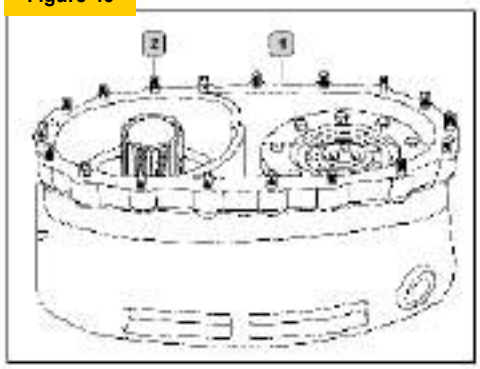

Take stud bolts (2), apply anaerobic glue to the end with fewer thread teeth and screw inside the bolt bore on the box body. (1) Turn the pass axle box over and

Assemble the main retarder ASSY of the intermediate axle (the assembling methods are similar to those of the rear axle)

Assemble and adjust the pass axle box assembly

Figure 47

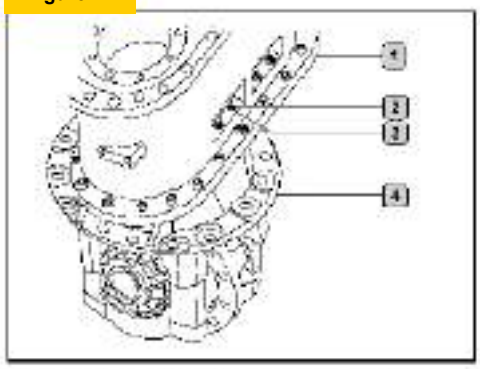

Hook mount the pass axle box ASSY (1) onto the main retarder ASSY (4), fix spring wash (3) and hexagon nuts

Measure and adjust the engaging backlash and meshing mark of the drive and driven bevel gear set (the methods are similar to those used for the rear axle).

Assemble the pass axle box cover assembly

Figure 48

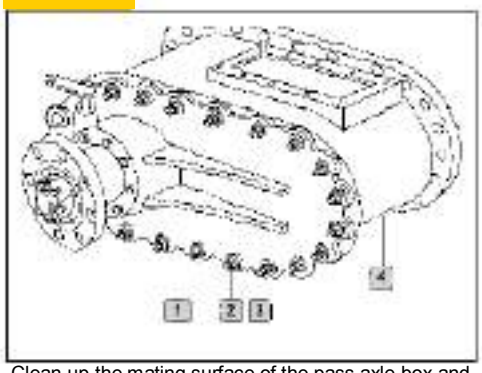

Clean up the mating surface of the pass axle box and evenly apply sealant to it, hook mount the cover assembly of the pass axle box (1) onto the pass axle box assembly (4), tap in place with a brass bar. Fix the spring washer and hexagon head bolts (2) onto the stud bolts (3), tighten in symmetrical crosswise order with a tightening torque of 45-52N.m.

Figure 49

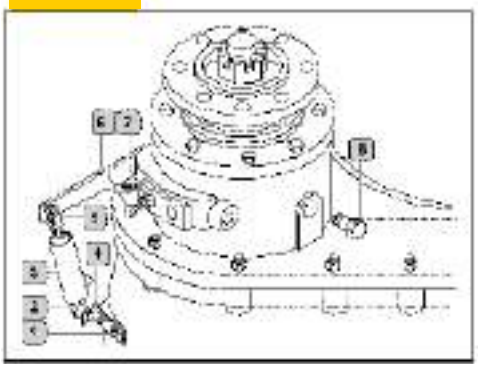

Take hexagon head bolts (1) and spring washer, mount the bracket ASSY onto the pass axle box and tighten. Successively mount onto the bracket ASSY the spacing sleeve (2), slave cylinder (3), plate washer and hexagon lock nuts. Lock the yoke knuckle of the slave cylinder and rocker arm ASSY of the differential lock in place by ES tack pin (5).Fix the sealing washer and magnetic plug ASSY (8) onto the pass axle box cover.

Fix the hexagon nuts (7) onto the hexagon head bolts (6) and then screw inside the box cover, the hexagon head bolts stick to the shifting yoke plane, tighten the hexagon nuts if the shifting yoke waors normal when moving the rocker arm. Clamp the steel wire circlip for shaft on the pin and mount it inside the bore, fix the sealing washer and pressure switch successively and tighten in place.

Figure 50

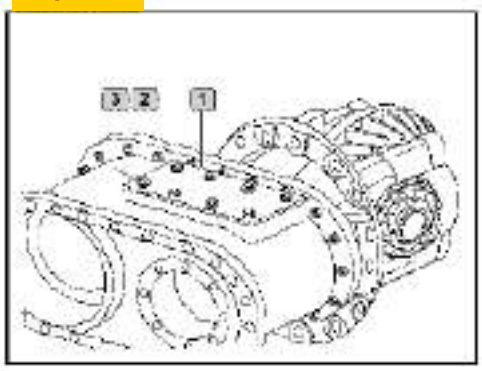

Apply sealant to the edges of the oil dip plate (1) evenly and tighten to the pass axle box with a spring washer (3) and hexagon head bolts (2) to torque of 45-52N.m.

Assemble middle section of the tandem axle

Figure 51

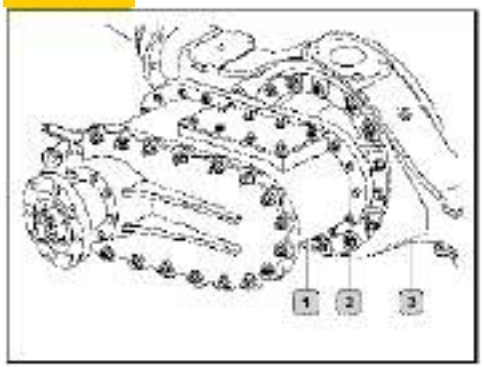

1. Carefully clean the mating surface and apply sealant to the big surface of the axle housing.
2. Hook mount the middle section (1) of the tandem axle onto the axle housing (3), softly tap in place.
3. Fix the self-locking nuts (2) and evenly tighten symmetrically; the torque is 83-95N.m.

Assemble the tandem axle assembly

Figure 52

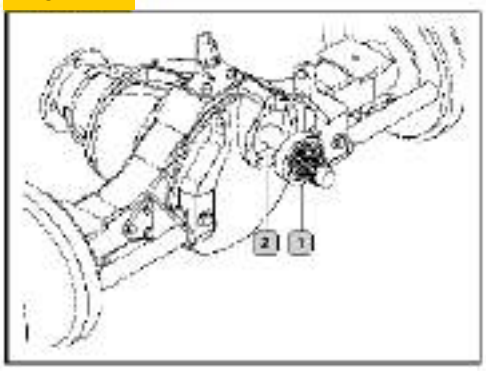

Secure the axle ASSY, positioning the through-hole (2) in a level position and clean the mounting area. Get the tandem axle assembly (1) and clean up, tap mount it in

Figure 53

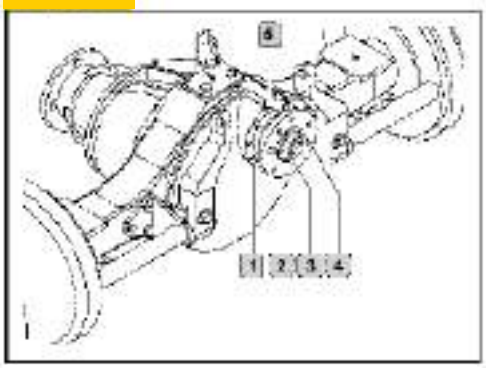

Apply sealant to the mating surface of the bearing seat assembly (1) and mount it onto the through-bore seat of the axle housing with a spring washer and hexagon head bolts (5); the torque of the bolts is 48N.m.Mount the output flange (2) in place on the spline of the tandem axle, then fix with flange nuts (3). Tighten to a torque of 750-800N.m.Fix the split pin (4) and lock

Chapter 7

Suspension

Page

Front suspension

Description

Front suspension

The front suspension system is comprised of parabolic or semi-elliptical leaf springs with double-action hydraulic shock absorbers.

Figure 1

Rear suspension

4X2 vehicle: Parabolic or semi-elliptical leaf springs with double-action hydraulic shock absorber.

6X4 vehicle: overhang-type leaf springs and stabilizer bar.

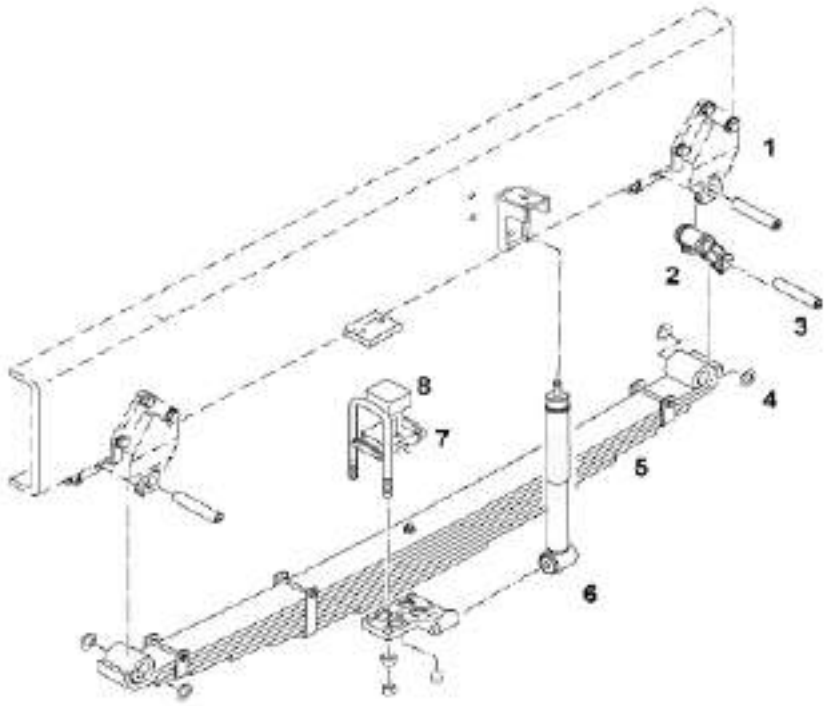

Front suspension components

1. shackle bracket 2. shackle 3. leaf spring pin 4. clearance adjusting gasket 5. steel leaf spring 6. shock absorber 7 leaf spring pressure 8. rubber stopper

Rear suspension

Figure 2

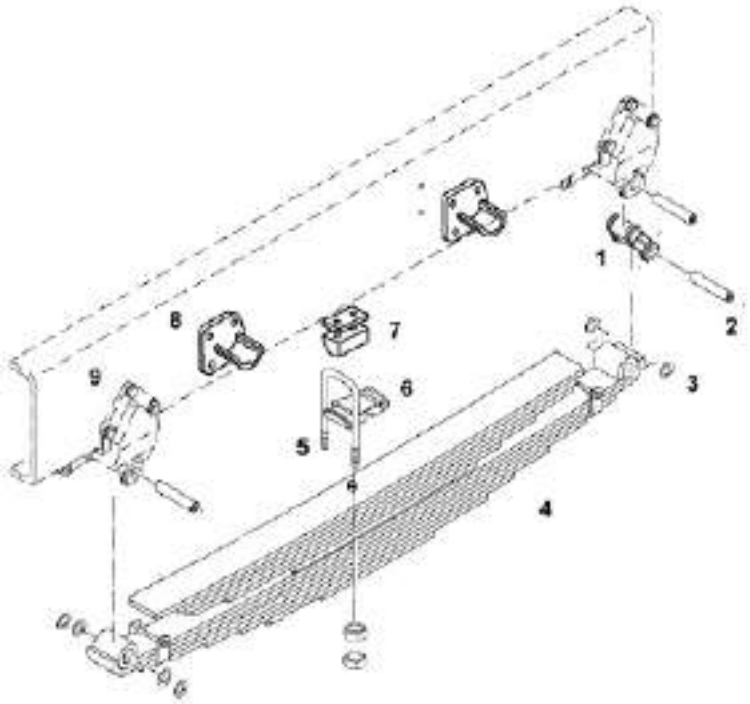

Rear suspension components

1. shackle 2. leaf spring pin 3. clearance adjusting gasket 4. steel leaf spring 5. U bolt 6. press piece 7. rubber stopper 8 limited support 9. shackle bracket

Balancing shaft ASSY

Figure 3

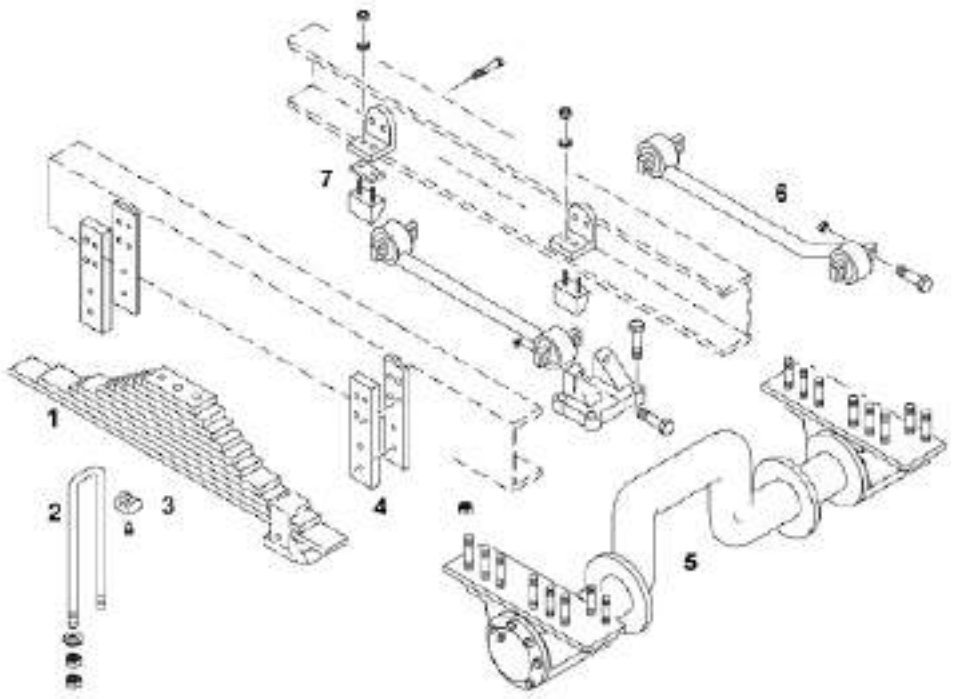

Rear suspension with balance suspension

1. steel leaf spring 2. U bolt 3. leaf spring press piece 4. side position limited plate 5. balance shaft ASSY 6. thrust lever 7. rubber stopper

Steel leaf spring

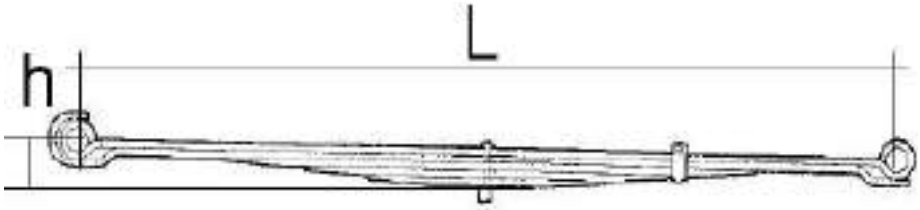

Specifications and Data

Front suspension:4X2 – 6X4 vehicles

Serial No.	Item	Specification
1	Parabolic steel leaf spring (width/thickness/piece)	90/22/9
2	Arc length L of the spring (measured at the bore center)	
3	Leaf spring arc height H	3
4	Inner diameter of the pin bore	25
New leaf spring check data		
	Flexibility mm/KN	4.2±6%

Rear suspension: 4X2 Vehicle

Serial No.	Item	Specification
1	Parabolic steel leaf spring (width/thickness/piece)	110/22/9
2	Arc length L of the spring (measured at the bore center)	
3	Leaf spring arc height H	
4	Inner diameter of the pin bore	25

Rear suspension: 6X4 Vehicle

Serial No.	Item	Specification
1	Parabolic steel leaf spring (width/thickness/piece)	110/22/9
2	Arc length L of the spring (measured at the bore center)	
3	Leaf spring arc height H	

Shock absorber

Shock absorber			
	Length between rubber bush mounting surfaces:		
	extended	720±3	720±3
	Compressed:	410±3	412±3
	Travel	310	308

Common defaults and troubleshooting

1- Noisy suspension;
2- Vehicle pulls to one side;
3 - Excessive flexibility of the suspension;
4 - Squeaking, knocking, abnormally excessive noise

1 Noisy suspension;

Insufficient lubrication	Yes →	Lubricate thoroughly.
No ↓		
Shock absorbers noisy or inefficiency.	Yes →	Check and if necessary replace the shock absorber.
No ↓		
Wheel bearings worn, causing excessive play.	Yes →	Renew the bearings or adjust play.
No ↓		
Leaf spring shackles loosen.	Yes →	Check the shackle fastness and replace any loosened pins or bolts if necessary.
No ↓		
Leaf spring ASSY loosening caused by broken central bolt.	Yes →	Overhaul the leaf springs and change the central bolts and self-locking nuts.
No ↓		
Leaf spring ASSY loosening caused by broken pins of the spring clamps.	Yes →	Leaf spring ASSY loosening caused by broken pins of the spring clamps.

2 Vehicle pulls to one side

Tire pressure is incorrect.	Yes →	Check and inflate the tires to specified pressure.
No ↓		
Front wheel alignment incorrect.	Yes →	Check and adjust the front wheel alignment.
No ↓		
Front wheel bearing play adjustment incorrect.	Yes →	Adjust wheel bearings.
No ↓		
Inefficient hydraulic shock absorbers.	Yes →	Install a new shock absorber.
No ↓		
Broken leaf springs.	Yes →	Overhaul leaf spring and change new components if necessary.
No ↓		
Incorrect load distribution.	Yes →	Distribute load evenly over the loading bed.

3 Excessive flexibility of the suspension;

Leaf spring central bolt broken. — Yes → Mount new bolts.

No ↓

Spring leaves over-stressed or broken. — Yes → Overhaul the leaf spring and replace damaged parts or the complete spring as necessary.

4 Squeaking, knocking, abnormally excessive noise

Leaf spring mount loose. — Yes → Check the mounting and if necessary change the loosened shackle pins.

No ↓

Leaf spring ASSY loosening caused by broken central bolt. — Yes → Overhaul the leaf springs and change the central bolts and self-locking nuts.

No ↓

Leaf spring ASSY loosening caused by broken pins of the spring clamps. — Yes → Check the leaf spring clamps and replace the pins.

No ↓

Wheel bearings worn caused excessive play. — Yes → Change the bearings
Adjust wheel bearing play.

No ↓

Excessive wear or play of bearings at central pivot of overhang type suspension. — Yes → Change new bearings and/or adjust axial clearances of bearings.

Tighten torque

Description	Torque	
	Nm	**(kgm)**
U bolt M of the front steel leaf spring	460±50	(46±5)
U bolt of the rear steel leaf spring	710±70	(71±7)
M14 nuts	180±20	(18±2)
M16 nuts	275±25	(27.5±2.5)
M20 nuts	437.5±42.5	(43.7±4.2)

Tools

Tool No.		Description
99305117		Pneumatic circuit inspection instrument
99321024	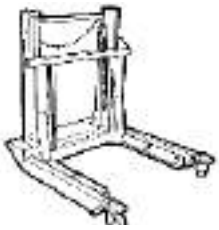	Hydraulic jack for wheel removal and reinstallation
99327001	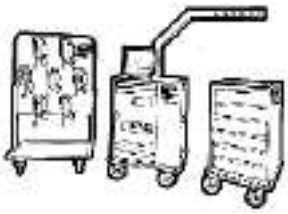	Modus station
99327030		Hydraulic trolley to wheel removal and installation
99331016		Single tester enclosure with multimeter and current clamps
99341003	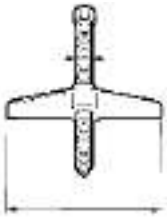	Single-action lifter

Tools

Tool No.		Description
99341011	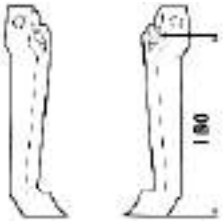	A pair of bracket
99341015	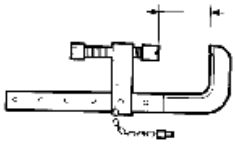	clamps
99341035	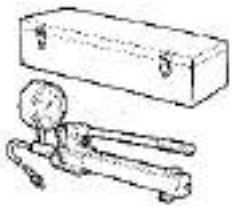	High pressure pump for assembling of suspension pivots and shackles
99345055		Adapter plate to use with pullers
99346001		Standard installer (used with specified bushing)
99346004		Threaded bush (used with 99346001 and 99363245)

Tools

Tool No.		Description
99346049	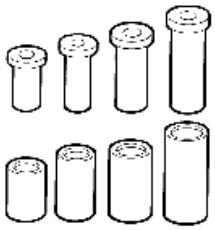	Tool for disassembling and assembling the stabilizer bar and the flexible blocks on leaf springs.
99346238 ◆		Sliding sleeve for installing inner race of angular contact roller bearing (used with specified bushings)
99346242 ◆ ◆		Sliding sleeve for installing inner race of angular contact roller bearing (used with specified bushings)
99346243		Sliding sleeve for installing inner race of angular contact roller bearing (used with specified bushings)
99346247	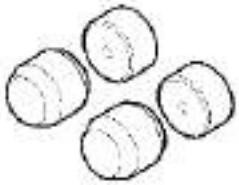	Reference buffer for ECAS suspension adjustment
99346246	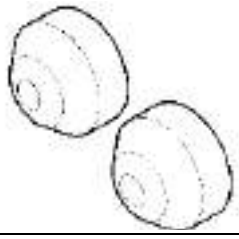	Reference buffer for ECAS suspension adjustments (Low Tractor only).To be used for rear axles with 99346247.

Tools

Tool No.		Description
99363245		Threaded bush (used with 99346001 and 99346004)
99363296 ◆	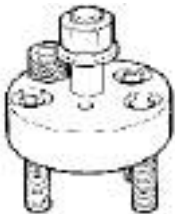	Tool fixed to bearing spindle for installing inner race of angular contact bearing (used with 99346001 - 99346004 - 99346238 -99346243 - 99363245)
99363309 ◆ ◆	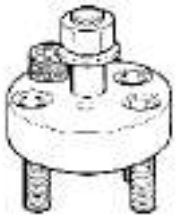	Tool fixed to bearing spindle for installing inner race of angular contact bearing (used with 99346001 - 99346004 - 99346242 -99346243 - 99363245)
99370007		Interchangeable driving handle for bearing installer
99374094	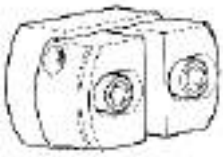	Installer for outer bearing races (134 to 215) (used with 99370007)
99374119 ◆		Installer for spring seat oil seal

Tools

Tool No.		Description
99374131◆◆		Installer for spring seat oil seal

▣ Vehicles with 21 tons suspensions (outer diameter of central pivot 88 mm)

▣▣ Vehicles with 32 tons suspensions (outer diameter of central pivot 120 mm)

500410 Front leaf spring removal and reinstallation

Removal

Park the vehicle on even ground, put the hand brake valve in the braking position and block both in front of and behind the rear wheels with scotches.
Deflate the tire that needs to be removed to pressure below the required pressure.
The removal operations can't be carried unless operators are standing on the side of the tire.
Take off the tire nut cap, loosen the front wheel retaining nuts. Note: Only loosen the nuts.
Lift the vehicle front axle by a jack with suitable load capacity, place the safety stools under the left and right longitudinal beams (in front of the steel leaf springs) to support after the vehicle is lifted, pay attention to the balance.
Loosen the wheel retaining nuts and remove the tire.
Before removing the leaf springs, place a hydraulic jack at a suitable position to support the front axle to prevent the front axle from turning over.
Then, lower the hydraulic jack that is placed under the front axle until the leaf spring tension is released.
Remove the first pedal of the cab (5) to avoid operation interference, remove screws (4), operate from under the vehicle and take down the whole leaf ASSY:

NOTE: Be cautious of personal injury during the operation process.

- Disassemble the U bolt (7)
- Remove the nut to lock the leaf pin and tap the pin with a brass bar.
- Loosen fastener (8) and remove the shock absorber (13) from the suspension;
- Remove the leaf spring (9).

Reinstallation

For reinstallation, please follow instructions stipulated below and reverse the steps for removal.

Check the thread of the brackets connecting leaf springs to the front axle; if faults are found, restore thread (operation 500412), or replace brackets.

NOTE: Correctly align the cover (2) springs clamping to the mark (12).
Tighten screws (10) with their head oriented inwards.
Check stop spring buffers condition; if they are worn seriously, replace them (operation 500417).

Tighten nuts to specified torque.

Figure 25

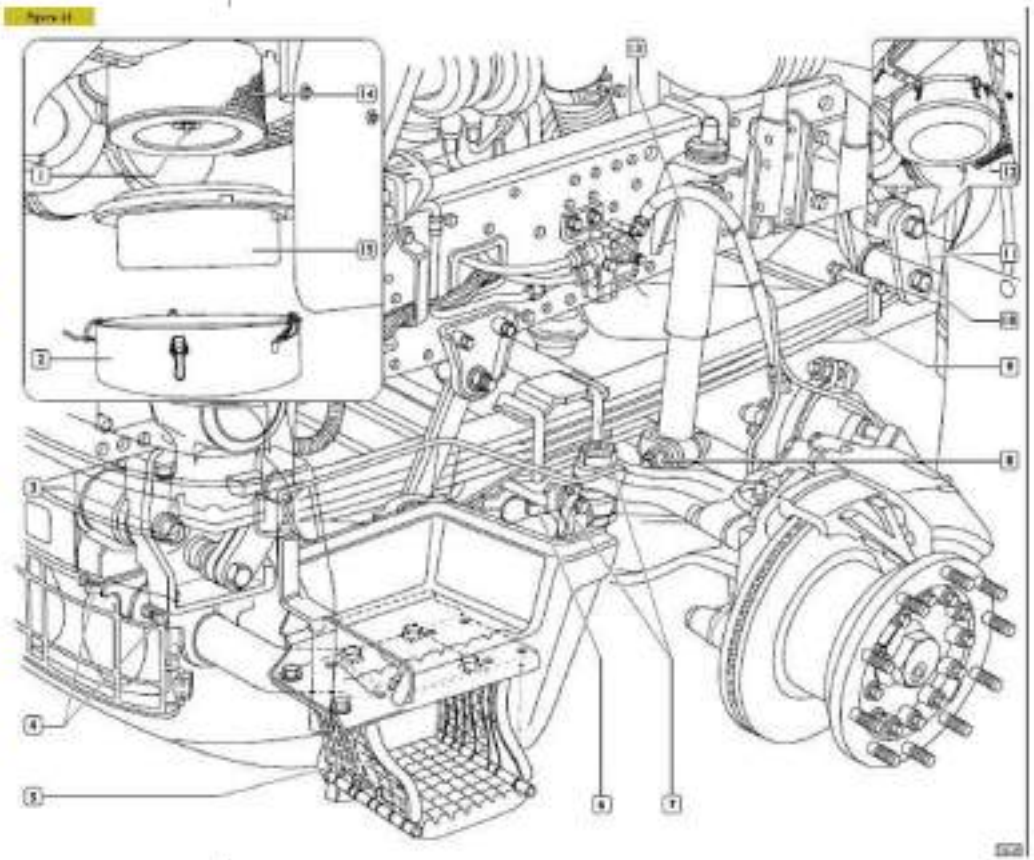

500410 rear leaf spring removal and reinstallation (4X2)

Figure 27

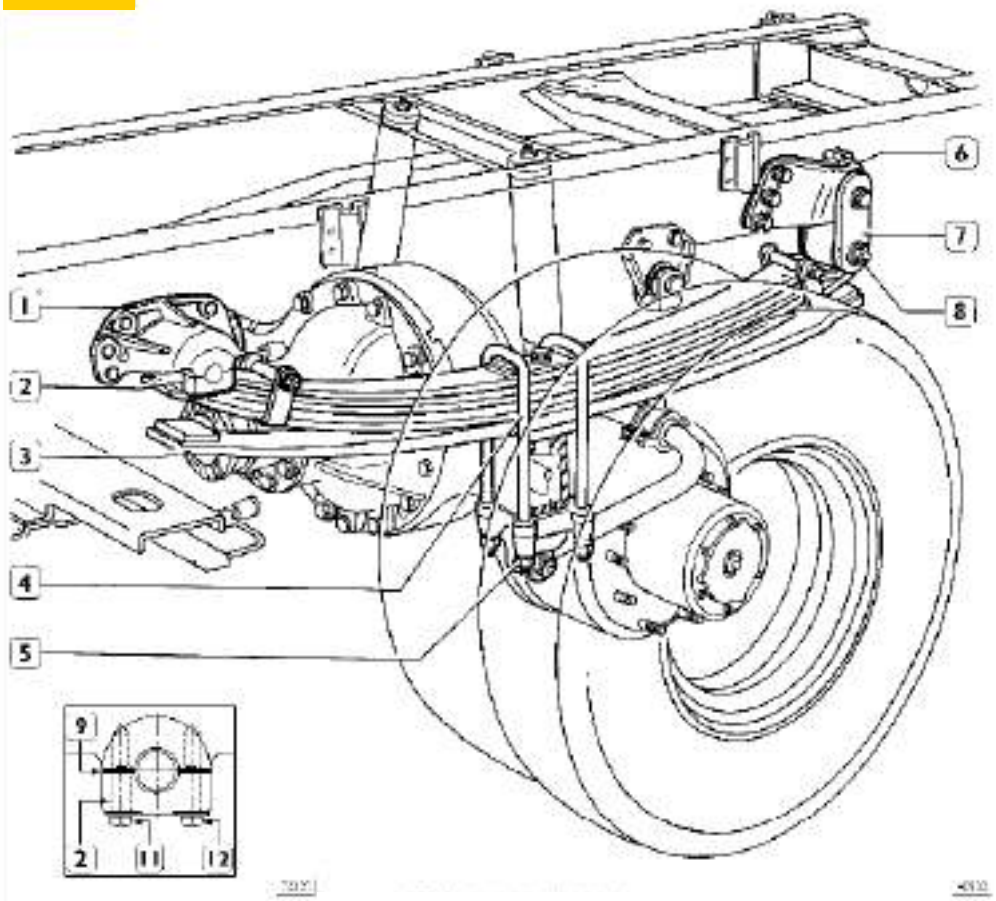

Rear suspension with parabolic leaf springs

Removal

Park the vehicle on level ground and block the front wheels. Raise the vehicle by a hydraulic jack, and support the chassis on two stands.

Remove the wheel with the hydraulic trolley 99321024.

Take off nut (5) and pull out the U bolt securing the leaf spring (3) to the axle.

Position trolley 99306064 under the leaf spring and connect the leaf spring to the trolley with the specified brackets.

Remove bolts (11 and 12) and detach the cover (2) along the gasket (9) that fixes the spring shackle pin to the front shackle (1); unscrew nut (8) and pull out the shackle pin

Reinstallation

Carry out the removal operations in reverse order, complying with the following instructions:

Inspect the threads on the U-bolts that secure the leaf spring to the axle; if damaged, restore the threads (operation 500412) or change the U-bolts.
Check the condition of the rubber bump stops and change them if deteriorated (operation 500417).

Tighten all nuts to the stipulated torque settings.
To tighten the down cover (9), firstly tighten bolt (10) to the required torque, insert spacer (8), and then tighten bolt (11) without a spacer.

-Removal and reinstallation of the balanced suspension (6X4)

Figure 28

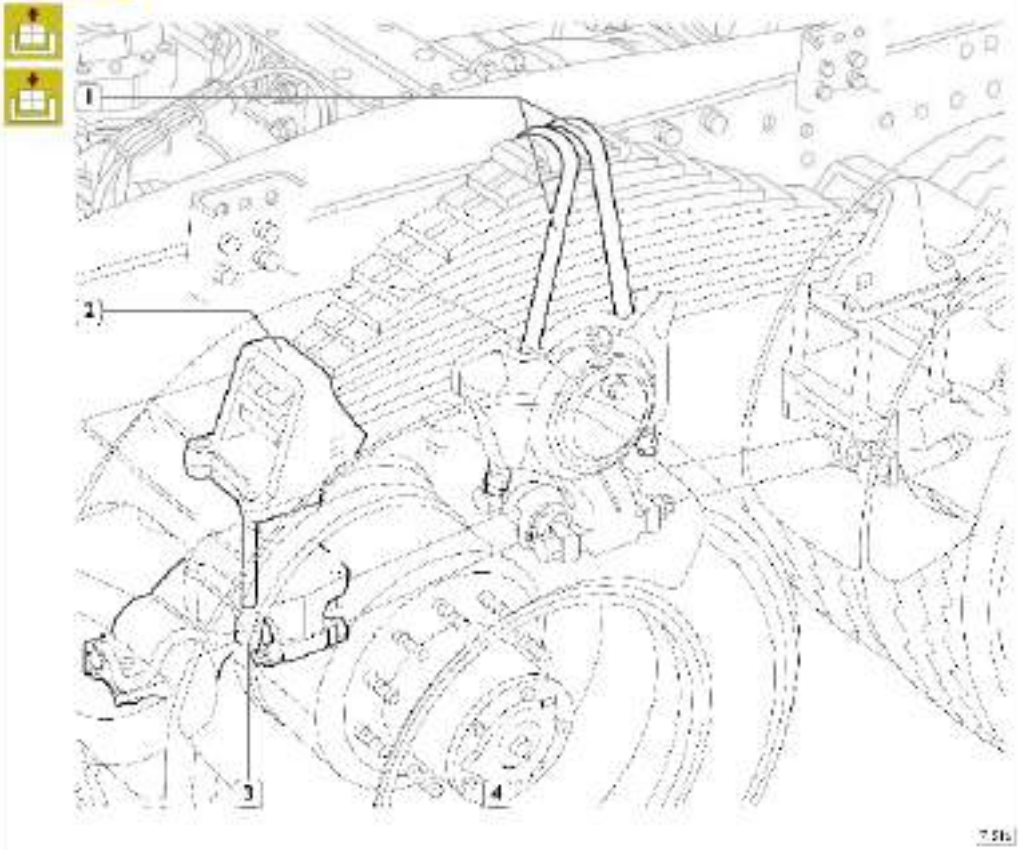

Removal

Park the vehicle on level ground, block the front wheels and loosen the rear wheel nuts.

Position the bracket 99370617 on a hydraulic jack, then place the jack under the axle and raise the rear of the vehicle. Support the chassis frame and the intermediate and rear axles on stands, while making sure that the bracket maintains contact with the axle.

Remove the wheel nuts and remove the wheels using the hydraulic trolley 99321024.

Remove the nuts (5) of the U-bolts (1) securing the leaf spring (6) to the central pivot.

Remove the bolts (3) and detach the draw bar mounting

Reinstallation

Complying with the following instructions, reverse the steps of removal for reinstallation.

Check the threads of the U bolt securing the leaf springs to the vehicle axle.
If they are mildly damaged, please restore the threads (Operation 500452) or change new U bolt.
Assemble the sliding block and the draw bar mounting bracket as described on page 51.

The mounting procedures of the leaf spring seat and thrust lever lower bracket

Figure 29

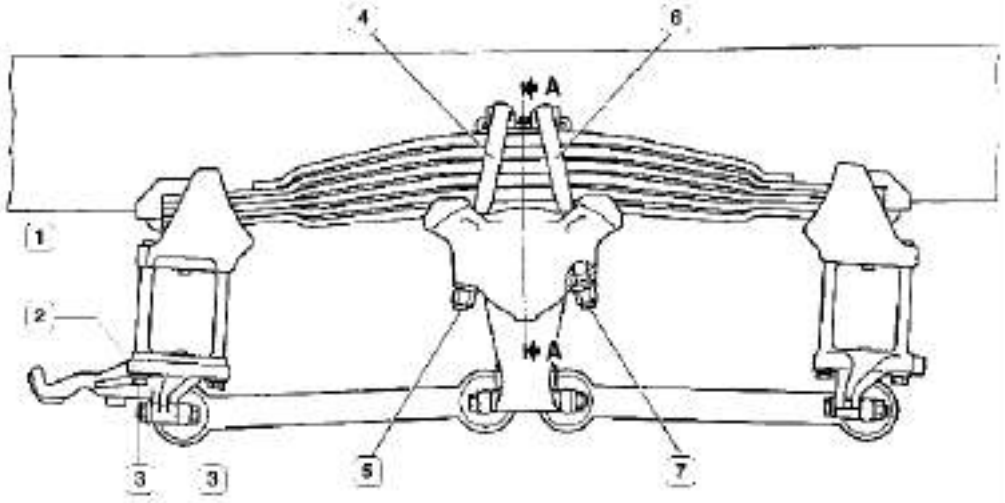

- Apply lubricating grease to the threads of the spring seat (1);
- Apply resin to the hole of the lower thrust lever bracket (2) connecting to the bolt contact surfaces;
- After component alignment, pre-tighten bolts (3) in cross-wise sequence to a torque of 100 Nm;
- Finally tighten bolts (3) to a torque of 420 Nm.

U bolt

- Tighten the leaf spring (4 and 6) clamping nuts (5 and 7) as followings:
- Tighten nuts (5) to a torque of 300 to 500 Nm
- Tighten nuts (7) to a torque of 750 to 900 Nm
- Tighten nuts (5) to a torque of 750 to 900 Nm

Balanced suspension

(6x4)

500440 emoval and reinstallation of the central pivot

500442 emoval and reinstallation of the central pivot shaft section

500443 hange the bearings

500449 emoval and reinstallation of the shackle bracket

Figure 30

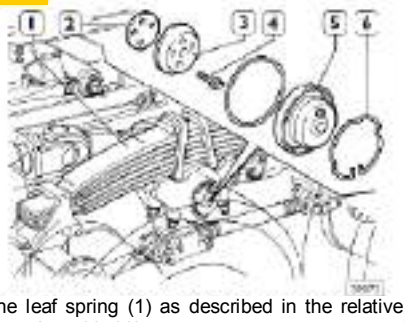

Remove the leaf spring (1) as described in the relative section (operation 500430).

Raise the front of the vehicle and support it on stands to keep the chassis frame level.
Take off the spring clip (6) and remove the cover (5).
Unscrew the bolts (4) and remove the plate and the down adjustment spacer (2).

Fig31

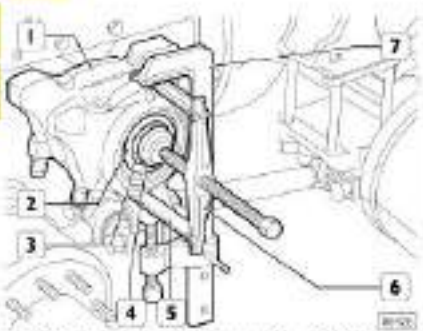

With tools 99341011 (5), 99341003 (6), 99341015 (7) and reaction block 99345055 (4), pull the balancing shaft head (1) of the bearing cup (2) from shaft (3).

Removal of the shaft section of the balanced shaft

Figure 32

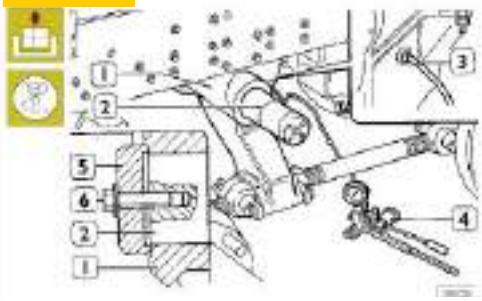

Loosen the bolt (6) by one full turn.

Do not remove the bolt (6) and plate (5) as these will prevent the shaft (2) from violently rushing out from the bracket during the subsequent operation.

Removal of the shackle bracket

Connect the pipe (3) of the hydraulic pump 99341035 (4) to the hole in the shackle bracket (1); operate the pump to separate the shaft (2) from the mounting (1).
Remove the bolt (6) and plate (5) and pull out the shaft (2) from the mounting (1).

Figure 33

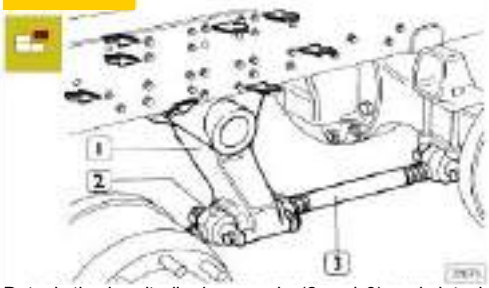

Detach the longitudinal con rods (2 and 3) and detach the mounting (1).If the upper bracket (1,Figure 37) is to be replaced, remove the retaining bolts (⇒) and detach it from the chassis side beam.

Change the bearings

Figure 34

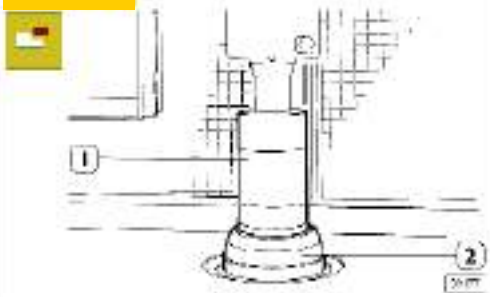

Pull out the inner bearing cup (2) of the central pivot shaft (1) by a pressure device

Figure 35

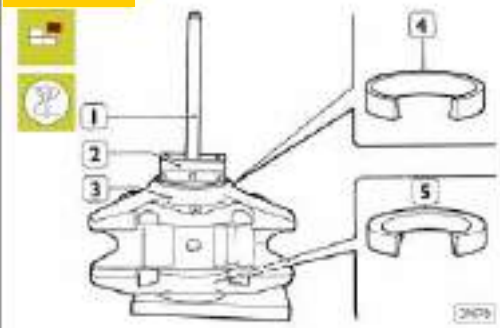

Remove the outer cup of the bearing (4 and 5) from the central pivot with suitable bearing removal tools.

To reinstall the bearings, use tool 99374094 (2) with a press, partially insert the bearings into the central pivot (3).

Complete the installation with a mallet and driving

Figure 36

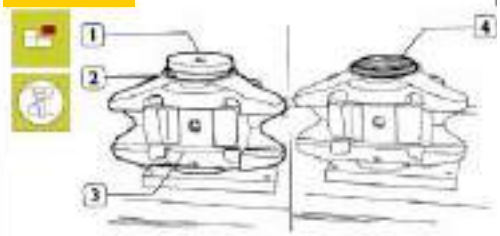

Install the seal (2) in the central pivot (3) by installer (1) 99374119 or 99374131.

Then fix the ring (4)

Reinstallation of the shackle bracket

Figure 37

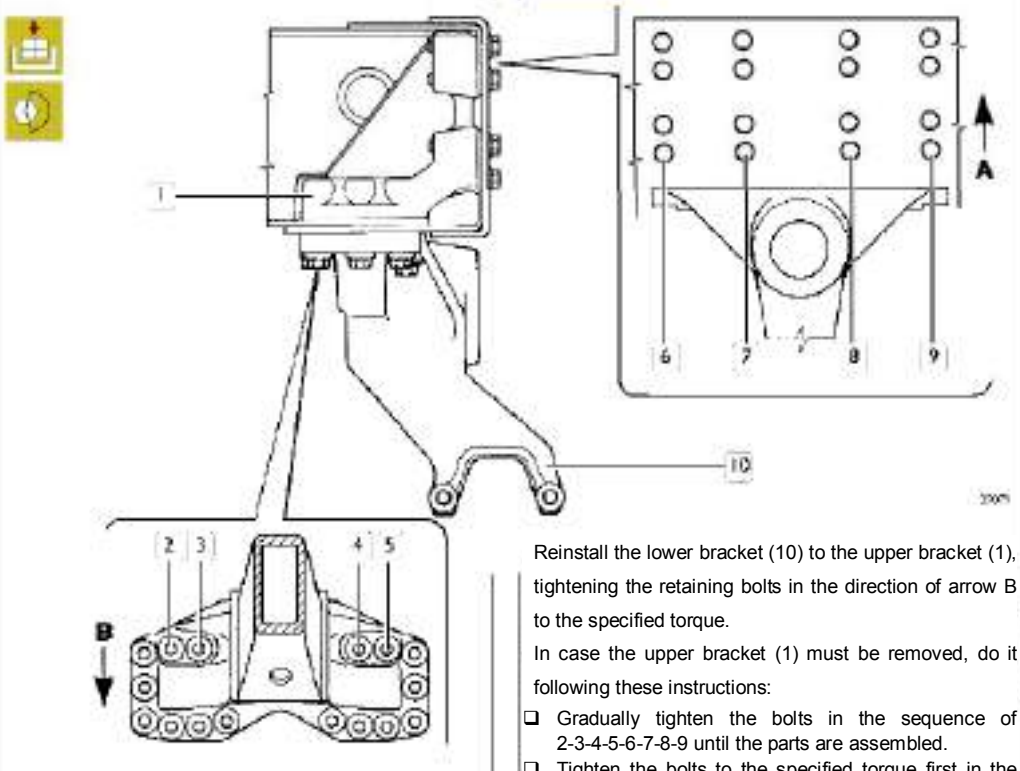

Reinstall the lower bracket (10) to the upper bracket (1), tightening the retaining bolts in the direction of arrow B to the specified torque.

In case the upper bracket (1) must be removed, do it following these instructions:

- ❑ Gradually tighten the bolts in the sequence of 2-3-4-5-6-7-8-9 until the parts are assembled.
- ❑ Tighten the bolts to the specified torque first in the direction of arrow A and then of arrow B;
- ❑ Re-tighten the bolts to the specified torque in the direction of arrow A.
- ❑ Tightening torque for bolts securing lower bracket (10) to upper bracket (1): 395 to 590Nm;
- ❑ Tightening torque for bolts securing upper bracket (1)

Reinstallation of the shaft section of the balanced shaft

Figure 38

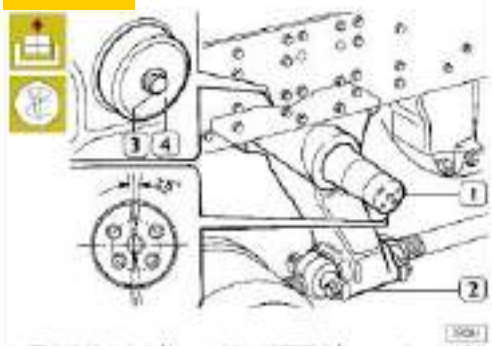

Insert the shaft (1) in the shackle bracket (2) in the hole direction as shown in the figure; position the plate (4) on the bracket (2) and secure it to the shaft (1) with the bolt (3).

Figure 39

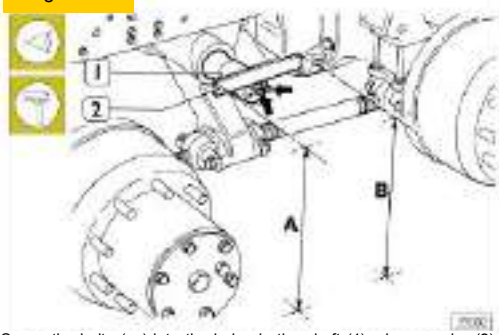

Screw the bolts (⇒) into the holes in the shaft (1); place a ruler (2) along the top of the bolts and check that the distance from A and B to the ground is equivalent to that of Biff not, adjust by turning the shaft (1).

Figure 40

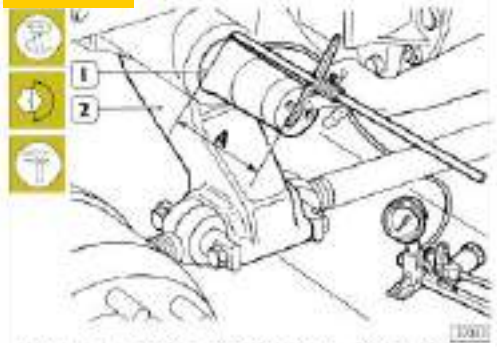

Secure the shaft (1) against rotation and tighten the bolts (3, Figure 36) to a torque of 50 Nm. Measure the distance A between the end of the shaft (1) and the shackle bracket (2).
The distance measured must be within the range indicated in the table in Figure 41.

Figure 41

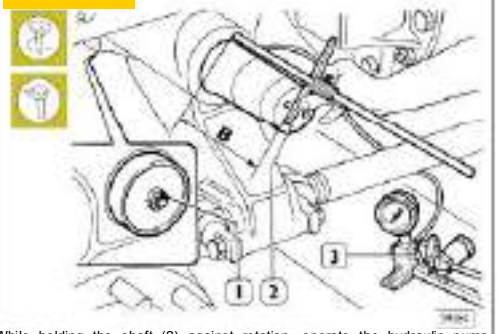

While holding the shaft (2) against rotation, operate the hydraulic pump 99341035 (3) and simultaneously screw in bolt (1) until the end of the shaft (2) is positioned at distance B from the bracket.
The distance B must be equal to A-C, where A is the previously measured distance and C is the value indicated in the table. The distance B must be within the range indicated in the table.

Measurement	Outer diameter of shaft end (2)	
	88 mm	120 mm
A	217.5 ÷ 220.5	211.5 ÷ 215
B	213.5 ÷ 216.5	205 ÷ 208.5
C	$4.5^{+0.5}$	$6.5^{+0.5}$

For procedures of shaft end installation, the oil reaches a pressure between 800 and 1300 bar.

Having obtained distance B, open the drain valve of the hydraulic pump 99341035 and wait at least 10 minutes before tightening the bolt (1) to a torque of 830 to 665 Nm (83 to 66.5 Kgm).Disconnect the pump tube from the shackle bracket and plug the oil filler.

Reinstallation of the central pivot

Figure 42

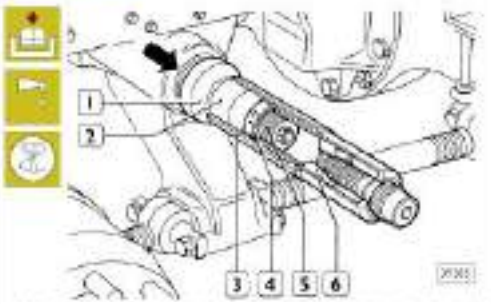

Lubricate the oil seal (⇒) with TUTELA MR3 grease and fix it to the shaft (2).Attach tools 99346238 or 99346242 (3), 99363296 or 9936330 (4), 99363245 (5), and 99346004 (6) to the shaft (2) as shown, installing the inner bearing (1).

Figure 43

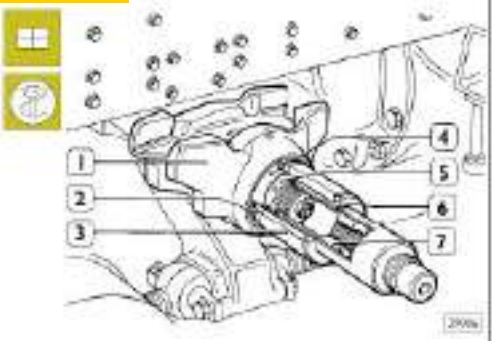

Assemble the central pivot (1) to the shaft (4) and attach tools 99346243 (3), 99363296 (5), 99363245 (6), 99346004 (7) and 99346001 (8), to the shaft (4) as shown, installing the inner cup of

Note: For the final procedure of the installation operation, it's necessary to tap the central pivot (1) with a mallet to ensure that the inner cups of the bearing seats are fixed correctly in their respective housings.
Remove the installation tools from the shaft.

Figure 44

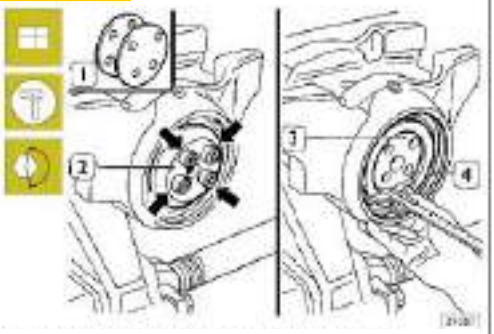

Determine the thickness S of the bearing axial play adjustment spacer (1) as followings:

- Apply the plate (2) and tighten the retaining bolts (⇒) to a torque of 30 Nm;
- Remove the bolts (⇒), remove the plate and measure the distance between the end of the shaft (3) and the bearing inner cup (4):
  Bulging from shaft A:
  Concave from shaft -A
- Measure the concave of the plate surface (1) as shown in Figure 34:Distance B.

The thickness S of the adjustment spacer is given by:
S=B+C - (± A).
A and B are the measured distances and C is the radial clearance of the bearings (0.1 to 0.3 mm).
Then assemble: Adjustment spacer of the calculated thickness and the plate (2), and tighten the retaining bolts (⇒) to a torque of 240 Nm. Assemble the leaf spring and tighten the u-bolt nuts in the manner described on page 51.

Figure 45

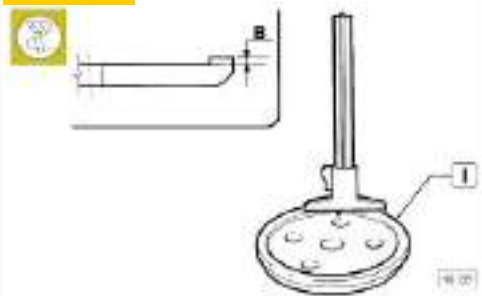

Tap the central pivot a few times in the direction of the shaft axis, then check that the pivot can freely rotate 180°; if not, increase the thickness of the adjustment spacer by 0.1 mm.

Figure 46

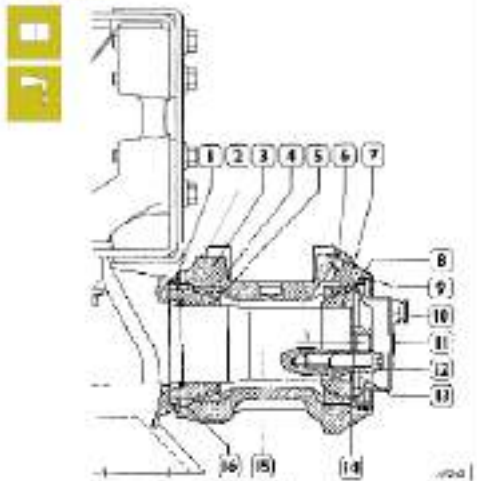

Central pivot components

1. oil seal 2. oil seal 3 balanced shaft head 4 outer cup of the inner bearing 5. inner cup of the inner bearing 7. inner cup of the outer bearing 8. oil seal 9 spring clamp 10. plug 11. cover 12. bolt 13. fixed flap 14. adjustment spacer 15. shaft 16. sealing part

Installation : Lubricate the oil seal (8) with TUTELA MR3 grease and position the plug (10) of the cover to the top. Secure the cover (11) to the central pivot (3) with a spring clamp (9).Remove the plug (10) and pour in TUTELA GI/A oil until it flows out of the hole (quantity ~ 0,5 l).

Inject Tutela MR2 grease into the grease nipple located on the shackle bracket: Complete the suspension reinstallation procedure as described on page 50.

28913 emoval and reinstallation of the thrust lever

Removal

Remove the retaining nuts or bolts (⇒) of the longitudinal arms (1, Figure 48) or triangular arms (1, Figure 47), and remove the arms.

Reinstallation

For installation please reverse the steps of removal. Tighten the nuts/bolts to the specified torque.

Triangular arm is installed in 4X4 – 6X4 -8X4 vehicles with air suspension.

Figure 48

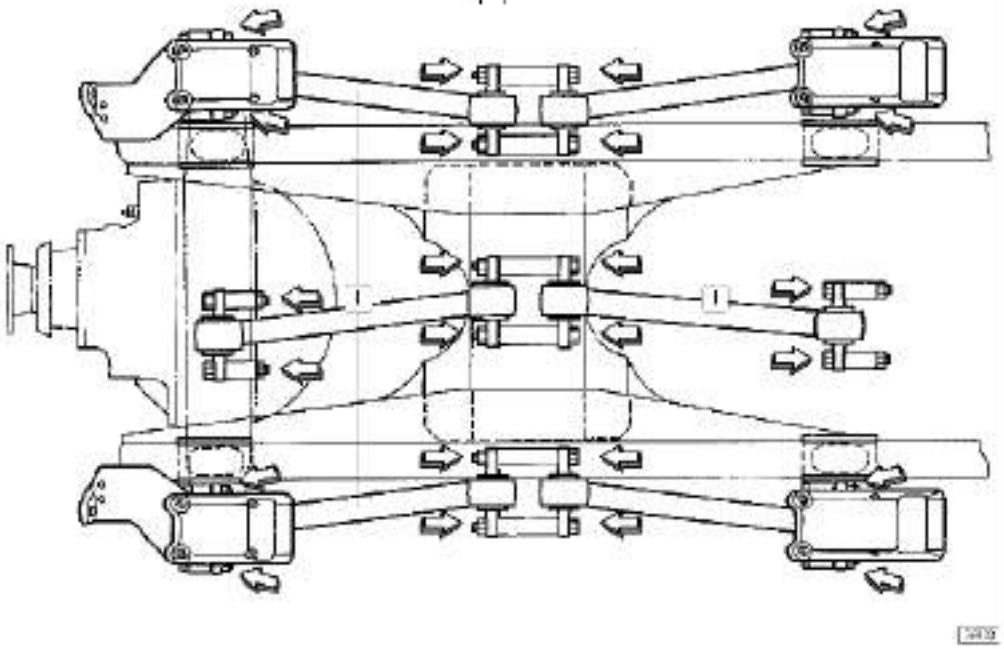

Balanced suspension assembly diagram

Change the flexible pin of the thrust lever

Figure 49

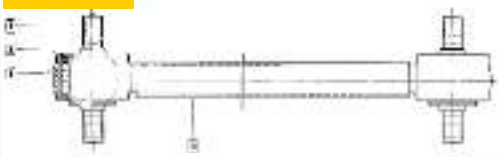

Thrust lever arm

Removal

Impress the flexible section of the pin (1) by a suitable press and punch, remove the clip ring (2) and the lower ring (3) by a clamp.
Pull out the pin (1) from the thrust lever arm (4).

Installation

For installation please reverse the steps of removal and make sure the mounting face of the pin is placed at 90°to the longitudinal axis of the suspension arm. The clip ring opening must be oriented as shown in the figure.
5009 Shock absorber

Figure 62

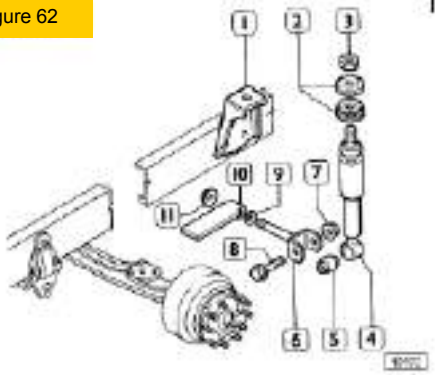

1. Nut.

1. shackle bracket 2. bushing 3. nuts 4. shock absorber 5. bushing 6. lower mounting bracket 7. nut 8. bolt 9. washer 10. bracket 11.

Chapter 8

3100 Wheel and Tire

Description

The wheel rim is the structure that improves the rigidity of the wheel and is identified by the following dimensions:

⑥ Rim diameter: Measured across the center of the wheel from one bead seat to the other.

⑥ Rim width: Distance between the inside of the bead flanges across the rim. The tire possesses the following functions:

⑥ To cushion the vibration from the uneven road surface to the wheels by aero-elasticity.

⑥ To transmit the driving force delivered from the engine to the road surface to move the vehicle;

⑥ To provide the maximum grip and stability of contact between the tire and the road and meanwhile afford satisfactory durability;

⑥ To withstand the centrifugal force generated by sudden brake, hard acceleration and turning;

⑥ To ensure the stability of the vehicle at high speed and the correct steering.

Specification and Data

Wheel		Wheel rim	Tire
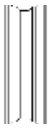	Special continuous disc type rim	22.5x9.00 22.5x9.00 22.5x8.25 20-8.5 24-8.5	12.00 R20 12.00－20

Tire pressure value

Note: When checking the tire pressure, pl

e
a
s
e

r
e
f
e
r

t
o

t
h
e

v
a
l
u
e
s

i
n
d
i
c
a
t
e
d

i
n

t
h
e

O
p
e
r
a
t
i
o
n

a
n
d

M
a
i
n
t
e
n
a
n
c
e

m
a
n
u
a
l
.

TOOLS

TOOL No.	Description
99305037	Electronic on-vehicle balancer for front wheel balancing

Fault diagnosis

Major tire problems:

1. Excessive wear.
2. Uneven wear
3. Vehicle pulls to one side

Excessive wear

Over speed over rough uneven road surface.	Yes ►	Reduce speed.
No ▼		
Sudden variation in speed caused by violent acceleration or urgent brake.	Yes ►	Avoid all unnecessary acceleration and brake.
No ▼		
Over speed with tire inadequately inflated.	Yes ►	Check tire pressure when it's in a cold state.
No ▼		
Tire over-inflated.	Yes ►	Reduce tire pressure.
No ▼		
Vehicle overloaded.	Yes ►	Consult permissible load capacity.

2 Uneven wear

The tire pressure varies from wheels.	Yes ►	Check tire pressure.
No ▼		
Tire inadequately inflated: Wear concentrated on the outer edges of the tread rather than in the center.	Yes ►	Inflate the tire to the right pressure.
No ▼		
Tire over inflated: wear concentrated on the center of the tread.	Yes ►	Deflate the tire pressure.
No ▼		
Insufficient front wheel toe-in: excessive wear on the inner edges of the tread.	Yes ►	Check and adjust toe-in.
No ▼		
Front wheels set to incorrect wheel geometry.	Yes ►	Reset to the correct wheel geometry.
No ▼		
Imbalance caused by wheel rims distortion.	Yes ►	Repair wheel rim, if possible, replace it and then balance the wheels.
No ▼		
Tire incorrectly fitted to rims.	Yes ►	Correctly fit the tire and balance the wheels.

(continued)

Rear axles out of parallel due to breakage of the center bolt of the leaf spring, different lengths of the springs or damaged spring buckled.	Yes	Overhaul the suspension.
No		
Excessive front wheel toe-in; excessive wear on the outer edges of the tread.	Yes	Check and adjust front wheel toe-in.

3 Vehicle pulls to one side

Front wheels out of balance.	Yes	Balance the wheels
No		
Front tires inflated to different pressures.	Yes	Check that both tires are inflated to correct pressure.
No		
Excessively uneven wear between tires of the same wheel pair.	Yes	Replace the tire that is excessively worn.

3105 Static wheel balancing

Figure 1

Balance the front wheels on-vehicle using the electronic balancer 99305037; the advantage of this method is that it can balance the wheels along with other rotating material.

The operation must be carried out as follows:

- Jack up the front of the vehicle and check whether the wheels can rotate freely.
- Position the jack-up device (1) under the axle near the wheel, set the height to where the tire roller of the vehicle wheel balancer 99305037 (2) is in contact with the tire; position an axle stand under the opposite end of the axle and lower the jack.

Figure 2

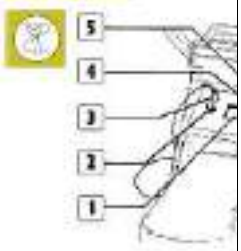

- Connect the lead (3) of the jack-up device to the vehicle balancer 99305037.
- Make a radial reference mark on the tire by chalk or a strip of adhesive tape.
- Switch the static balance position knob (2) and the sensitive knob (4) align to the scale nº 5 on gauge.
- Turn on the instrument lam (1), switch (5) and the strobe lamp (8).
- Turn on the tire roller switch (6) to the first speed position in order to rotate the wheel.

Turn on the tire roller switch (6) to the second speed position and push the balancer against the tire.

When the wheel is rotating, the stroboscopic effect will make the reference mark appear static; the finger of the gauge (1) will move from zero to a maximum value and then return to zero.

Once the finger starts to return, withdraw the balancer, switch off the tire roller (6) completely and brake the roller motor by using the brake lever (7).

The tire will continue to rotate under the inertia effect and new positions of the reference mark can be observed.

Read the value shown by the finger of the weight indication gauge (1).Multiply this value by ten to obtain the exact weight of the rim counterweight.

Figure 3

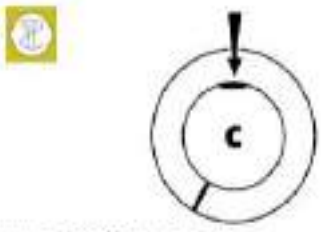

Mount the calculated counterweight as shown in the figure.

If the pointer stops in the green area during testing, that means the wheel is already balanced.

Note: If the counterweight required to balance the wheel exceeds 100 grams, divide it into two and attach one to the inside of the rim and the other to the outside, making sure that they are in the same position.

Correction of the Residual Static Imbalance

Figure 4

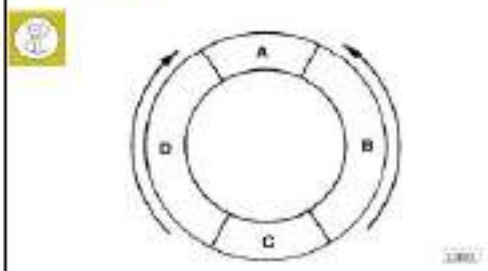

To correct the residual imbalance, repeat the operation mentioned above and refer to the weight indication on Fig 4 and on the gauge (1, Fig 2) to do the following adjustments:

- If the weight indication is in zone A, this means that it is too light and therefore it must be increased by the value shown on the gauge (1, Figure 2).
- If the weight indication is in zone C, this means that it is too heavy and therefore must be reduced by the value shown on the gauge.
- If the weight indication is in zones B or D, do not increase or reduce the weight, but move the counterweight 5cm in the direction of the arrow in Fig 4.

3106 Tire Inflation Pressure

The tire pressure must be checked when the tire is cold. The right reading should be carefully obtained: Too high a pressure will result in a harsh ride and excessive wear of the center of the tread, while if the pressure is too low, the load will not be distributed evenly over the entire tread but concentrated on the edges, causing premature wear of these areas and damage the internal structure of the tire.

Uneven tire pressure will affect the stability of the vehicle and is unsafe.

Abnormal tire wear occurs in different areas of the tread.

How Tire Behavior Depends On Pressure

The graphs illustrate how different inflation pressures affect tire behavior and performance.

Note: (The percentage values given inside the tires indicate the inflation pressure levels, while the performance value is determined by the service life of the tire).

Figure 5

Performance 40%

Figure 6

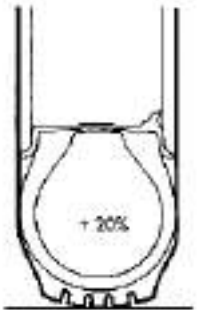

Performance 90%

Figure 7

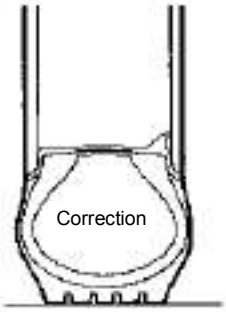

Performance 100%

Note: If abnormal wear of front tires is observed (either inside or outside of the tread), have front wheel toe-in checked. Never exceed the maximum weight per axle (the vehicle's gross weight being unchanged).
It is recommended to change the tire pair assembled on the same axle when filiform wear (see dotted areas on pictures) is visible because of wear.
Some tires have wear indicators. A replacement is required when it is indicated.

Chapter 9

Steering system

Page

Description

ZF8098 power steering gear is a set of continuous ball type steering units.

It is mainly composed of the following components: Housing, integrated steering mechanical portion, control valve and operating cylinder.

Figure 1

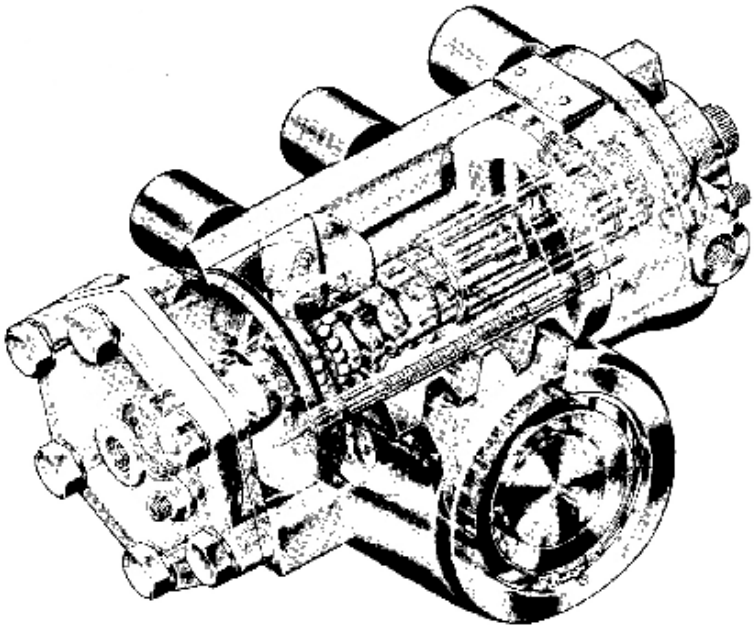

ZF 8098 Power steering gear

Specification and Data

Power steering gear	ZF 8098		Ball continuous type, with integrated pressure safety valve (the hydraulic guide device is equipped with a set of hydraulic devices for automatic adjustment of the steering angle.)
	Variable working pressure		170 + 10 bar
	Variable reduction ratio:	- driving center -steering lock	22.2:l 26.2:l

Power steering pump			ZF
	Min. revolution speed	500	500
	Max. revolution speed	4700	3500
	Max pressure (without pressure safety valve)	180	180
	Delivery volume	22	16

Common faults and diagnosis

Common faults of the power steering mechanism:

1 – Stiff steering when turning right and left

2 – Stiff steering only when turning left or right

3 – Stiff steering when the steering wheel is turned quickly.

4 - When steering, the wheel vibrates heavily

5 – The steering wheel vibrates when turning

6 – Excessive steering wheel plays

7 – Leakage of oils

8 – Insufficient pressure in the circuit

1 Stiff steering when turning left and right

Insufficient fluids in the circuit	Yes	Check oil level with engine running; top up to dip stick upper notch and bleed the circuit.
No		
Air in the hydraulic circuit.	Yes	Check the sealing parts of the intake pipe and the pump shaft gasket and top off the oil.
No		
Locked or jammed regulating valve.	Yes	Remove the valve, washer and check the throttle hole to ensure it is not blocked.
No		
Insufficient oil pump flow rate.	Yes	Overhaul or replace the pump.
No		
Poor sliding of the spider.	Yes	Move the joints in both directions so that it tilts by the dead weight.
No		
Poor lubrication of the transmission lever bearing (on vehicles with a second steering axle).	Yes	Apply grease to the transmission lever bearing.

(continued)

Worn transmission lever bearings (on vehicles with second steering axle).	Yes	Overhaul the transmission lever or change worn parts.
No		
Hydraulic cylinders not working.(on vehicles with a second steering axle).	Yes	Change the faulty hydraulic cylinder
No		
Hydraulic pump not working (6X6-8X4X4 vehicles).	Yes	Overhaul or replace the hydraulic pump.
2	**Stiff steering only when turning left or right**	
Faulty internal gasket.	Yes	Send the power steering mechanism to a ZF service station.
No		
Incorrect hydraulic center position (when the steering wheel is released it returns to an end	Yes	Have the power steering mechanism adjusted in a ZF service station.
3	**Stiff steering when the wheel is turned quickly.**	
Blocked regulating valve.	Yes	Remove the valve and washer and then clean them.
No		
Insufficient hydraulic pump flow rate (worn gear)	Yes	Overhaul or replace the hydraulic pump.
No		
Air in the steering system.	Yes	Check the sealing parts of the intake pump and the pump shaft gasket. Top up oil. Bleed the circuit

4 Strong knocks on the steering wheel when steering

Universal joint is slack.	Yes →	Replace the universal joint.
No ↓		
Internal breakdown of the power steering mechanism.	Yes →	Send the power steering mechanism to a ZF service station.
No ↓		
System oil level too low.	Yes →	Top up oil and bleed the circuit.
No ↓		
Bad wheel condition	Yes →	Perform inspection and adjustment.
No ↓		
Unbalanced wheels.	Yes →	Carry out the balancing operations according to the instructions in the Wheel and Tire section.
No ↓		
Slack steering knuckle kingpin	Yes →	Replace all worn parts
No ↓		
Hydraulic pump not functioning properly.	Yes →	Replace the pump.
No ↓		
Oil leakage at the pipe connection of the power steering mechanism.	Yes →	Check the condition of the gasket at the connection and replace all worn parts.

5 Steering wheel vibrates when turning

Unbalanced wheels. — Yes

No

Incorrect front wheel condition. — Yes

No

Air in the hydraulic system. — Yes

6 Excessive steering wheel play

Backlash in ball joints and/or loosened flexible mounting. — Yes

No

Universal joint is slack. — Yes

No

Internal breakdown of the power steering mechanism — Yes

7 Leakage of oil

Tank cover not secured. — Yes → Fasten the cover.

No

Performance deterioration of gaskets and seals — Yes → Change and top off oil and bleed.

In every case it is necessary to establish where and why hydraulic fluid is being lost, eliminate the caus
the engine running, top up fluid to upper mark on dipstick.

Check the sealing parts of the intake pump and the pump shaft gasket. Top off oil. Bleed the circuit

8 Insufficient pressure in the circuit

Pump not operating correctly. — Yes → Replace the pump.

No

Fluid leaking from the coupler of the power steering mechanism circuit. — Yes → Check the operational reliability of t seals and change all the worn parts.

No

Insufficient fluid in the tank. Pump not operating correctly. — Yes → Top off to the required level and bleed th

No

Fluid leaking from the coupler of the power steering mechanism circuit. — Yes → Check the operational reliability of t seals and change all the worn parts.
service station.

Tightening Torque

Description	Torque (Nm)
The Hexagonal nut with collar for steering support and idler arm	226.5 ± 22.5
Flanged hexagonal head screw securing the steering mechanism	278 ± 28
Hexagonal head screw for steering mechanism housing	527.5 ± 52.5
Calibrated hexagonal head screw for steering mechanism housing	527.5 ± 52.5
Castle nut for steering tie rod and hydraulic cylinder (*)	300
Self-locking nut for universal joint	55 ± 5
Calibrated screw for universal joint	55 ± 5
Fastening collar for tie rod and drag link	80 ± 10
Hexagonal nut for steering mechanism housing lever	575 ± 55
Self-locking flanged nut for steering mechanism mount	226.5 ± 22.5
▲Flanged hexagonal head screw for idler arm	278 ± 28
(*) If at the prescribed torque, the slot does not align to the hole, continue to tighten until it becomes possible to insert the split pin.	

Tools

Tool No.		Description
99347042		Steering wheel puller
99347045		Steering knuckle arm puller
99347068		Steering ball joint separator
99355032	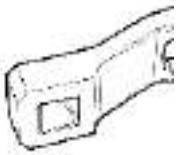	Wrench for power steering mechanism retaining bolts
99374393		Pressure gauge to test the power steering system pressure.
99374398		Graduated scale and pointer to measure steering play (to be used with

99374393)

Tools

Tool No.		Description
99374399	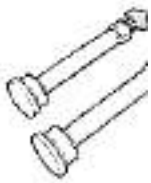	Pair of expanders to lock wheels (to be used with 99374393 and 99374398)

Steering control diagram (ZF 8098 power steering mechanism)

Figure 2

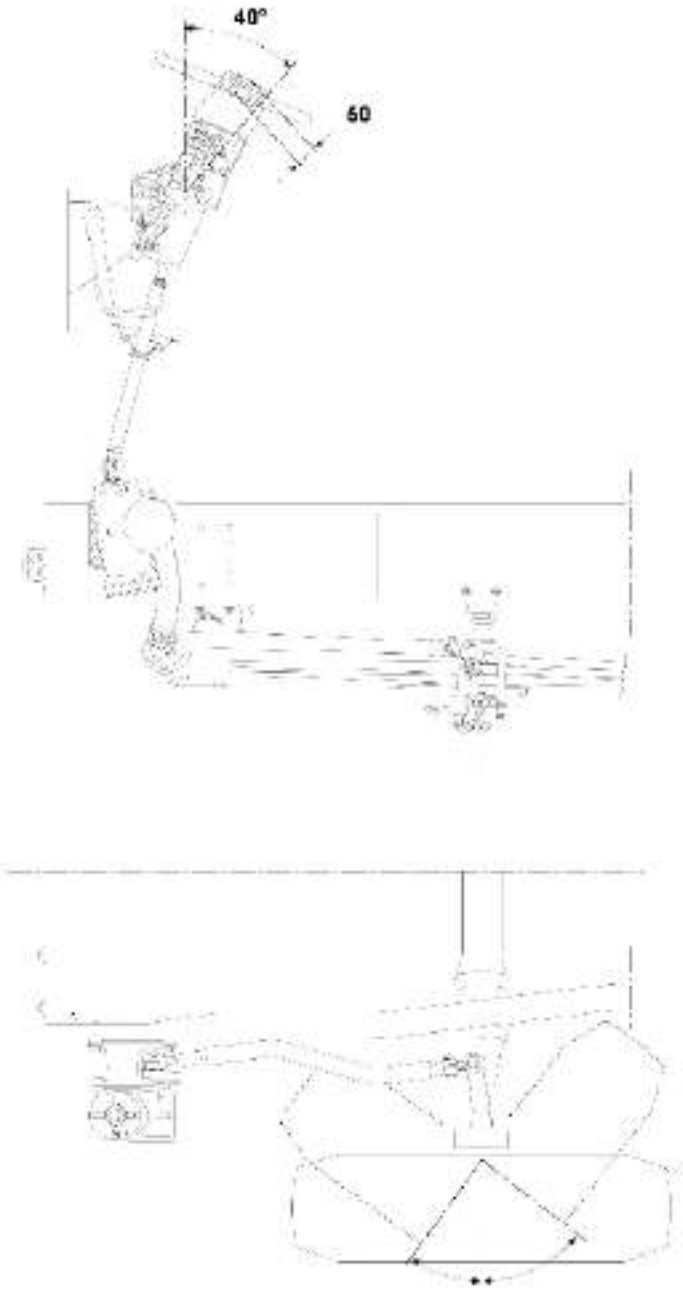

Hydraulic guide device

Note: If the hydraulic guide device has been replaced, before connecting the new hydraulic guide device to the support, the steering wheel lever should be installed on the new hydraulic guide device as described in the following section. If the hydraulic guide device is equipped with a steering limit automatic regulation device, the automatic regulation may be set as described in the relevant section after reconnecting the hydraulic guide device.

Install steering drop arm

Figure 8

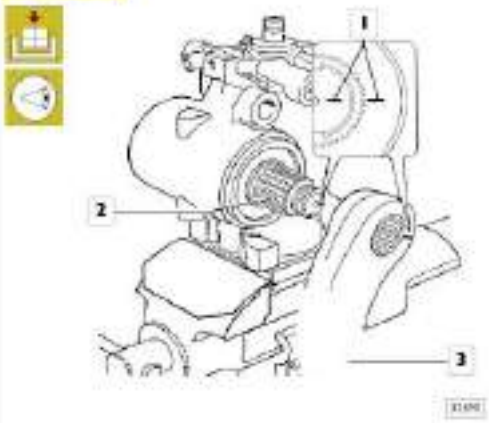

Secure the power steering mechanism in a vice.

Mount the steering mechanism lever (3), making the reference marks (1) cut on the driving shaft (2) and the lever (3).

In order not to change the setting of the automatic hydraulic steering limit device (if included), do not turn the shaft (2) of the power steering housing with torque that exceeds 25 Nm.

Figure 9

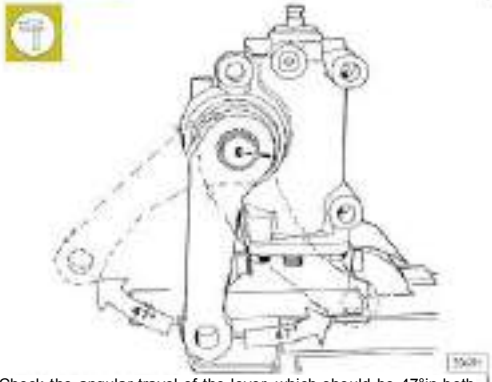

Check the angular travel of the lever, which should be 47°in both directions.

Figure 10

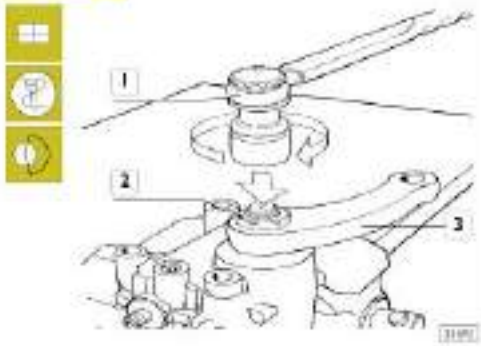

Keep the lever (3) static to prevent the power steering shaft from turning, lock the nut (2) on the lever with a torque wrench (1) to a torque of 575 Nm.

Figure 11

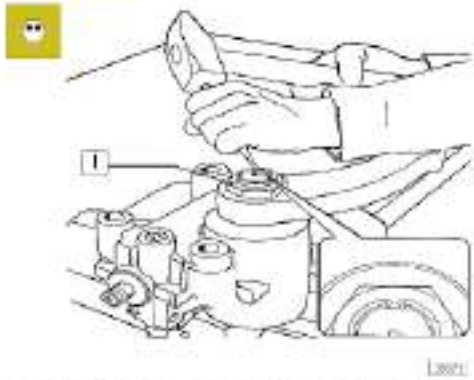

Using a suitable puncher, punch out the notch of the nut collar (1).

501410 removal and installation of the steering mechanism control ASSY

Removal

Figure 12

Lift the cowling of the cab. Set the wheels straight and check that the steering mechanism housing is in the “straight forward” position, that the reference mark ⇐ on the shaft (1) aligns to the reference mark ⇒ of the gearbox (2).

Figure 13

Engage the steering lock by taking out the ignition key .
Take the cover (1) off the steering wheel (2).

Figure 14

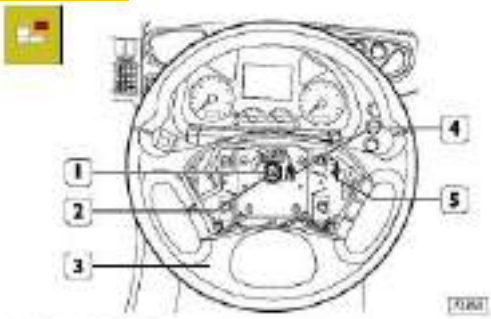

Disconnect the connection (4) of the grounding cable.
Remove the nut (1), mark the position of the steering wheel (3) ASSY on the shaft (2) and remove the steering wheel (3).

Figure 15

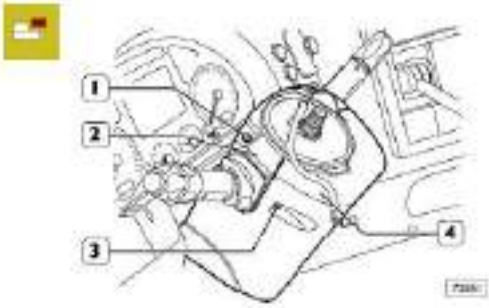

Take out the screws (1 and 3) and take off the side guard (2.4).

Figure 16

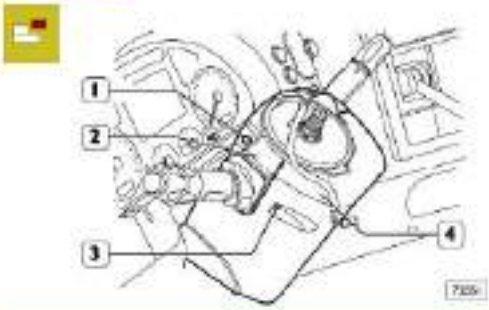

Remove the interconnecting housing (2) from the steering control mounting (4), strictly adhering to the procedures described hereunder. This is to prevent damaging the spiraled cable in the housing during assembly and to avoid a wrong angle reading of the steering wheel.

Disconnect the electrical connections (5 and 6).Take the key (5, Fig 14) out of the steering wheel (3, Figure 14).Secure the cover (1) of the interconnecting housing (2) to the housing by inserting the key (7) in the slots (8 and 9).This is to prevent the cover (1) and the housing (2) from interplaying during disassembling. Maintain this condition until assembly is complete. If there is no key (7) provided, use a screw and nut of suitable length and diameter.
Hold the interconnecting housing (2), lift it carefully in order to take out the retaining spring pin (3) from the mounting (4) and put aside.

Figure 17

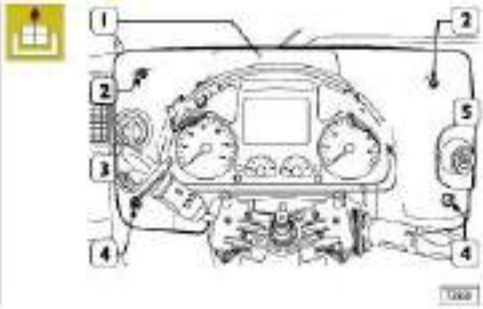

Remove the screw cover from the dashboard.
Take out the screws (2 and 4), remove the dashboard (1) and put aside.

Figure 18

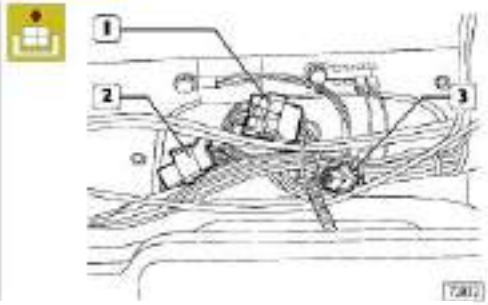

Disconnect the connections of wiring harnesses such as the windshield wipers, etc.

Figure 19

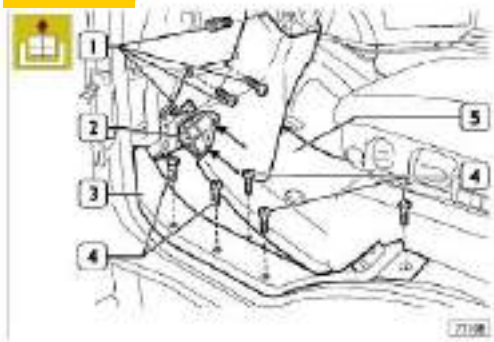

- Remove the mat (5).
- Loosen the retaining screws (4) of the step (3).
- Detach the step (3) from the vehicle.
- Loosen the fasteners (←) and take out the air ventilating opening (2) in the floor.
- Unscrew the side screws (1) fixing the steering column guard.

Figure 20

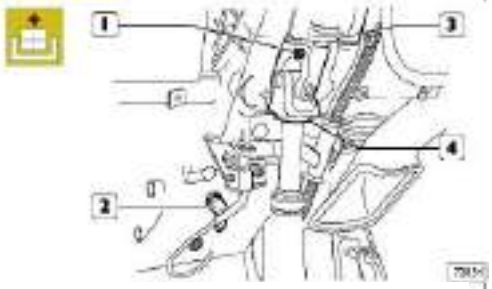

- Unscrew the screw (2) fixing the steering column guard in the dashboard area.
- Detach the steering column guard (1) from the vehicle.

Figure 21

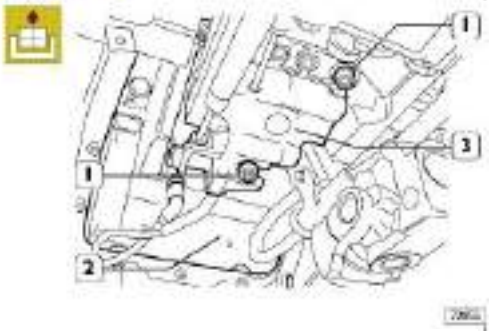

Mark the assembling position of the shaft (2, Fig 14) on the mounting (3) and the universal joint (4).Loosen the screw (1) and extract the universal joint (4) from the top shaft.

Figure 22

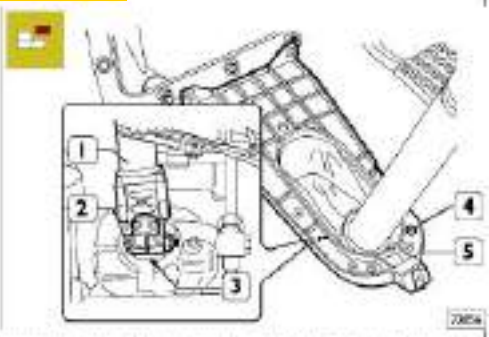

Take out the 3 screws (1) and remove the steering control mounting (3) from the pedal board (2).

Figure 23

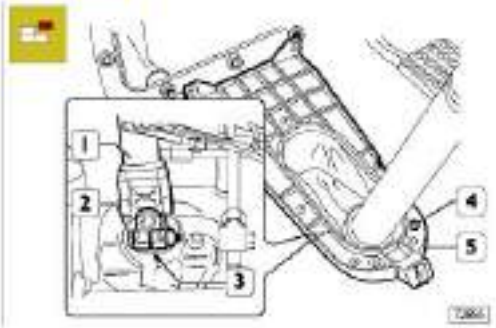

From outside the cab, loosen the screw (2) and disconnect the bottom shaft (1) from the power steering mechanism (3) shaft. Take down the screws (4) and remove the bottom shaft (1) together with the guard (5).

Reinstallation

Figure 24

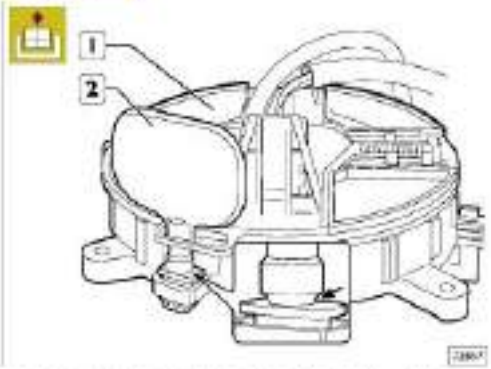

For reinstallation, please reverse the steps of removal, tightening the screws and/or nuts to the required torque.

The spare interconnecting housing (1) is provided with the stop key as illustrated in the figure. After installed onto the steering control mounting, it is necessary to turn the key (2) to align it to the point shown by the arrow and put the key into the steering wheel housing, see Fig 14.

Change the steering return switch.

Removal

Figure 34

Lift the cowling of the cab. Set the wheels straight and check that the steering box is in the Straight-head position, so the reference mark ⇐ of the shaft (1) lines up with the reference mark ⇒ of the steering box (2).

Figure 35

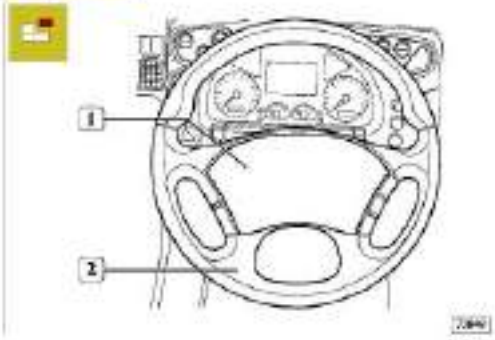

Engage the steering lock by taking out the ignition key .

Detach the cover (1) of the steering wheel (2).

Figure 36

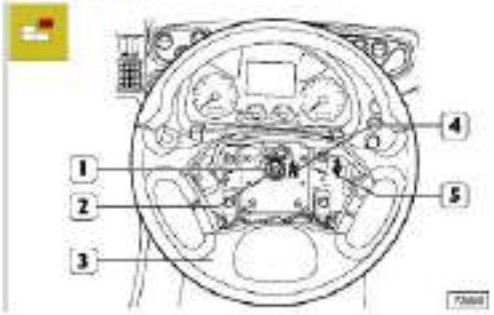

Disconnect the connection (4) of the grounding cable (4).

Remove the nut (1), mark the position of the steering wheel (3) ASSY on the shaft (2) and remove the steering wheel (3).

Figure 37

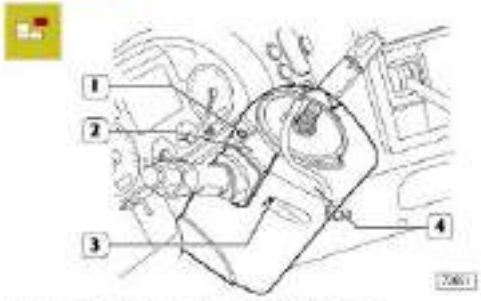

Take out the screws (1 and 3) and take off the side guard (2.4).

Figure 38

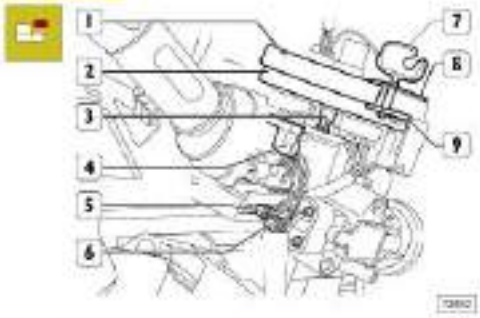

Remove the interconnecting housing (2) from the steering control mounting (4), strictly adhering to the procedures described hereunder. This is to prevent damaging the spiraled cable in the box, during assembly, and to avoid a wrong reading of the steering wheel angle.

Disconnect the electrical connections (5 and 6).Take out the key (5, Fig 36) of the steering wheel (3, Figure 36).Fasten the cover (1) of the interconnecting housing (2) to the housing by inserting the key (7) in the slots (8 and 9).This is to prevent the cover (1) and the housing (2) from interplaying during disassembly. Maintain this condition until assembly is complete. If there is no key (7) provided, use a screw and nut of suitable length and diameter.

Hold the interconnecting housing (2), lift it carefully in order to

Figure 39

Detach the retaining screw (2) of the steering column stalk (1), disconnect the electrical connection and disconnect the steering column stalk (1).

Installation

For installation, please reverse the steps of removal, tightening the screws and/or nuts to the prescribed torque.

The steering column stalks that are supplied as spare parts have no thread on the retaining plate. Never thread the holes because you might damage the components inside the steering column stalk. As the plate is made of aluminum that can secure it using self-threading screws.

Major operations

Bleed the power steering system

Applicable for all vehicles
To bleed the power steering system, follow steps as follows:
Fill the power steering fluid reservoir with the prescribed fluid (Tutela GI/A)
Switch off the engine, continue to top off the fluids to prevent entry of air into the pump.
Top off the fluids until the level remains constantly above the minimum mark on the dipstick.
Start the engine and run it idling, checking that the level of the fluid does not fall under the minimum level marked on the dipstick.
Turn the steering wheel from lock to lock several times to force air out of the power steering cylinder until no bubble appears in the fluids in the reservoir.
Accelerate to the maximum revolution speed, then stop the engine and check that the fluid level does not rise more than 1 to 3 cm.

Measure the steering mechanism play at the steering wheel

Check if there is any mechanical play in the steering linkages.

Lock the left wheels in the straight-ahead position using the

Figure 40

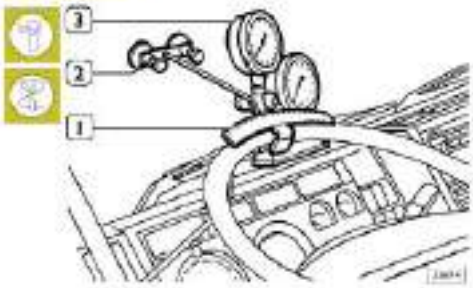

Attach the fixed pointer (2) to the windscreen with suction and attach the graduated scale 99374398 (1) to the steering wheel. Position the pressure tester 99374393 (3) (0 to 10 bar and 0 to 160 bar, pressure gauges connected by a shunt valve).Connect the pipe of the pressure tester to the connector of the power steering delivery pipe. Top off the fluid level if necessary. Start the engine and run at idle speed. Record the pressure reading shown on the 0 to 10 bar gauge. Slowly turn the steering wheel to the left until the previous pressure reading is increased by 1 bar. Keep the steering wheel in this position and record the reading of the graduated scale 99374398 in units of meat this time, turn the steering wheel to the right until the pressure reading increases by another 1 bar. Record the reading of the graduated scale 99374398 in units of mead the two values obtained by turning the steering wheel left and right; the sum should not exceed 40mm.Lower the axle.

Check the maximum pressure of the power steering system

Use the pressure tester 99374393 and connect it to the system as mentioned above. Then lock the wheels on the driver side, start the engine and run it in idle. Apply a steering force of 10÷20 kg to the steering wheel and record the pressure reading on the 0÷160 bar gauge. Repeat the operation applying the same steering force in the opposite direction; if the reading obtained is lower than the specified value, diagnose and find the cause of the problem.

Note: The maximum pressure is given on the data plate attached to the ZF steering mechanism housing.

Set the automatic hydraulic steering limit

Figure 41

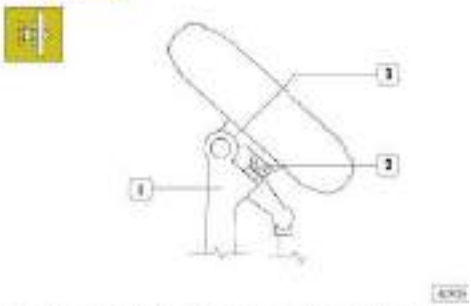

This adjustment is made after the power steering system is installed on the vehicle, with the vehicle unloaded and the front wheels raised or set on turrets. In addition, it is necessary to steer right and left as follows.
Make sure the gearbox is in neutral.
Start the engine and run it at a speed of ≤ 1500 rpm.
Turn the steering wheel in one direction until the stop screw (2) on the steering shaft (3) contacts the axle (1).
In this position, apply additional force on the steering wheel to default the automatic setting. Repeat this procedure while steering in the opposite direction.
If there is a reduction in the travel of the steering control stalk, it is necessary to change the steering limiting screw, or both of the two screws if the trouble occurs in the opposite direction as well.
The screws are located on the top and bottom of the power steering housing. Carry out the adjustment as described above.

Inspection

Connect the pressure gauge (minimum full-scale value 200 bar) to the pressure test coupling on the delivery line from the pump to the power steering mechanism, and apply a steering force to the steering wheel of 50±20 Nm (corresponding to 200 ±80 N on a 500 mm diameter steering wheel), turn the wheel to the full lock position. The pressure reading should be within the range of 35 to 70 bar. If the pressure is too high, change the adjustment screw and repeat the adjustment procedure. If the pressure is too low, check if the hydraulic system is functioning normally and no there is no leakage in the system.

Chapter 10

Brake system
Brake

Page

Symbols of the circuit diagram of the brake system

Description	Symbol	
Air flow		
Crossover of connecting lines		
Pressure test point		
Quick-connecting coupling		
Towing connector		
Silencer		
Compressor	0 2	
Condensate separator		
Filter	1 2	
Dehydrator	1 2	
Dehydrator with in-built pressure-regulat or valve	21 22 23 1	
Manual drain valve		
Pressure regulator with independent circuit	1 21 22 21 24	
Pressure regulator valve	1 21	
Pressure limit valve	1 2	

32782 32783

Symbols for air/hydraulic system circuit diagrams

Description	Symbol	
Proportional reducing valve	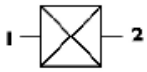	
Adapter valve	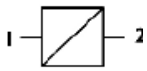	
Four-way protective valve	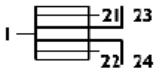	
Safety valve		
Check valve	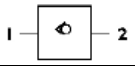	
Check valve		
Throttle valve		
Quick release valve	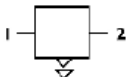	
Foot brake control valve	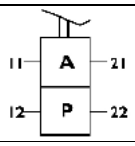	
Parking brake control valve	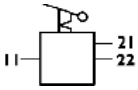	
Relay valve	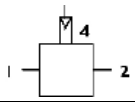	
Relay valve	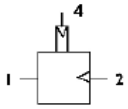	
Towing control valve	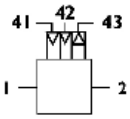	

(Air reservoir and accumulator)

Description	Symbol	
Compressed air tank		
Brake fluid reservoir		
Air spring		

32789

Symbols for air/hydraulic system circuit diagrams
(Indicators and switches)

Description	Symbol	
Pressure gauge		
Pressure gauge		
Pressure sensor		
Light		
Mechanical control switch		
Pressure switch		
Low pressure switch		
Audible warning		
sensor		

3506 pipes and couplings

General information

There are two types of pipes in the vehicle brake system:

- Nylon hose: Flexible nylon hoses with single or double-ply structure and spare parts with the following diameter are available: (Ø4,6,8,10 and 12mm).
- Steel pipe: Rigid metal pipe of the following diameters (Ø6, 8, 12, 15mm).

End formation of the steel pipe

Figure 1

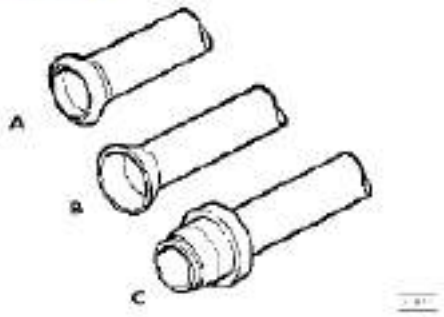

Types of the steel pipe end forming:

A Type end forming

Figure 2

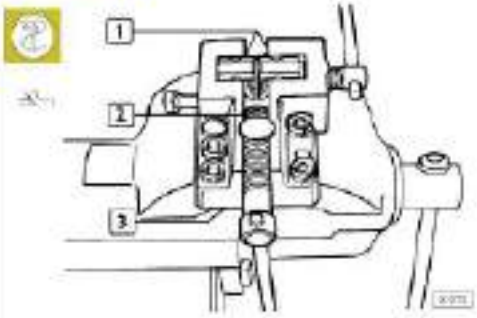

Position the blocks (1) on press 99386523 (3), put the press marked number indicating pipe diameter on the machining pipe towards the punching die (2). Choose punching die (2) according to the pipe diameter, every die (2) is marked with corresponding diameter.

Figure 3

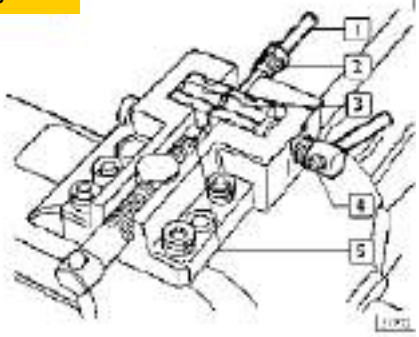

Chamfer pipe (1), place the straight joint (2) over it and position it between blocks (3) right against pin (5). Lock the pipe (1) with screw (4).

Figure 4

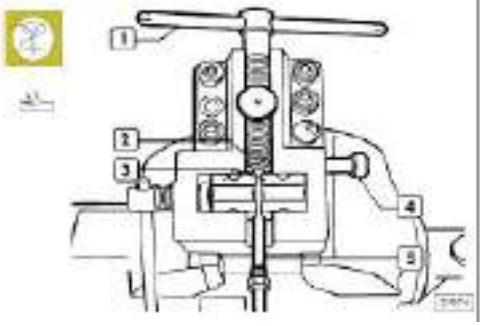

Move pin (4) to neutral position. Screw the screw (1) until the punching die (2) comes up against blocks (3); form the end of the pipe (5).

B Type end forming

Figure 5

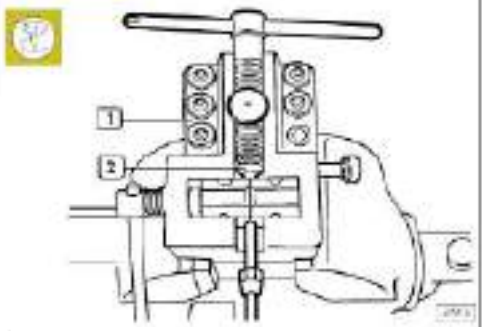

Mount the punching die (2) to press 99386523 (1). For the end forming procedure, please follow the above instructions for A type end forming.

C Type end forming

Figure 6

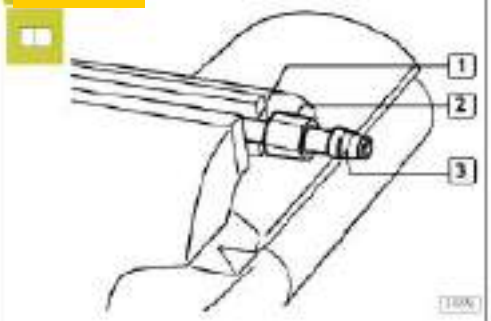

Install nut (2) and ring (3) onto the pipe (1).

Figure 7

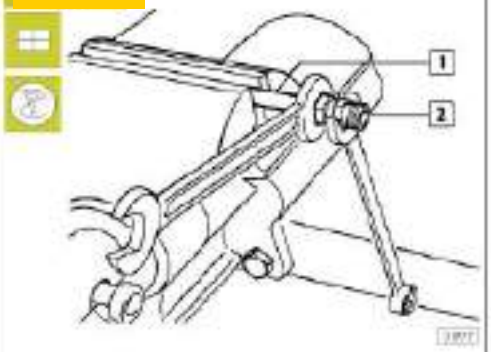

Mount the joint (2) and tighten so that the ring (3, fig. 6) is distorted, locking on the pipe (1).

Bending the rigid pipe

Figure 8

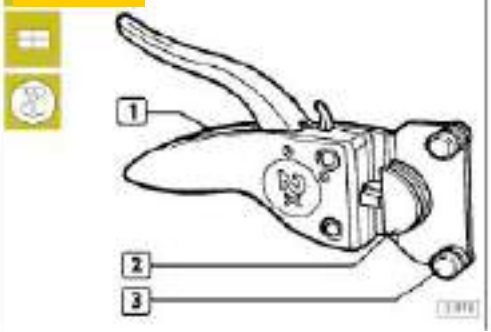

Assemble tool (1) 99386523, choosing parts (2) and (3) according to the diameter of the pipe being bent.

Figure 9

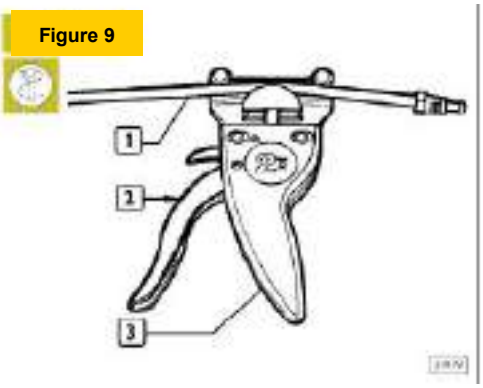

Position pipe (1) in tool (3) and bend pipe by pressing lever (2).

Figure 10

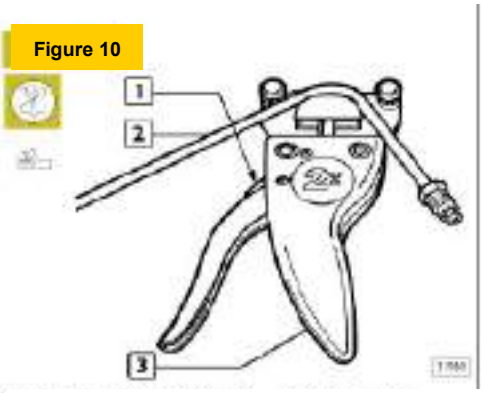

To release pipe (2) from tool (3), press catch (1).

Cutting rigid pipe

Figure 11

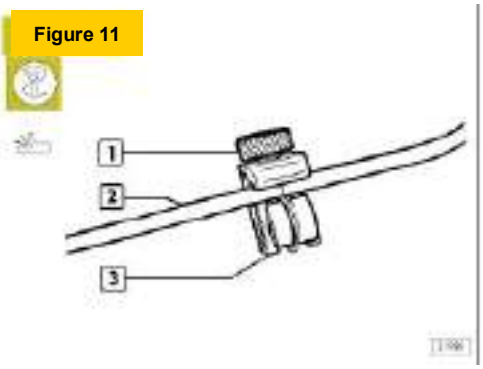

Position pipe (2) in tool (3) 99386523 and tighten screw (1).
Hold pipe (2) stationary, rotate tool (3) until the pipe is completely cut.

After cutting the pipe, chamfer the pipe and proceed to form the end as described above.

When tool (3) is rotating around pipe (2), screw (1) may loosen. To cut the pipe completely, it is therefore necessary to tighten the screw (1) as it becomes loose.

Nylon hose

Carefully follow the instructions below:

Figure 12

- Use only approved hoses.
- Check the condition of the replacement hose; there must be no cracks, cuts or incisions on it.
- Use suitable pipe cutting pliers 99387050, placed vertical to the central line and cut the pipe at the needed length.

Thread the pipe in the order given:

- Nut (3), pipe ring (2) (the thicker end towards the nut (3)) and reinforcing bush (1);
- the bush must be in perfect condition (free from any distortion or signs of hammering).

Figure 13

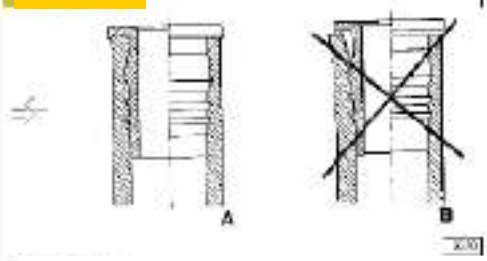

Assemble the reinforcing bush
A = the correct assembling mode
B = incorrect assembling mode

- Install the reinforcing bush with tool 99372219, verifying that the bush flange is contacting the end of the hose.
- Make sure that the end of the hose fits into the raked groove on the flange.
- End-form the seating bush when fitting to the vehicle or on the work bench to a joint.
- Apply pressure; make sure the final distance between the front edge distortion of the pipe ring and the reinforcing bush conforms to the specification listed in attached table.

If the joint is badly assembled, do not re-use the hose after extracting the bush and seating ring.

	Hose mm	Distance between edge of bush and ring mm (*)	Assembly pressure N/mm^2
Double-layer	6×1	from 1 to 1.5	0.040
	8×1	from 2 to 2.5	0.050
Single layer	10×1.5	from 2 to 2.5	0.050
	12×1.6	from 2 to 2.5	0.060
	16×2.34	from 3 to 3.5	0.060

(*) refer to h, Figure 14.

Figure 14

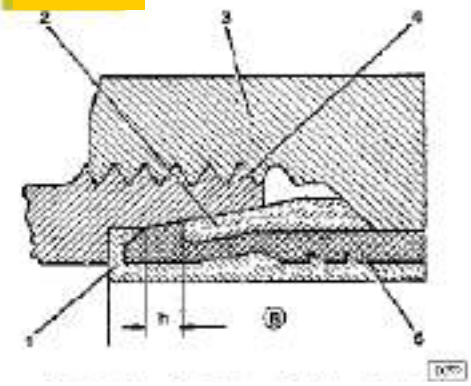

1. Reinforcing bush —— 2 pipe ring —— 3 nut —— 4 joint
5 Nylon hose - h. Distance between edge of bush and edge of ring (refer to the attached table).

Insert the end of the hose into the joint body until the reinforcing bush flange bears against seating;

- To tighten nut onto the joint, first please screw in all the screws by hand and then tighten the nuts to the specified tightening torque with a box wrench fitted on the torque wrench.

When connecting the hose to the vehicle, bear in mind some of the important points:

- When bending, do not exceed the minimum radius, so as to prevent blockage:

Diameter of pipe mm mm	Minimum bending radius mm mm
6 x 1	≈ 40
8 x 1	≈ 60
10 x 1.5	≈ 60
12 x 1.6	≈ 75
16 x 2.34	≈ 100

Make sure the hoses are not in contact with sharp edges or with sharp metal parts or sources of heat; keep a safety distance of at least 15mm from them.

- When hoses run through chassis beams or metal parts, make sure that the holes passing through are fitted with rubber grommets and that they are in good condition.
- Avoid sliding the hose along sharp edges which might cause cuts.
- Where the hose has to be attached to the existing pipelines, take account of the additional heat to which it may be subjected (power steering mechanism pipelines); in this case, protect the hose with heat insulation material.
- When the hoses are connected, check and verify that the hoses between joint points are not taught, but are slack to allow for thermal expansion. The short hoses, in particular, should be like this.
- Before fitting, thoroughly clean the hoses by blowing compressed air through them to secure operation of the system.

Figure 15

- Protect the hoses if grinding or welding operations are carried out on vehicle; a notice is fitted in the cab, strictly follow the instructions indicated to avoid damage.

For greater safety and convenience of operation, it is suggested to remove the hoses during these operations.

When fitting is finished, ensure that all seals (joints, couplings etc.) are completely free from leakage.

Replace flexible hoses with quick-connection Couplings

Swivel couplings:

Figure 16

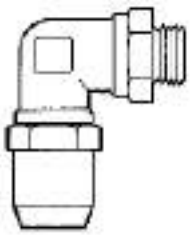

Screw the coupling into the threaded seating on the air valve and tighten it to the tightening torque indicated in the attached table.

Banjo couplings:

Figure 17

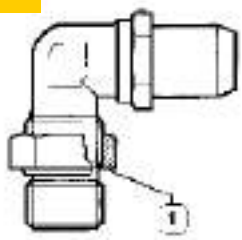

- Check the seal ring (1) in its seat;
- Tighten the coupling until the seal gasket contacts the valve;
- Direct the valve correctly and keep the movable part still; lock the hexagon nut to the torque indicated in the table.

Swivel and banjo couplings:

Coupling thread	Tightening torque (Nm ± 10%)
M 10 x 1.0 mm	22
M 12 x 1.5 mm	24
M 14 x 1.5 mm	28
M 18 x 1.5 mm	36
M 22 x 1.5 mm	40

Figure 18

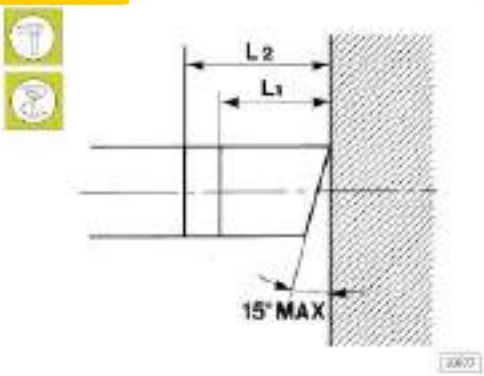

- Use only approved type-tested hoses;
- Check the condition of the new hose to ensure it has no cracks, cuts or scores;
- Put the hose at 90° with the axle and cut, the maximum error is 15°. Use pipe cutting pliers 99387050 to cut the hose at needed length;

Figure 19

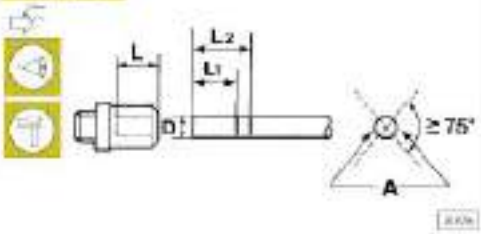

A = Mark to identify end of tube travel

Use oil-based ink to make two clear reference marks on both diametrically opposite faces of the pipe at an angle of ≥75°, set at distances L_1 and L_2, to ensure correct fitting.

L_1 and L_2 vary according to the diameter of the hose; measure the longer part of the hose (see Figure 18).

D (mm)	$L^{0}_{+0.5}$ (mm)	$L^{-0.5}_{1+1}$ (mm)	$L^{-0.5}_{2+1}$ (mm)
6	19.8	17	22
9	20.5	19	23
12	25	22	28
16	27.1	24	30

Figure 20

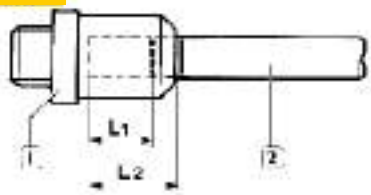

- Insert the hose (2) by hand into the coupling (1) with a force between 30 and 20 Nm according to the hose diameter, so that reference mark L_1 is inside the hose whereas L_2 remains visible.

Figure 21

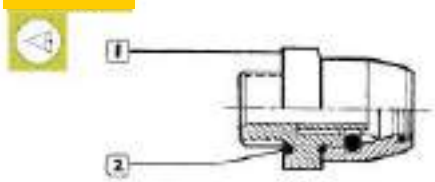

When removing couplings (1) on pneumatic components, check the condition of the seal ring (2) and replace it if necessary.

Coupling thread	Seal ring dimensions
M 10 x 1.0	10.1 x 1.6
M 12 x 1.5	11.0 x 2.0
M 14 x 1.5	-
M 16 x 1.5	15.0 x 2.0
M 22 x 1.5	-

Whenever a hose is removed from a quick connection coupling, the coupling itself must be replaced too. Spare quick connection couplings are supplied in a complete set.

Quick release and threaded couplings are not interchangeable. flexible hoses used with quick release couplings and flexible hoses used with threaded couplings are supplied.

Brake system work drawing (4X2)

Figure 27

Brake system work drawing (6X4)

Figure 28

Layout of the major components of the vehicle brake system

Figure 32

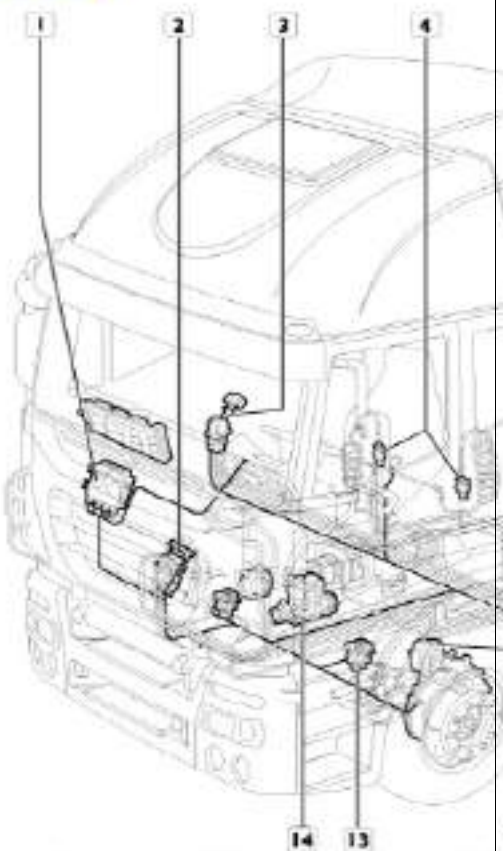

(1) ABS control valve (2) foot brake valve (3) hand brake valve (4) towing connection (5) air reservoir (6) relay valve (7) towing valve (8) air reservoir (9) brake chamber (10) four-way protective valve (11) air drier (12) front brake chamber (13) ABS braking valve (14) compressor

Service brake

Pneumatically controlled pedal types operate on all the wheels and the trailer.

It employs a double-loop system that divides into two independent proportions, one controls the brake components of the front axle and the other controls brake components of the rear axle. There's a third section which provides brake operation to the trailers.

When one of the loops malfunctions, the double-loop system can guarantee the normal operation of the other loop.

Emergency braking

This is a combined type parking brake.

Even when one of the the other axle by employing both service brake pedals and hand brake valve levers.

Retard auxiliary braking

It's mainly an exhaust brake and engine brake, which can use only exhaust brakes and the exhaust brakes and engine brakes together.

Brake

Drum brake

Each brake ASSY is an integral body with the adjustment arm, control pins and brake cam.

The brake cam is driven by the brake chamber lever operated by compressed air.

The brake cam rotates, overcoming the resistance of the return spring of the brake shoe, pushes the brake shoe to the drum, thus braking is performed.

The adjustment and control pins are integrated into the brake body; both of the two pins are fixed in a groove on one side. When the brake operation ends, there is no air pressure in the diaphragm chamber ber ake the the brake shoe is brought back to the previous position.

Engine exhaust brakes are to cut off the fuel supply of the fuel system and block the exhaust pipe, thus the engine works as a compressor to consume the vehicle's energy to reach the purpose of slowing.

The engine brake of a Cursor engine is composed of a hydraulic control mechanism which reduces the valve clearance of the exhaust valves. By applying this mechanism, at the end of the compression stroke, a few degrees before the T.D.C., the exhaust valves open slightly with a consequent reduction in the pressure formed in the cylinders. This takes advantage of the braking torque of the compression stroke without having the following return force on the piston.

Parking brake

Activated by pulling up the hand brake valve lever. It acts on the rear wheels of the towing vehicle, exhausting the compressed air in the rear spring brake chamber via relay valve, locking the trailer or wheel of trailer by the spring force..

The driver can check the usability of the trailer at his/her seat by releasing the trailer brake to ensure the availability of the combined tractor-trailer parking brake.

Diagnosis

Chapter 1

Diagnosing instrument

The diagnosing instrument provides simple diagnosis and configurations for every on-board ECU.

The system is made up of ECI module communicating with the ECU and of a notebook computer.

Figure 33

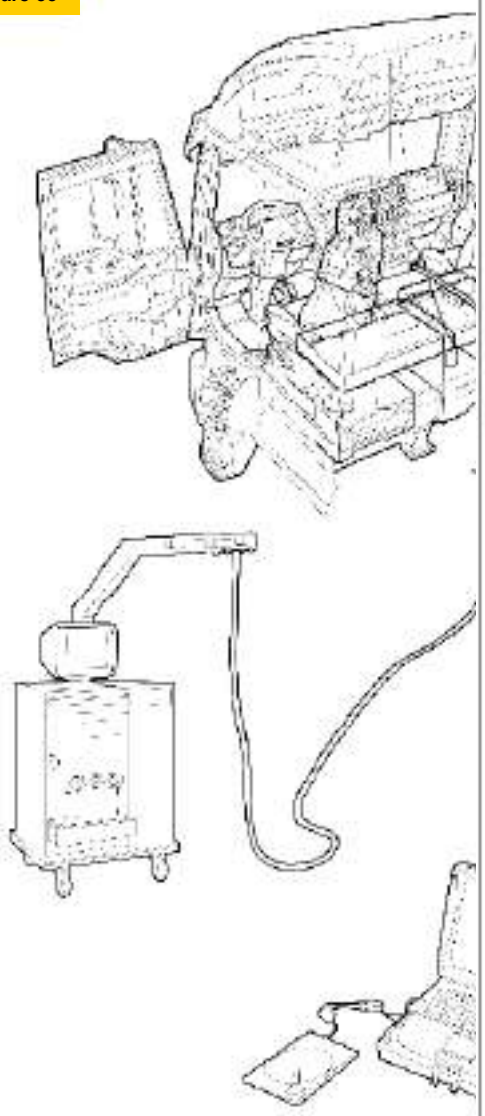

Diagnosis on instrument panel

Enter the diagnosis screen by pressing the switches "☛" "☚" on the instrument panel.

Figure 34

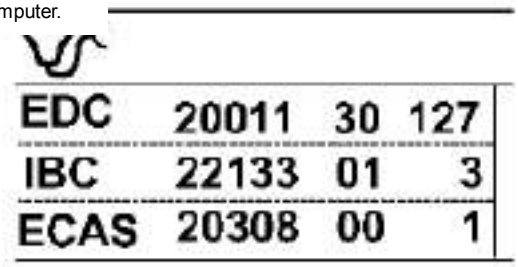

EDC	20011	30	127
IBC	22133	01	3
ECAS	20308	00	1

Diagnosing information on the cluster is classified into 4 columns:

- First column = central unit.
- Second column = central unit address plus fault number.
- Third column = failure type
- Fourth column = failure frequency.

The screen shows three error messages at most, but can store up to eight error messages. For information display, just operate "☛" and "☚" buttons.

Major operational malfunctions in the brake system:

1- Poor or abnormal inflation of the system.
2- Poor or abnormal brake of the rear axle service brake.
3- Poor or abnormal brake of the front axle service brake.
4- Poor or abnormal brake of the trailer service brake.
5- Poor or abnormal parking brake.
6- Poor or invalid parking brake of the trailer
7- Too slow release of the parking brake
8- Too slow release of the trailer parking brake
9- Vehicle slips when braking
10- Poor braking efficiency of the trailer retarder
11- Quick wear-out of the brake linings
12- Brake system malfunction indicator lamp lights up
13- Parking brake indicator lamp lights up with lever in drive position.
14- Noisy brakes

Inadequate or abnormal inflation of the system

Pneumatic system pipelines leaking or broken. — Yes → Tighten or change the loosened or damaged couplings. Change the cracked or damaged pipes.

No ↓

Failed air compressor. — Yes → Overhaul or replace the air compressor.

No ↓

Pressure regulator in drier broken down. — Yes → Overhaul or replace the drier.

No ↓

Four-way safety valve is faulty. — Yes → Overhaul or replace the four-way safety valve.

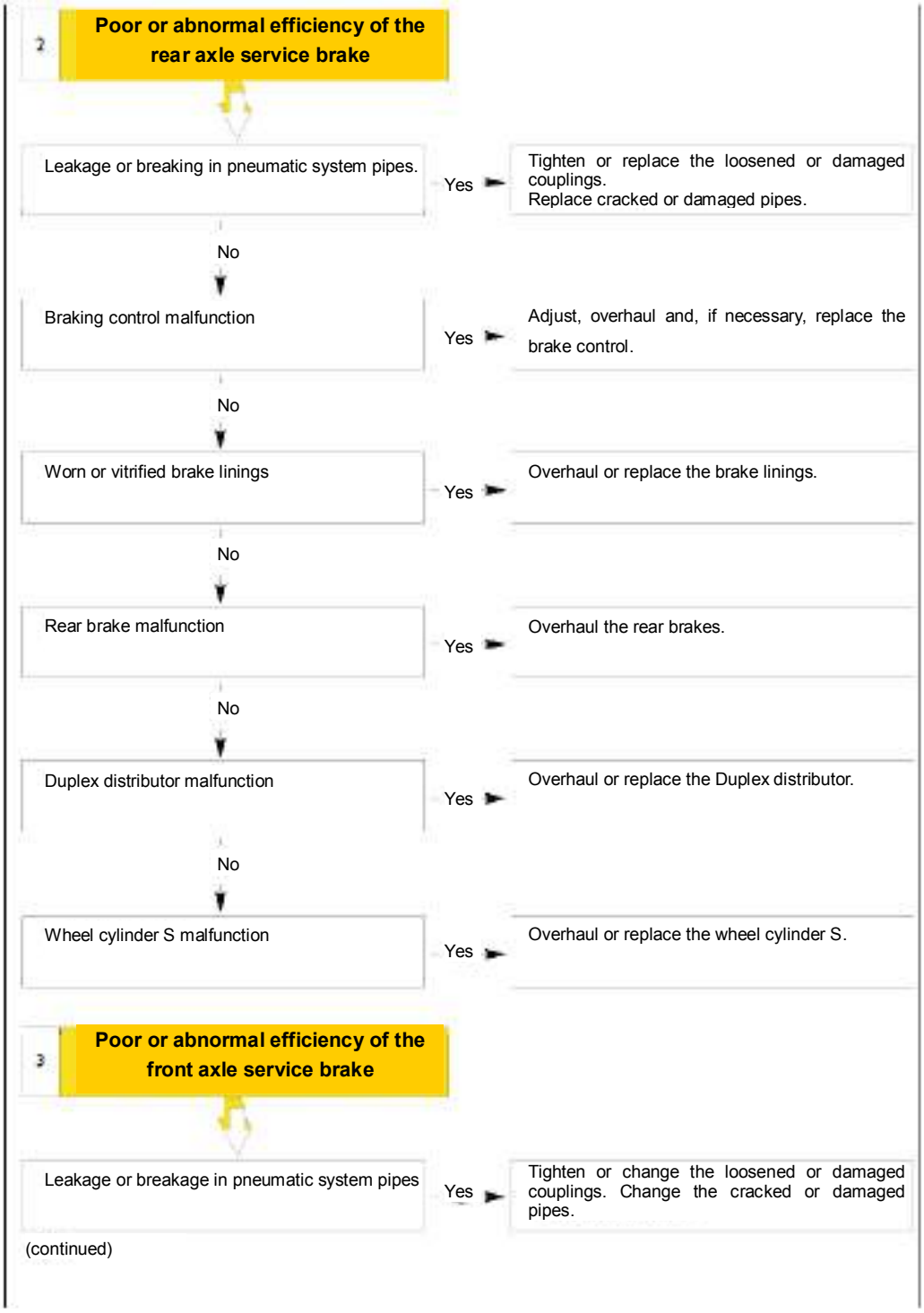

(continued)

Duplex distributor malfunction	Yes	Overhaul or replace the Duplex distributor.
No		
Worn and/or vitrified brake linings	Yes	Overhaul or replace the brake linings.
No		
	Yes	Overhaul the front brakes.
No		
Diaphragm wheel cylinders malfunction	Yes	Overhaul or replace the diaphragm wheel cylinders
Poor or abnormal brake efficiency of the trailer service brake		
Leakage or breakage in pneumatic system pipes	Yes	Tighten or change the loosened or damaged couplings. Change the cracked or damaged pipes.
No		
Triple control servo distributor is faulty.	Yes	Overhaul or replace the triple control servo distributor.

(continued)

Duplex distributor malfunction.	Yes ►	Overhaul or replace Duplex control valve.
No ▼		
Pressure reducer malfunction.	Yes ►	Overhaul or replace pressure reducer.
No ▼		
Worn or vitrified brake linings.	Yes ►	Overhaul or replace the brake linings.
No ▼		
Trailer brake malfunction	Yes ►	Overhaul the trailer brake.
5 **Poor efficiency or invalid parking brake**		
Leakage or breakage in pneumatic system pipes	Yes ►	Tighten or replace the loosened or damaged couplings. Replace cracked or damaged pipes.
No ▼		
Combined type wheel cylinder malfunction.	Yes ►	Overhaul or replace the combined type wheel cylinder.
No ▼		
Parking brake hand lever malfunction.	Yes ►	Overhaul or replace the lever.
No ▼		
Worn or vitrified brake linings.	Yes ►	Overhaul or replace the brake linings.

(continued)

Relay valve malfunction.	Yes ►	Overhaul or replace the relay valve.

6	**Poor efficient or invalid trailer parking brake**	
Leakage or breakage in pneumatic system pipes.	Yes ►	Tighten or replace the loosened or damaged couplings. Replace cracked or damaged pipes.
No ▼		
Triple control servo distributor malfunction	Yes ►	Overhaul or replace the triple action servo control valve.
No ▼		
Parking brake hand lever malfunction.	Yes ►	Overhaul or replace the lever.
No ▼		
Worn or vitrified trailer brake linings.	Yes ►	Overhaul or replace trailer brake linings.
No ▼		
Trailer brake malfunction.	Yes ►	Overhaul the trailer brake.

7 Delayed parking brake release

Leakage or breakage in pneumatic system pipes.	Yes	Tighten or replace the loosened or damaged couplings. Replace cracked or damaged pipes.
No		
Relay valve malfunction.	Yes	Overhaul or replace the relay valve.
No		
Combined type wheel cylinder S malfunction.	Yes	Overhaul or replace the combined type wheel cylinder S.
No		
Parking brake hand lever malfunction.	Yes	Overhaul or replace the lever.
No		
Rear brake malfunction.	Yes	Overhaul rear brakes.

8 Delayed trailer parking brake release

Leakage or breakage in pneumatic system pipes.	Yes	Tighten or replace the loosened or damaged couplings. Replace cracked or damaged pipes.
No		
Triple control servo distributor malfunction.	Yes	Overhaul or replace the triple action servo control valve.

(continued)

Parking brake hand lever malfunction.	Yes	Overhaul or replace hand lever.
No		
Trailer brake malfunction.	Yes	Overhaul the trailer brake.

9 The vehicle pulls to one side when braking

Leakage or breakage in pneumatic system pipes.	Yes	Tighten or replace the loosened or damaged couplings. Replace cracked or damaged pipes.
No		
Duplex distributor malfunction.	Yes	Overhaul or replace Duplex control valve.
No		
Brake control malfunction.	Yes	Adjust, overhaul and, if necessary, replace the load proportioning valve.
No		
Front brakes malfunction.	Yes	Overhaul the front brakes.
No		
Rear brake malfunction.	Yes	Overhaul rear brakes.
No		
Triple control servo distributor malfunction.	Yes	Overhaul or replace triple action control valve.

10 Poor efficiency of the trailer retard brake

Leakage or breakage in pneumatic system pipes	Yes →	Tighten or replace the loosened or damaged couplings. Replace cracked or damaged pipes.
No ↓		
Pressure reducer malfunction	Yes →	Overhaul or replace pressure reducer.
No ↓		
Triple control servo distributor malfunction	Yes →	Overhaul or replace triple action control valve.
No ↓		
Parking brake hand lever malfunction	Yes →	Overhaul or replace the lever.

11 Quick wear of the brake linings

Duplex distributor malfunction	Yes →	Overhaul or replace Duplex control valve.
No ↓		
Brake control malfunction	Yes →	Adjust, overhaul and, if necessary, replace the load proportioning valve.
No ↓		
Brake malfunction	Yes →	Overhaul brakes.

(continued)

Triple control servo distributor malfunction.	Yes	Overhaul or replace the triple action control valve.
No		
Relay valve malfunction.	Yes	Overhaul or replace the relay valve.

12 Brake system malfunction indicator lamp light up

Leakage or breakage in pneumatic system pipes.	Yes	Tighten or replace the loosened or damaged couplings. Replace cracked or damaged pipes.
No		
Four-way safety valve malfunction.	Yes	Overhaul or replace four-way protection valve.
No		
Indicator lamp electrical circuit badly wired.	Yes	Find the incorrect connection and rectify wiring.

13 Parking brake indicator lamp lights up when the hand lever is in service position

Indicator lamp electrical circuit badly wired.	Yes	Find the incorrect connection and rectify wiring.
No		
The hand lever for parking brake malfunction.	Yes	Overhaul or replace the lever.

(continued)

Pressure reducer operating normal.	Yes ►	Overhaul or replace pressure reducer.

14 Noisy brakes

Worn brake linings.	Yes ►	Replace the brake linings.
No ▼		
Shoe return springs malfunction.	Yes ►	Overhaul the rear brakes.
No ▼		
The elliptic deformation of the brake drums exceeds prescribed tolerance range.	Yes ►	Grounding or, if necessary, replace the drums.

Tightening Torque

Description	Torque	
	Nm	**(kgm)**
Air compressor		
Compressor		
Head fastening screws	30	(3)
Pulley fastening nut	190^{+1}_{-0}	(19)
Brake chamber		
Wheel cylinder ring nut	300+30	(30±3)
hand brake release screw	15+20	(1.5+2)
Diaphragm wheel cylinder (for drum brakes)		
Wheel cylinder ring nut	300^{+30}	(30±3)
Front axle		
Ring nut used to fix the wheel bearings	515±30	(51±3)
Cylinder head socket head screws to lock the wheel bearing adjustment clamp	27±3	(2.7±0.3)
Wheel securing nut	600^{+50}_{-20}	(60^{+5}_{-2})
Wheel hub cover ▣	130±10	(13±1)
Tapered thread plug for wheel hub cover	50±5	(5±0.5)
▣ Deposit a sealer bead only on hub cover ledge surface, using a special dispenser. Protect the threaded section. Use LOCTITE TYPE 574 as sealant.		
Screw used to fix drum	25±3	(2.5±0.3)
Cover securing screw■	50±5	(5±0.3)
Slotted screw	50±5	(5±0.5)
Wheel securing nut	615±35	(61.5±3.5)

TOOLS

TOOL NO.		Description
99301001	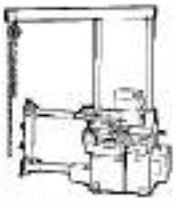	Grinding and turning machine for brake discs and drums
99301005		Brake disc turning equipment
99301006	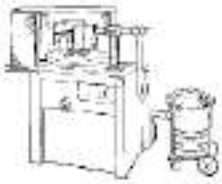	Brake shoe turning equipment
99305079		Brake shoe turning equipment
99305087		Rivet press
99305117		Instrument to inspect the air circuit

TOOLS

TOOL NO.		Description
99305121		Hot air gun
99341003	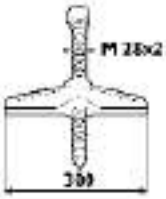	Single-acting bridge
99321024		Hydraulic trolley to remove and install the wheels
99327001		Modus station
99327030		Hydraulic trolley to remove and install the wheels
99341015	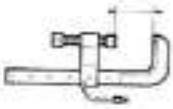	Clamp

TOOLS

TOOL NO.		Description
99341020	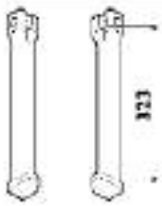	Pair of tie rods with clamps
99341023		Clamps
99341026	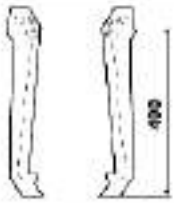	Pair of pulling arms
99345049		Reaction block for extractors
99345053		Reaction block for extractors
99345055		Reaction block for extractors

TOOLS

TOOL NO.		Description
99345103	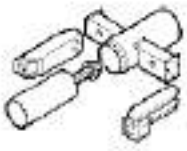	Wheel hub assembling tool
99348001		Extractor with lock device
9938004		Universal plug-in type extractor, 5-70mm
99354207		Wrench for wheel hub cover
99355167		Wrench (114 mm) for wheel hub bearing adjusting nuts
99356001		Adjusting wrench for wheel brake shoe

TOOLS

TOOL NO.		Description
99356006		Wrench for removal and assembly of the wheel cylinder ring nuts
99370005		Handles with interchangeable drivers
99370006		Handles with interchangeable drivers
99370007		Handles with interchangeable drivers
99370317		The reaction lever with extended lever used to fix the flange
99370715		Tube used to assemble the wheel hub

TOOLS

TOOL NO.		Description
99372211		Tool to remove and reinstall the brake shoe retaining springs
99372213		Tools used to machine the brake drum
99372228		Hub used to position the disassembled floating shoe turning tools on lathe 99301001
99372230		Tool for turning the disassembled floating shoes (used with 99301001 - -99372228)
99372237		Tool used to assemble the protective tube for the brake caliper sliding bushing
99372238		Tool used to take out the thrust unit of the brake caliper

TOOLS

TOOL NO.		Description
99372239		Tool used to assemble the thrust unit with brake caliper protective tube
99372240		Tool used to remove and reinstall the guide bushings for the brake caliper sliding bushing (used with 99372237 for assembly)
99372241		Tool used to press bonding the guide bushings of the brake caliper sliding bushing
99373004		Special tool used to remove the sealing gasket (Rockwell) of the wheel cylinder
99374025		Installer, wheel hub internal sealing parts (used with 99370005)
99374093	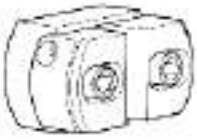	Drivers used to mount the bearing outer ring 91-134mm (used with 99370007)

TOOLS

TOOL NO.		Description
99387050		Cutting pliers for nylon pipes
99388001		Wrench (80 mm) for wheel hub bearing adjusting nuts

Specifications and data - pneumatic system

Description						
Compressor.						
❑ **Type:**						
Displacement						
Circuit	1	2	3	4	3	4
Second installation	21	22	23	24		26
Opening pressure (The circuit 1+2 be filled first)	$7.5^{+0.2}_{0}$		$8.0^{0}_{0.2}$			
Opening pressure of the integrated safety valve			> = 9.2			
Static closing pressure. (Without compensation, 0 bars in the circuit when out of service)	6.5±0.25		6.5±0.25			
Working pressure			8.5 -0.3		8.5 -0.5	
Oil pressure limiter on/off pressure difference			< = 0.65			
Air reservoir						
Air reservoir for front axle brake						
Air reservoir for intermediate and rear axle brake						
Parking + trailer						
Service tank						
Four-way distributor valve						
❑ **Type:**						
Supply pressure						
Working pressure						
Relay valve						
❑ **Type: KNORR - BREMSE - RP2A**						
Max. working pressure						
Description						
Parking brake distributor (stand-alone vehicles)						
❑ **Type: KNORR DPM 61EY**						
Supply pressure						
Travel of control lever (discharging) when starting emergency brake (start point of resistance)						
Parking brake						
Air pressure switch						
❑ **TDS F13043 - F13047**						
Working pressure						
Setting pressure						

When increasing pressure
When decreasing pressure

ABS wheel anti-lock brake control valve

- ❑ **Type: WABCO 472,195,055 0**
  Maximum working pressure
- ❑ **Type: KNORR - BREMSE IC 57664**
  Maximum working pressure

Check valve

- ❑ **Type: VOSS 02 68 91 42 00**
  Max. working pressure
  Impedance pressure

Inflating valve.

- ❑ **Type:**
  Working pressure

Pressure sensor

- ❑ **WABCO 441,040,015 0**
  Measuring principle
  Permitted over pressure

Diaphragm brake chamber

- ❑ **Type 14: KNORR EF 141 AY**
  Maximum working pressure
  Sleeve length
  Stroke

Rear brake chamber

- ❑ **Type 16/24 HF: KNORR 1 C 56449**
  Maximum working pressure
  Spring load

Diaphragm brake chamber

- ❑ **Type 22:**
  Maximum working pressure
  Sleeve length
  Stroke

Combined type brake chamber

- ❑ **Type 16/24 HF:**
  Spring load
  Stroke
- ❑ **Type 18/24 HF:**
  Spring load
  Stroke

Specifications and data – brakes

	Drum brake	FRONT AXLE	Driving axle
	Drum diameter: - Normal - 1st oversizing mm - 2nd oversizing mm	 410 ÷ 410.4 412 ÷ 412.4 414 ÷ 414.4	
	Brake lining thickness: - Normal - 1st oversizing mm - 2nd oversizing mm - Minimum permissible	 22.95 23.95 24.95 6.95	
	Diameter of brake linings: - Normal - 1st oversizing mm - 2nd oversizing mm	 408 ÷ 409 410 ÷ 411 412 ÷ 413	
	Width of brake linings: L mm	 179 ÷ 180	
	Clearance between brake linings and drum: G mm	 0.5 ÷ 1.2	
	Maximum error of concentricity in the drum diameter after turning E mm	 0.04	
	Wheel hub		
	Wheel hub bearing	Two, with tapered rollers	

		Set up correct.	
	Hub bearing end plays mm	Not adjustable	
	Hub bearing end play adjustment	Tightening to required torque with ring nut	
	Wheel hub bearing rolling torque	0.50 max	-

▣

Inspection of major components of braking system.

The said brake system must be inspected periodically with tool 99305117.
The inspection is done on the compressed air in the reservoir when the vehicle is stopped; when the
starts, the reservoir will be inflated again by the compressor.

Always block the vehicle before starting any type of operation. Periodically check the
comparing them with a master gauge.

DEVICE	Description	Inspection
	Compressor.	Check the sealing of pipe couplings and that the compressor is se sure the cooling fins are not dirty.
	Dehydrator	Operate the drain valve or loosen the plug (drain hole) to chec drier is running correctly. Air from the tank should be free condensation.
	Air reservoir ❑ FRONT AXLE ❑ Rear axles ❑ Parking + trailer ❑ Service tank ❑ Recharging tank	Inspect he seal and anti-rust protection. Discharge the condensation from the tanks through the drain valv
	Four-way safety valve	Inspection: Maximum opening pressure 8 bar Static closing pressure 6.5 +0.5 bar -0
	Hand brake valve	Operate the parking brake distributor until it triggers; the gauge c socket is to indicate the pressure discharge 0 bar in 1 second. The automatic coupling joint pipe and the gauge are to indicate, time, a pressure of 8.5 bar.
	Diaphragm brake chamber	Check fastening, integrity and sealing. The drain hole should be directed downwards and not clogged.
	Combined type brake chamber	Check fastening, integrity and sealing. The drain hole should be directed downwards and not clogged.
	Relay valve	Check the operation and sealing, evaluate the wheel cylind speed.
	Engine brake control cylinder	Check the operation and sealing of it.
	Pressure reducer	Check the set pressure (refer to Specifications and data table) Check the operation

Towing valve

Fill the tank. Connect a gauge to the automatic coupling head and to a variable coupling head respectively.
When the output pressure of the Duplex distributor reaches 1 bar, the pressure of the variable coupling head should be between 0.8 and 1.5 bar. Make a full brake (vehicle
The pressure (ad must be the required value, or 0.5 below the required value. Activate the parking brake; the pressure of the variable coupling head should remain the same, or be reduced by 0.5 bar.

Figure 35

Towing connector

Check the towing connector guide tube for dirt or damage.
After coupling, operate the brake pedal and check the sealing and stability between the coupling heads when delivering air at 7.5 bar.
Check and verify that no air leaks from the coupling gaskets.

Rear drum brake

When the pedal is released, the shoe should return quickly and evenly to its home position.
Check the clearance between the brake shoe and drum.
Check the thickness of the brake linings.

Drum brake

When the pressure on the pedal disappears, the shoes must return to the rest position quickly and evenly on all the wheels. Check the clearance between the brake shoe and drum.
Check the thickness of the brake linings.

Pipes and couplings

Make sure that the metal pipes are in goods condition, with no dents or cracks. The nylon hoses must have no cracks, cuts or scores. Make sure that the pipelines are not approaching any sharp edges of the body or chassis that may cause damage.
Check that all the brackets fastening the pipes are perfectly secured - poor fastenings may cause vibrations that will increase the possibility of breakage.
Check and verify that nylon hoses are not in contact with oil or mineral grease or rubber solvents.
Deeply press the brake pedal and verify that the pipes are not leaking.
Check and verify that the pipe couplings are free from leakage, if any leakage is found, please thoroughly tighten the couplings. When tightening, handle with care to prevent abnormal twists of the pipes
If there are any doubts on the above mentioned cases, change the parts. Additionally, it is recommended to replace the hoses after a certain mileage, or after a long period. This is to prevent the sudden break of the hoses because of aging and fatigue.

The sealing provision of the pneumatic system when the pressure is below the starting pressure with the engine still.

The inspection be carried out on the threaded coupling. Deliver air at a pressure of not less than 5 bar and apply quite thick soapsuds on the joints and couplings with a soft brush, then observe carefully for signs of leakage. The leakage is within tolerance if the diameter of the bubble is about 25 mm in 5 seconds, or the pressure drop volume in 10 minutes is about 2% of the pressure volume when stopping inflating (0.22 ± 0.02 bar).

The sealing provision of the pneumatic system when applying partial brake with pressure of 3 bar.

The pressure of the pneumatic system must remain stable for 3 minutes. This inspection should be carried out with the parking brake released.

	outer side of the	the flange surface; replace the faulty parts or grind the
	at the cylinder	inspection because the whole sealing ring seat is
		scraper ring place with the TOP inscription turned towards the compressor cylinder head.
		The notches of the scraper rings and piston rings are on the same vertical line. Correct installation with 120° stagger.
		Scored or ovalized cylinder Grind the cylinder and mount a bigger piston
No compressing pressure		Deteriorated compression or intake valve Change the faulty parts
		Deteriorated compression or intake valve Mount the piston rings and stagger the notches 120° to each other
		Perforated piston or damaged piston elements Change the entire piston
		Damaged gasket Change the gaskets
		Energy-saving device set on open during inflating stage. Replace the cylinder heads
Poor efficiency		Worn piston rings Replace the piston (and piston rings)

Figure 36

	Air leakage between cylinder and head	Replace the gasket and tighten the screws to the required torque
	Deteriorated energy saving unit, intake or compression valves	Change the faulty parts
	Excessive clearance between piston and cylinder	Grind the cylinder and mount a bigger piston
	Accumulation of the carbonized oil between the intake and compression valves	Clean the valves
Mechanical noises	Excessive clearance between the small end and pin, pin and piston hole, shaft and big end, shaft and bearing cover and between the flanges and shaft.	Check the tolerances of the relevant couplings
	Excessive clearance between piston and cylinder	Grind the cylinder and mount a bigger piston
	Excessive accumulated carbonized oil between the piston and cylinder head caused by oil combustion.	Clean the incrustations and replace the valves
Water leakage	Head gasket or contacting surfaces scored and uneven.	Change the faulty parts

A.P.U. (Air Processing Unit) selection and installation

Figure 37

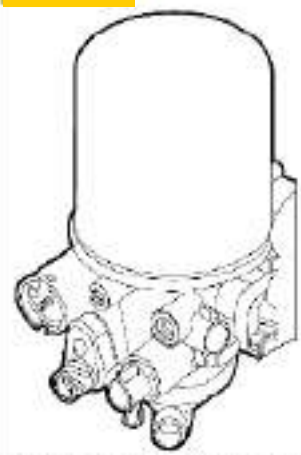

It is to keep the air clean and to maintain the right humidity in the distribution system and to keep the required operation pressure for the connected systems at the outlets.
This component integrates the functions of a 4-way pressure regulator, pressure reduction units for parking, service and trailer.

Diagnosis

Symptom	Possible cause	Resolution
Too much condensate in the circuit	Blocked filter cartridge	Replace the cartridge
The set pressure is not reached in the air reservoir	Air leaking from the safety valve	Overhaul the equipment and replace the components
	Worn sealing gaskets	Overhaul the equipment and replace the components
Air leakage at the drain hole	Piston sealing provision damaged	Overhaul the equipment and replace the components
Air leakage around the plug	Leakage from the valves in the four sections.	Overhaul the equipment, replace the wo
Air leaks if one section is broken	Defective operation of the check valves.	Overhaul the equipment, replace the wo the entire component if necessary.

Brake general

Figure 38

Distribute the air in the tank to the braking elements. It can automatically restrict the pressures, i.e. it limits the air output pressure to a set maximum pressure and, as a result, it is possible to maintain a maximum constant braking pressure regardless of the pressure variations in the tank.
According to the correction of the brake control system (if existing), adjust the braking force of the front axle elements.

Figure 39

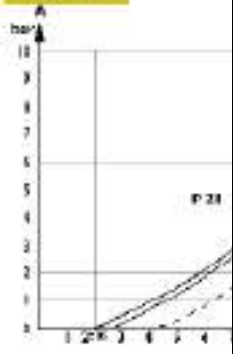

Characteristics chart

A = output pressure p21/p22 [bar]
B = Shoe travel [mm]

Diagnosis

Symptom	Possible cause	Resolution
Air leakage from the bleed hole	Air leakage from the outlet pipe due to the worn gaskets	Overhaul the equipment and replace the worn components
Irregular automatic pressure restriction of the distributor	The auto restricted pressure is higher or lower than the required pressure	Adjust the device through the corresponding screw
Vibrations when b	Worn springs Air leakage from two sections of the piston gasket	Overhaul the device and replace the faulty components Overhaul the device and replace the faulty components
Abnormal operation of the brake lamp control switch	The electrical circuit does not close The electric circuit does not disconnected	Replace the switch Replace the switch

Towing valve

Figure 41

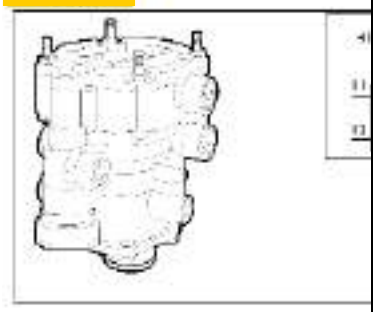

The unit, controlled by two independent circuits of the brake general valve and the tractor spring brake circuit, controls the brake of the trailer. It is also equipped with a control regulation device fitted on the lower external part.
The unit is used to brake the trailer with a malfunction in the control circuit, combined with another device.

Adjustment of control

The unit is equipped with a control regulation device.

Figure 43

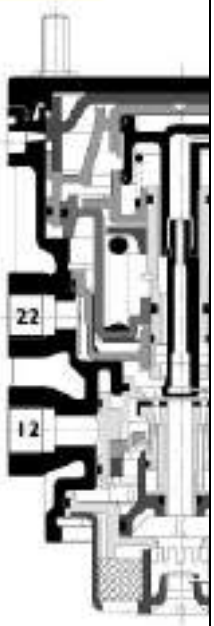

To execute the control adjustment of the towing valve, please follow the operation procedures hereunder:

- Remove screws (2) from the outlet silencer body.
- Fix a suite of screw wrenches into the hole passing through the silencer body and turn the body hexagon hole (1)
- Turn it clockwise to increase control.
- Turn it counterclockwise to decrease control.

Figure 44

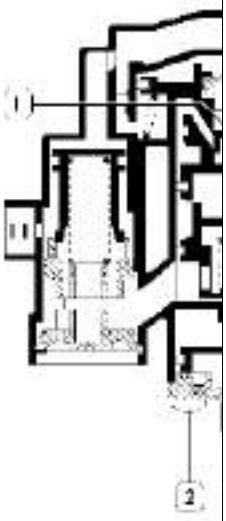

Carry out the control adjusting according to the following operation procedures:

- Remove screws (1) and then remove the cover (3).
- Turn the control adjusting screw (1).
- Turn it clockwise to decrease control.
- Turn it counterclockwise to increase control.

Diagnosis

Symptom	Possible cause	Resolution
Air leakage from the bleed hole when in still state	Leaking from the sealing gaskets. Faulty exhaust valve and valve seat.	Overhaul the unit and replace faulty components Overhaul the unit and replace faulty components
Outlet pressure different from the set values	Incorrect control valve Air leakage from the sealing gaskets Worn pistons and seats or malfunction Strained springs Incorrect control valve	Adjust the control Overhaul the unit and replace faulty components Overhaul the unit and replace faulty components Overhaul the unit and replace faulty components Carry out control adjustment.

Towing connector

Figure 45

The variable-pipe coupling head is covered with a yellow cap, while the automatic-piping coupling is covered with a red cap and a safety ridge (1). The application of the safety ridge prevents incorrect coupling.

7 ck valve (towing vehicle)

Figure 46

The compressed air should flow in the direction of the arrow marked on the housing; make sure to prevent reverse flow.

Parking hand brake valve (tractor)

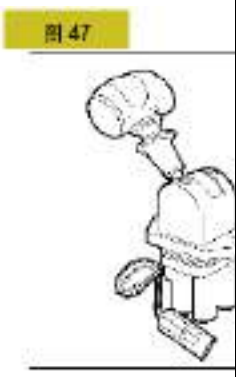

The device realizes emergency and parking brake of both the tractor and the trailer.
And it can also be used to check the brakes of the tractor. This operation must be carried out when the vehicle is parked on a steep road.

Diagnosis

Symptom	Possible cause	Resolution
Air escapes from the bleed of the control lever.		
In brake release position	Faulty exhaust, valve, corresponding seat or seal ring	Check and overhaul the unit, replace faulty component. Carefully clean the component.
In braking position	Worn control valve, seal rings and control valve elements	Check and overhaul the unit, replace faulty components. Carefully clean the components.
Difficult to operate the control lever	Internal component conflicts inside the distributor.	Internal component conflicts inside the distributor.

Figure 47

Parking hand brake valve

Figure 48

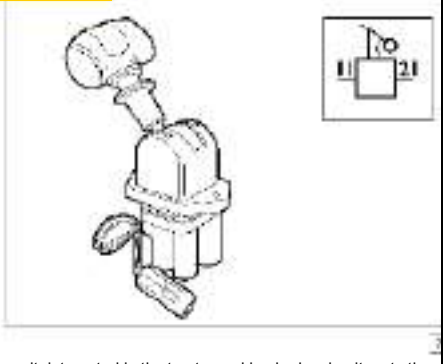

The unit, integrated in the tractor parking brake circuit, puts the emergency and parking brake into effect by discharging the air contained in the spring cylinder.

Diagnosis

Symptom	Possible cause	Resolution
Air leakage from the discharge with the brake lever in brake position	Worn piston, exhaust valve, seal rings	Clean carefully, verify that all the rubber components and the corresponding seats are in perfect condition. Overhaul the unit and replace faulty components
Air leakage from the discharge with the brake lever in emergency or parking brake position	Worn piston and corresponding seal ring	Clean carefully and check the components, overhaul the unit and replace faulty parts.
Air leakage from the cover of the brake lever	Worn plate, gaskets and seal rings	Clean the components carefully, check the seal ring and the gasket surfaces. Make sure that the rubber components and the corresponding seats are in perfect condition. Overhaul the unit and replace faulty or worn components, if necessary restore the contact surfaces.
Difficult to operate the brake lever	Internal components conflict inside the distributor.	Clean carefully and check all the components. Overhaul the unit and change the faulty components, when reinstalled in place, lubricate all the sliding positions with grease. If any malfunction or wear-out is found that may affect the normal operation of the system, replace the entire unit.

Relay valve

Figure 49

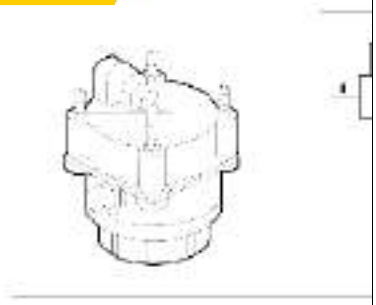

This unit can reduce the maintenance time of the front or rear axle brake system.

Diagnosis

Symptom	Possible cause	Resolution
Air leakage at exhaust with control pipe in discharging state	Leakage from the delivery position or from the seal rings	Overhaul the unit and replace faulty components
Air leakage at the outlet with control pipe in supply state	Leakage from the piston seal rings or from the exhaust valve	Overhaul the unit and replace the faulty parts

Figure 50

Engine discharging brake control valve

图 50

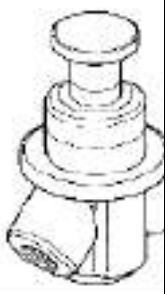

This is an automatic distributor that can be activated in the cab. It is built in the driver control module for the engine brake.

Figure 51

Engine discharging brake control valve

图 51

The unit delivers the pressure of compressed air to the mechanical braking device when the brake pedal is pressed. In case of failure, the complete cylinder has to be replaced (Drum brake shown in the figure).

Combined type brake chamber

Figure 52

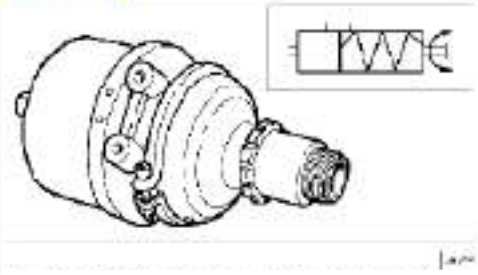

The unit is composed of two components: One with a diaphragm for the service brake and the other with a spring for the parking and emergency brake in the case of failure in the brake system.

Combined wheel cylinder emergency relief device

Figure 53

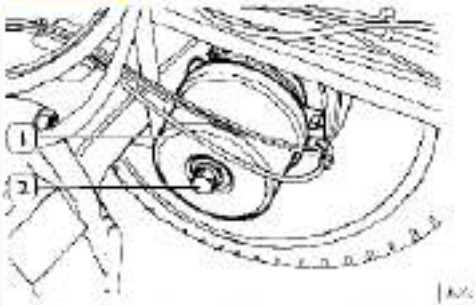

In case the air cannot act on the spring of the combined wheel cylinder (1), it is possible to manually release the brake to enable towing of the vehicle. To release the brake, loosen the screw (2) to the end of its stroke.

Maintenance operation

Figure 54

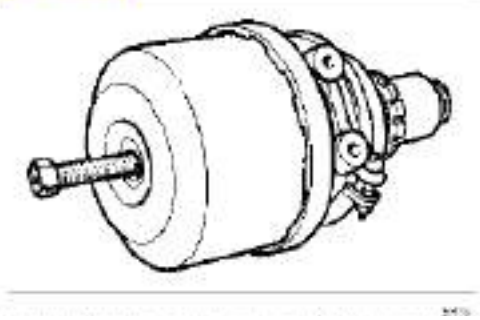

Before removing the combined wheel cylinder from the vehicle, manually release the brake of the combined wheel cylinder as described above.

It is recommended to carefully clean the mud or other contaminations from external parts of the cylinder as entry of these substances may damage the cylinder.
If the cylinder spring section fails, do not remove this part since this operation may cause personal injury to the operator.

Diagnosis

Symptom	Possible cause	Resolution
Air leakage at the exhaust or the spring collar.	Perforated or broken diaphragm. Broken diaphragm lip Loosen fastening screws of the spring collar.	Replace the diaphragm Tighten the screws
Air leakage at the diaphragm section	Strained spring components	Overhaul the unit and replace the worn components

Diagnosis

Symptom	Possible cause	Resolution
Air leakage at the outlet during brake phase	Gasket on the control piston Faulty exhaust valve or corresponding seat	Overhaul the unit and replace the worn components
Air leakage at the couplings	Not tightened to specified torque	Tighten the couplings to specified torque

ABS (Anti-Lock Brake System)

To brake and decelerate a running vehicle, the brake distance is determined above all by the friction force between the tires and road surface.

For a brake system functioning properly and sufficiently, a further improvement in braking can only be achieved by increasing the friction of the tires or grip of the road surface.

When in especially tricky road conditions, such as poor grip due to a wet or icy road surface, the driver must operate the brake with proper force to avoid the risk of slipping caused by locked wheel(s).

Therefore, the function of the ABS system is to ensure vehicle stability (in all braking conditions), preventing the wheels from locking regardless of the road surface conditions, thus making full use of the grip.

Even in case of emergency braking,

Pressure sensor

Figure 55

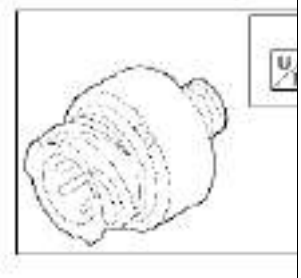

In ABS/EBL systems, its duty is to transmit the data of the driver's operation to the electronic control unit.
In EBS systems, this unit is integrated in the front axle, rear axle and trailer control valves.

the system can maintain the driving direction following steering (avoidance of obstacles) without risk of slipping.

In a word, the anti-lock brake system (ABS):

- Prevents the wheels from being locked when the vehicle is braking, no matter what the road surface is.
- Shorten the brake distance.
- Guarantee the safety of the driver by maintaining the stability and direction of the vehicle.

ABS Electronic control unit

Figure 56

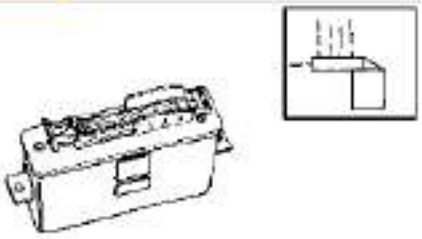

The electronic control unit acts as the brain of the system.
It controls the system solenoid valve according to the signals received from the wheel speed sensor.
Each channel features four functional circuits: The first is the input circuit that receives the analog signals from the sensor on the relevant wheel, debugged and converted to digital data through the cyclic square wave measurement. Meanwhile a main circuit with a microprocessor built-in is provided to process the information received from the input circuit.
The microprocessor contains a sophisticated program that enables it to determine the wheel acceleration and deceleration values and to make the logical combinations of the various adjustment signals. When necessary, it sends two command signals to the relevant anti-lock distributor through the third control circuit to properly adjust the braking pressure.
The fourth and also the last circuit is the safety circuit that inspects the efficiency of the various system components.
In the case of a failure, it not only informs the driver by lighting the relevant warning indicator on the instrument panel, but also automatically disconnects the entire ABS system, keeping the conventional brake system fully efficient.

Brake anti-lock distributing valve

Figure 57

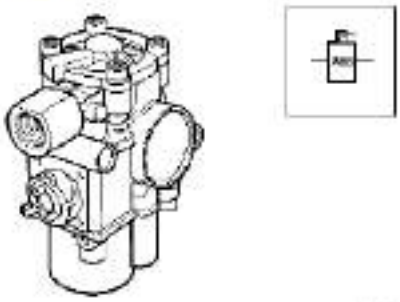

This component regulates the air pressure in the brake circuit. When the electronic control unit detects a wheel locking, the valve will cut off the wheel cylinder air supply, thus preventing the wheel from locking.

The device applies brakes to the driving wheels through the anti-lock regulator whenever it detects slipping of one or more

Braking stage

When braking, the diaphragm brake chamber push rod presses down on the lever (30).
The force is transferred to the axle (15) with the bearing off the central position (31)
Through the threaded sleeves (2) and pistons (3), the force is transferred to the inner brake linings (28).
Once the clearance between the brake linings (28) and brake disc (29) has been restored, the force is transferred to the outer brake linings (28) due to the movement of he brake caliper.
The braking force is therefore produced when the brake linings (28) are pressed on the brake disc (29) .

Releasing stage

As soon as the brake pressure decreases, the pressure spring (17) and rear axle (15) return to their original positions along the threaded sleeves (2) with the lever (32).

Automatic clearance recovery

The brake is equipped with an automatic adjustment device, which maintains regular working clearance between the brake linings and brake disc.
Every time the brake operation is applied, the adjustment device (21), which is integrated into the lever (32), will start up automatically. If the working clearance between the worn brake linings and brake discs increases, the adjustment device (21) and drag link (13) will turn the threaded sleeves (2) to recover the said increase in clearance.
The working clearance should be between 0.6 and 1.1 mm; too small clearances might cause overheating problems.

Inspection

Check the efficiency of the automatic recovery system.

Figure 61

the wheel.
are transmitted to the electronic control unit for processing. Each wheel has a sensor and a sound wheel installed on it. This enables individual adjustment of the braking pressure for each wheel, thus optimizing the driving stability and brake distance.

Remove the lock nuts and wheels by the hydraulic stand 99321024 (1).

Figure 62

Remove the plug (4) by a protruding (3) and make su
(2) is not loose

Note: Never turn the adjusting pinion (1) with
adapter (2) first. If it exceeds the cutting
adapter, the adapter may be damaged.
Try again with a new adapter and if it
once again, there is an internal malfunctio
caliper and it has to be replaced.

Figure 63

Install the adapter (2, Figure 62) to the adjustme
suitable wrench (1) and rotate it counterclockwise
increase the clearance between brake linings and br

Operate the brakes about 5-10 times and make su
(1) moves clockwise with small increments until
between the brake linings and brake disc is fully rec

If not, i.e. the wrench can't turn, turns only once o
directions, this indicates the automatic clearance re
has malfunctioned. Replace the brake caliper an
wheel onto the vehicle by the following procedures:

Brake

Figure 102

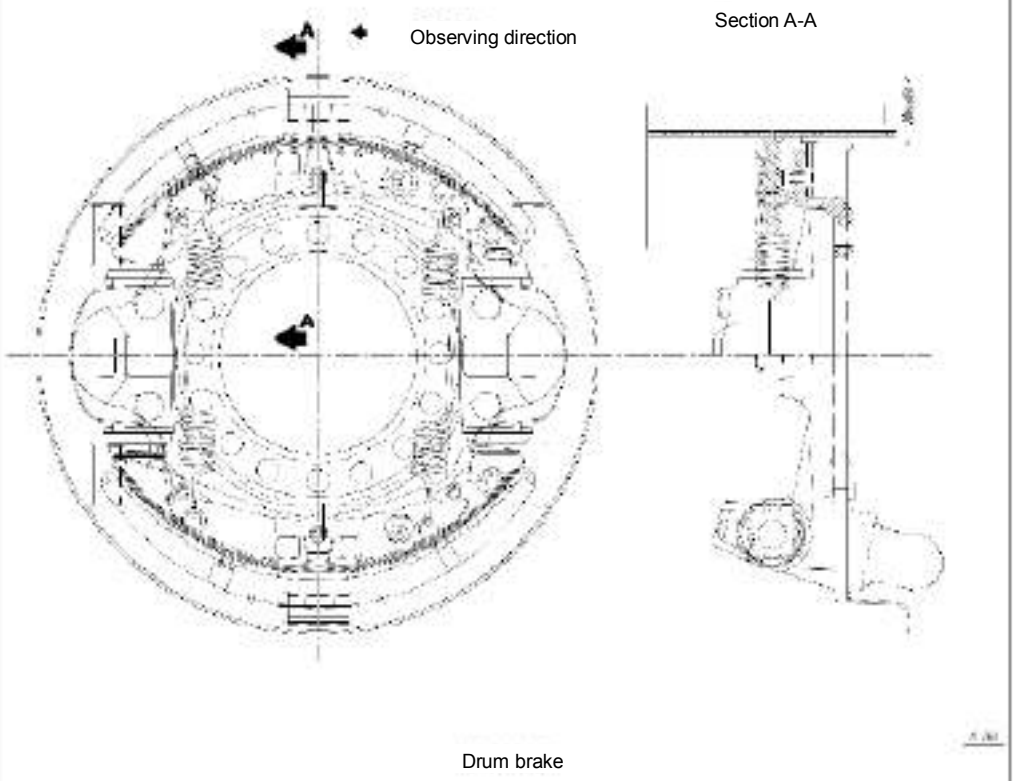

Drum brake

Brake

Overhaul the brake ASSY of the rear brake.

Disassembly

Figure 103

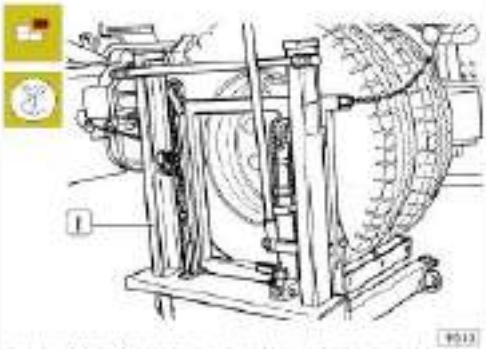

Stop the vehicle on level ground. Take off the cover, loosen and remove the nuts used to fix the wheels.
Lift the vehicle of the working side and support it on special stands.
Position the hydraulic trolley 99321024 under the wheels.
Take off the nuts fixing the wheel.

Figure 104

Fully unscrew the hand brake screw (2) of the combined wheel cylinder (1).

Figure 108

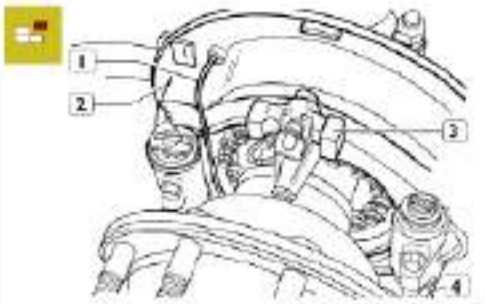

Take out the screws fixing the brake drum (1) to the wheel hub (2).
Disconnect the brake wear indicator cable (1) from the clips of the brake plate (3) and take the cable out of the guard (2).
Remove the lower shoe (4).

Figure 109

Figure 106

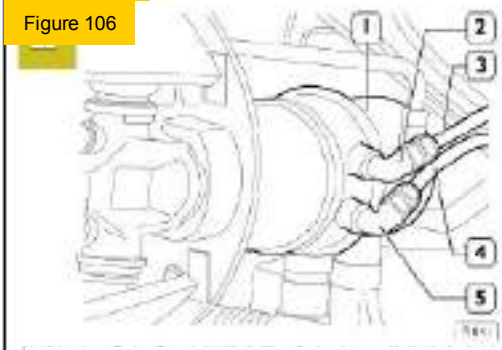

Disconnect the pipes (3 and 4) from the tube joint (5 and 2) and remove these parts from the combined wheel cylinder (1). Loosen the fixing ring nut with wrench 99356006, turn the combined wheel cylinder (1) counterclockwise and remove it from the brake body.

Figure 110

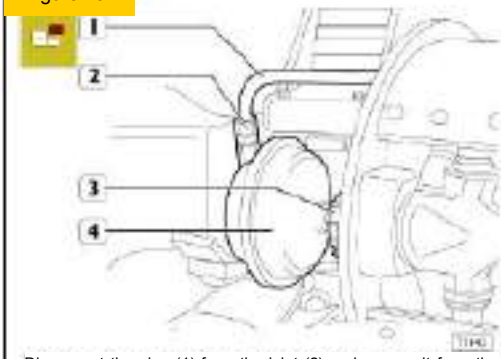

Disconnect the pipe (1) from the joint (2) and remove it from the diaphragm wheel cylinder (4). Loosen the ring nut (3) with 99366006.
Turn the diaphragm wheel cylinder (4) counterclockwise and remove it from the brake body.

Figure 111

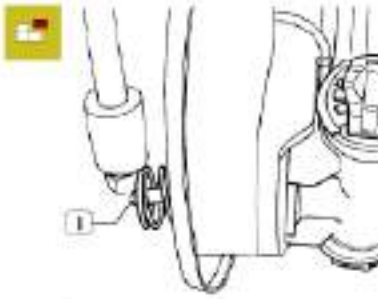

Extract the wedge-shaped control unit (1) from the b

Figure 112

Unscrew the guide pin (2) and take it out. Extract unit (1) together with the thrust pin from the brake bo

Figure 113

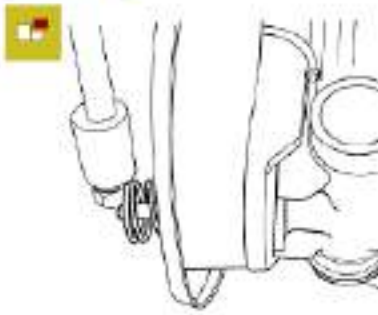

Unscrew the guide pin (2) and take it out.
Extract the reaction pin (1) together with the thrus brake body (3).

Figure 114

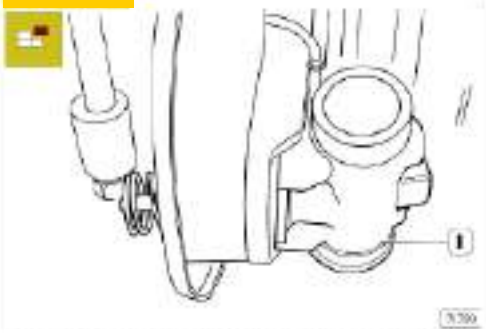

Check the wear condition of the pin seats on the brake body (1), if scored or excessively worn, replace the abnormal brake parts.
Examine the wear of the drums to decide if they can be reused.
Measure the diameter of the drums with a vernier gauge without adjusting the angle of the arm lever.
Measure the diameter at several points to inspect the roundness and wear; also take into consideration the depth of the scoring on the braking surface.
Permissible tolerance on roundness and/or eccentricity is 0.25mm.
If any wear or scorings are found and the braking surface can't be restored by turning, or clear signs of overheating, replace the drum (refer to Specifications and data table).
Check the conditions of the brake shoes and replace them if cracked.
If the brake surface of the lining shows signs of grease, the causes must be found and eliminated.
The minimum permissible thickness of the brake linings is 6.95 mm. If the thickness is found lower or only slightly bigger than this value, replace.
Check the wholeness and/or efficiency of the brake lining wear signal cable.
Check the wholeness and/or efficiency of the shoe return springs.

Figure 115

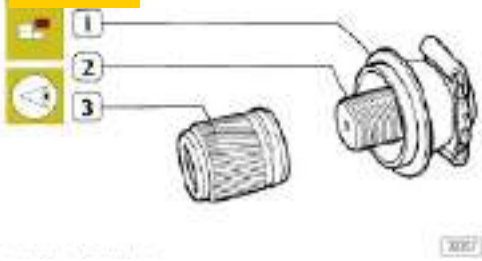

Disassemble the automatic adjustment unit.
Unscrew the adjustment bushing (3) from the adjustment pins (2) and then remove the seals (1).
Check the wear condition of the outer helical toothing of the adjustment bush and check whether the bushing is sliding freely on the relevant adjustment pins when screwed tight.

Figure 116

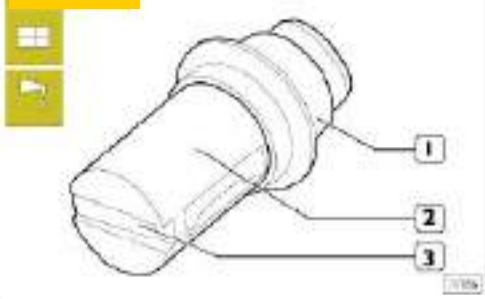

Take the seal (1) off the thrust pin (2). Check the wear conditions of the thrust pin (2), sloping surfaces (3) and the influence caused by the operation of rollers driven by shoe opening.

Figure 117

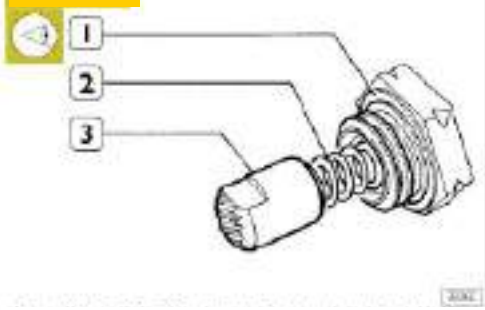

Check the condition of the toothed pressure pin (3) of the relevant compression springs (2) and the copper washers (1).

Figure 118

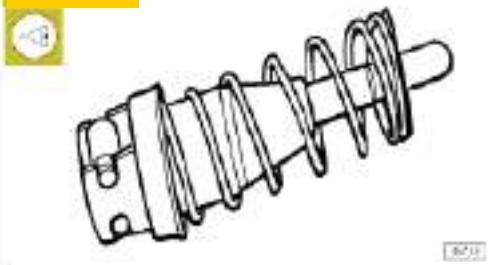

Check that the wedge units slide easily and without wear.

If wear is found on the wedge components, the complete unit must be replaced.

Brake drum turning

Measure the drum diameters by a gauge without bending the arms; measure the diameter in several points to make sure of ovality or wear.

Figure 119

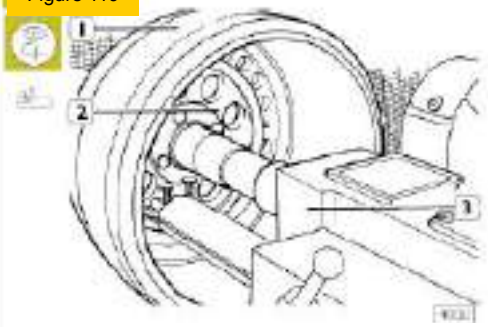

Fit tool 99372213 (2) inside the brake drum.
Fit this combined unit onto the lathe shaft 99301001 (3).
A set of spacers is fixed on the shaft to eliminate the end play of the units, tighten the lock nuts and place on the lathe support.
Fit the anti-vibration band on the brake drum.
Turn the drums sharply, rectifying the imperfections by turning enough material.
After turning, remove the drum brake and carefully clean it.

The permissible maximum diametric oversizing of the drum is indicated on the drum.
This limit can under no circumstances be exceeded as it may affect the braking effect and the drum resistance characteristics.

Choose suitable brake lining pairs for each drum according to the oversizing.
Linings of the same type are to be installed on each axle.

Replacing the brake linings

Figure 120

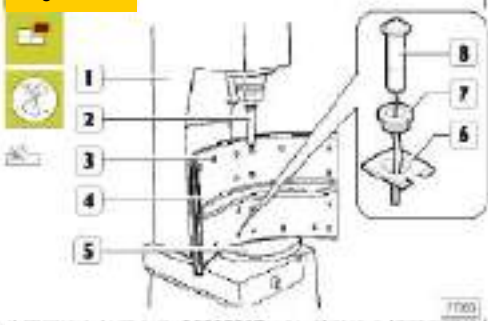

Remove the worn brake linings from the shoes with compressed air press 99305087 (1).

Note: From the lower shoes open the clip tabs (6) and release the bushing (7). Now remove the lining wear sensor (8) and associated cable.

Set the complete shoes (4) on an adjustable stand (5).
Shear the rivet heads (3) with a chisel (2) of the press tooling tip (1).
Take out the rivets from the shoes.
Carefully wash and blow clean the surface of the shoes.

Figure 121

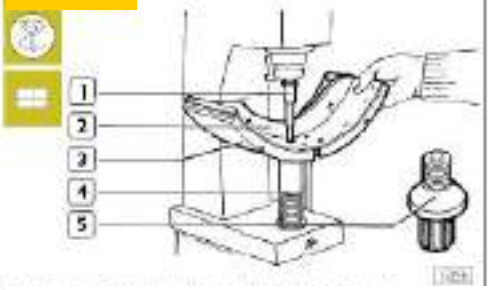

Place the contact pin (5) on the press moving support (4).
Rivet the brake linings (3) onto the shoes (2) with the beater (1) of the press tooling tip.

Note: To rivet the brake linings correctly, start from the center and gradually extend to the braking section.

Mount the seal wear cable by reversing the procedures of disassembly.

Turning the brake linings

Figure 122

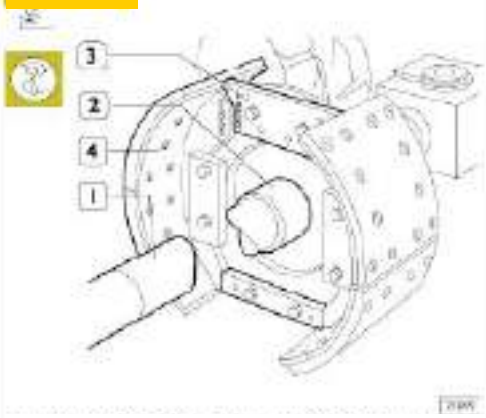

Mount the hub 99372228 (2) onto the shaft of the lathe 99301001 (1).
Mount the plate 99372230 (3) on the hub (2) and secure the brake linings (4), making the wording align as shown in the figure. Turn the brake linings.

Assembly

Figure 123

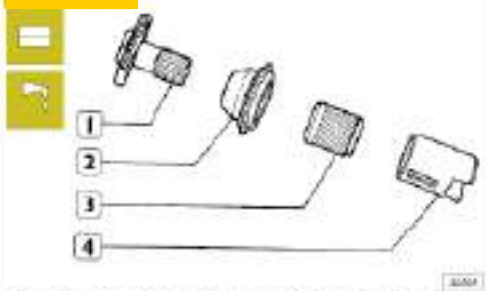

Mount the seals (2) onto the units of the adjustment pins (1). Apply grease to the thread of the pins (1).
Fully screw into the adjustment bushings (3) and apply grease thoroughly on the outside diameter.
Lubricate the inner diameter of the thrust pins (4) with grease.

Figure 124

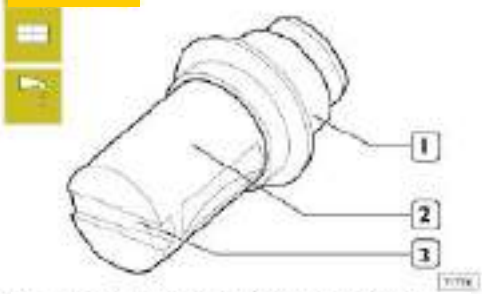

Apply grease to the seal (1) and fit it on the thrust pin (2).

When repairing the brakes, replace the seal provisions of the reaction and thrust pins.
Use grease to lubricate the components.

Figure 125

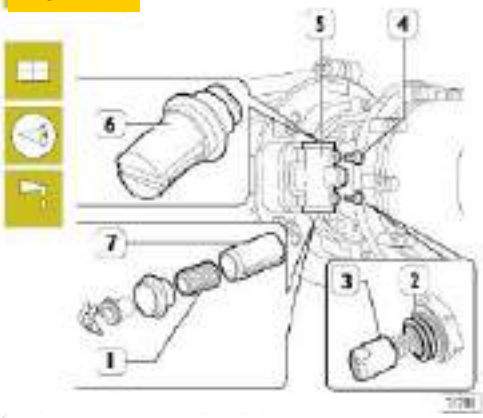

Lubricate the internal brake body (5) with grease.
Mount the seal assembly (6) of the thrust pin with the slot facing the guiding pin (4).
Insert the thrust pin (7) into the brake body (5) and insert the adjustment pin, seals and adjustment bushing assembly (1).

Take great care to follow the assembly order of the pins as illustrated in Figure 123.

Lubricate the guide pin assembly (4) with grease and insert it into the seat on the brake body (5). Check that the washer (2) is inserted and screw in a few turns.

Note: The guide pins (4) should be mounted so that the tips (3) can slide in the seats of the holes in the brake body (5).

Figure 126

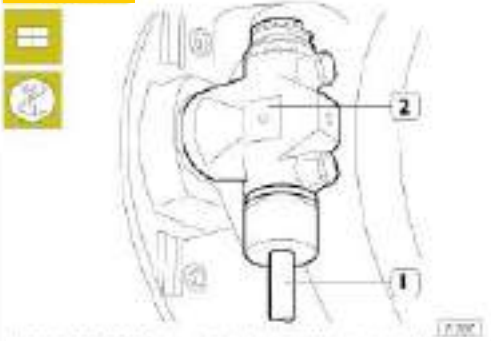

Using the key 99373002 (1), drive the metal rings of the seats into the brake assembly (2).

Figure 127

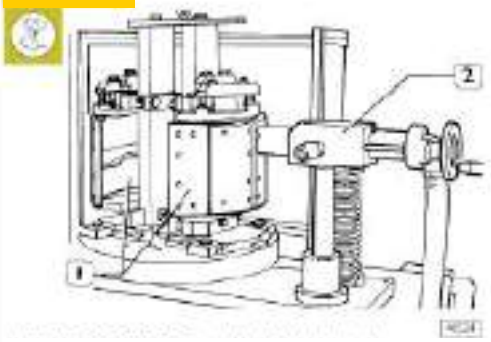

Turn the brake linings (1) using device 99301006 (2).

Figure 128

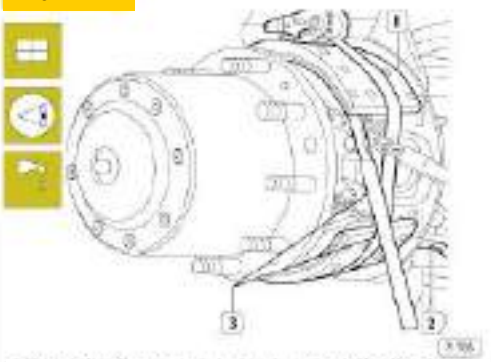

Connect the lining wear indicator cable electrical connection (2) to help fix the nuts onto the shoe. Mount the shoe (1) on the seat. Hook the shoe return springs with the aid of tool 99372211 (3).

Figure 129

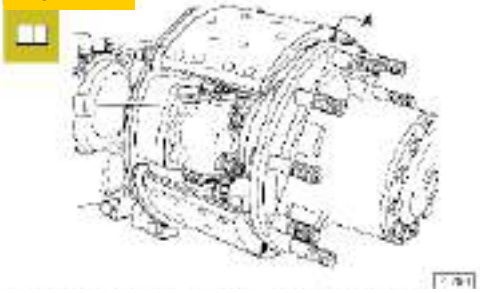

Unscrew the adjustment unit (1) until the diameter reaches A, 2 mm smaller than the mounting diameter of the brake drum.

Figure 130

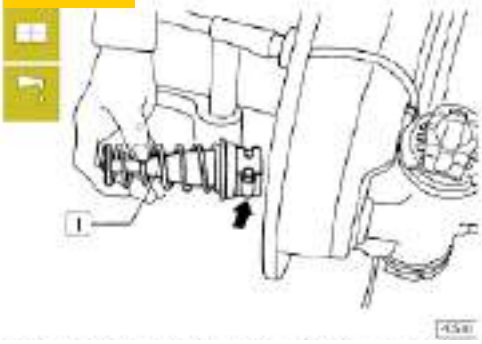

Lubricate the wedge-shaped control unit (1) with grease. Insert it into its seat, taking care that the rollers (⇒) are correctly positioned in the sliding race.

Figure 131

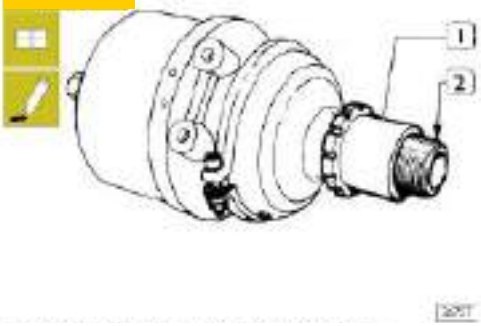

Push the ring nut (1) by hand into the sleeve (2) as far as it will go. Apply non-hardened sealant type LOCTITE 573 on the first few threads of the sleeve (2).

Figure 132

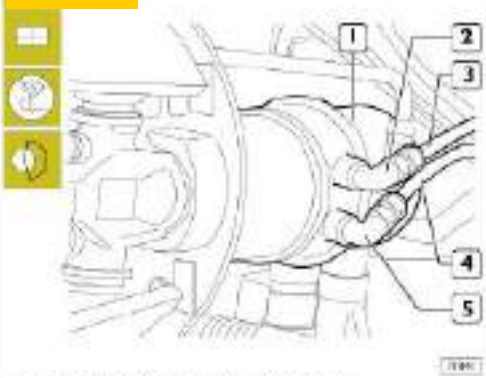

Screw the combined wheel cylinder (1) fully into its seat.
Check that the hole on the joint of the supply pipe is in the same position when removing; if not, loosen the combined wheel cylinder appropriately. Mount the pipe joints (2 and 5) and connect to the supply pipes (3 and 4). Supply air to the diaphragm sections of the combined wheel cylinder by applying service brakes. Tighten the ring nut to the required torque with wrench 99356006. Connect electrical connection for the brake lining wear indicator cable. Fully screw the screws (2, Figure 131) to restore the operation of the combined wheel cylinder (1).

Figure 133

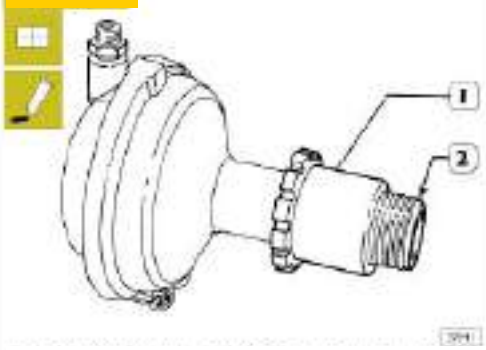

Push the ring nut (1) by hand into the sleeve (2) as far as it will go.
Apply sealer LOCTITE type 573 on the first three threads of the pipe (2).

Figure 134

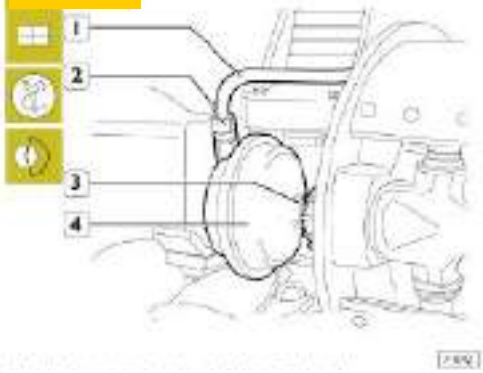

Fully screw the diaphragm wheel cylinder (4) down into its seat.
Check that the hole on the joint of the supply pipe is in the same position as when removing it; if not, loosen the diaphragm wheel cylinder (4) appropriately. Mount the pipe joint (2) to the diaphragm wheel cylinder (4) and connect to the supply pipe (1).
Supply air to the wheel cylinder by applying service brakes, tighten the ring nut (3) to the required torque with wrench 99356006.

Figure 135

Assemble the wheels and tighten the fixing nuts to the required torque according to the diagram shown in the figure.
Mount the brake assembly on the opposite side.
Start the vehicle's engine and run for a sufficient amount of time until the air system is filled.
When the vehicle is running, apply brakes several times to break-in the brake ASSY and check the clearance recovery between the brake linings and brake drum.

Chapter 10

Brake system
Brake

Page

Symbols of the circuit diagram of the brake system

Description	Symbol	
Air flow		
Crossover of connecting lines		
Pressure test point		
Quick-connecting coupling		
Towing connector		
Silencer		
Compressor	0 2	
Condensate separator		
Filter	1 2	
Dehydrator	1 2	
Dehydrator with in-built pressure-regulat or valve	21 22 23 1	
Manual drain valve		
Pressure regulator with independent circuit	1 21 22 23 24	
Pressure regulator valve	1 21	
Pressure limit valve	1 2	

32782 32783

Brake

Symbols for air/hydraulic system circuit diagrams

Description	Symbol	
Proportional reducing valve	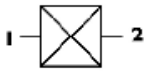	
Adapter valve	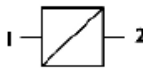	
Four-way protective valve	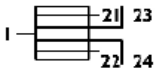	
Safety valve		
Check valve	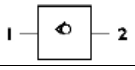	
Check valve		
Throttle valve		
Quick release valve	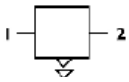	
Foot brake control valve	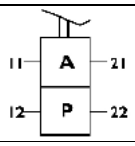	
Parking brake control valve	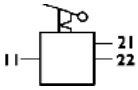	
Relay valve	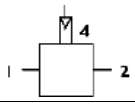	
Relay valve	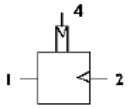	
Towing control valve	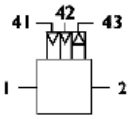	

(Air reservoir and accumulator)

Description	Symbol	
Compressed air tank		
Brake fluid reservoir		
Air spring		

Brake

32789

Symbols for air/hydraulic system circuit diagrams

(Indicators and switches)

Description	Symbol	
Pressure gauge		
Pressure gauge		
Pressure sensor		
Light		
Mechanical control switch		
Pressure switch		
Low pressure switch		
Audible warning		
sensor		

3506 pipes and couplings

General information

There are two types of pipes in the vehicle brake system:

- Nylon hose: Flexible nylon hoses with single or double-ply structure and spare parts with the following diameter are available: (Ø4,6,8,10 and 12mm).
- Steel pipe: Rigid metal pipe of the following diameters (Ø6, 8, 12, 15mm).

End formation of the steel pipe

Figure 1

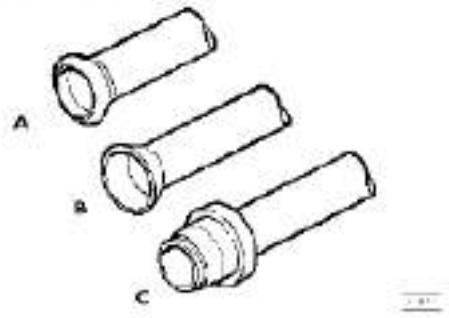

Types of the steel pipe end forming:

A Type end forming

Figure 2

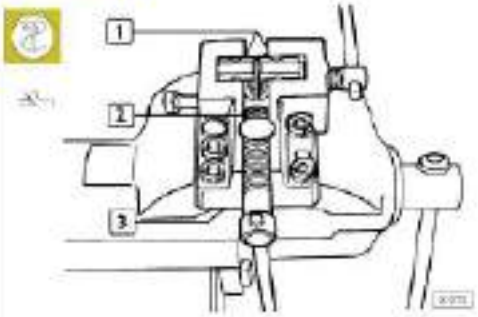

Position the blocks (1) on press 99386523 (3), put the press marked number indicating pipe diameter on the machining pipe towards the punching die (2). Choose punching die (2) according to the pipe diameter, every die (2) is marked with corresponding diameter.

Figure 3

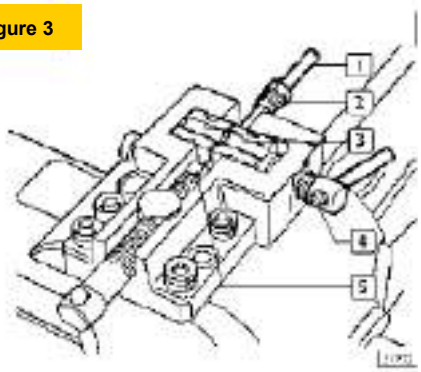

Chamfer pipe (1), place the straight joint (2) over it and position it between blocks (3) right against pin (5). Lock the pipe (1) with screw (4).

Figure 4

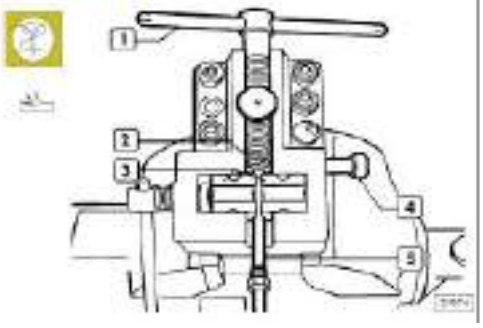

Move pin (4) to neutral position. Screw the screw (1) until the punching die (2) comes up against blocks (3); form the end of the pipe (5).

B Type end forming

Figure 5

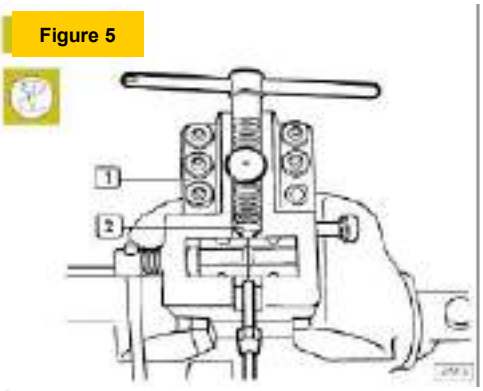

Mount the punching die (2) to press 99386523 (1). For the end forming procedure, please follow the above instructions for A type end forming.

C Type end forming

Figure 6

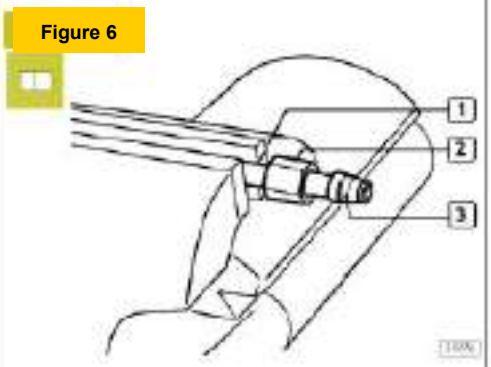

Install nut (2) and ring (3) onto the pipe (1).

Figure 7

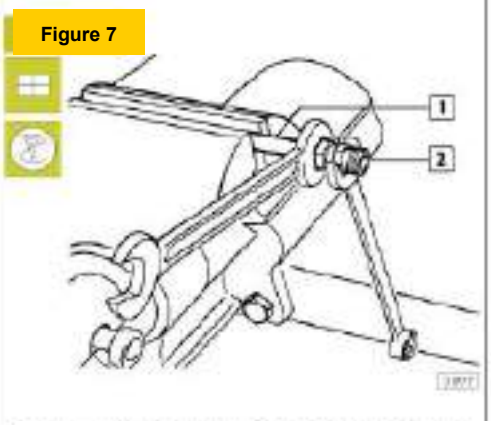

Mount the joint (2) and tighten so that the ring (3, fig. 6) is distorted, locking on the pipe (1).

Bending the rigid pipe

Figure 8

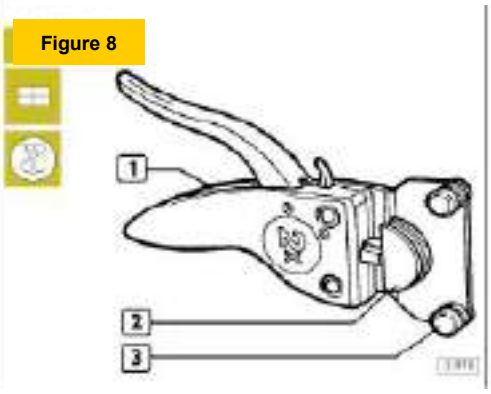

Assemble tool (1) 99386523, choosing parts (2) and (3) according to the diameter of the pipe being bent.

Figure 9

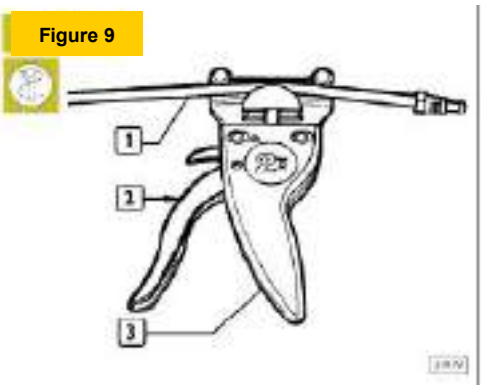

Position pipe (1) in tool (3) and bend pipe by pressing lever (2).

Figure 10

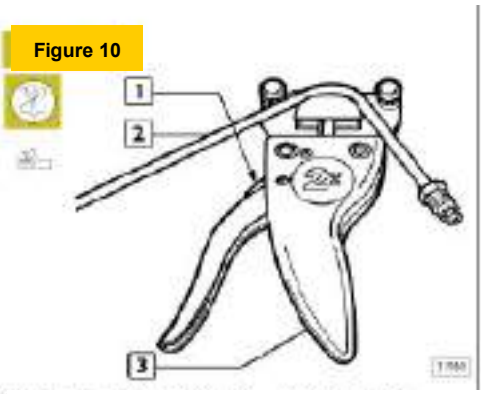

To release pipe (2) from tool (3), press catch (1).

Cutting rigid pipe

Figure 11

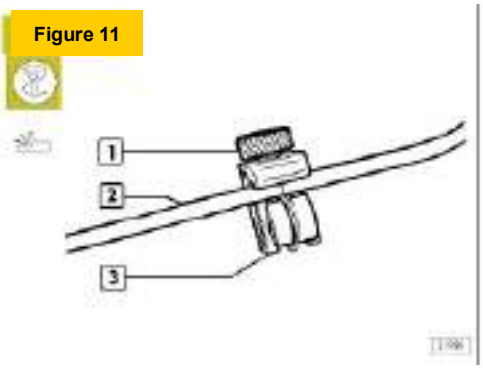

Position pipe (2) in tool (3) 99386523 and tighten screw (1).
Hold pipe (2) stationary, rotate tool (3) until the pipe is completely cut.

After cutting the pipe, chamfer the pipe and proceed to form the end as described above.

When tool (3) is rotating around pipe (2), screw (1) may loosen. To cut the pipe completely, it is therefore necessary to tighten the screw (1) as it becomes loose.

Nylon hose

Carefully follow the instructions below:

Figure 12

- Use only approved hoses.
- Check the condition of the replacement hose; there must be no cracks, cuts or incisions on it.
- Use suitable pipe cutting pliers 99387050, placed vertical to the central line and cut the pipe at the needed length.

Thread the pipe in the order given:

- Nut (3), pipe ring (2) (the thicker end towards the nut (3)) and reinforcing bush (1);
- the bush must be in perfect condition (free from any distortion or signs of hammering).

Figure 13

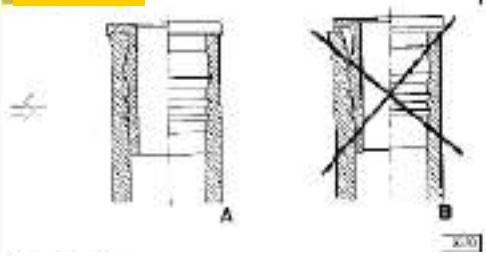

Assemble the reinforcing bush
A = the correct assembling mode
B = incorrect assembling mode

- Install the reinforcing bush with tool 99372219, verifying that the bush flange is contacting the end of the hose.
- Make sure that the end of the hose fits into the raked groove on the flange.
- End-form the seating bush when fitting to the vehicle or on the work bench to a joint.
- Apply pressure; make sure the final distance between the front edge distortion of the pipe ring and the reinforcing bush conforms to the specification listed in attached table.

If the joint is badly assembled, do not re-use the hose after extracting the bush and seating ring.

	Hose mm	Distance between edge of bush and ring mm (*)	Assembly pressure N/mm^2
Double-layer	6×1	from 1 to 1.5	0.040
	8×1	from 2 to 2.5	0.050
Single layer	10×1.5	from 2 to 2.5	0.050
	12×1.6	from 2 to 2.5	0.060
	16×2.34	from 3 to 3.5	0.060

(*) refer to h, Figure 14.

Figure 14

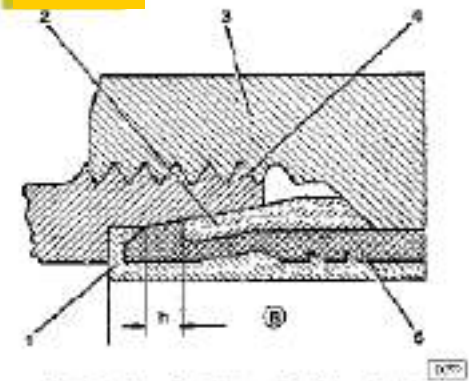

1. Reinforcing bush —— 2 pipe ring —— 3 nut —— 4 joint
5 Nylon hose - h. Distance between edge of bush and edge of ring (refer to the attached table).

Insert the end of the hose into the joint body until the reinforcing bush flange bears against seating;

- To tighten nut onto the joint, first please screw in all the screws by hand and then tighten the nuts to the specified tightening torque with a box wrench fitted on the torque wrench.

When connecting the hose to the vehicle, bear in mind some of the important points:

- When bending, do not exceed the minimum radius, so as to prevent blockage:

Diameter of pipe mm mm	Minimum bending radius mm mm
6 x 1	≈ 40
8 x 1	≈ 60
10 x 1.5	≈ 60
12 x 1.6	≈ 75
16 x 2.34	≈ 100

Make sure the hoses are not in contact with sharp edges or with sharp metal parts or sources of heat; keep a safety distance of at least 15mm from them.

- When hoses run through chassis beams or metal parts, make sure that the holes passing through are fitted with rubber grommets and that they are in good condition.
- Avoid sliding the hose along sharp edges which might cause cuts.
- Where the hose has to be attached to the existing pipelines, take account of the additional heat to which it may be subjected (power steering mechanism pipelines); in this case, protect the hose with heat insulation material.
- When the hoses are connected, check and verify that the hoses between joint points are not taught, but are slack to allow for thermal expansion. The short hoses, in particular, should be like this.
- Before fitting, thoroughly clean the hoses by blowing compressed air through them to secure operation of the system.

Figure 15

- Protect the hoses if grinding or welding operations are carried out on vehicle; a notice is fitted in the cab, strictly follow the instructions indicated to avoid damage.

For greater safety and convenience of operation, it is suggested to remove the hoses during these operations.

When fitting is finished, ensure that all seals (joints, couplings etc.) are completely free from leakage.

Replace flexible hoses with quick-connection Couplings

Swivel couplings:

Figure 16

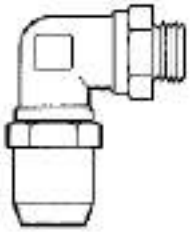

Screw the coupling into the threaded seating on the air valve and tighten it to the tightening torque indicated in the attached table.

Banjo couplings:

Figure 17

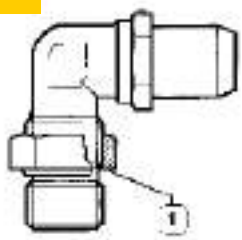

- Check the seal ring (1) in its seat;
- Tighten the coupling until the seal gasket contacts the valve;
- Direct the valve correctly and keep the movable part still; lock the hexagon nut to the torque indicated in the table.

Swivel and banjo couplings:

Coupling thread	Tightening torque (Nm ± 10%)
M 10 x 1.0 mm	22
M 12 x 1.5 mm	24
M 14 x 1.5 mm	28
M 16 x 1.5 mm	36
M 22 x 1.5 mm	40

Figure 18

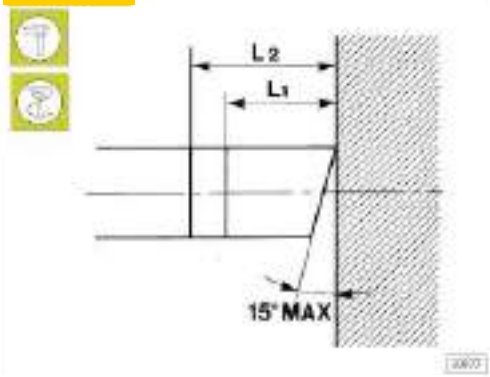

- Use only approved type-tested hoses;
- Check the condition of the new hose to ensure it has no cracks, cuts or scores;
- Put the hose at 90° with the axle and cut, the maximum error is 15° . Use pipe cutting pliers 99387050 to cut the hose at needed length;

Figure 19

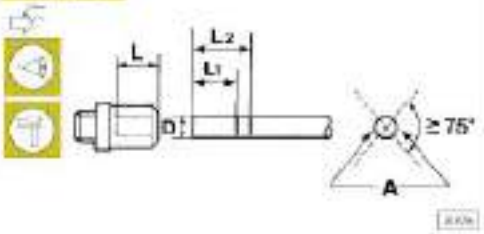

A = Mark to identify end of tube travel

Use oil-based ink to make two clear reference marks on both diametrically opposite faces of the pipe at an angle of ≥75° , set at distances L_1 and L_2, to ensure correct fitting.

L_1 and L_2 vary according to the diameter of the hose; measure the longer part of the hose (see Figure 18).

D (mm)	$L^{0}_{+0.5}$ (mm)	$L^{-0.5}_{1+1}$ (mm)	$L^{-0.5}_{2+1}$ (mm)
6	19.8	17	22
9	20.5	18	23
12	25	22	28
16	27.1	24	30

Figure 20

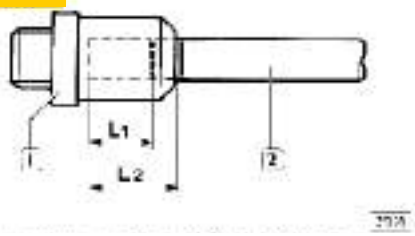

- Insert the hose (2) by hand into the coupling (1) with a force between 30 and 20 Nm according to the hose diameter, so that reference mark L_1 is inside the hose whereas L_2 remains visible.

Figure 21

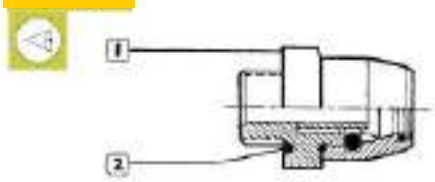

When removing couplings (1) on pneumatic components, check the condition of the seal ring (2) and replace it if necessary.

Coupling thread	Seal ring dimensions
M 10 x 1.0	10.1 x 1.6
M 12 x 1.5	11.0 x 2.0
M 14 x 1.5	-
M 16 x 1.5	15.0 x 2.0
M 22 x 1.5	-

Whenever a hose is removed from a quick connection coupling, the coupling itself must be replaced too. Spare quick connection couplings are supplied in a complete set.

Quick release and threaded couplings are not interchangeable. flexible hoses used with quick release couplings and flexible hoses used with threaded couplings are supplied.

Brake system work drawing (4X2)

Figure 27

Brake system work drawing (6X4)

Figure 28

Layout of the major components of the vehicle brake system

Figure 32

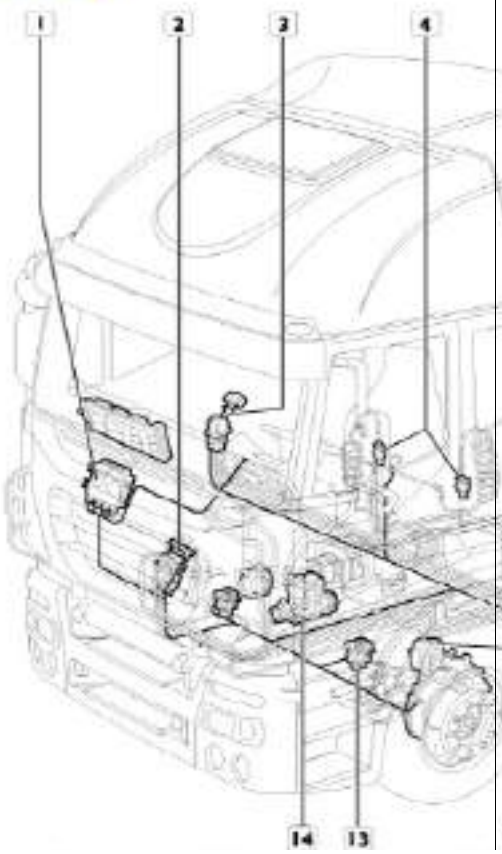

(1) ABS control valve (2) foot brake valve (3) hand brake valve (4) towing connection (5) air reservoir (6) relay valve (7) towing valve (8) air reservoir (9) brake chamber (10) four-way protective valve (11) air drier (12) front brake chamber (13) ABS braking valve (14) compressor

Service brake

Pneumatically controlled pedal types operate on all the wheels and the trailer.

It employs a double-loop system that divides into two independent proportions, one controls the brake components of the front axle and the other controls brake components of the rear axle. There's a third section which provides brake operation to the trailers.

When one of the loops malfunctions, the double-loop system can guarantee the normal operation of the other loop.

Emergency braking

This is a combined type parking brake.

Even when one of the the other axle by employing both service brake pedals and hand brake valve levers.

Retard auxiliary braking

It's mainly an exhaust brake and engine brake, which can use only exhaust brakes and the exhaust brakes and engine brakes together.

Brake

Drum brake

Each brake ASSY is an integral body with the adjustment arm, control pins and brake cam.

The brake cam is driven by the brake chamber lever operated by compressed air.

The brake cam rotates, overcoming the resistance of the return spring of the brake shoe, pushes the brake shoe to the drum, thus braking is performed.

The adjustment and control pins are integrated into the brake body; both of the two pins are fixed in a groove on one side. When the brake operation ends, there is no air pressure in the diaphragm chamber ber ake the the brake shoe is brought back to the previous position.

Engine exhaust brakes are to cut off the fuel supply of the fuel system and block the exhaust pipe, thus the engine works as a compressor to consume the vehicle's energy to reach the purpose of slowing.

The engine brake of a Cursor engine is composed of a hydraulic control mechanism which reduces the valve clearance of the exhaust valves. By applying this mechanism, at the end of the compression stroke, a few degrees before the T.D.C., the exhaust valves open slightly with a consequent reduction in the pressure formed in the cylinders. This takes advantage of the braking torque of the compression stroke without having the following return force on the piston.

Parking brake

Activated by pulling up the hand brake valve lever. It acts on the rear wheels of the towing vehicle, exhausting the compressed air in the rear spring brake chamber via relay valve, locking the trailer or wheel of trailer by the spring force..

The driver can check the usability of the trailer at his/her seat by releasing the trailer brake to ensure the availability of the combined tractor-trailer parking brake.

Diagnosis

Chapter 1

Diagnosing instrument

The diagnosing instrument provides simple diagnosis and configurations for every on-board ECU.
The system is made up of ECI module communicating with the ECU and of a notebook computer.

Figure 33

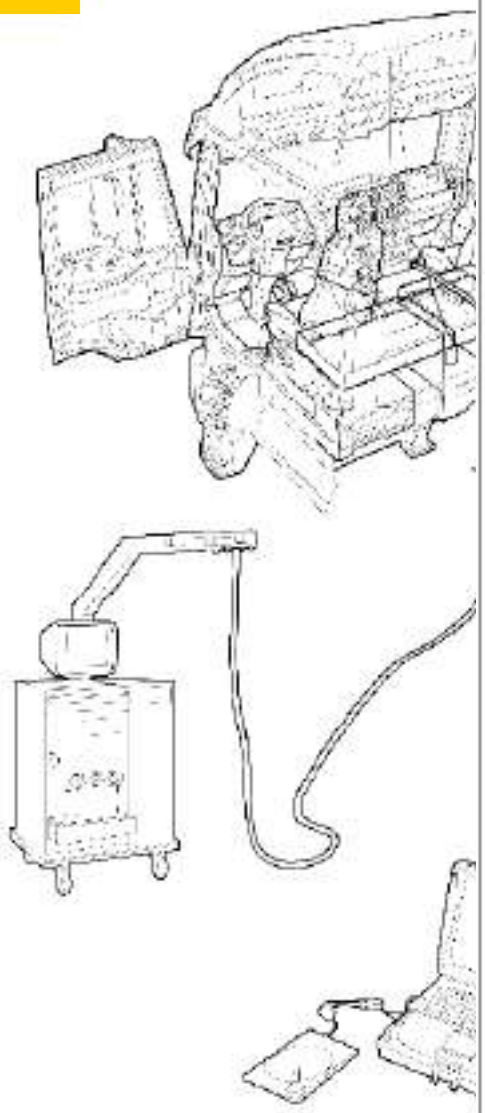

Enter the diagnosis screen by pressing the switches "☛" "☚" on the instrument panel.

Figure 34

EDC	20011	30	127
IBC	22133	01	3
ECAS	20308	00	1

Diagnosing information on the cluster is classified into 4 columns:

- First column = central unit.
- Second column = central unit address plus fault number.
- Third column = failure type
- Fourth column = failure frequency.

The screen shows three error messages at most, but can store up to eight error messages. For information display, just operate "☛" and "☚" buttons.

Diagnosis on instrument panel

Chapter 2

Major operational malfunctions in the brake system:

8- Poor or abnormal inflation of the system.
9- Poor or abnormal brake of the rear axle service brake.
10- Poor or abnormal brake of the front axle service brake.
11- Poor or abnormal brake of the trailer service brake.
12- Poor or abnormal parking brake.
13- Poor or invalid parking brake of the trailer
14- Too slow release of the parking brake
15- Too slow release of the trailer parking brake
16- Vehicle slips when braking
17- Poor braking efficiency of the trailer retarder
18- Quick wear-out of the brake linings
19- Brake system malfunction indicator lamp lights up
20- Parking brake indicator lamp lights up with lever in drive position.
21- Noisy brakes

Inadequate or abnormal inflation of the system

Pneumatic system pipelines leaking or broken. — Yes → Tighten or change the loosened or damaged couplings. Change the cracked or damaged pipes.

No ↓

Failed air compressor. — Yes → Overhaul or replace the air compressor.

No ↓

Pressure regulator in drier broken down. — Yes → Overhaul or replace the drier.

No ↓

Four-way safety valve is faulty. — Yes → Overhaul or replace the four-way safety valve.

2 Poor or abnormal efficiency of the rear axle service brake

Leakage or breaking in pneumatic system pipes.	Yes	Tighten or replace the loosened or damaged couplings. Replace cracked or damaged pipes.
No		
Braking control malfunction	Yes	Adjust, overhaul and, if necessary, replace the brake control.
No		
Worn or vitrified brake linings	Yes	Overhaul or replace the brake linings.
No		
Rear brake malfunction	Yes	Overhaul the rear brakes.
No		
Duplex distributor malfunction	Yes	Overhaul or replace the Duplex distributor.
No		
Wheel cylinder S malfunction	Yes	Overhaul or replace the wheel cylinder S.

3 Poor or abnormal efficiency of the front axle service brake

Leakage or breakage in pneumatic system pipes	Yes	Tighten or change the loosened or damaged couplings. Change the cracked or damaged pipes.

(continued)

Duplex distributor malfunction	Yes	Overhaul or replace the Duplex distributor.
No		
Worn and/or vitrified brake linings	Yes	Overhaul or replace the brake linings.
No		
	Yes	Overhaul the front brakes.
No		
Diaphragm wheel cylinders malfunction	Yes	Overhaul or replace the diaphragm wheel cylinders

Poor or abnormal brake efficiency of the trailer service brake

Leakage or breakage in pneumatic system pipes	Yes	Tighten or change the loosened or damaged couplings. Change the cracked or damaged pipes.
No		
Triple control servo distributor is faulty.	Yes	Overhaul or replace the triple control servo distributor.

(continued)

Duplex distributor malfunction.	Yes ►	Overhaul or replace Duplex control valve.
No ▼		
Pressure reducer malfunction.	Yes ►	Overhaul or replace pressure reducer.
No ▼		
Worn or vitrified brake linings.	Yes ►	Overhaul or replace the brake linings.
No ▼		
Trailer brake malfunction	Yes ►	Overhaul the trailer brake.
5 **Poor efficiency or invalid parking brake**		
Leakage or breakage in pneumatic system pipes	Yes ►	Tighten or replace the loosened or damaged couplings. Replace cracked or damaged pipes.
No ▼		
Combined type wheel cylinder malfunction.	Yes ►	Overhaul or replace the combined type wheel cylinder.
No ▼		
Parking brake hand lever malfunction.	Yes ►	Overhaul or replace the lever.
No ▼		
Worn or vitrified brake linings.	Yes ►	Overhaul or replace the brake linings.

(continued)

Relay valve malfunction.	Yes ►	Overhaul or replace the relay valve.

6 Poor efficient or invalid trailer parking brake

Leakage or breakage in pneumatic system pipes.	Yes ►	Tighten or replace the loosened or damaged couplings. Replace cracked or damaged pipes.
No ▼		
Triple control servo distributor malfunction	Yes ►	Overhaul or replace the triple action servo control valve.
No ▼		
Parking brake hand lever malfunction.	Yes ►	Overhaul or replace the lever.
No ▼		
Worn or vitrified trailer brake linings.	Yes ►	Overhaul or replace trailer brake linings.
No ▼		
Trailer brake malfunction.	Yes ►	Overhaul the trailer brake.

7 Delayed parking brake release

Leakage or breakage in pneumatic system pipes. — Yes → Tighten or replace the loosened or damaged couplings. Replace cracked or damaged pipes.

No ↓

Relay valve malfunction. — Yes → Overhaul or replace the relay valve.

No ↓

Combined type wheel cylinder S malfunction. — Yes → Overhaul or replace the combined type wheel cylinder S.

No ↓

Parking brake hand lever malfunction. — Yes → Overhaul or replace the lever.

No ↓

Rear brake malfunction. — Yes → Overhaul rear brakes.

8 Delayed trailer parking brake release

Leakage or breakage in pneumatic system pipes. — Yes → Tighten or replace the loosened or damaged couplings. Replace cracked or damaged pipes.

No ↓

Triple control servo distributor malfunction. — Yes → Overhaul or replace the triple action servo control valve.

(continued)

Parking brake hand lever malfunction.	Yes ►	Overhaul or replace hand lever.
No ▼		
Trailer brake malfunction.	Yes ►	Overhaul the trailer brake.

9 The vehicle pulls to one side when braking

Leakage or breakage in pneumatic system pipes.	Yes ►	Tighten or replace the loosened or damaged couplings. Replace cracked or damaged pipes.
No ▼		
Duplex distributor malfunction.	Yes ►	Overhaul or replace Duplex control valve.
No ▼		
Brake control malfunction.	Yes ►	Adjust, overhaul and, if necessary, replace the load proportioning valve.
No ▼		
Front brakes malfunction.	Yes ►	Overhaul the front brakes.
No ▼		
Rear brake malfunction.	Yes ►	Overhaul rear brakes.
No ▼		
Triple control servo distributor malfunction.	Yes ►	Overhaul or replace triple action control valve.

10 Poor efficiency of the trailer retard brake

Leakage or breakage in pneumatic system pipes	Yes	Tighten or replace the loosened or damaged couplings. Replace cracked or damaged pipes.
No		
Pressure reducer malfunction	Yes	Overhaul or replace pressure reducer.
No		
Triple control servo distributor malfunction	Yes	Overhaul or replace triple action control valve.
No		
Parking brake hand lever malfunction	Yes	Overhaul or replace the lever.

11 Quick wear of the brake linings

Duplex distributor malfunction	Yes	Overhaul or replace Duplex control valve.
No		
Brake control malfunction	Yes	Adjust, overhaul and, if necessary, replace the load proportioning valve.
No		
Brake malfunction	Yes	Overhaul brakes.

(continued)

Triple control servo distributor malfunction.	Yes	Overhaul or replace the triple action control valve.
No		
Relay valve malfunction.	Yes	Overhaul or replace the relay valve.

12 Brake system malfunction indicator lamp light up

Leakage or breakage in pneumatic system pipes.	Yes	Tighten or replace the loosened or damaged couplings. Replace cracked or damaged pipes.
No		
Four-way safety valve malfunction.	Yes	Overhaul or replace four-way protection valve.
No		
Indicator lamp electrical circuit badly wired.	Yes	Find the incorrect connection and rectify wiring.

13 Parking brake indicator lamp lights up when the hand lever is in service position

Indicator lamp electrical circuit badly wired.	Yes	Find the incorrect connection and rectify wiring.
No		
The hand lever for parking brake malfunction.	Yes	Overhaul or replace the lever.

(continued)

Pressure reducer operating normal.	Yes ►	Overhaul or replace pressure reducer.

14 Noisy brakes

Worn brake linings.	Yes ►	Replace the brake linings.
No ▼		
Shoe return springs malfunction.	Yes ►	Overhaul the rear brakes.
No ▼		
The elliptic deformation of the brake drums exceeds prescribed tolerance range.	Yes ►	Grounding or, if necessary, replace the drums.

Tightening Torque

Description	Torque	
	Nm	**(kgm)**
Air compressor		
Compressor		
Head fastening screws	30	(3)
Pulley fastening nut	190^{+1}_{-0}	(19)
Brake chamber		
Wheel cylinder ring nut	300+30	(30±3)
hand brake release screw	15+20	(1.5+2)
Diaphragm wheel cylinder (for drum brakes)		
Wheel cylinder ring nut	300^{+30}	(30±3)
Front axle		
Ring nut used to fix the wheel bearings	515±30	(51±3)
Cylinder head socket head screws to lock the wheel bearing adjustment clamp	27±3	(2.7±0.3)
Wheel securing nut	600^{+50}_{-20}	(60^{+5}_{-2})
Wheel hub cover ▣	130±10	(13±1)
Tapered thread plug for wheel hub cover	50±5	(5±0.5)
▣ Deposit a sealer bead only on hub cover ledge surface, using a special dispenser. Protect the threaded section. Use LOCTITE TYPE 574 as sealant.		
Screw used to fix drum	25±3	(2.5±0.3)
Cover securing screw■	50±5	(5±0.3)
Slotted screw	50±5	(5±0.5)
Wheel securing nut	615±35	(61.5±3.5)

TOOLS

TOOL NO.		Description
99301001	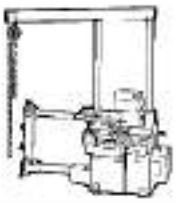	Grinding and turning machine for brake discs and drums
99301005		Brake disc turning equipment
99301006	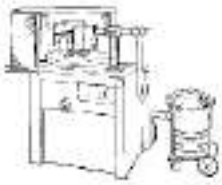	Brake shoe turning equipment
99305079		Brake shoe turning equipment
99305087		Rivet press
99305117		Instrument to inspect the air circuit

TOOLS

TOOL NO.		Description
99305121		Hot air gun
99341003	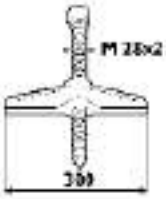	Single-acting bridge
99321024		Hydraulic trolley to remove and install the wheels
99327001	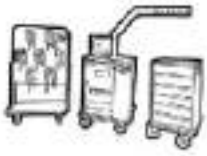	Modus station
99327030		Hydraulic trolley to remove and install the wheels
99341015	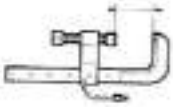	Clamp

TOOLS

TOOL NO.		Description
99341020	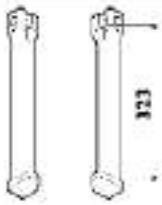	Pair of tie rods with clamps
99341023		Clamps
99341026	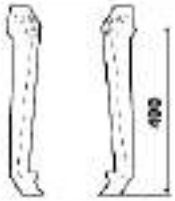	Pair of pulling arms
99345049		Reaction block for extractors
99345053		Reaction block for extractors
99345055		Reaction block for extractors

TOOLS

TOOL NO.		Description
99345103	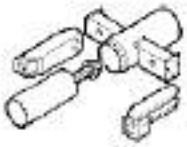	Wheel hub assembling tool
99348001		Extractor with lock device
9938004		Universal plug-in type extractor, 5-70mm
99354207		Wrench for wheel hub cover
99355167		Wrench (114 mm) for wheel hub bearing adjusting nuts
99356001		Adjusting wrench for wheel brake shoe

TOOLS

TOOL NO.		Description
99356006		Wrench for removal and assembly of the wheel cylinder ring nuts
99370005		Handles with interchangeable drivers
99370006		Handles with interchangeable drivers
99370007		Handles with interchangeable drivers
99370317		The reaction lever with extended lever used to fix the flange
99370715		Tube used to assemble the wheel hub

TOOLS

TOOL NO.		Description
99372211		Tool to remove and reinstall the brake shoe retaining springs
99372213	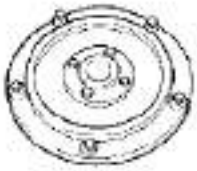	Tools used to machine the brake drum
99372228		Hub used to position the disassembled floating shoe turning tools on lathe 99301001
99372230		Tool for turning the disassembled floating shoes (used with 99301001 - -99372228)
99372237		Tool used to assemble the protective tube for the brake caliper sliding bushing
99372238	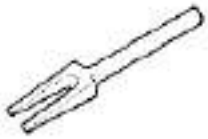	Tool used to take out the thrust unit of the brake caliper

TOOLS

TOOL NO.		Description
99372239		Tool used to assemble the thrust unit with brake caliper protective tube
99372240		Tool used to remove and reinstall the guide bushings for the brake caliper sliding bushing (used with 99372237 for assembly)
99372241		Tool used to press bonding the guide bushings of the brake caliper sliding bushing
99373004		Special tool used to remove the sealing gasket (Rockwell) of the wheel cylinder
99374025		Installer, wheel hub internal sealing parts (used with 99370005)
99374093	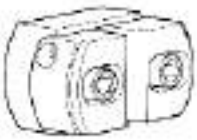	Drivers used to mount the bearing outer ring 91-134mm (used with 99370007)

TOOLS

TOOL NO.		Description
99387050		Cutting pliers for nylon pipes
99388001		Wrench (80 mm) for wheel hub bearing adjusting nuts

Specifications and data - pneumatic system

Description						
Compressor. ❑ **Type:** Displacement						
Circuit	1	2	3	4	3	4
Second installation	21	22	23	24		26
Opening pressure (The circuit 1+2 be filled first)	$7.5^{+0.2}_{0}$		$8.0^{0}_{0.2}$			
Opening pressure of the integrated safety valve			> = 9.2			
Static closing pressure. (Without compensation, 0 bars in the circuit when out of service)	6.5±0.25		6.5±0.25			
Working pressure			8.5 -0.3		8.5 -0.5	
Oil pressure limiter on/off pressure difference			< = 0.65			
Air reservoir Air reservoir for front axle brake Air reservoir for intermediate and rear axle brake Parking + trailer Service tank						
Four-way distributor valve ❑ **Type:** Supply pressure Working pressure						
Relay valve ❑ **Type: KNORR - BREMSE - RP2A** Max. working pressure						
Description						
Parking brake distributor (stand-alone vehicles) ❑ **Type: KNORR DPM 61EY** Supply pressure Travel of control lever (discharging) when starting emergency brake (start point of resistance) Parking brake						
Air pressure switch ❑ **TDS F13043 - F13047** Working pressure Setting pressure When increasing pressure						

When decreasing pressure

ABS wheel anti-lock brake control valve

- ❑ **Type: WABCO 472,195,055 0**
  Maximum working pressure
- ❑ **Type: KNORR - BREMSE IC 57664**
  Maximum working pressure

Check valve

- ❑ **Type: VOSS 02 68 91 42 00**
  Max. working pressure
  Impedance pressure

Inflating valve.

- ❑ **Type:**
  Working pressure

Pressure sensor

- ❑ **WABCO 441,040,015 0**
  Measuring principle
  Permitted over pressure

Diaphragm brake chamber

- ❑ **Type 14: KNORR EF 141 AY**
  Maximum working pressure
  Sleeve length
  Stroke

Rear brake chamber

- ❑ **Type 16/24 HF: KNORR 1 C 56449**
  Maximum working pressure
  Spring load

Diaphragm brake chamber

- ❑ **Type 22:**
  Maximum working pressure
  Sleeve length
  Stroke

Combined type brake chamber

- ❑ **Type 16/24 HF:**
  Spring load
  Stroke
- ❑ **Type 18/24 HF:**
  Spring load
  Stroke

Specifications and data – brakes

	Drum brake	FRONT AXLE	Driving axle
	Drum diameter: - Normal - 1st oversizing mm - 2nd oversizing mm	410 ÷ 410.4 412 ÷ 412.4 414 ÷ 414.4	
	Brake lining thickness: - Normal - 1st oversizing mm - 2nd oversizing mm - Minimum permissible	22.95 23.95 24.95 6.95	
	Diameter of brake linings: - Normal - 1st oversizing mm - 2nd oversizing mm	408 ÷ 409 410 ÷ 411 412 ÷ 413	
	Width of brake linings: L mm	179 ÷ 180	
	Clearance between brake linings and drum: G mm	0.5 ÷ 1.2	
	Maximum error of concentricity in the drum diameter after turning E mm	0.04	
	Wheel hub		
	Wheel hub bearing	Two, with tapered rollers Set up	

		correct.	
	Hub bearing end plays mm	Not adjustable	
	Hub bearing end play adjustment	Tightening to required torque with ring nut	
	Wheel hub bearing rolling torque	0.50 max	-

▣

Inspection of major components of braking system.

The said brake system must be inspected periodically with tool 99305117.
The inspection is done on the compressed air in the reservoir when the vehicle is stopped; when the
starts, the reservoir will be inflated again by the compressor.

Always block the vehicle before starting any type of operation. Periodically check the
comparing them with a master gauge.

DEVICE	Description	Inspection
	Compressor.	Check the sealing of pipe couplings and that the compressor is se sure the cooling fins are not dirty.
	Dehydrator	Operate the drain valve or loosen the plug (drain hole) to chec drier is running correctly. Air from the tank should be free condensation.
	Air reservoir ❑ FRONT AXLE ❑ Rear axles ❑ Parking + trailer ❑ Service tank ❑ Recharging tank	Inspect he seal and anti-rust protection. Discharge the condensation from the tanks through the drain val
	Four-way safety valve	Inspection: Maximum opening pressure 8 bar Static closing pressure 6.5 +0.5 bar -0
	Hand brake valve	Operate the parking brake distributor until it triggers; the gauge c socket is to indicate the pressure discharge 0 bar in 1 second. The automatic coupling joint pipe and the gauge are to indicate, time, a pressure of 8.5 bar.
	Diaphragm brake chamber	Check fastening, integrity and sealing. The drain hole should be directed downwards and not clogged.
	Combined type brake chamber	Check fastening, integrity and sealing. The drain hole should be directed downwards and not clogged.
	Relay valve	Check the operation and sealing, evaluate the wheel cylind speed.
	Engine brake control cylinder	Check the operation and sealing of it.
	Pressure reducer	Check the set pressure (refer to Specifications and data table) Check the operation

Figure 35

Figure 36

Towing valve	Fill the tank. Connect a gauge to the automatic coupling head and to a variable coupling head respectively. When the output pressure of the Duplex distributor reaches 1 bar, the pressure of the variable coupling head should be between 0.8 and 1.5 bar. Make a full brake (vehicle The pressure ad must be the required value, or 0.5 below the required value. Activate the parking brake; the pressure of the variable coupling head should remain the same, or be reduced by 0.5 bar.
Towing connector	Check the towing connector guide tube for dirt or damage. After coupling, operate the brake pedal and check the sealing and stability between the coupling heads when delivering air at 7.5 bar. Check and verify that no air leaks from the coupling gaskets.
Rear drum brake	When the pedal is released, the shoe should return quickly and evenly to its home position. Check the clearance between the brake shoe and drum. Check the thickness of the brake linings.
Drum brake	When the pressure on the pedal disappears, the shoes must return to the rest position quickly and evenly on all the wheels. Check the clearance between the brake shoe and drum. Check the thickness of the brake linings.
Pipes and couplings	Make sure that the metal pipes are in goods condition, with no dents or cracks. The nylon hoses must have no cracks, cuts or scores. Make sure that the pipelines are not approaching any sharp edges of the body or chassis that may cause damage. Check that all the brackets fastening the pipes are perfectly secured - poor fastenings may cause vibrations that will increase the possibility of breakage. Check and verify that nylon hoses are not in contact with oil or mineral grease or rubber solvents. Deeply press the brake pedal and verify that the pipes are not leaking. Check and verify that the pipe couplings are free from leakage, if any leakage is found, please thoroughly tighten the couplings. When tightening, handle with care to prevent abnormal twists of the pipes If there are any doubts on the above mentioned cases, change the parts. Additionally, it is recommended to replace the hoses after a certain mileage, or after a long period. This is to prevent the sudden break of the hoses because of aging and fatigue.
The sealing provision of the pneumatic system when the pressure is below the starting pressure with the engine still.	The inspection be carried out on the threaded coupling. Deliver air at a pressure of not less than 5 bar and apply quite thick soapsuds on the joints and couplings with a soft brush, then observe carefully for signs of leakage. The leakage is within tolerance if the diameter of the bubble is about 25 mm in 5 seconds, or the pressure drop volume in 10 minutes is about 2% of the pressure volume when stopping inflating (0.22 ± 0.02 bar).
The sealing provision of the pneumatic system when applying partial brake with pressure of 3 bar.	The pressure of the pneumatic system must remain stable for 3 minutes. This inspection should be carried out with the parking brake released.

	outer side of the	the flange surface; replace the faulty parts or grind the
	at the cylinder	inspection because the whole sealing ring seat is
	scraper ring	place with the TOP inscription turned towards the compressor cylinder head.
	The notches of the scraper rings and piston rings are on the same vertical line.	Correct installation with 120° stagger.
	Scored or ovalized cylinder	Grind the cylinder and mount a bigger piston
No compressing pressure	Deteriorated compression or intake valve	Change the faulty parts
	Deteriorated compression or intake valve	Mount the piston rings and stagger the notches 120° to each other
	Perforated piston or damaged piston elements	Change the entire piston
	Damaged gasket	Change the gaskets
	Energy-saving device set on open during inflating stage.	Replace the cylinder heads
Poor efficiency	Worn piston rings	Replace the piston (and piston rings)
	Air leakage between	Replace the gasket and

	cylinder and head	tighten the screws to the required torque
	Deteriorated energy saving unit, intake or compression valves	Change the faulty parts
	Excessive clearance between piston and cylinder	Grind the cylinder and mount a bigger piston
	Accumulation of the carbonized oil between the intake and compression valves	Clean the valves
Mechanical noises	Excessive clearance between the small end and pin, pin and piston hole, shaft and big end, shaft and bearing cover and between the flanges and shaft.	Check the tolerances of the relevant couplings
	Excessive clearance between piston and cylinder	Grind the cylinder and mount a bigger piston
	Excessive accumulated carbonized oil between the piston and cylinder head caused by oil combustion.	Clean the incrustations and replace the valves
Water leakage	Head gasket or contacting surfaces scored and uneven.	Change the faulty parts

A.P.U. (Air Processing Unit) selection and installation

Figure 37

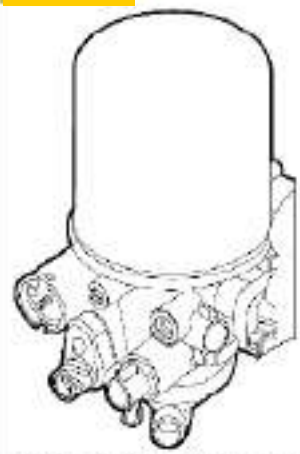

It is to keep the air clean and to maintain the right humidity in the distribution system and to keep the required operation pressure for the connected systems at the outlets.
This component integrates the functions of a 4-way pressure regulator, pressure reduction units for parking, service and trailer.

Brake general

Figure 38

Distribute the air in the tank to the braking elements. It can automatically restrict the pressures, i.e. it limits the air output pressure to a set maximum pressure and, as a result, it is possible to maintain a maximum constant braking pressure regardless of the pressure variations in the tank.
According to the correction of the brake control system (if existing), adjust the braking force of the front axle elements.

Figure 39

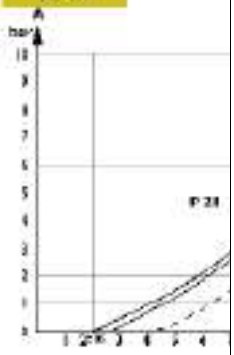

Characteristics chart

A = output pressure p21/p22 [bar]
B = Shoe travel [mm]

Diagnosis

Symptom	Possible cause	Resolution
Too much condensate in the circuit	Blocked filter cartridge	Replace the cartridge
The set pressure is not reached in the air reservoir	Air leaking from the safety valve	Overhaul the equipment and replace the worn components
	Worn sealing gaskets	Overhaul the equipment and replace the worn components
Air leakage at the drain hole	Piston sealing provision damaged	Overhaul the equipment and replace the worn components
Air leakage around the plug	Leakage from the valves in the four sections.	Overhaul the equipment, replace the worn parts.
Air leaks if one section is broken	Defective operation of the check valves.	Overhaul the equipment, replace the worn parts or the entire component if necessary.

Diagnosis

Symptom	Possible cause	Resolution
Air leakage	Air leakage from the	Overhaul the
		components
Irregular automatic pressure restriction of the distributor	The auto restricted pressure is higher or lower than the required pressure	Adjust the device through the corresponding screw
Vibrations when	Worn springs Air leakage from two	Overhaul the device and

braking	sections of the piston gasket	replace the faulty components Overhaul the device and replace the faulty components
Abnormal operation of the brake lamp control switch	The electrical circuit does not close The electric circuit does not disconnected	Replace the switch Replace the switch

Towing valve

Figure 41

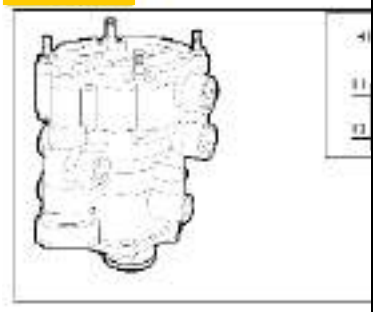

The unit, controlled by two independent circuits of the brake general valve and the tractor spring brake circuit, controls the brake of the trailer. It is also equipped with a control regulation device fitted on the lower external part.

The unit is used to brake the trailer with a malfunction in the control circuit, combined with another device.

Adjustment of control

The unit is equipped with a control regulation device.

Figure 43

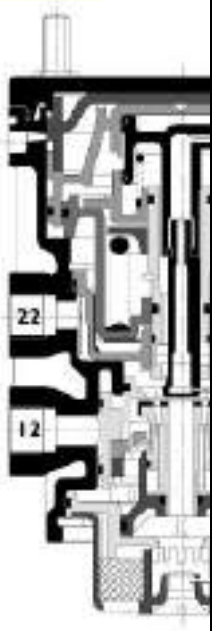

To execute the control adjustment of the towing valve, please follow the operation procedures hereunder:

- Remove screws (2) from the outlet silencer body.
- Fix a suite of screw wrenches into the hole passing through the silencer body and turn the body hexagon hole (1)
- Turn it clockwise to increase control.
- Turn it counterclockwise to decrease control.

Figure 44

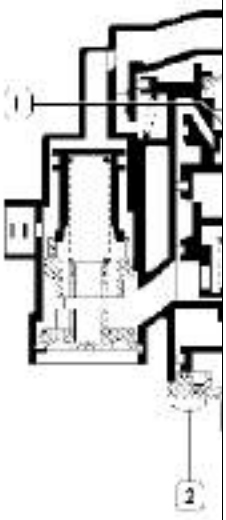

Carry out the control adjusting according to the following operation procedures:

- Remove screws (1) and then remove the cover (3).
- Turn the control adjusting screw (1).
- Turn it clockwise to decrease control.
- Turn it counterclockwise to increase control.

Diagnosis

Symptom	Possible cause	Resolution
Air leakage from the bleed hole when in still state	Leaking from the sealing gaskets. Faulty exhaust valve and valve seat.	Overhaul the unit and replace faulty components Overhaul the unit and replace faulty components
Outlet pressure different from the set values	Incorrect control valve Air leakage from the sealing gaskets Worn pistons and seats or malfunction Strained springs Incorrect control valve	Adjust the control Overhaul the unit and replace faulty components Overhaul the unit and replace faulty components Overhaul the unit and replace faulty components Carry out control adjustment.

Towing connector

Figure 45

The variable-pipe coupling head is covered with a yellow cap, while the automatic-piping coupling is covered with a red cap and a safety ridge (1). The application of the safety ridge prevents incorrect coupling.

7 ck valve (towing vehicle)

Figure 46

The compressed air should flow in the direction of the arrow marked on the housing; make sure to prevent reverse flow.

Parking hand brake valve (tractor)

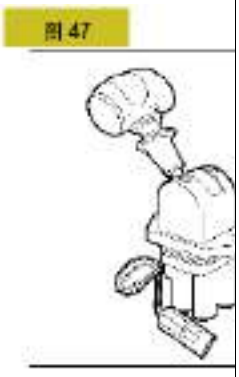

The device realizes emergency and parking brake of both the tractor and the trailer.
And it can also be used to check the brakes of the tractor. This operation must be carried out when the vehicle is parked on a steep road.

Diagnosis

Symptom	Possible cause	Resolution
Air escapes from the bleed of the control lever.		
In brake release position	Faulty exhaust, valve, corresponding seat or seal ring	Check and overhaul the unit, replace faulty component. Carefully clean the component.
In braking position	Worn control valve, seal rings and control valve elements	Check and overhaul the unit, replace faulty components. Carefully clean the components.
Difficult to operate the control lever	Internal component conflicts inside the distributor.	Internal component conflicts inside the distributor.

Figure 47

Parking hand brake valve

Figure 48

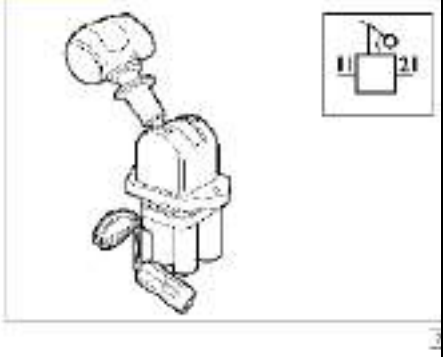

The unit, integrated in the tractor parking brake circuit, puts the emergency and parking brake into effect by discharging the air contained in the spring cylinder.

Diagnosis

Symptom	Possible cause	Resolution
Air leakage from the discharge with the brake lever in brake position	Worn piston, exhaust valve, seal rings	Clean carefully, verify that all the rubber components and the corresponding seats are in perfect condition. Overhaul the unit and replace faulty components
Air leakage from the discharge with the brake lever in emergency or parking brake position	Worn piston and corresponding seal ring	Clean carefully and check the components, overhaul the unit and replace faulty parts.
Air leakage from the cover of the brake lever	Worn plate, gaskets and seal rings	Clean the components carefully, check the seal ring and the gasket surfaces. Make sure that the rubber components and the corresponding seats are in perfect condition. Overhaul the unit and replace faulty or worn components, if necessary restore the contact surfaces.
Difficult to operate the brake lever	Internal components conflict inside the distributor.	Clean carefully and check all the components. Overhaul the unit and change the faulty components, when reinstalled in place, lubricate all the sliding positions with grease. If any malfunction or wear-out is found that may affect the normal operation of the system, replace the entire unit.

Relay valve

Figure 49

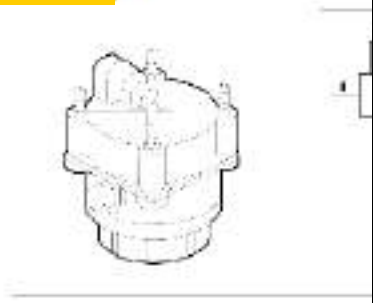

This unit can reduce the maintenance time of the front or rear axle brake system.

Diagnosis

Symptom	Possible cause	Resolution
Air leakage at exhaust with control pipe in discharging state	Leakage from the delivery position or from the seal rings	Overhaul the unit and replace faulty components
Air leakage at the outlet with control pipe in supply state	Leakage from the piston seal rings or from the exhaust valve	Overhaul the unit and replace the faulty parts

Figure 50

Engine discharging brake control valve

图 50

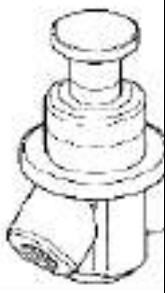

This is an automatic distributor that can be activated in the cab. It is built in the driver control module for the engine brake.

Figure 51

Engine discharging brake control valve

图 51

The unit delivers the pressure of compressed air to the mechanical braking device when the brake pedal is pressed. In case of failure, the complete cylinder has to be replaced (Drum brake shown in the figure).

Combined type brake chamber

Figure 52

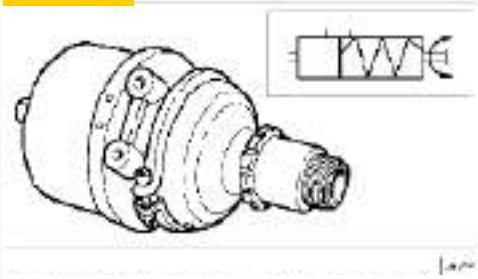

The unit is composed of two components: One with a diaphragm for the service brake and the other with a spring for the parking and emergency brake in the case of failure in the brake system.

Combined wheel cylinder emergency relief device

Figure 53

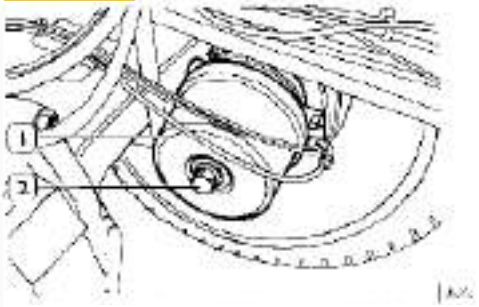

In case the air cannot act on the spring of the combined wheel cylinder (1), it is possible to manually release the brake to enable towing of the vehicle. To release the brake, loosen the screw (2) to the end of its stroke.

Maintenance operation

Figure 54

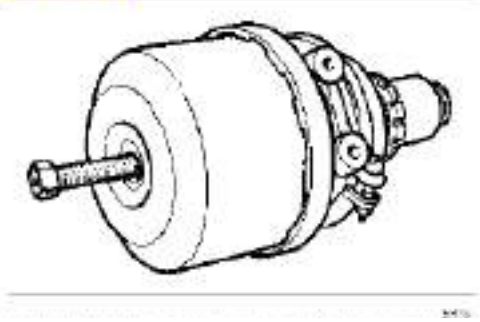

Before removing the combined wheel cylinder from the vehicle, manually release the brake of the combined wheel cylinder as described above.

It is recommended to carefully clean the mud or other contaminations from external parts of the cylinder as entry of these substances may damage the cylinder.
If the cylinder spring section fails, do not remove this part since this operation may cause personal injury to the operator.

Diagnosis

Symptom	Possible cause	Resolution
Air leakage at the exhaust or the spring collar.	Perforated or broken diaphragm. Broken diaphragm lip Loosen fastening screws of the spring collar.	Replace the diaphragm Tighten the screws
Air leakage at the diaphragm section	Strained spring components	Overhaul the unit and replace the worn components

Diagnosis

Symptom	Possible cause	Resolution
Air leakage at the outlet during brake phase	Gasket on the control piston Faulty exhaust valve or corresponding seat	Overhaul the unit and replace the worn components
Air leakage at the couplings	Not tightened to specified torque	Tighten the couplings to specified torque

ABS (Anti-Lock Brake System)

To brake and decelerate a running vehicle, the brake distance is determined above all by the friction force between the tires and road surface.

For a brake system functioning properly and sufficiently, a further improvement in braking can only be achieved by increasing the friction of the tires or grip of the road surface.

When in especially tricky road conditions, such as poor grip due to a wet or icy road surface, the driver must operate the brake with proper force to avoid the risk of slipping caused by locked wheel(s).

Therefore, the function of the ABS system is to ensure vehicle stability (in all braking conditions), preventing the wheels from locking regardless of the road surface conditions, thus making full use of the grip.

Even in case of emergency

Pressure sensor

Figure 55

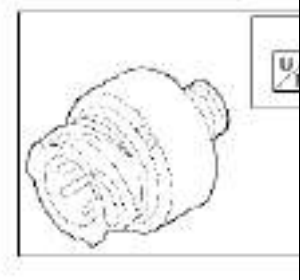

In ABS/EBL systems, its duty is to transmit the data of the driver's operation to the electronic control unit.
In EBS systems, this unit is integrated in the front axle, rear axle and trailer control valves.

braking, the system can maintain the driving direction following steering (avoidance of obstacles) without risk of slipping.

In a word, the anti-lock brake system (ABS):

- Prevents the wheels from being locked when the vehicle is braking, no matter what the road surface is.
- Shorten the brake distance.
- Guarantee the safety of the driver by maintaining the stability and direction of the vehicle.

ABS Electronic control unit

Figure 56

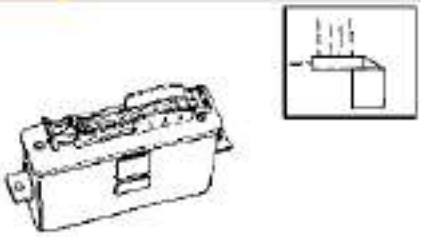

The electronic control unit acts as the brain of the system.
It controls the system solenoid valve according to the signals received from the wheel speed sensor.
Each channel features four functional circuits: The first is the input circuit that receives the analog signals from the sensor on the relevant wheel, debugged and converted to digital data through the cyclic square wave measurement. Meanwhile a main circuit with a microprocessor built-in is provided to process the information received from the input circuit.
The microprocessor contains a sophisticated program that enables it to determine the wheel acceleration and deceleration values and to make the logical combinations of the various adjustment signals. When necessary, it sends two command signals to the relevant anti-lock distributor through the third control circuit to properly adjust the braking pressure.
The fourth and also the last circuit is the safety circuit that inspects the efficiency of the various system components.
In the case of a failure, it not only informs the driver by lighting the relevant warning indicator on the instrument panel, but also automatically disconnects the entire ABS system, keeping the conventional brake system fully efficient.

Brake anti-lock distributing valve

Figure 57

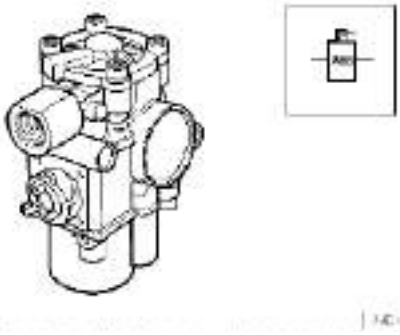

This component regulates the air pressure in the brake circuit. When the electronic control unit detects a wheel locking, the valve will cut off the wheel cylinder air supply, thus preventing the wheel from locking.

The device applies brakes to the driving wheels through the anti-lock regulator whenever it detects slipping of one or more

Braking stage

When braking, the diaphragm brake chamber push rod presses down on the lever (30).
The force is transferred to the axle (15) with the bearing off the central position (31)
Through the threaded sleeves (2) and pistons (3), the force is transferred to the inner brake linings (28).
Once the clearance between the brake linings (28) and brake disc (29) has been restored, the force is transferred to the outer brake linings (28) due to the movement of he brake caliper.
The braking force is therefore produced when the brake linings (28) are pressed on the brake disc (29) .

Releasing stage

As soon as the brake pressure decreases, the pressure spring (17) and rear axle (15) return to their original positions along the threaded sleeves (2) with the lever (32).

Automatic clearance recovery

The brake is equipped with an automatic adjustment device, which maintains regular working clearance between the brake linings and brake disc.
Every time the brake operation is applied, the adjustment device (21), which is integrated into the lever (32), will start up automatically. If the working clearance between the worn brake linings and brake discs increases, the adjustment device (21) and drag link (13) will turn the threaded sleeves (2) to recover the said increase in clearance.
The working clearance should be between 0.6 and 1.1 mm; too small clearances might cause overheating problems.

Inspection

Check the efficiency of the automatic recovery system.

Figure 61

the wheel.
are transmitted to the electronic control unit for processing. Each wheel has a sensor and a sound wheel installed on it. This enables individual adjustment of the braking pressure for each wheel, thus optimizing the driving stability and brake distance.

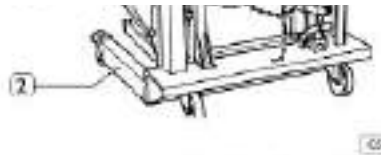

Remove the lock nuts and wheels by the hydraulic stand 99321024 (1).

Figure 62

Remove the plug (4) by a protruding (3) and make su
(2) is not loose

Note: Never turn the adjusting pinion (1) with adapter (2) first. If it exceeds the cutting adapter, the adapter may be damaged.
Try again with a new adapter and if it g once again, there is an internal malfunctio caliper and it has to be replaced.

Figure 63

Install the adapter (2, Figure 62) to the adjustme suitable wrench (1) and rotate it counterclockwise increase the clearance between brake linings and br

Operate the brakes about 5-10 times and make su (1) moves clockwise with small increments until between the brake linings and brake disc is fully rec

If not, i.e. the wrench can't turn, turns only once o directions, this indicates the automatic clearance re has malfunctioned. Replace the brake caliper an wheel onto the vehicle by the following procedures:

Brake

Figure 102

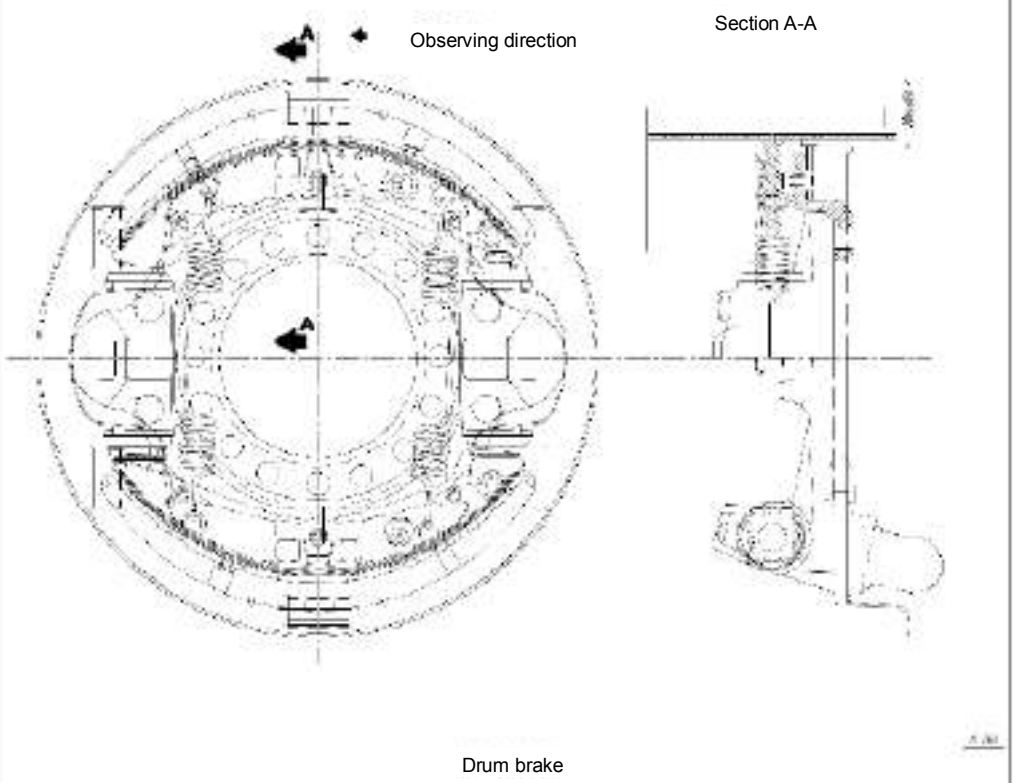

Drum brake

Brake

Overhaul the brake ASSY of the rear brake.

Disassembly

Figure 103

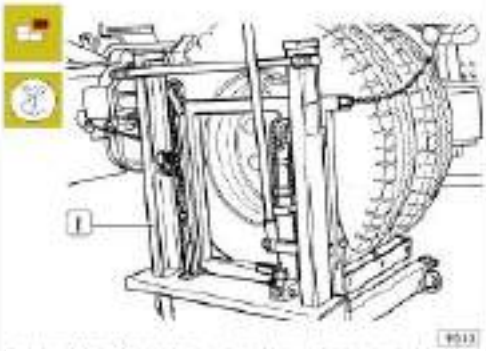

Stop the vehicle on level ground. Take off the cover, loosen and remove the nuts used to fix the wheels.
Lift the vehicle of the working side and support it on special stands.
Position the hydraulic trolley 99321024 under the wheels.
Take off the nuts fixing the wheel.

Figure 104

Fully unscrew the hand brake screw (2) of the combined wheel cylinder (1).

Figure 108

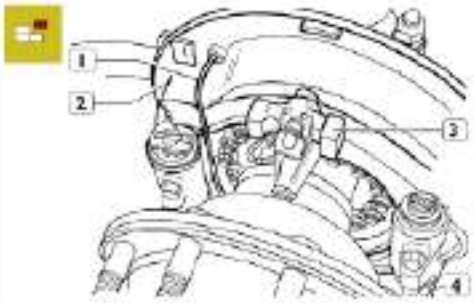

Take out the screws fixing the brake drum (1) to the wheel hub (2)
Disconnect the brake wear indicator cable (1) from the clips of the brake plate (3) and take the cable out of the guard (2).
Remove the lower shoe (4).

Figure 109

Figure 106

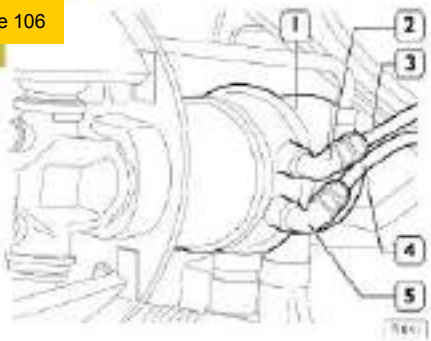

Disconnect the pipes (3 and 4) from the tube joint (5 and 2) and remove these parts from the combined wheel cylinder (1). Loosen the fixing ring nut with wrench 99356006, turn the combined wheel cylinder (1) counterclockwise and remove it from the brake body.

Figure 110

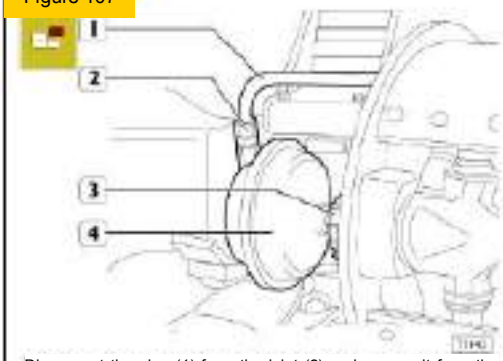

Disconnect the pipe (1) from the joint (2) and remove it from the diaphragm wheel cylinder (4). Loosen the ring nut (3) with 99366006.
Turn the diaphragm wheel cylinder (4) counterclockwise and remove it from the brake body.

Figure 111

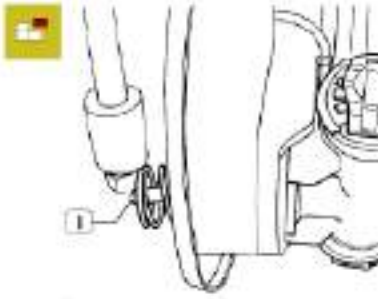

Extract the wedge-shaped control unit (1) from the b

Figure 112

Unscrew the guide pin (2) and take it out. Extract unit (1) together with the thrust pin from the brake bo

Figure 113

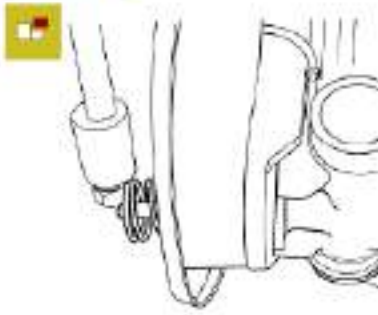

Unscrew the guide pin (2) and take it out.
Extract the reaction pin (1) together with the thrus brake body (3).

Figure 114

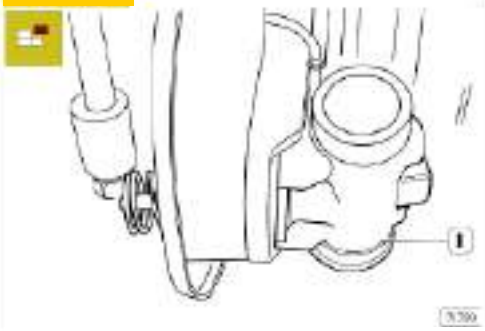

Check the wear condition of the pin seats on the brake body (1), if scored or excessively worn, replace the abnormal brake parts.
Examine the wear of the drums to decide if they can be reused.
Measure the diameter of the drums with a vernier gauge without adjusting the angle of the arm lever.
Measure the diameter at several points to inspect the roundness and wear; also take into consideration the depth of the scoring on the braking surface.
Permissible tolerance on roundness and/or eccentricity is 0.25mm.
If any wear or scorings are found and the braking surface can't be restored by turning, or clear signs of overheating, replace the drum (refer to Specifications and data table).
Check the conditions of the brake shoes and replace them if cracked.
If the brake surface of the lining shows signs of grease, the causes must be found and eliminated.
The minimum permissible thickness of the brake linings is 6.95 mm. If the thickness is found lower or only slightly bigger than this value, replace.
Check the wholeness and/or efficiency of the brake lining wear signal cable.
Check the wholeness and/or efficiency of the shoe return springs.

Figure 115

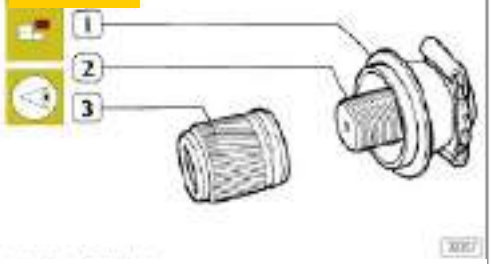

Disassemble the automatic adjustment unit.
Unscrew the adjustment bushing (3) from the adjustment pins (2) and then remove the seals (1).
Check the wear condition of the outer helical toothing of the adjustment bush and check whether the bushing is sliding freely on the relevant adjustment pins when screwed tight.

Figure 116

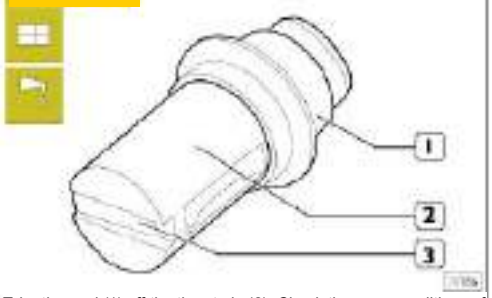

Take the seal (1) off the thrust pin (2). Check the wear conditions of the thrust pin (2), sloping surfaces (3) and the influence caused by the operation of rollers driven by shoe opening.

Figure 117

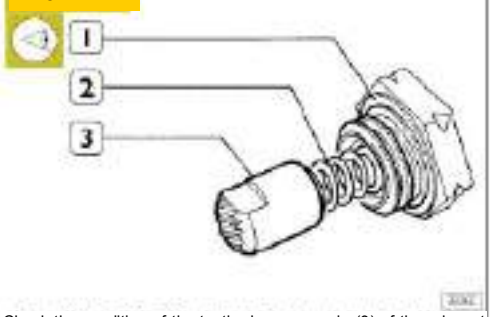

Check the condition of the toothed pressure pin (3) of the relevant compression springs (2) and the copper washers (1).

Figure 118

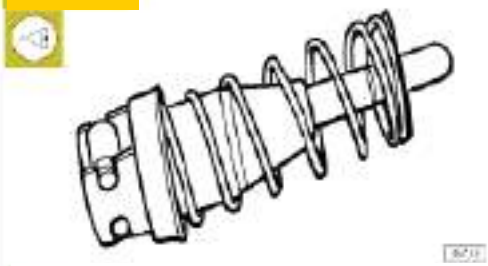

Check that the wedge units slide easily and without wear.

If wear is found on the wedge components, the complete unit must be replaced.

Brake drum turning

Measure the drum diameters by a gauge without bending the arms; measure the diameter in several points to make sure of ovality or wear.

Figure 119

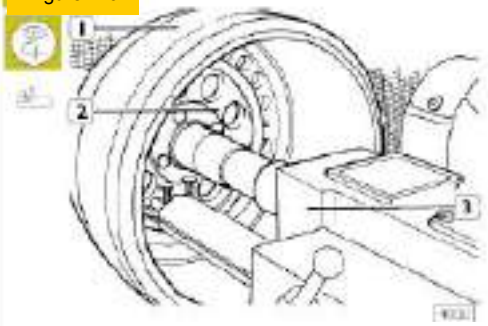

Fit tool 99372213 (2) inside the brake drum.
Fit this combined unit onto the lathe shaft 99301001 (3).
A set of spacers is fixed on the shaft to eliminate the end play of the units, tighten the lock nuts and place on the lathe support.
Fit the anti-vibration band on the brake drum.
Turn the drums sharply, rectifying the imperfections by turning enough material.
After turning, remove the drum brake and carefully clean it.

The permissible maximum diametric oversizing of the drum is indicated on the drum.
This limit can under no circumstances be exceeded as it may affect the braking effect and the drum resistance characteristics.

Choose suitable brake lining pairs for each drum according to the oversizing.
Linings of the same type are to be installed on each axle.

Replacing the brake linings

Figure 120

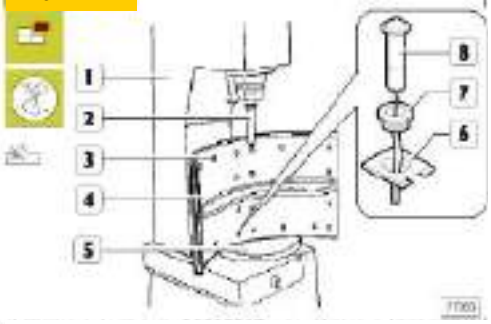

Remove the worn brake linings from the shoes with compressed air press 99305087 (1).

Note: From the lower shoes open the clip tabs (6) and release the bushing (7). Now remove the lining wear sensor (8) and associated cable.

Set the complete shoes (4) on an adjustable stand (5).
Shear the rivet heads (3) with a chisel (2) of the press tooling tip (1).
Take out the rivets from the shoes.
Carefully wash and blow clean the surface of the shoes.

Figure 121

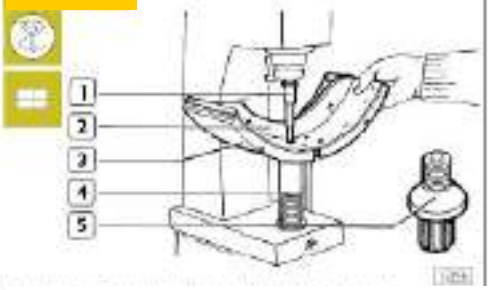

Place the contact pin (5) on the press moving support (4).
Rivet the brake linings (3) onto the shoes (2) with the beater (1) of the press tooling tip.

Note: To rivet the brake linings correctly, start from the center and gradually extend to the braking section.

Mount the seal wear cable by reversing the procedures of disassembly.

Turning the brake linings

Figure 122

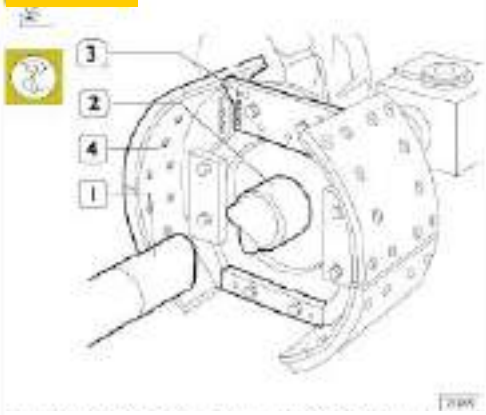

Mount the hub 99372228 (2) onto the shaft of the lathe 99301001 (1).
Mount the plate 99372230 (3) on the hub (2) and secure the brake linings (4), making the wording align as shown in the figure. Turn the brake linings.

Assembly

Figure 123

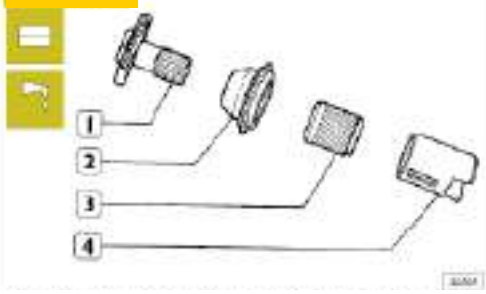

Mount the seals (2) onto the units of the adjustment pins (1). Apply grease to the thread of the pins (1).
Fully screw into the adjustment bushings (3) and apply grease thoroughly on the outside diameter.
Lubricate the inner diameter of the thrust pins (4) with grease.

Figure 124

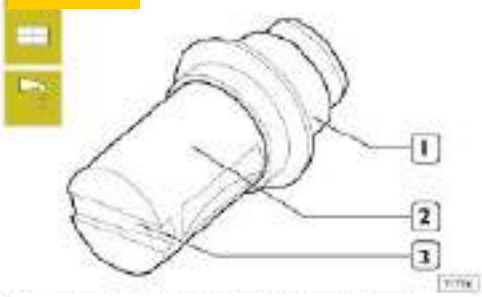

Apply grease to the seal (1) and fit it on the thrust pin (2).

When repairing the brakes, replace the seal provisions of the reaction and thrust pins.
Use grease to lubricate the components.

Figure 125

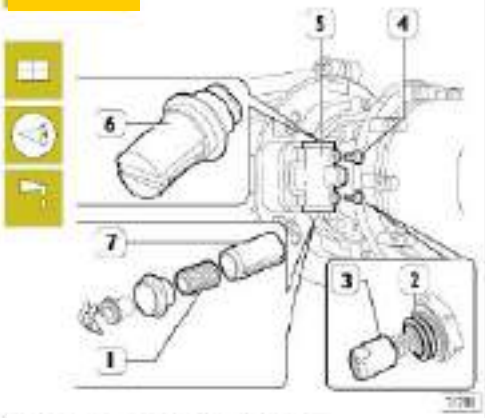

Lubricate the internal brake body (5) with grease.
Mount the seal assembly (6) of the thrust pin with the slot facing the guiding pin (4).
Insert the thrust pin (7) into the brake body (5) and insert the adjustment pin, seals and adjustment bushing assembly (1).

Take great care to follow the assembly order of the pins as illustrated in Figure 123.

Lubricate the guide pin assembly (4) with grease and insert it into the seat on the brake body (5). Check that the washer (2) is inserted and screw in a few turns.

Note: The guide pins (4) should be mounted so that the tips (3) can slide in the seats of the holes in the brake body (5).

Figure 126

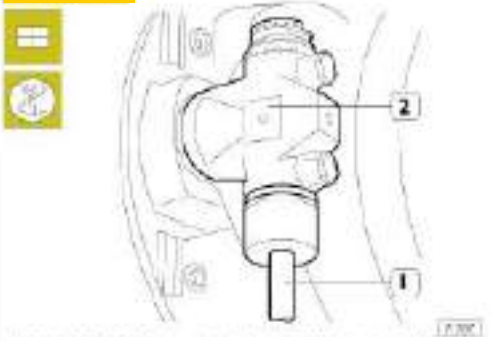

Using the key 99373002 (1), drive the metal rings of the seats into the brake assembly (2).

Figure 127

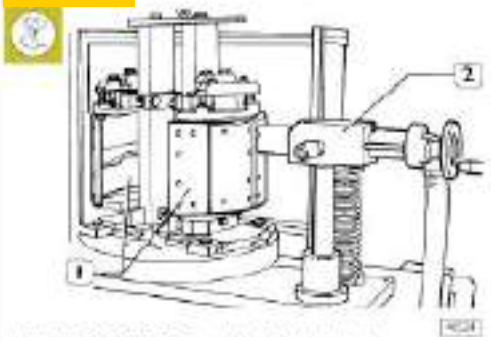

Turn the brake linings (1) using device 99301006 (2).

Figure 128

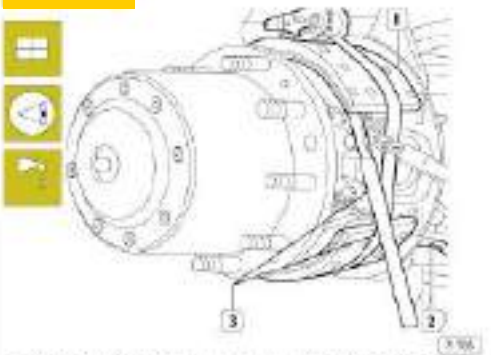

Connect the lining wear indicator cable electrical connection (2) to help fix the nuts onto the shoe. Mount the shoe (1) on the seat. Hook the shoe return springs with the aid of tool 99372211 (3).

Figure 129

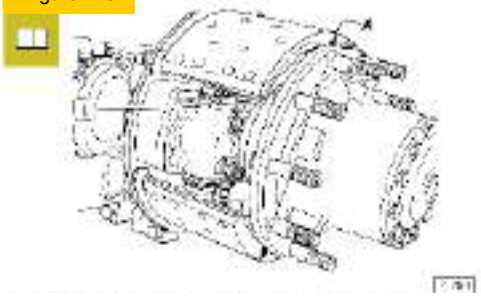

Unscrew the adjustment unit (1) until the diameter reaches A, 2 mm smaller than the mounting diameter of the brake drum.

Figure 130

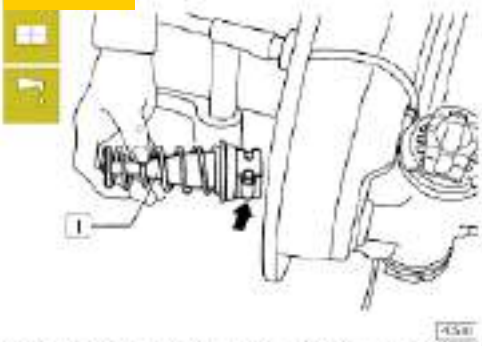

Lubricate the wedge-shaped control unit (1) with grease. Insert it into its seat, taking care that the rollers (⇒) are correctly positioned in the sliding race.

Figure 131

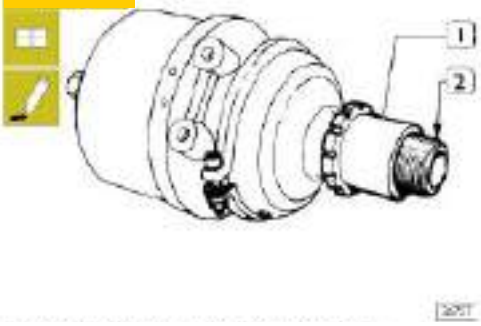

Push the ring nut (1) by hand into the sleeve (2) as far as it will go. Apply non-hardened sealant type LOCTITE 573 on the first few threads of the sleeve (2).

Figure 132

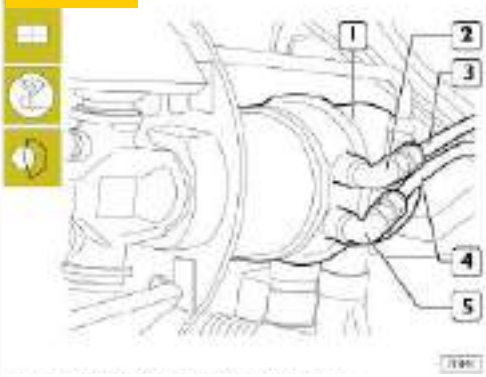

Screw the combined wheel cylinder (1) fully into its seat.
Check that the hole on the joint of the supply pipe is in the same position when removing; if not, loosen the combined wheel cylinder appropriately. Mount the pipe joints (2 and 5) and connect to the supply pipes (3 and 4). Supply air to the diaphragm sections of the combined wheel cylinder by applying service brakes. Tighten the ring nut to the required torque with wrench 99356006. Connect electrical connection for the brake lining wear indicator cable. Fully screw the screws (2, Figure 131) to restore the operation of the combined wheel cylinder (1).

Figure 133

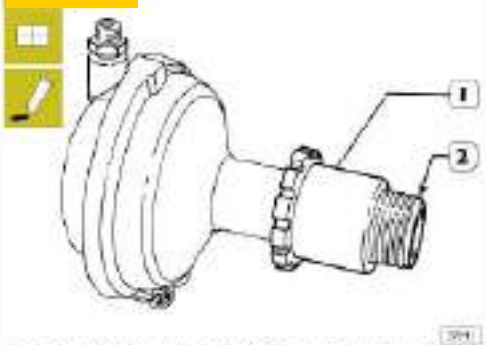

Push the ring nut (1) by hand into the sleeve (2) as far as it will go.
Apply sealer LOCTITE type 573 on the first three threads of the pipe (2).

Figure 134

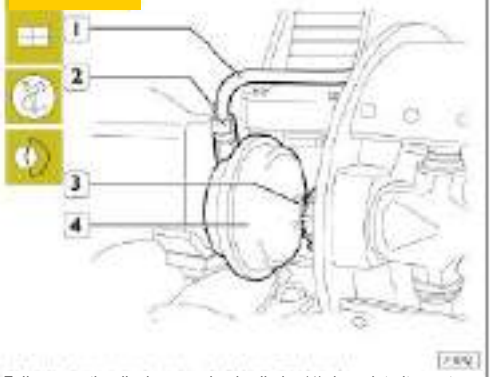

Fully screw the diaphragm wheel cylinder (4) down into its seat.
Check that the hole on the joint of the supply pipe is in the same position as when removing it; if not, loosen the diaphragm wheel cylinder (4) appropriately. Mount the pipe joint (2) to the diaphragm wheel cylinder (4) and connect to the supply pipe (1).
Supply air to the wheel cylinder by applying service brakes, tighten the ring nut (3) to the required torque with wrench 99356006.

Figure 135

Assemble the wheels and tighten the fixing nuts to the required torque according to the diagram shown in the figure.
Mount the brake assembly on the opposite side.
Start the vehicle's engine and run for a sufficient amount of time until the air system is filled.
When the vehicle is running, apply brakes several times to break-in the brake ASSY and check the clearance recovery between the brake linings and brake drum.

SECTION 12

2800 Chassis

PAGE

2800 Chassis

Dimensions

Width:	F:965 – R:780
Height:	280 mm

Tightening torque

Figure 219

SEMITRAILER FIFTH WHEEL MOUNTING SCHEME

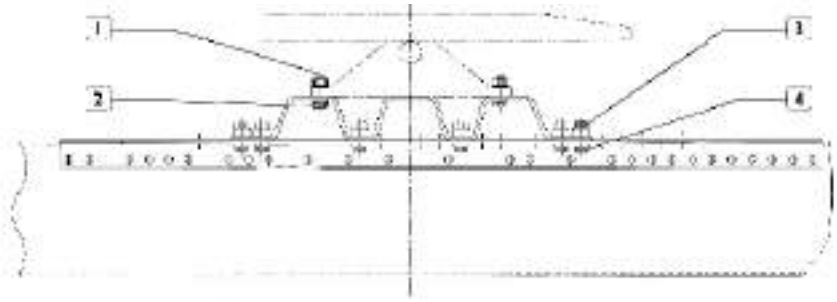

Figure 220

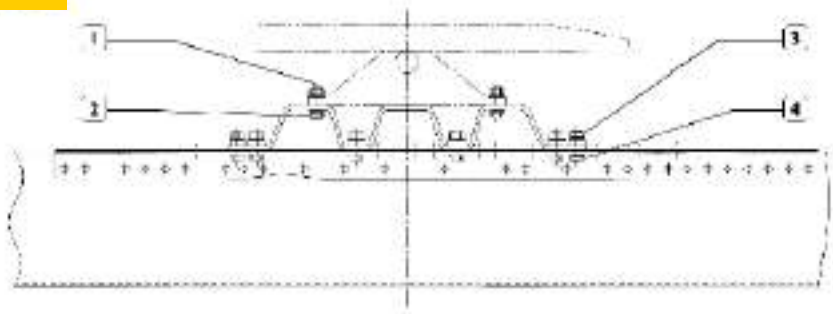

SEMITRAILER & FIFTH WHEEL MOUNTING SCHEME

Description	Torque	
	Nm	Kgm
Screw with M16x1.5 flanged nut securing fifth wheel to chassis or plate	238 ± 26	23.8 ± 2.6
Screw with M16x1.5 flanged nut securing fifth wheel to chassis or plate	310.5 ± 33.5	31 ± 3.3
Nut with M16x1.5 flange securing plate to chassis	310.5 ± 33.5	31 ± 3.3
Screw with M16x1.5 flange securing plate to chassis	238 ± 26	23.8 ± 2.6

Repairs
Checking

Inspect the chassis frame, check its deformation.
Even at this stage, if you detect any deformation, you need to free the relevant part of the chassis frame to help make an exact measurement.
Before the test you need to check all the parts that affect the exact measurements (for example, tire pressure, weak or broken leaf springs, etc.).

Figure 221

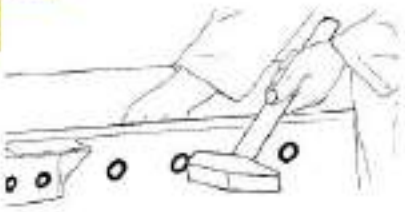

Check the rivets: Strike their heads with a mallet and touch the opposite side with your fingers.
Mark any loose rivets with paint to help identify them during repair.

Figure 222

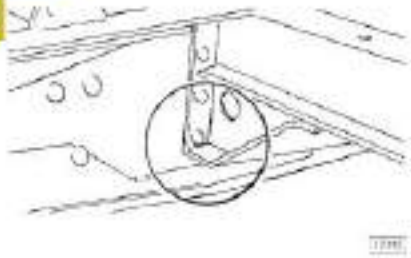

Carefully check for any peeling or cracking on the chassis frame, paying special attention to joints under great strain, such as: chassis frame cross members, brackets, mounts of leaf springs and chassis frame structural members.
Mark any peeled or cracked points straight away.

Figure 223

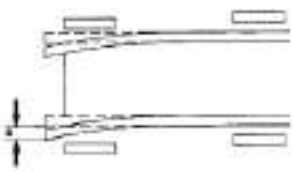

Permissible camber of chassis frame
'a' = 3 mm/m.

Figure 224

Permissible camber of chassis frame
'b' = 1 mm/m.
Maximum 10 mm.

Figure 225

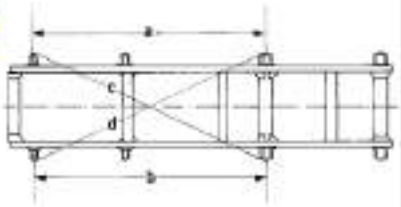

Permissible difference between 'a' and 'b' = 3 mm.
Permissible diagonal difference between 'c' and 'd' = 6 mm.

Measuring the camber of the chassis frame downwards or upwards

Figure 226

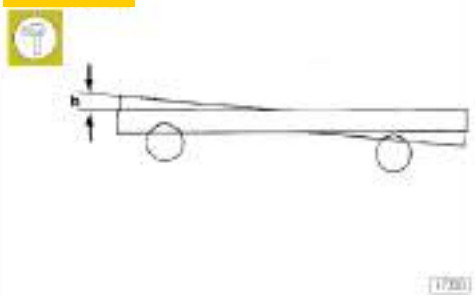

Permissible torsion on the chassis frame

'b' = 1 mm each side.

Measuring the side camber of the chassis frame

Figure 227

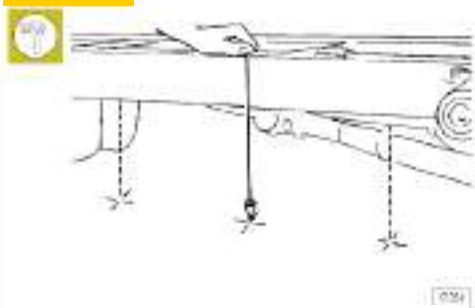

To measure the side camber of the chassis frame you need to plumb the supporting surfaces starting with the two structural members at an interval of approximately 1m.
The points obtained in this way need to be marked accurately on the floor.

Figure 228

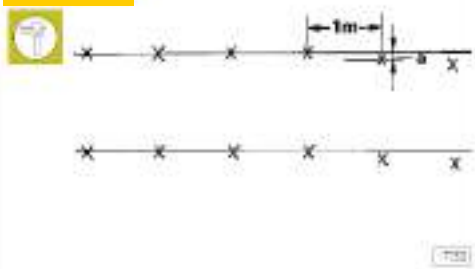

To use the plumbing method, you need to align the marked points in a straight line.
The points outside the line indicate the start position and extent of the actual deformation (a).

Figure 229

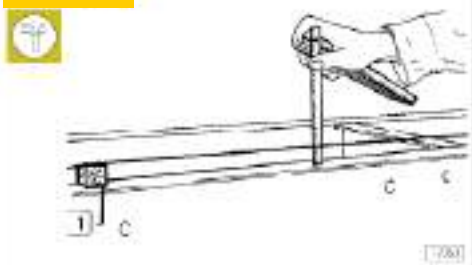

Take two shims (1) of such a size that a string can be stretched along the full length from the straight portion of the bottom or top waist on the structural member of the chassis frame. Measure the distance of the structural member from the string at 1-meter intervals. A different string distance indicates the position and extent of an actual camber in the structural member.

Measuring the displacement of the chassis frame

Figure 230

A displacement of the chassis frame can be measured by means of a set square.
To do this, place the set square at 90° to the structural member of the chassis frame and check the squareness of the cross members of the chassis frame.

Figure 231

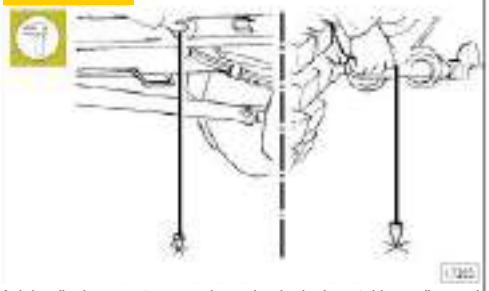

Axial displacement can be checked by taking diagonal measurements. To do this, plumb the center of the front mount of the front suspension and the center of the front support of the rear leaf spring on a flat supporting surface on both sides.

Figure 232

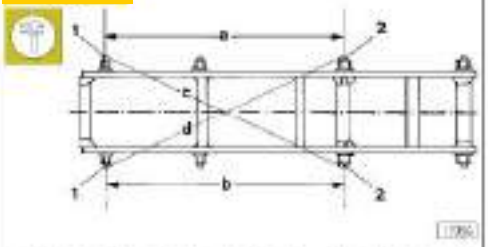

First compare the distance of the points A and B, then perform the diagonal measurements from the right front point (2) to the left rear point; then from the left front point (2) to the right rear point to get the distances C and D.

Measuring the torsion of the chassis frame

Figure 233

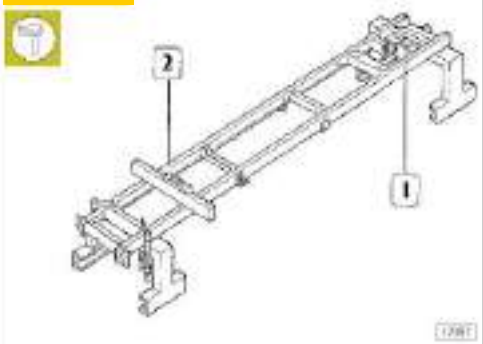

A slight torsion can only be measured after the chassis frame has been separated from the cab and mechanical assemblies.
To do this, proceed as follows:

- ⑥ Set the chassis frame on two stands.
- ⑥ Using two clamps, secure one side of the chassis frame to the stand.
- ⑥ Position the central position under the rear cross member of the chassis frame on the other side at the knee of an L-shaped iron (1).
- ⑥ Set a ruler crosswise and put a spirit level (2) on this and checking the reading.

At the check points, you should get the same readings, otherwise the chassis frame not properly shaped.

Precautions

Figure 234

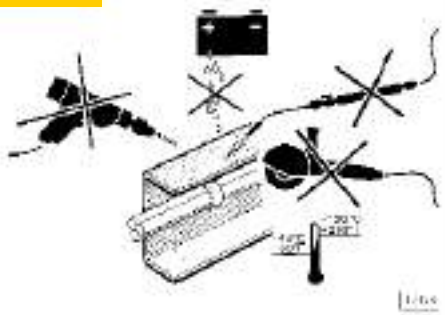

When the welding, drilling, grinding and cutting near brake system piping - especially piping made of plastic - and electric cables, take the appropriate precautions to protect them or move them aside if necessary. All the parts of the chassis frame subject to reconditioning will need to be protected against oxidation and corrosion.
This protection and painting will need to be done carefully on all parts concerned, as per any relevant instructions, methods and precautions of the paint manufacturers.

Figure 235

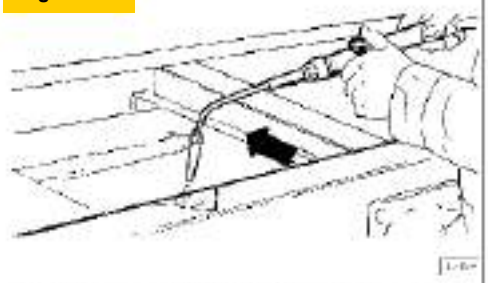

When repairing the chassis frame, use a gas welding torch to perform wedge heating to the relevant parts. During this operation, the metal needs to turn cherry red, which corresponds to a temperature of 600 – 680 ºC.
The heated parts must undergo no further heating.
Let the treated parts cool slowly without using any water, compressed air or the like.

Figure 236

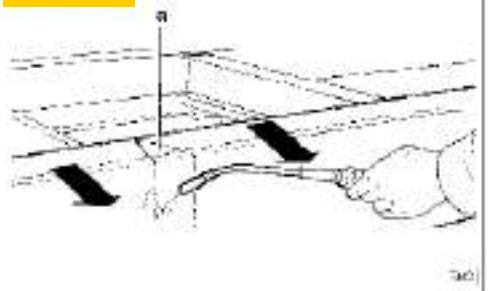

Straighten the side bend of the chassis frame with wedge heating on the top and bottom waist of the relevant part on the chassis frame.
The tip of the heating wedge has to lie in the direction of the required bend.

If the base (a, Figure 44) of the two heating wedges is on the top plate of the structural member, then the plate also needs to be heated, but last.

Figure 237

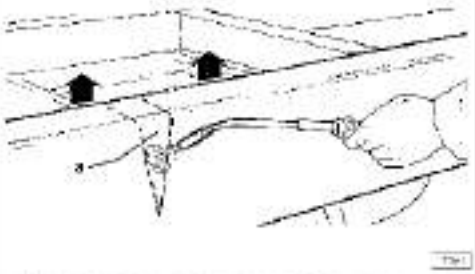

Straighten the sag in the chassis frame downwards or upwards with wedge heating on the top plate of the structural member. In the case of downward bending, the base (a) of the heating wedge is at the bottom. In the case of upward bending, do the opposite. The relevant bottom or top waist of the structural member has to be heated last in the area of the base of the heating wedge.

Welds on the chassis frame

Figure 238

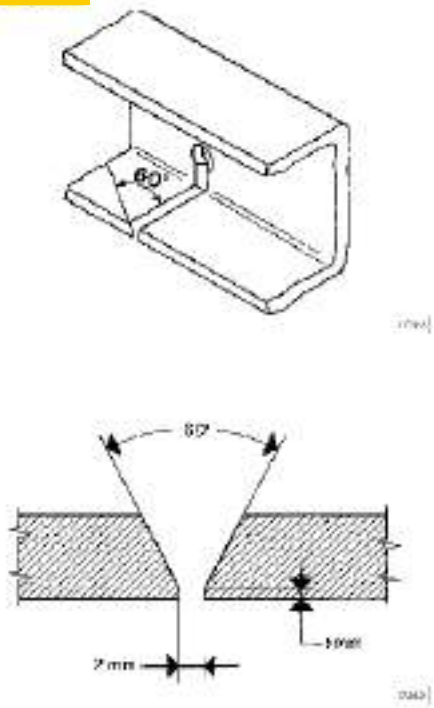

Before starting work, disconnect the negative battery terminal and connect the ground wire of the welding machine straight onto the piece to weld. Plastic pipes will need to be protected or removed. Welds must be made solely by skilled, trained personnel, with suitable equipment and in a workmanlike fashion.
Strip and deoxidize the parts to weld. At the point of breakage, on the inside of the structural member and along the full length of the relevant section, make a V bevel of 60º.

No cuts are permitted on the structural members at areas of changes in profile or at points with a high concentration of stress; additionally, do not insert the line of separation through the holes already in the structural member.

Figure 239

2800 Chassis

PAGE

Here we give the operations for proper welding:

a) Heat all around the area to be welded (except for QST E 420 material). Do the arc welding with several passes, using thoroughly dried basic electrodes, or perform the MIG-MAG welding procedures with suitable filler material. Do not overcharge. There should not have sharp edges or dross after welding.

b) Perform back welding as specified in point (a).

c) Leave the structural members to cool slowly and evenly. It is not permissible to use jets of air or other means.

d) Grind off the excess material.

e) Apply steel corner strengthening, with the same specifications as the steel used in the chassis frame. The approximate minimum dimensions are given in the above illustrations. They are to be fixed solely on the vertical rib of the structural member and it is possible to use bead welding, dummy spots, screws or rivets. The cross section and length of the weld bead, the number and distribution of the dummy spots, screws or rivets must be suited to transmit the bending and cutting of the section. On completing the work, the part involved in welding must be effectively protected with rust proofing.

2800 Chassis

Dimensions

Width:	F:965 – R:780
Height:	280 mm

Tightening torque

Figure 219

SEMITRAILER FIFTH WHEEL MOUNTING SCHEME

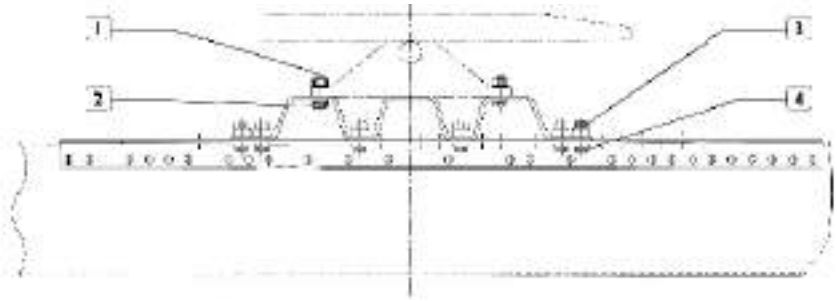

Figure 220

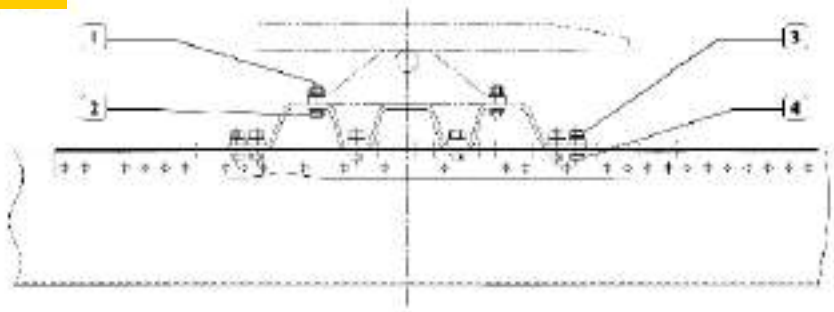

SEMITRAILER & FIFTH WHEEL MOUNTING SCHEME

Description	Torque	
	Nm	Kgm
Screw with M16x1.5 flanged nut securing fifth wheel to chassis or plate	238 ± 26	23.8 ± 2.6
Screw with M16x1.5 flanged nut securing fifth wheel to chassis or plate	310.5 ± 33.5	31 ± 3.3
Nut with M16x1.5 flange securing plate to chassis	310.5 ± 33.5	31 ± 3.3
Screw with M16x1.5 flange securing plate to chassis	238 ± 26	23.8 ± 2.6

Repairs
Checking

Inspect the chassis frame, check its deformation.
Even at this stage, if you detect any deformation, you need to free the relevant part of the chassis frame to help make an exact measurement.
Before the test you need to check all the parts that affect the exact measurements (for example, tire pressure, weak or broken leaf springs, etc.).

Figure 221

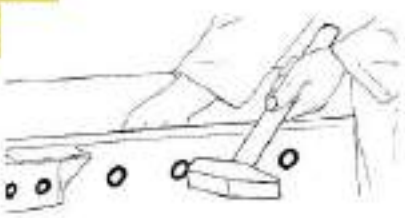

Check the rivets: Strike their heads with a mallet and touch the opposite side with your fingers.
Mark any loose rivets with paint to help identify them during repair.

Figure 222

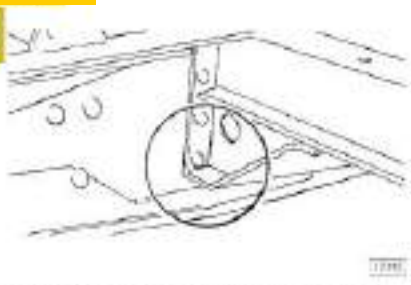

Carefully check for any peeling or cracking on the chassis frame, paying special attention to joints under great strain, such as: chassis frame cross members, brackets, mounts of leaf springs and chassis frame structural members.
Mark any peeled or cracked points straight away.

Figure 223

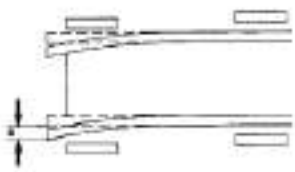

Permissible camber of chassis frame
'a' = 3 mm/m.

Figure 224

Permissible camber of chassis frame
'b' = 1 mm/m.
Maximum 10 mm.

Figure 225

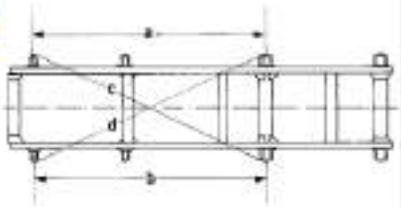

Permissible difference between 'a' and 'b' = 3 mm.
Permissible diagonal difference between 'c' and 'd' = 6 mm.

Measuring the camber of the chassis frame downwards or upwards

Figure 226

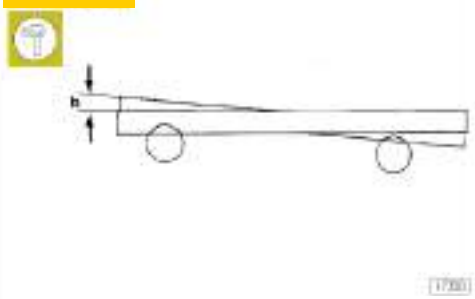

Permissible torsion on the chassis frame

'b' = 1 mm each side.

Measuring the side camber of the chassis frame

Figure 227

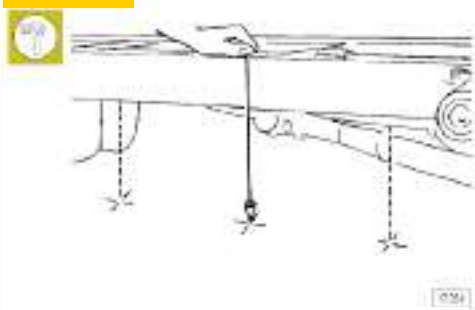

To measure the side camber of the chassis frame you need to plumb the supporting surfaces starting with the two structural members at an interval of approximately 1m.
The points obtained in this way need to be marked accurately on the floor.

Figure 228

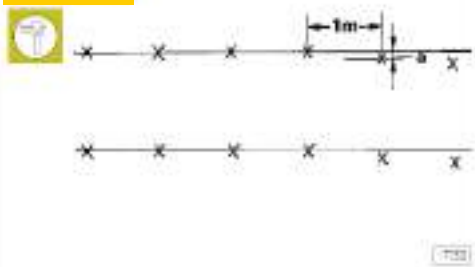

To use the plumbing method, you need to align the marked points in a straight line.
The points outside the line indicate the start position and extent of the actual deformation (a).

Figure 229

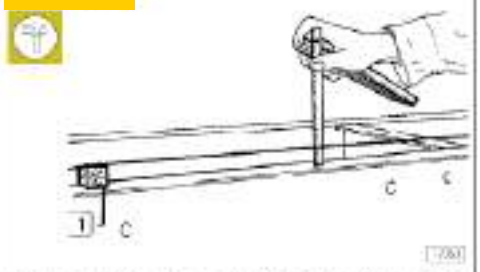

Take two shims (1) of such a size that a string can be stretched along the full length from the straight portion of the bottom or top waist on the structural member of the chassis frame. Measure the distance of the structural member from the string at 1-meter intervals. A different string distance indicates the position and extent of an actual camber in the structural member.

Measuring the displacement of the chassis frame

Figure 230

A displacement of the chassis frame can be measured by means of a set square.
To do this, place the set square at 90° to the structural member of the chassis frame and check the squareness of the cross members of the chassis frame.

Figure 231

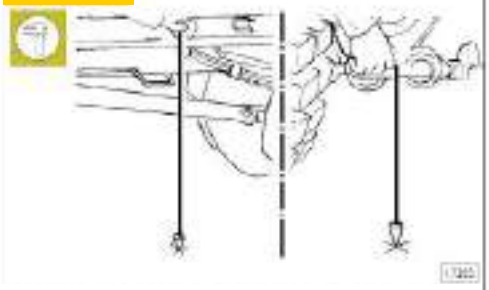

Axial displacement can be checked by taking diagonal measurements. To do this, plumb the center of the front mount of the front suspension and the center of the front support of the rear leaf spring on a flat supporting surface on both sides.

Figure 232

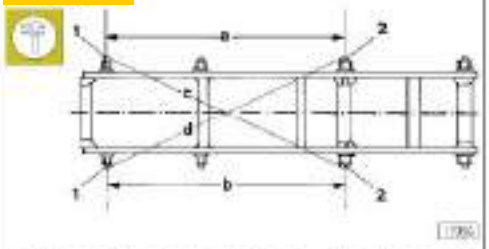

First compare the distance of the points A and B, then perform the diagonal measurements from the right front point (2) to the left rear point; then from the left front point (2) to the right rear point to get the distances C and D.

Measuring the torsion of the chassis frame

Figure 233

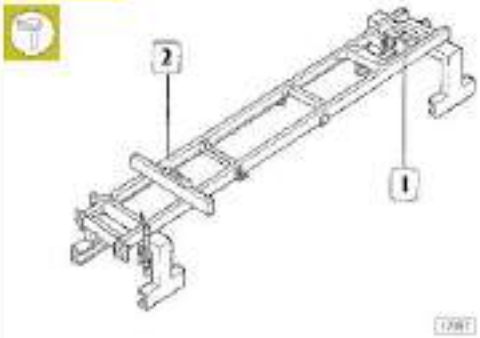

A slight torsion can only be measured after the chassis frame has been separated from the cab and mechanical assemblies.
To do this, proceed as follows:

- Set the chassis frame on two stands.
- Using two clamps, secure one side of the chassis frame to the stand.
- Position the central position under the rear cross member of the chassis frame on the other side at the knee of an L-shaped iron (1).
- Set a ruler crosswise and put a spirit level (2) on this and checking the reading.

At the check points, you should get the same readings, otherwise the chassis frame not properly shaped.

Precautions

Figure 234

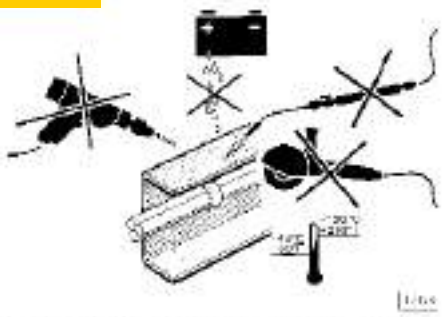

When the welding, drilling, grinding and cutting near brake system piping - especially piping made of plastic - and electric cables, take the appropriate precautions to protect them or move them aside if necessary. All the parts of the chassis frame subject to reconditioning will need to be protected against oxidation and corrosion.
This protection and painting will need to be done carefully on all parts concerned, as per any relevant instructions, methods and precautions of the paint manufacturers.

Figure 235

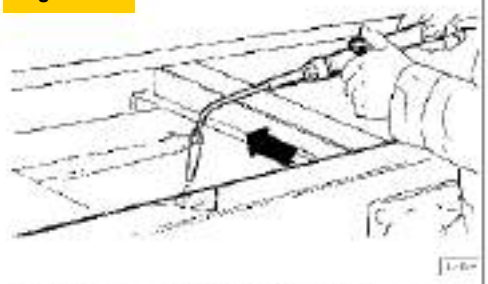

When repairing the chassis frame, use a gas welding torch to perform wedge heating to the relevant parts. During this operation, the metal needs to turn cherry red, which corresponds to a temperature of 600 – 680 ºC.
The heated parts must undergo no further heating.
Let the treated parts cool slowly without using any water, compressed air or the like.

Figure 236

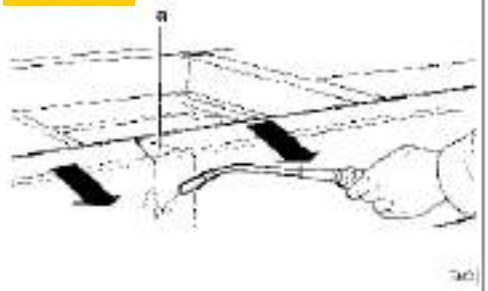

Straighten the side bend of the chassis frame with wedge heating on the top and bottom waist of the relevant part on the chassis frame.
The tip of the heating wedge has to lie in the direction of the required bend.

If the base (a, Figure 44) of the two heating wedges is on the top plate of the structural member, then the plate also needs to be heated, but last.

Figure 237

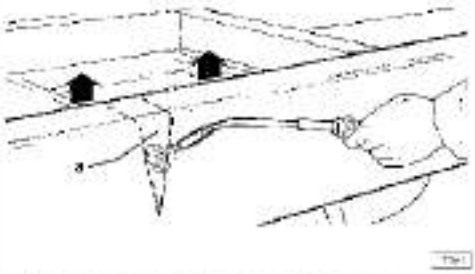

Straighten the sag in the chassis frame downwards or upwards with wedge heating on the top plate of the structural member. In the case of downward bending, the base (a) of the heating wedge is at the bottom. In the case of upward bending, do the opposite. The relevant bottom or top waist of the structural member has to be heated last in the area of the base of the heating wedge.

Welds on the chassis frame

Figure 238

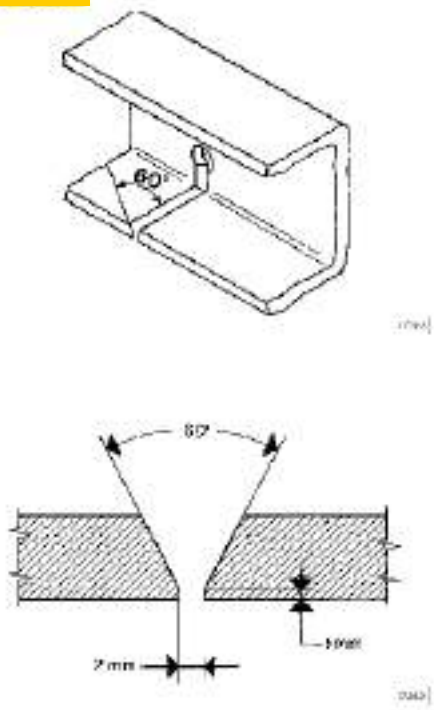

Before starting work, disconnect the negative battery terminal and connect the ground wire of the welding machine straight onto the piece to weld. Plastic pipes will need to be protected or removed. Welds must be made solely by skilled, trained personnel, with suitable equipment and in a workmanlike fashion.
Strip and deoxidize the parts to weld. At the point of breakage, on the inside of the structural member and along the full length of the relevant section, make a V bevel of 60º.

No cuts are permitted on the structural members at areas of changes in profile or at points with a high concentration of stress; additionally, do not insert the line of separation through the holes already in the structural member.

Figure 239

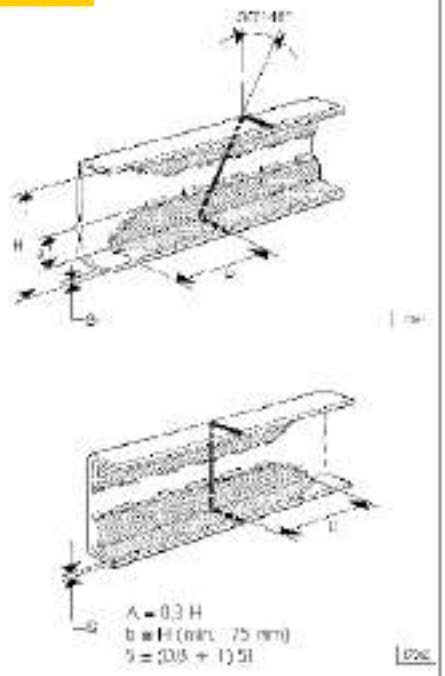

Here we give the operations for proper welding:

~~a)~~f) Heat all around the area to be welded (except for QST E 420 material). Do the arc welding with several passes, using thoroughly dried basic electrodes, or perform the MIG-MAG welding procedures with suitable filler material. Do not overcharge. There should not have sharp edges or dross after welding.

~~b)~~g) Perform back welding as specified in point (a).

~~c)~~h) Leave the structural members to cool slowly and evenly. It is not permissible to use jets of air or other means.

~~d)~~i) Grind off the excess material.

~~e)~~j) Apply steel corner strengthening, with the same specifications as the steel used in the chassis frame. The approximate minimum dimensions are given in the above illustrations. They are to be fixed solely on the vertical rib of the structural member and it is possible to use bead welding, dummy spots, screws or rivets. The cross section and length of the weld bead, the number and distribution of the dummy spots, screws or rivets must be suited to transmit the bending and cutting of the section. On completing the work, the part involved in welding must be effectively protected with rust proofing.

带格式的: 项目符号和编号

——SECTION 13

ELECTRICAL/ELECTRONIC SYSTEM

PAGE

GENERAL WARNINGS FOR ELECTRICAL/ELECTRONIC COMPONENTS

Do not ever disconnect the batteries from the system with the engine running.
Do not start the engine without first having connected the batteries in a permanent manner.

- **Before working on the vehicle, immobilize the wheels with chocks.**
- **Do not use fast chargers to start the engine. Engine starting can be performed either by means of separate batteries or by means of a special truck.**
- **Incorrect polarization of the power supply voltage for the electronic control units (e.g. erroneous battery polarization) may damage the components irreversibly.**
- **If you have to disconnect the batteries from the system, always disconnect the frame ground cable from the negative terminal of the batteries first.**
- **Before connecting the batteries to the system, make sure that the system is suitably insulated.**
- **Disconnect the batteries from the system before recharging them by means of an external unit.**
- **Disconnect the external recharging unit from the main power before removing the charging pliers from the battery terminals.**
- **At temperatures of over 80℃ (drier ovens), take out the ECUs.**
- **At the connection stage, tighten the flanged nuts of the connectors (temperature and pressure sensors, etc.) to the required torque. Check the exact polarity of the battery terminals when starting the engine by means of the auxiliary truck.**
- **Before working on the vehicle's electrical/electronic system, disconnect the positive pole of the battery.**
- **Before disconnecting the connector from an electronic control unit, isolate the system.**
- **Do not cause sparks to check whether a circuit is live.**
- **Do not use a test bulb to check the continuity of a circuit. Only use the appropriate testing devices.**
- **Do not directly power the components associated with electronic control units with the nominal power rating of the vehicle.**
- **Make sure that the wirings of electronic devices (length, type of cable, location, grouping, connection of screen**

Key storage procedures are affected by electromagnetic disturbances such as cell phones and the like. Therefore, during key memorization:
1. **Ensure there are no sources of disturbance in the cab or close to the keys.**
2. **Keys not inserted in the panel**

When working on electronic control units, plug connections and electrical connections to the components. Measurements can be made only on suitable testing lines, by means of special plugs and plug-type bushes. Do not use improper devices under any circumstances. These include items such as metal wires, screwdrivers, clips and the like. In addition to the

Practical tips

Negative leads connected to a system bonded point must be both as short as possible, and set them at tightening point with STAR shape. Make sure to tighten each lead properly in correct sequence (See figure 1, M).

Furthermore, for electronic components, the instructions to be followed very carefully are:

- ECUs must be connected to the system's grounding device if they have a case.
- ECU negative cables must be connected both to a system grounding point, such as the dash compartment ground (with no 'serial' or 'chain' connections) and to the negative terminal(s) of the battery/batteries.
- Even though they are not connected to the system ground/battery negative terminals, analogue ground elements (sensors) must have excellent insulation. As a result, special care must be devoted to the resistance values of the cable terminals, which may be affected by oxidation, seam-folding defects, etc.
- The metal of shielded circuits must be in electrical contact at either end with system components.
- Only one end of the shielding braid may be connected to the grounding system.
- In the presence of jointing connectors, the non-shielded portion, **d**, must be as short as possible in the proximity of the connectors (Figure 2).
- Cables must be arranged so as to be parallel to the reference plane, i.e. as close as possible to the chassis/body structure.
- Additional electromechanical systems must be connected with the greatest care to the grounding system and must not be placed alongside the cables of electronic components.

SHIELDING BY MEANS OF A METAL BRAID OF A CABLE LEADING TO AN ELECTRONIC COMPONENT -C. CONNECTOR - d. DISTANCE→0.

Figure 1

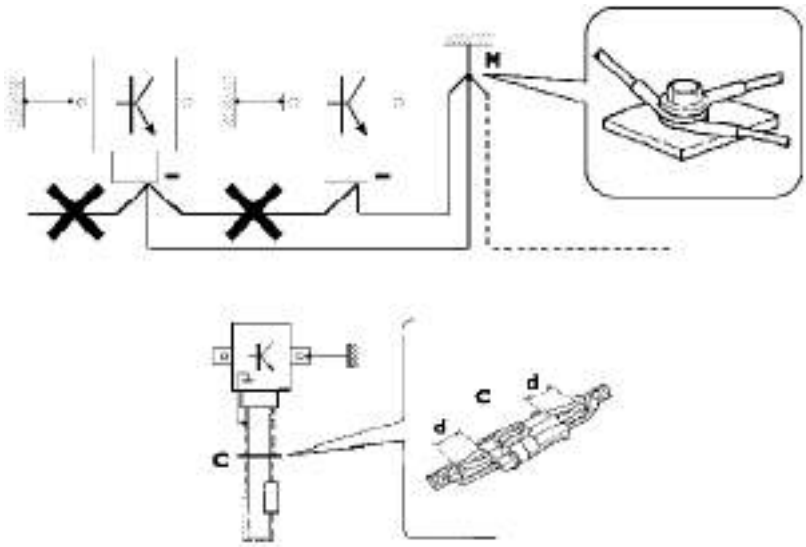

ELECTRIC COMPONENT CODE

03000	Alternator
08000	Starter
12032	Power-lift cabin oil pump
19015	Air-inlet heating grille
20000	Battery
22000	Horn
25007	Backup light relay
25035	Trailer light relay
25200	Start relay
25201	Preheating relay
25202	G.C.R. exciting relay
25203	G.C.R. opening relay
25204	Auxiliary engine starting button
25205	Auxiliary engine stopping button
25207	Alternator D+ grounding relay
25208	Relay with the functions of remote start enablement, gear engagement
25209	Relay for the electrical units with high-power (15/2)
25222	Relay for warming up the engine (air inlet heating)
25327	A/C relay
25332	A/C relay
25530	Relay for door opening (Tachograph D7 recorded the door opening)
25705	Diagnosis tester remote power switch (15)
25722	Power-lift cabin oil pump (Down)
25723	Power-lift cabin oil pump (Up)
25810	Fuel heater relay
25819	Reading light relay
25879	Interior dome lamp relay
25898	Relay for connection of rear transmission power takeoff
25903	EDC cut-off relay
30001	Front profile light (front LED combination lights)
31000	Front headlight
30011	Front fog light
32002	Front direction indicator
33001	Side direction indicator
34000	Rear combination lamp
34011	Trailer light (tractor operating indicator)
35000	Number-plate light
37000	Front/rear dimensions light
37001	Front dimensions light (cabin external ceiling light)
37002	Rear profile light
39000	Cabin interior dome lamp (courtesy lint, 21W)
39003	Courtesy foot lint
39009	Reading light
39017	Courtesy light for adjustable cabin interior light
39022	Interior dome lamp (5W)
40011	Tachograph
40032	Odometer secondary sensor
42031	Brake air pressure reaction plug
42030	Engine oil pressure & temperature sensor
42045	Outside temperature sensor
42102	Switch signaling handbrake applied
42351	Reaction plug for clogged air filter
42374	EDC clutch switch (to send the braking signal to the cruise control unit \ engine)

42551	Switch signaling oil filter blocked
42700	Fuel filter clogged indicator switch
44030	Diesel oil quantity sensor
44031	Oil quantity sensor
44035	Reaction plug for windshield washer fluid level
44036	Reaction plug for coolant level
44037	Reaction plug for power steering fluid
47042	Fuel temperature sensor
48035	Engine crankshaft sensor (speed)
48042	Engine camshaft sensor (on timing gear)
48043	Turbocharger speed sensor
50003	Combination meter
50005	Combination meter module 50003
52005	Rear view mirror switch
52007	Rear fog light switch
52009	Operating indicator switch
52024	Auxiliary high-beam headlight switch
52057	ABS cut-out switch
52071	Rear power takeoff switch
52092	Switch for engine or cabin heater
52094	Switch for small lamp (black-out lamp)
52200	Switch for electric or pneumatic horns
52302	Hazard warning light switch
52304	Switch for fog lights and rear fog lights
52307	Light switch
52312	Headlight beam level adjusting switch (No option)
52324	Combination switch lever RH (Engine brake switch)
52326	Interior light switch
52502	Key switch
52600	Main power supply switch
53006	Switch for starting from engine compartment
53007	Switch for stopping engine from engine compartment
53030	Switch for controlling starting assistance
53062	Hydro-lift cabin oil pump (Down)
53063	Hydro-lift cabin oil pump (Up)
53054	Limit switch button on side doors
53300	Switch for driver’s side electric window
53302	Switch for passenger side electric window
53306	Switch for controlling sun roof motor
53315	Fog light switch
53501	Brake pedal position reaction plug
53503	Reverse gear reaction plug
53504	Reaction plug for the difference of radius between wheels
53507	Reaction plug for slow & fast gears
53508	Neutral reaction plug
53509	Interior light switch
53510	Door closing sensor switch (Switch for switching on foot light)
53511	Reaction plug for the cabin locking signal
53512	Switch for antistarting engine device with handbrake off
53517	Reaction plug for the difference of radius between front drive axle wheels
53521	Axle difference locking reaction plug
53567	Reaction plug for signaling side power takeoff engaged
53568	Reaction plug for signaling rear power takeoff engaged
53593	Tool box switch (or tool box lamp switch)
54030	4-function steering column switch unit
54033	Combination switch LH (6-function steering column switch)
61011	Diode holder container
61069	4-pole connector
61071	20-pole connector
61101	Diesel oil preheater
61104	Air drier heating resistor
61121	
61126	Termination resistor for CAN bus
64000	Electric windshield washer pump

68000	Radio equipment
68001	Speaker
68005	Feeder 24V 12V
70000	Fuse holder
70058	One-way 20A fuse holder
70001	6-fuse holder
70002	6-fuse holder
70003	6-fuse holder
72006	Coupling with 7 poles for electrical connection of trailer ABS
72010	15-pole coupling for electrical connection to trailer
72021	30-pole diagnosis tester interface
72025	2-pole 12 V connection for main power supply
72026	2-pole 12 V connection for telephone
72049	3-pole coupling for rear-view mirror motor
72050	Unipolar current outlet
78016	Engine fan electro valve
78050	Engine brake soleniod valve
78052	ABS soleniod valve
78203	Solenoid valve for pneumatic horns
78227	Solenoid valve for radiator water recirculation
78238	Rear axle solenoid valve assembly for chassis alignment
78239	Front axle solenoid valve assembly for chassis alignment
78243	Rear axle electropneumatic distributor
78247	Solenoid valve for electronic injection
78248	VGT turbocharger (variable geometry section) control solenoid valve
78251	Solenoid valve for transmission side power takeoff
78252	Solenoid valve for transmission rear power takeoff
80000	Motor for right electric window
80001	Motor for left electric window
82000	Windshield defrosting control unit
82005	Auxiliary air heater
82010	Air-conditioning system electronic control unit
84009	Internal temperature sensor
84010	Metering device
84019	Electromagnetic pulley
85000	Cigar lighter
85001	Cigar lighter outlet
85003	Heated rear view mirror (trailer)
85004	Heated rear view mirror (wheel)
85005	Heated rearview mirror
85006	Electrically adjustable heated rear view mirror
85007	Wheel for electrically adjustable heated rear view mirror
85008	Trailer electrically adjustable heated rear view mirror
85010	Rear view mirror control
85150	EDC MS6 control unit
85152	Accelerator load sensor (EDC)
85153	Coolant temperature sensor (EDC)
85159	Temperature and ambient air pressure sensor for E.D.C.
86013	Sensor for signaling water in fuel filter
86053	Multiplex control and signal unit from bed positions
86116	BC (Multiplex body computer control unit)
86119	Multiplex driver door module control unit
86120	Multiplex passenger door module control unit
86123	Multiplex control unit for interface with steering control shaft
86124	Cabin with multiplex function electronic control unit
88000	ABS system electronic control unit
88001	ABS system sensor
88010	Rear axle brake application pressure sensor

GENERAL DESCRIPTION OF CAN BUS

Figure 2

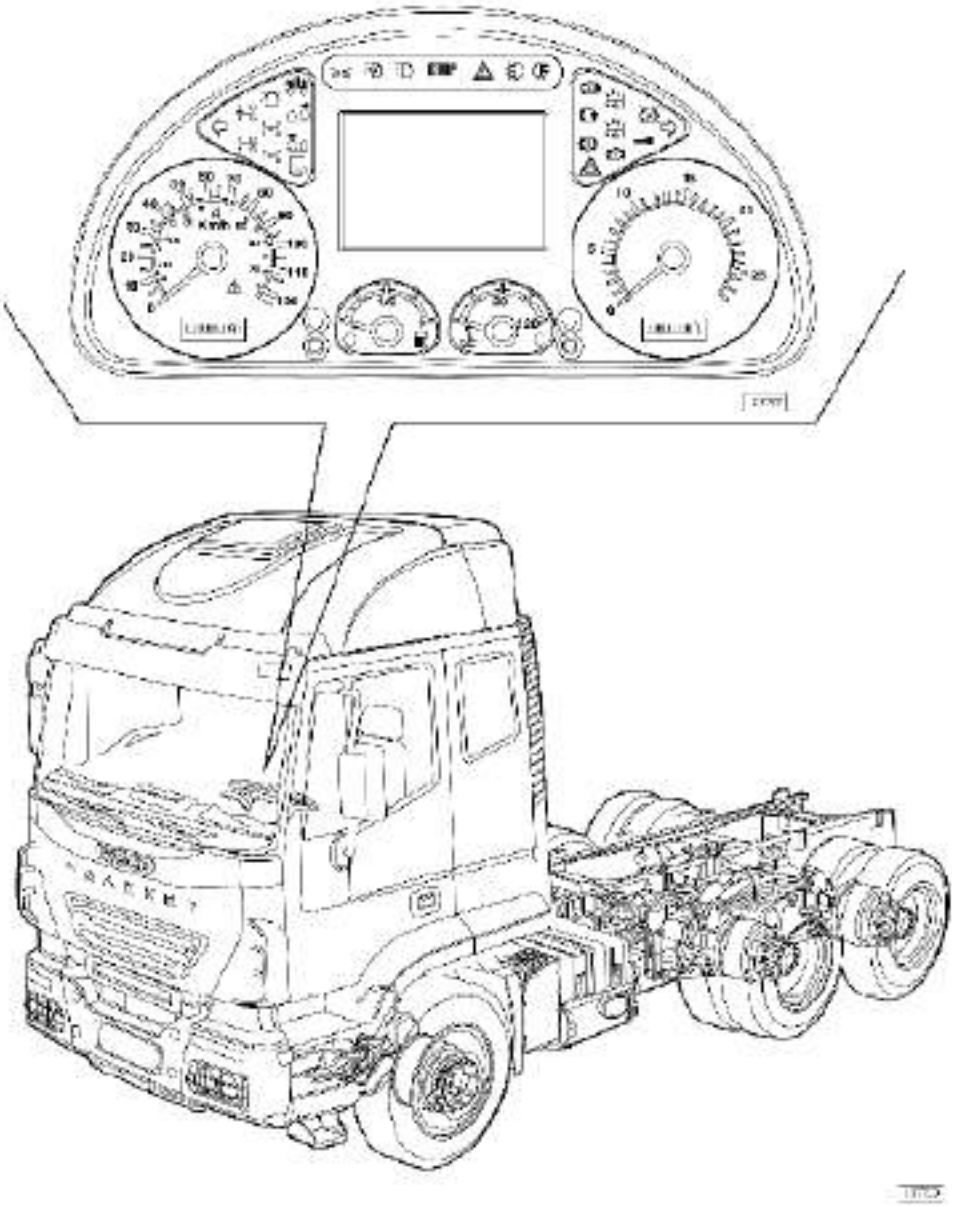

CAN－Control Area Network

Those control units in the traditional electrical system are centralized separately. With the enhanced requirements for vehicle safety, environmental protection, handling performance, electrical control units are correspondingly increasing. However, the traditional electrical system is more complex and there appears the need for a quick and reliable communications network to transfer data. This has been done through the establishment of the CAN Bus, the local area network in a vehicle.

This network should be fast and safe for transferring data information, and not affected by other electromagnetic signals, such as vehicle safety devices, transmission, brakes, engine and electronic central units, etc.

Vehicle circuit malfunction is related to the connection of wire harnesses and various malfunctions may result from poor wire harness connection, such as corroded or oxidized connector points, poor circuit joints, worn insulating layer, incorrect installation and so on.

Another cause could be sensor and actuator operating defects. Vehicle downtime is reduced

Conventional control

Figure 3

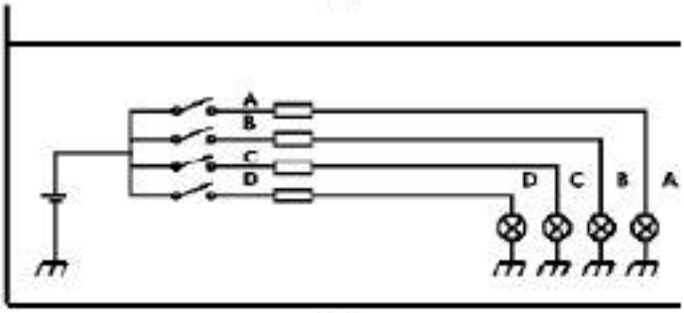

The conventional vehicle electrical system requires that each user item should be controlled directly by its switch, which necessarily requires the presence of cables with several

Multiplex control

Figure 4

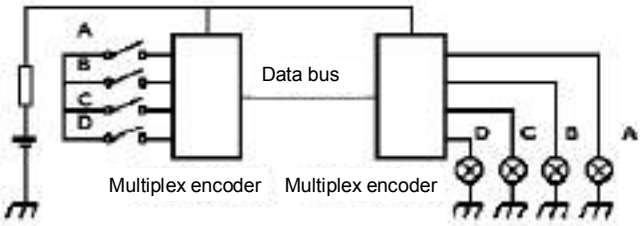

Unlike the system mentioned above, each switch in this setup is connected to a unit. A different coded value for each switch is communicated to the CAN communication line Databus. The signal is decoded by a Demultiplexer unit, which supplies the power required to the user unit involved.
Different transmission classes exist, according to Databus data transmission speed, as follows:
⑥Low speed for vehicle lighting and windshield wiper motor control
⑥Medium speed for air conditioning and audio systems
⑥High speed for ABS control systems and the like
The advantages of the Multiplex system can be summarized into lesser costs due to having shorter cables, increased functionality, sensor sharing by parts of the various systems and better on-board diagnostic functions. These are offset by greater costs compared to a conventional system and more related training.

Figure 5

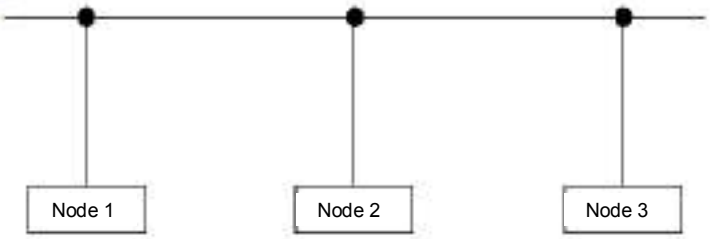

All centers are connected via a Control Area Network CAN line. The structure of MULTIPLEX is called as bus topolopy, which is very flexible; centers can be removed or added without interrupting the operation of others.
If node 2 sends a message, interaxed node 3 accepts the message while node 1 ignores it. Units can share the information of several sensors.

GENLYON CAN structure

There are 6 electronic control units and interfaces, which are connected to each another via GENLYON CAN line. These units are respectively dedicated to vehicle system control, such as ABS, EDC, IC and the like; to basic electrical/electronic systems for lights, windshield

Abbreviation for electrical wiring diagram

Vehicle systems	
EDC	**Electronic Diesel Control**
ABS	**Anti-Brake System**
BC	**Body Computer**
IC	**Instrument Cluster**

The CAN lines used to connect vehicle electronic control units (ECUs) use dedicated cables in parallel with each other, enabling the exchange of large amounts of data among the

CAN lines

Figure 6

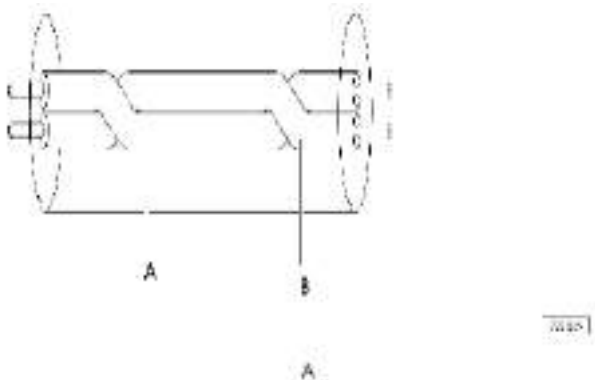

A. Guard wire - B. Twisted-pair wire

The cables used for the various CAN lines in the vehicles are twisted, which can eliminate electrical disturbances in the signals.

To check the efficiency of the CAN lines available in the vehicle, a few measurements have to be made of the respective lines and several cables are arranged parallel to the interface poles in ECUs.
To make such measurements, you must first turn the key switch to the OFF position and then disconnect the connectors from ECUs and connect a multimeter to the respective pins.

Note: Prior to carrying out any check on the CAN line, it is absolutely necessary that the batteries are insulated from the vehicle's electric system.

Values during measurements

0Ω	60Ω~90Ω	O.L.
0 CAN line in short circuit	CAN line OK	Both CAN line branches are disconnected

Vehicle Data Bus CAN line

Data information transfers among ECUs via this vehicle CAN line, with many central units connected, such as EDC, tachograph, ABS, diagnosis interface, combination meter and BC,

Figure 7

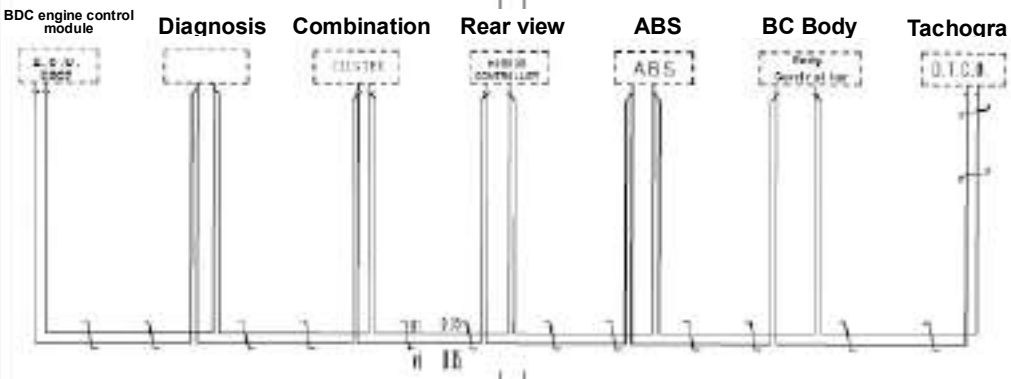

Features

- **Data transmission speed in BIT/SEC 250,000** — 250,000
- **Number of ECUs connected** — 3 ÷ 9

Note: Rear view mirror controller is optional.

Electrical circuit

Never disconnect the batteries from the system with the engine running.
Before connecting the batteries to the system, make sure that the system is well insulated.
Disconnect the batteries from the system when charging them.

The purpose of the electrical system is to generate, regulate, store and distribute the energy needed to make the vehicle components work.
Thus, the basic power supply of the electrical system is ensured by a generator and two batteries, each with 12 V 165 Ah connected in series.
A mobile fuse holder containing a 20 Amp fuse is located close to the batteries. This fuse supplies:

- Fuse holder 70001/C
- Body computer
- Instruments
- Tachograph
- 30-pole diagnosis connector

Main power cable section:

- Battery direct cable = 70 mm^2
- Fuse cables = 4 mm^2

The sections of other cables can be detected on the vehicle.

Negative grounding

The batteries are connected to the engine transmission assembly ground point on the rear cover of transmission with a brown 70 mm^2 cable and then to the ground point on the left sidemember.

The same cable serves to connect the whole engine unit and the ground point of body frame.

Ground point on vehicle body

Figure 8

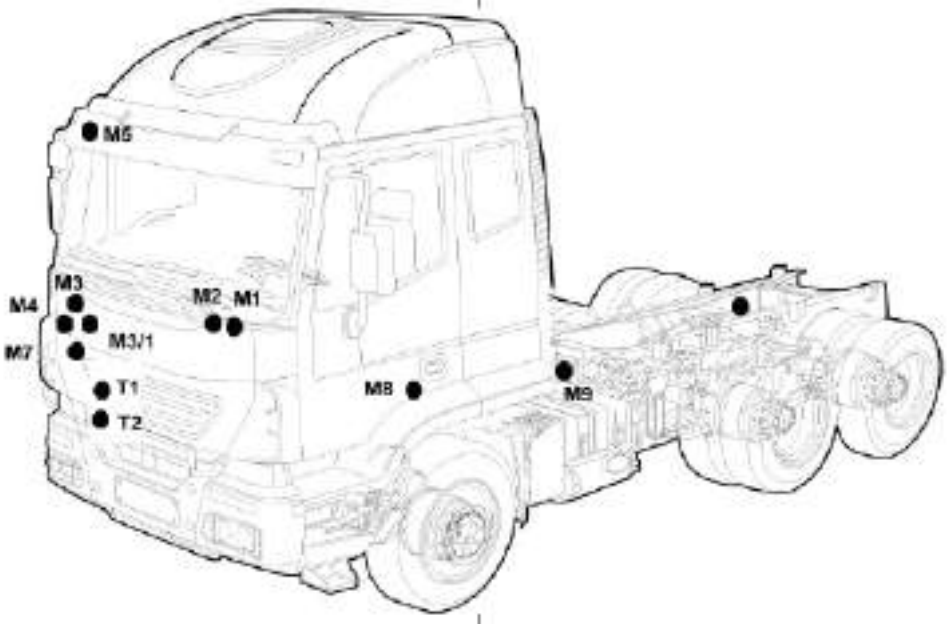

M1 Ground point on cabin instrument panel LH

M2 Ground point on cabin instrument panel LH

M3 Ground point on cabin instrument panel RH

M3/1 Ground point on cabin instrument panel RH

M4 Ground point on cabin instrument panel RH

M5 Ground point on cabin RH

M7 Ground point on front cabin RH

M8 Ground point on engine lower RH

M9 Ground point of engine wire harness on transmission assembly, Ground point of frame wire harness

T1 - T2. Cabin Ground wire (braided copper wire)

Cabin Ground wire

Though generally protected against the influence of on-board equipment voltage, electronic components nevertheless remain particularly sensitive to electromagnetic compatibility issues of different natures such as:

- Generated by the vehicles
- External.

A suitably sized, flexible electrolytic copper braid has been provided to minimize these phenomena and return the main cab and frame structures to the equipotential state.

Check that the braid is properly attached to the frame and the cab in the event of defective cab grounding.

Figure 9

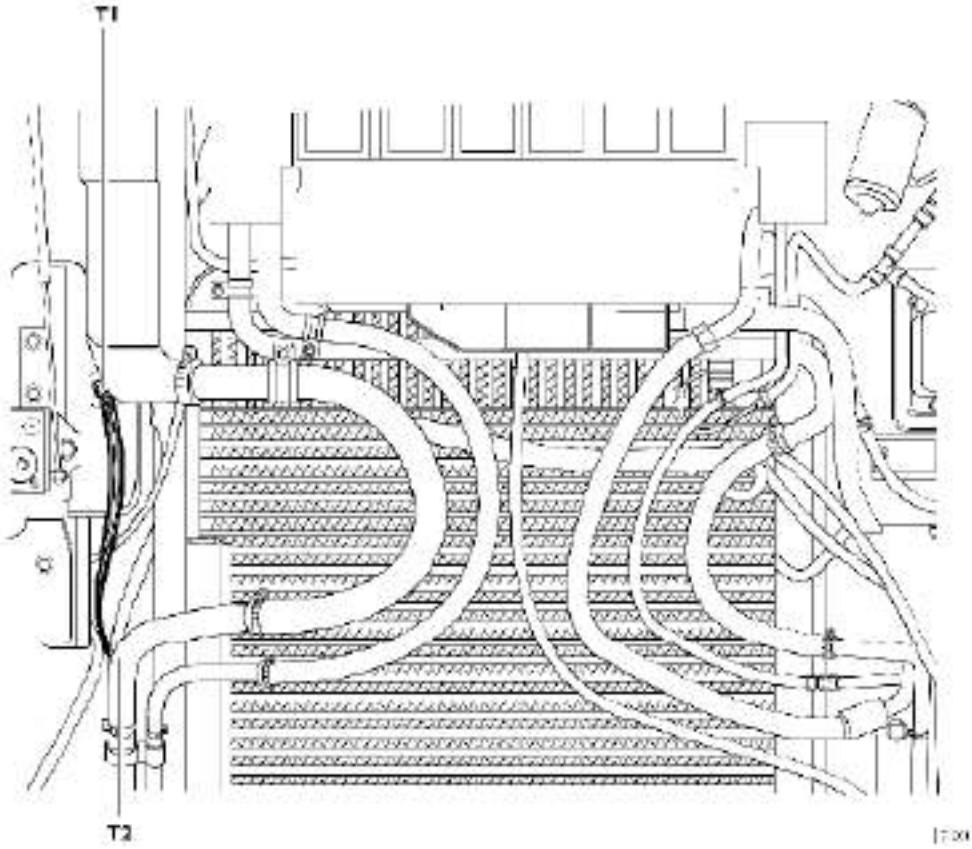

CONNECTION POINT OF GROUND WIRES BETWEEN FRAME AND CABIN

Figure 10

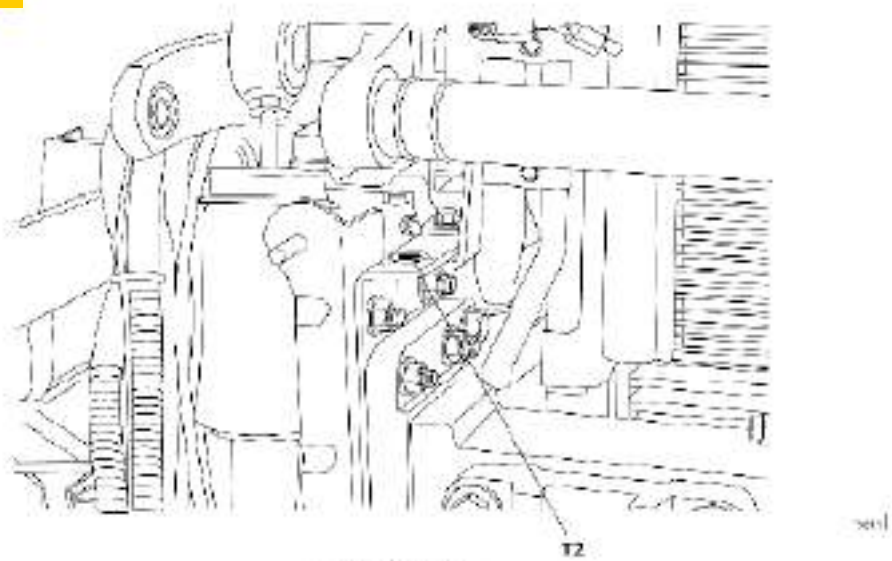

GROUND POINT ON THE RIGHT FRONT FRAME

Figure 11

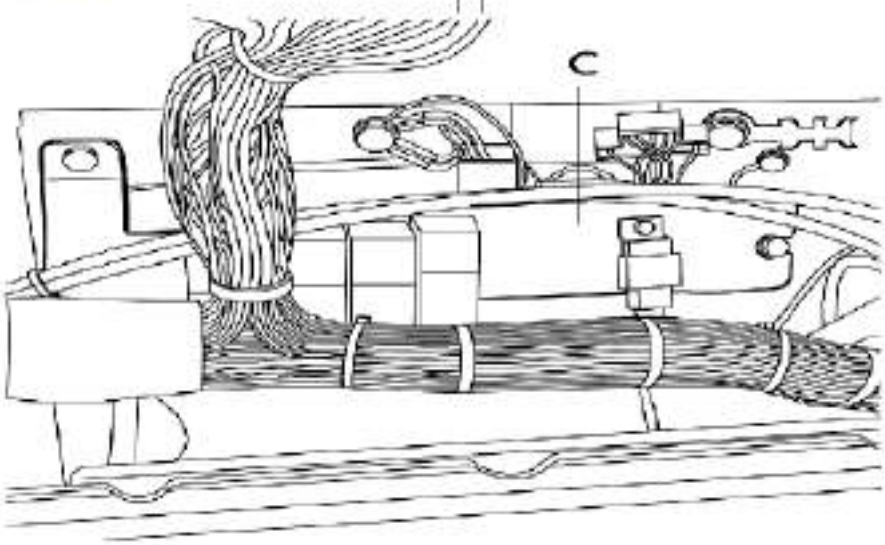

MASS GROUND POINT BEHIND THE BODY COMPUTER

Figure 12

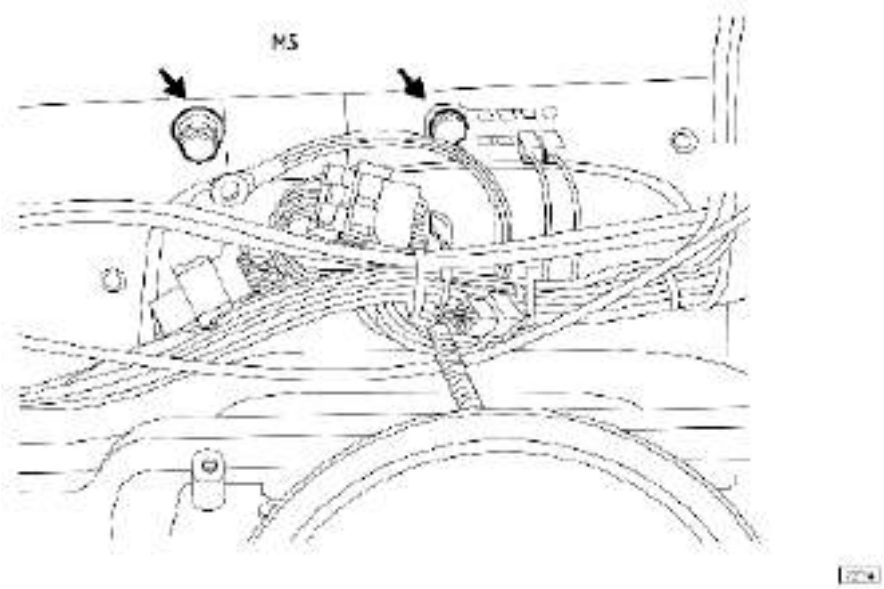

MASS GROUND POINT BEHIND THE INSTRUMENT PANEL

Overall harness constitution:

Frame wire

Engine wire

Engine additional wire

Battery additional wire

Left and right taillight wire

Left and right door wire

Ceiling wire (tachograph)

Ceiling additional wire (profile light, ceiling lamp, speaker)

Bed wire (Bed tool box)

Combination pedal wire

ST TABLE — WIRE HARNESS CONNECTORS

Connector locations

Figure 13

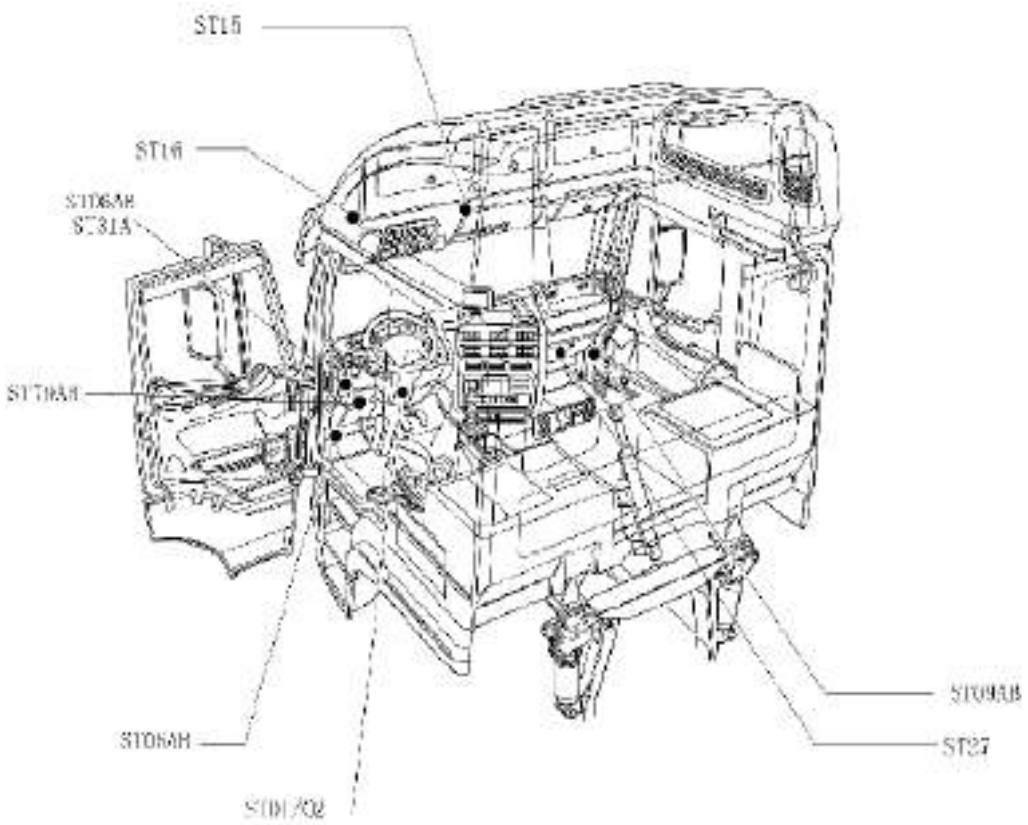

ST01 Key switch（steering column）

No.	Funct.	Connectors	Cable color code
1	Positive for power	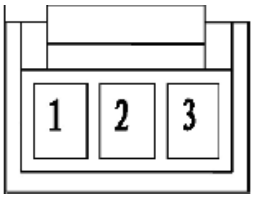	7777
2	+15		8887
3	+50		8037

ST02 Combination switch（steering column）

No.	Funct.	Connectors	Cable color code
1	Horn	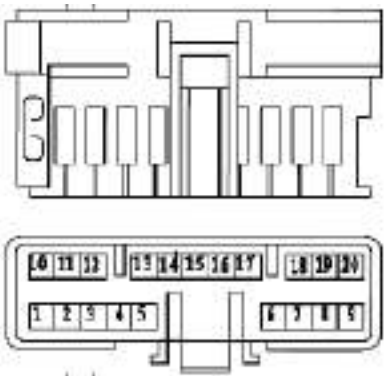	1116
2	Wiping, spraying		8886
3	Turn left		1123
4	Turn right		1129
5	High beam		2200
6	Hightlights beam switching when overtaking		2204
7	Intermittent level		8822
8	Wiping level I		8882
9	Wiping level II		8881
10	Ground		0000
11			
12			
13			
14	Cruise		9968
15			
16	Engine brake		8159
17			
18	+		8037
19	-		8887
20	Positive		7777

ST06 A Ceiling

No.	Funct.	Connectors	Cable color code
1	Ceiling bed lamp signal		7770
2	Positive for power		7704
3	Horn		4408
4	Horn		4408
5	Interior dome lamp		3304
6	Foot light		3314
7	Foot light		7770
8	Horn		4111
9	Horn		4111

ST06 B Tachograph, ceiling

No.	Funct.	Connectors	Cable color code
1	Low-beam headlight signal	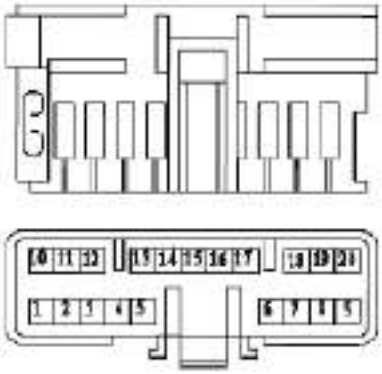	2223
2	High-beam headlight signal		2219
3	Right turning signal		1123
4	Left turning signal		1129
5	Fog light signal		3302
6	Odometer signal		xxx1
7	Odometer signal		xxx2
8	Odometer signal		xxx3
9	--		xxx4
10	Light switch signal		4442
11	Horn signal		1116
12	Door opening signal		7768
13	Diagnosis tester interface		5542
14	Diagnosis tester interface		2997
15	Positive		8879
16	Courtesy light relay		7768
17	Service braking signal		1117
18	Backup light signal		2226
19	--		wh
20	--		gn

ST08A Left door wire (All)

No.	Funct.	Connectors	Cable color code
1	Door glass up	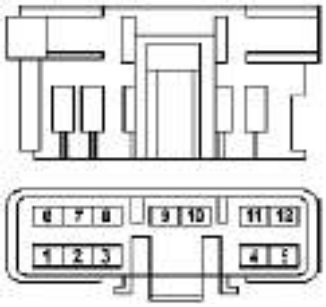	8861
2	Door glass up		8861
3	Door glass up		8861
4	Negative		0000
5	Horn positive		1188
6	Horn negative		1186
7	Positive for door centralized locking system		0065
8	Negative for door centralized locking system		0064
9	Door centralized locking system		9965
10	Door centralized locking system		9964
11	Positive for door switch reaction plug		0003
12	Positive for door switch reaction plug		0066

ST08B Left door wire (All)

No.	Funct.	Connectors	Cable color code
1	Main power rearview mirror LH		8830
2			0000
3			0000
4	Supplementary power rearview mirror LH		8808
5	Main power rearview mirror RH		8806
6	Supplementary power rearview mirror RH		8809
7	Main power rearview mirror up		8842
8	Main power rearview mirror down		8843
9			
10	Heating		0956
11	Heating		0953
12	Heating		0954
13	Heating		0951
14	Heating		0952
15			
16	Heating		4442
17			
18			
19			
20			

ST08(Standard)

No.	Funct.	Connectors	Cable color code
1	Door glass up		8861
2	Door glass up		8861
3	Door glass up		8861
4	Negative		0000
5	Horn positive		1188
6	Horn negative		1186
7			-
8			-
9			-
10			-
11	Positive for door switch reaction plug		0003
12	Positive for door switch reaction plug		0066

ST08A Right door wire (All)

No.	Funct.	Connectors	Cable color code
1	Door glass up		8861
2	Door glass up		8861
3	Door glass up		8861
4	Horn positive		1184
5	Horn negative		1183
6	Positive for door centralized locking system		0065
7	Negative for door centralized locking system		0064
8	Door centralized locking system		9965
9	Door centralized locking system		9964
10	Positive for door switch reaction plug		0003
11	Positive for door switch reaction plug		0066
12			

ST09B Right door wire (All)

No.	Funct.	Connectors	Cable color code
1	Positive for relay	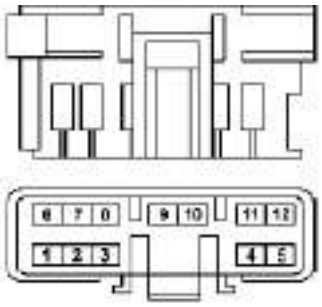	8830
2	Ground		0000
3	Positive for rearview mirror transversal motor		8858
4	Negative		8857
5	Positive for rearview mirror longitudinal motor		8859
6	Positive for under view mirror transversal motor		8852
7	Positive for under view mirror longitudinal motor		8853
8			
9			
10			
11			
12			

ST09 Right door wire (Standard)

No.	Funct.	Connectors	Cable color code
1	Door glass up	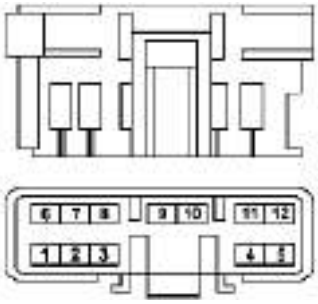	8861
2	Door glass up		8861
3	Door glass up		8861
4	Horn positive		1184
5	Horn negative		1183
6			
7			-
8			-
9			-
10	Positive for door switch reaction plug		0003
11	Positive for door switch reaction plug		0066
12			

ST15 Ceiling wire speaker

No.	Funct.	Connectors	Cable color code
1		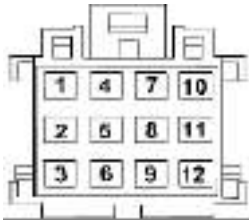	
2			
3	Signal for the side lamps		3018
4			3018

ST16 Horn

No.	Funct.	Connectors	Cable color code
1	Horn positive	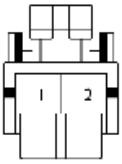	1188
2	Negative		1186
3			
4			

ST31A Bed (Standard)

No.	Funct.	Connectors	Cable color code
1	Positive for bed lamp	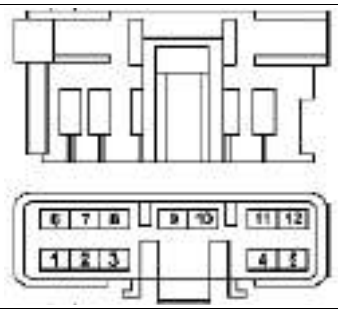	7770
2	Negative		0000
3	Positive for the tool box locking motor		7772
4	Positive for the tool box switch		4442
5	Negative		0000
6	Negative		0000
7	Positive for the tool box locking motor		7772
8			
9			
10			
11			
12			

ST79A Combination pedal

No.	Funct.	Connectors	Cable color code
1	Horn	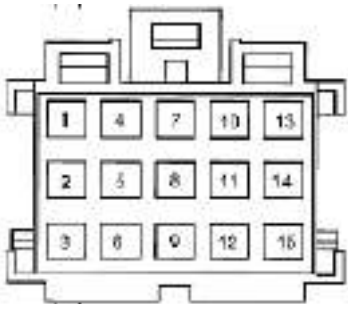	1116
2	Negative		0000
3			
4			
5	Brake pedal signal		1117
6	Brake pedal signal		8158
7	Brake pedal positive V3		8362
8			
9	Positive V3		8362
10	Wiper motor returning positive		8873
11	Wiper motor high level		8882
12	Wiper motor low level		8881
13			
14	Clutch pedal signal		0160
15			

ST79B Combination pedal

No.	Funct.	Connectors	Cable color code
1	Master brake valve pneumatic pressure positive	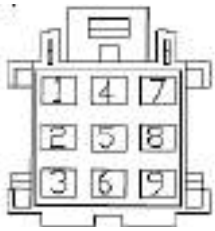	5562
2	Master brake valve pneumatic pressure signal I		5560
3	Master brake valve pneumatic pressure signal II		5560
4	Master brake valve pneumatic pressure signal circuit		5561
5	Negative		0000
6	Negative		0000
7			
8			
9			

Combination switch LH 54033

Figure 14

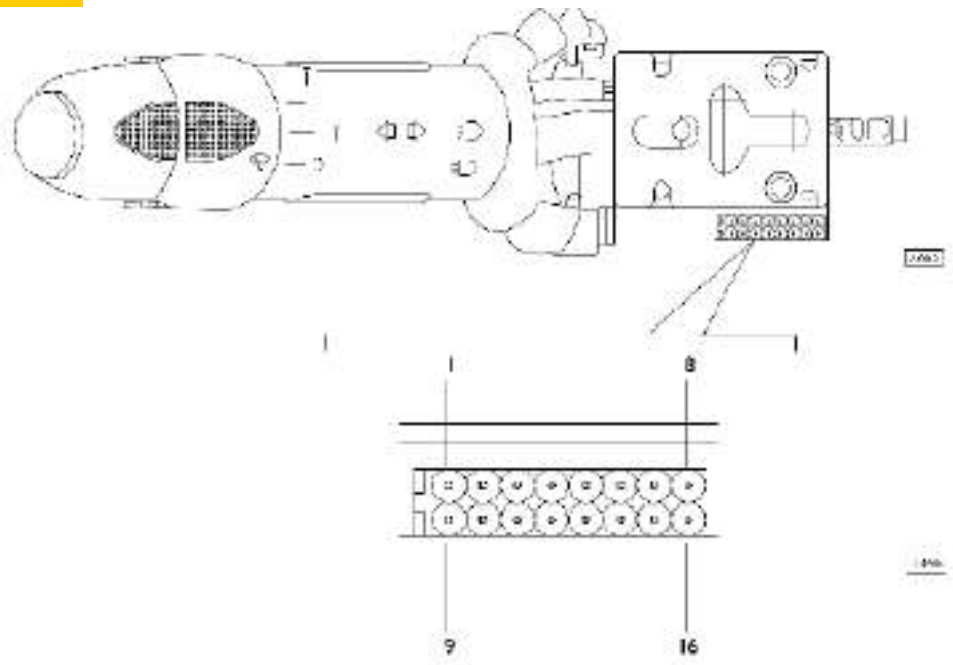

No.	Description
1	Windshield wiper (top speed)
2	Windshield wiper (slow speed)
3	Windshield wiper (intermittent)
4	Windshield wiper (one stroke)
5	-
6	Low beam lights on
7	Light flashes
8	Mass
9	Windshield washer control
10	-
11	-
12	-
13	-
14	-
15	Right direction indicator
16	Left direction indicator

Combination switch RH 54030

Figure 15

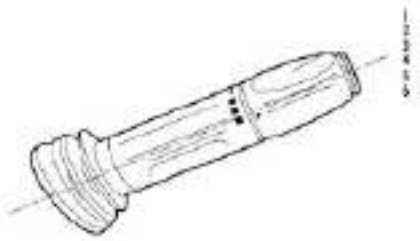

Combination switch RH

The multifunction lever located on the right side of the steering column enables several functions as needed, such as engine braking, engine exhaust braking and cruise control.

Operation description:

To enable the function of engine braking switch:

Engine brake

To enable the function of engine exhaust braking switch:

Both the functions of engine braking and engine exhaust braking operate at the same time

When the operator selects the engine exhaust brake manually, selection is displayed in the instrument panel with a

Diagnosis interface

PIN			
System	PIN	Funct.	Cable color code
	1	-	-
EDC	2	K	2298
ABS	4	K	2299
--	5	-	
	6	K	2293
	7	-	-
	8	K	2295
	9	-	-
	10	K	2296
Diagnosis tester remote control	11	+ 15	8802
--	12	K	2262
	13	-	-
Line K	14	K	2994
	15	-	-
	1		

Figure 16

FRONT VIEW

On the lower right part under the central instrument control panel, there is a 30-pole diagnosis interface for performing the diagnosis of electronic systems on the vehicle.

CABIN J/B CONNECTOR

Speed signal

Connector A — White (ABS)

Connector B — Brown (front combination lights)

Connector C — Yellow (empty)

Figure 17

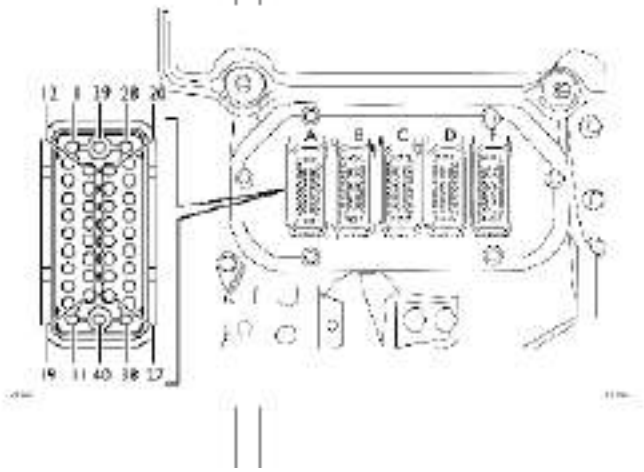

The new bayonet connectors make signal continuity much more reliable than the previous system.

WALLTHROUGH "A"					
Pin	S.N.	Wire code	Wire diameter	Page	Description
1	2	9921	1	24	ABS front solenoid valve LH
2	2	9919	1	24	ABS front solenoid valve LH
3	2	5570	0,75	24	ABS front sensor LH
4	3	5570	0,75	24	ABS front sensor LH
5	2	5571	0,75	24	ABS front sensor RH
6	3	5571	0,75	24	ABS front sensor RH
7	2	9918	1	24	ABS front solenoid valve RH
8	2	9920	1	24	ABS front solenoid valve RH
9	2	9929	1	24	ABS rear solenoid valve LH
10	2	9931	1	24	ABS rear solenoid valve LH
11	2	5572	0,75	24	ABS rear sensor LH
12	3	5572	0,75	24	ABS rear sensor LH
13	2	5573	0,75	24	ABS rear sensor RH
14	3	5573	0,75	24	ABS rear sensor RH
15	2	9930	1	24	ABS rear solenoid valve RH
16	2	9928	1	24	ABS rear solenoid valve RH
17	107	0000	1	24	ABS front sensor LH ground

24					
25					
26					
27					
28					
29					
30					
31					
32					
33					
34					
35					
36					
37					
38					
39	29	7772	4	34	ABS trailer connector
40	199	0000	4	34	Ground

WALLTHROUGH "B"					
Pin	S.N.	Wire code	Wire diameter	Page	Description
1	4	3304	1	13	Left profile light
2	2	3314	1	13	Right profile light
3	2	2219	1	13	Left high-beam headlight
4	2	2221	1	13	Right high-beam headlight
5	2	2231	1	13	Left low-beam headlight
6	2	2223	1	13	Right low-beam headlight
7	5	1129	1	13	Front direction indicator LH
8	6	1123	1	13	Front direction indicator RH
9	6	2228	1	13	Front fog light LH/RH

WALLTHROUGH "C"					
Pin	S.N.	Wire code	Wire diameter	Page	Description
1	1	6659	0.5	31	Front differential lock
2	2	9325	1	31	Button for front differential lock
3	34	7777	0,5	45	Lift button
4	2	6662	0,5	45	Consent tinting (hand-brake inserted)
5	1	7753	2,5	36	Diesel oil pre-filter

WALLTHROUGH "D"					
Pin	S.N.	Wire code	Wire diameter	Page	Description
1	2	xxx1	0.5	21	Speed sensor
2	2	xxx2	0.5	21	Speed sensor
3	2	xxx3	0.5	21	Speed sensor
4	1	3307	1	37	Number-plate lights
5	2	2226	0.5	21	Reversing for D.T.C buzzer .O, connector trailer, reverse gear and
6	31	7772	0.5	34	+ From UCI for electrical connector for trailer
7	2	2270	0.5	34	Link between body and electrical connector trailer
8	23	7772	1	37	Power supply for reverse gear switch
9	1	7050	0.5	37	Neutral gear
10	5	3315	1	37	Rear taillight RH
11	4	3305	1	37	Rear taillight LH
12	1	3308	1	37	Left/right dimension light
13	1	1177	1	37	Left brake light
14	1	1172	1	37	Right brake light
15	1	2286	1	37	Rear fog light LH/RH
16	1	8840	1	35	Power supply for air drier
17	1	3305	0.5	34	Link between body and chassis connector stand
18	1	1180	0.5	34	Link between body and electrical connector trailer
19	1	1179	0.5	34	Link between body and electrical connector trailer
20	1	1185	0.5	34	Link between body and electrical connector trailer
21	1	3315	0.5	34	Link between body and chassis connector stand
22	1	5530	0,5	25	Signal wire for sensor detecting water in diesel oil
23	18	7772	0,5	25	Power supply wire for sensor detecting water in diesel oil
24	1	5552	0,5	25	Fuel quantity sensor
25	1	0652	0,5	25	Fuel quantity sensor
26	1	9144	0.5	25	Preparation caisson reversed
27	11	1123	1	21	Right direction indicator
28	1	6663	0,5	25	Air filter clogging sensor
29	1	9976	0,5	28	Slow gear sensor
30	15	7772	0,5	28	Cabin position sensor
31	2	6666	0,5	28	Cabin position sensor
32	131	0000	0,5	28	Cabin position sensor
33	26	7777	0,5	42	From Int. Gen. Batteries to dis relay. EDC
34	1	9325	1	31	Button for rear differential lock
35	1	6620	0,5	31	Rear differential lock
36	11	1129	1	21	Left direction indicator
37	1	9324	1	31	Button for inter-axle differential lock
38	1	6643	0,5	31	Inter-axle differential lock
39	17	7777	2.5	39	+ Battery
40	1	2224	2,5	31	Operating indicator

WALLTHROUGH "F"					
Pin	S.N.	Wire code	Wire diameter	Page	Description
1	KB9	wh	0,35	23	CAN EDC7
2	KB9	gn	0,35	23	CAN EDC7
3	1	8888	2,5	28	Start
4	1	7733	2,5	26	Fuel heating
5	6	8150	2,5	26	EDC7 power supply
6	1	2298	0,5	27	EDC7 checking lead
7	3	9906	0,5	27	Switch for stopping from engine compartment
8	3	9907	0,5	27	Switch for starting from engine compartment
9	2	0157	0,5	26	Accelerator pedal to EDC
10	2	0159	0,5	26	Accelerator pedal to EDC
11	2	0158	0,5	26	Accelerator pedal to EDC
12	2	5158	0,5	26	Accelerator pedal to EDC
13	2	5157	0,5	26	Accelerator pedal to EDC
14	2	8051	0,5	26	EDC7 power supply
15	1	7151	0,5	26	Trouble blink code
16	1	5535	0,5	26	Trouble blink code
17	1	0535	0,5	26	Trouble blink code
18	2	7732	0,5	26	Diesel oil pre-filter preheating
19	2	0087	0,5	26	Diesel oil pre-filter preheating
20	3	8158	0,5	27	Brake light switch
21	1	8362	0,5	27	Brake pedal/clutch pedal
22	2	5525	0,5	33	Power steering fluid level sensor
23	156	0000	0,5	33	Power steering fluid level sensor
24	2	5521	0,5	33	Windshield washer fluid level sensor
25	2	5527	0,5	33	Coolant level sensor
26	155	0000	0,5	33	Windshield washer fluid level sensor
27	151	0000	0,5	33	Windshield washer fluid level sensor
28	4	8886	0,5	28	Windshield washer motor
29	126	0000	0,5	28	Windshield washer motor
30					
31	1	0160	0,5	27	EDC clutch switch
32	7	7780	1	42	Alternator
33	2	8876	1	42	Alternator
34	2	8004	1	40	Air-conditioner compressor

ALTERNATOR

Figure 18

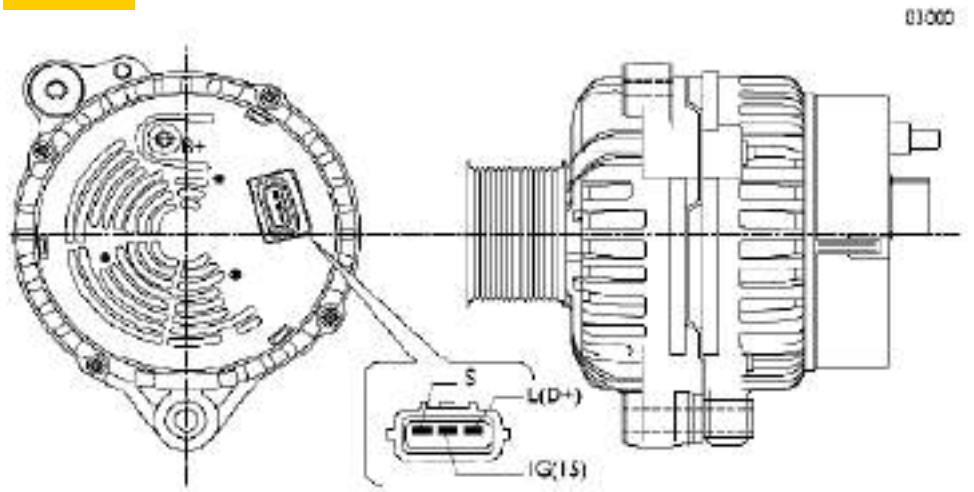

TECHNICAL VIEW

Figure 19

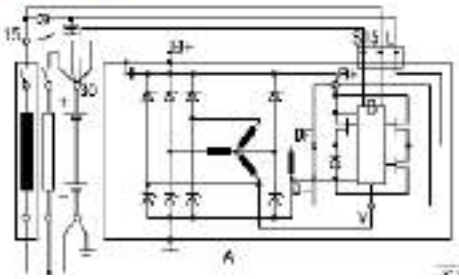

ELECTRICAL WIRING DIAGRAM
A Alternator B Voltage regulator

Figure 20

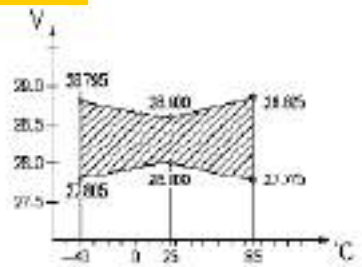

VOLTAGE REGULATOR TEMPERATURE CHARACTERISTICS (6000 RPM)

Figure 21

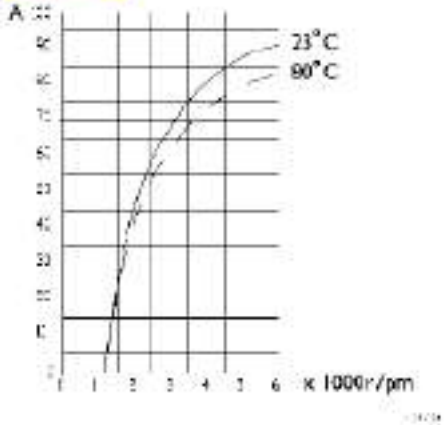

ALTERNATOR CURRENT DELIVERY CURVE

SPECIFICATIONS

Rated voltage	28V
Rated power	90A
Current and rated voltage at environment temperature at 25° C	1800 RPM/40 A
	6000 RPM/90 A
Direction of rotation seen from pulley side Clockwise	
Weight	7.8kg

Figure 22

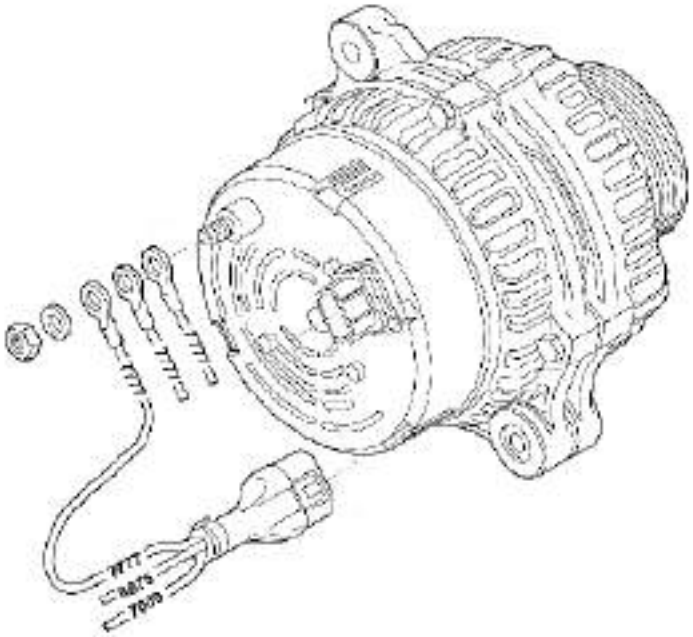

PERSPECTIVE VIEW WITH ASSOCIATED ELECTRICAL CONNECTIONS

No.	Funct.	Cable color code
L **15 (IG)** **S**	To F.F.C. center clamp J2/B24 To remote switch 25213 clamp 87 (via fuse F6-70601) Positive (+30)	**7009** **8876** **7777**
B+	Clamp S alternator Positive +30 power positive +30 positive to starter motor Positive +30	**7777** **7777** **7777**

Starter motor

Figure 23

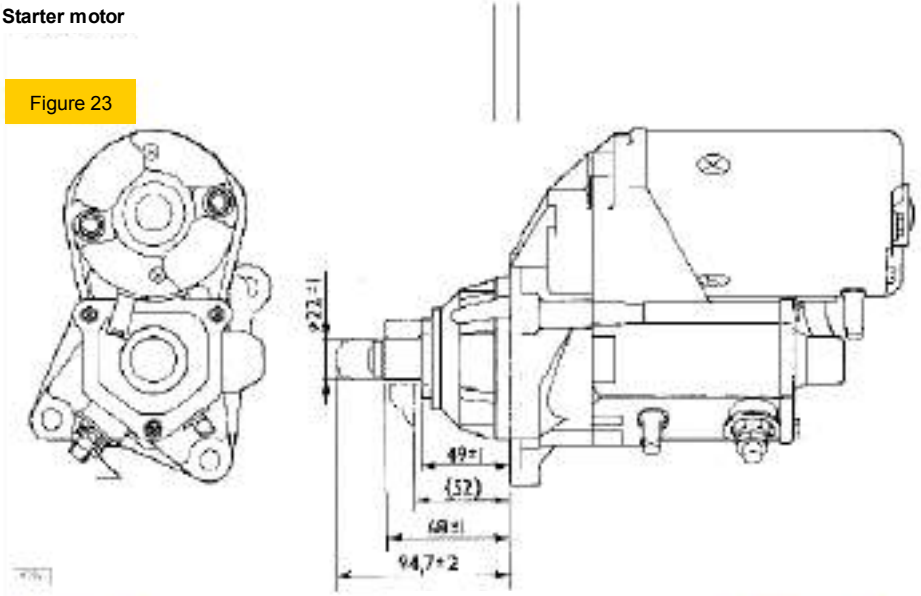

TECHNICAL VIEW

Figure 24

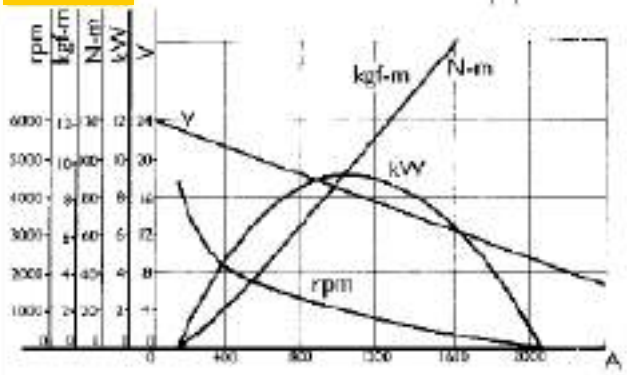

CHARACTERISTIC CURVES

Figure 25

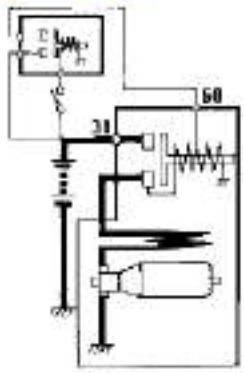

ELECTRICAL WIRING DIAGRAM

Characteristics		Specific Power (20℃)	Test conditions	Characteristics
Rated power	**5.5 kW**	**Loadless**	**23V**	**MAX. 120A (MIN. 3800rpm)**
System voltage	**24V**	**Load**	**16V （49N-m）**	**MAX. 690A (MIN. 3800rpm)**
Engagement system	**Positive approach control**	**Stall**	**6V**	**MAX. 1260A (MIN. 73.5 N-m)**

Figure 26

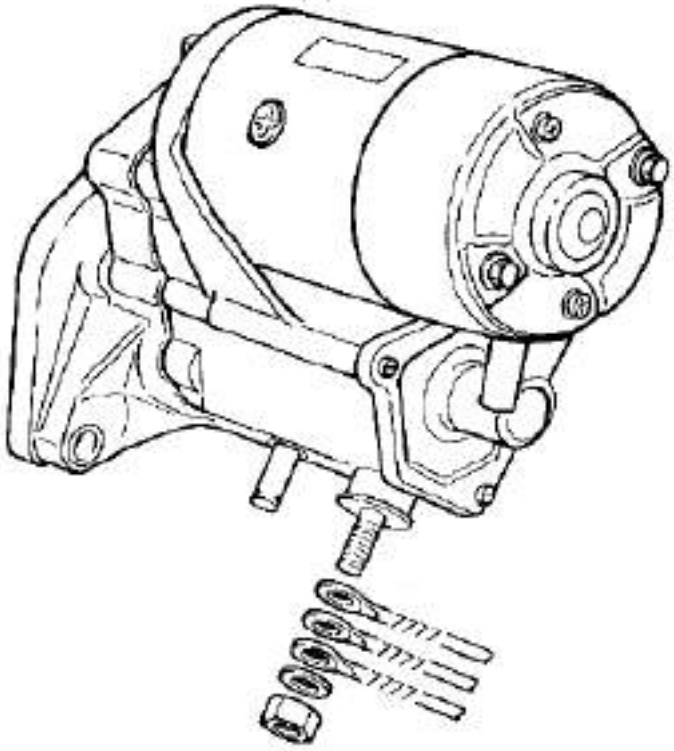

PERSPECTIVE VIEW WITH ASSOCIATED ELECTRICAL CONNECTIONS

Connectors	Funct.	Cable color code
+30	+30 positive for starter motor power from battery positive terminal (via the T.G.C.)	**7777**
+30	+30 positive to the alternator	**7777**
+30	+30 positive to the relay for warming up the engine	**7777**
+50	+50 positive for key switch	**8888**

FUSE HOLDER

FUSE

Figure 27

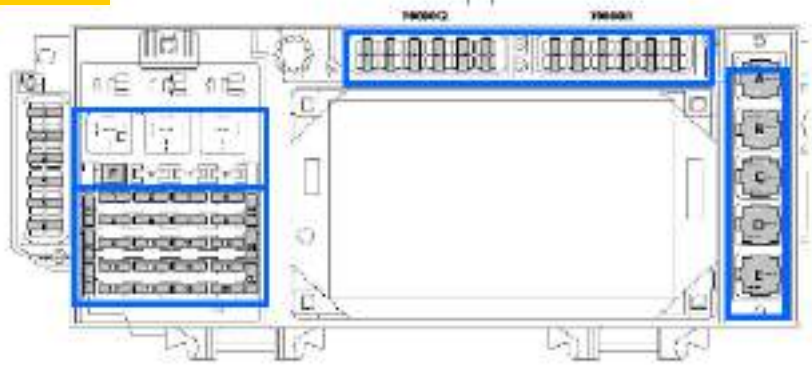

Fuse no.	Capacity	Funct.	Description
1	5A	Body controller (15), odometer, instrument cluster.	
2	5A	Cabin lifting, immobilizer, sensor detecting water in diesel oil, headlight beam level adjusting device, bed lamp	
3	10A	Odometer, body controller (left low-beam headlight —right high-beam headlight)	
4	10A	Backup devices on the vehicle	
5	5A	EDC7	
6	5A	Trailer socket (+15), body circuit output socket (+15)	
7	10A	Centralized door lock, supplementary heater, cooling device, radio.	
8	10A	Body controller (right low-beam headlight — left high-beam headlight)	
9	5A	Cabin body circuit output socket (+15)	
10	10A	Body controller (left parking light — brake light)	
11	10A	Body controller (direction indicator — hazard warning light)	
12	10A	Horn	
13	20A	Heat power window and windshield.	
14	20A	Electric heater, windshield drier.	
15	10A	Body controller (windshield washer — wiper)	
16	5A	Brake air drier and adjustable rear view mirror heating (control unit)	
17	5A	Outside lamp of body original setup unit output socket (+58).	
18	5A	Instrument cluster.	
19	20A	EDC7.	
20	10A	Body controller (right parking light — rear fog light)	
21		Backup fuse.	

Fuse	Pin	Capacity	Funct.
70000/1	1	10	30-pole diagnosis connector
70000/1	2	10	Cigar lighter, interior reading light
70000/1	3	10	Front fog light, roof
70000/1	4	10	External rearview mirror heating
70000/1	5	10	Backup light, trailer backup light
70000/1	6	10	Rear operating indicator, A/C
70000/2	1	20	Fuel heating
70000/2	2	10	Differential lock, tool box lock, lights
70000/2	3	20	Trailer ABS
70000/2	4	20	ABS battery
70000/2	5	5	+Key power supply
70000/2	6	20	Starter

Description for relay positions

Relay	Funct.
A	Vehicle detector relay
B	Fuel heater relay
C	Reading light relay
D	Front fog light relay
E	External rearview mirror heater relay
F	Heater relay
G	Horn relay

INSTRUMENT PANEL

Figure 28

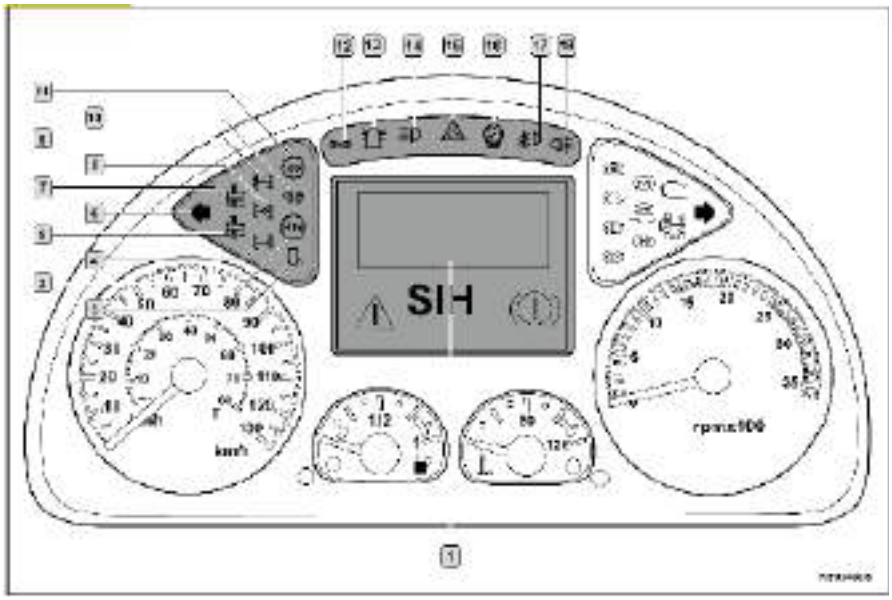

No.	Description
1	Liquid crystal display
2	Program-controlled speed limit indicator
3	Rear view mirror heating signal indicator
4	Differential lock signal indicator
5	Power take-off signal indicator
6	Left direction indicator
7	Power take-off signal indicator
8	Inter-axle differential lock signal indicator
9	Front axle inter-wheel differential lock signal indicator
10	Preheating signal indicator
11	Slow/fast gear signal indicator
12	Lighting signal
13	Rotating signal light
14	Headlight high-beam indicator
15	Hazard warning light
16	Instrument cluster malfunction signal indicator
17	Front fog lights
18	Rear fog lights

INSTRUMENT PANEL

Figure 29

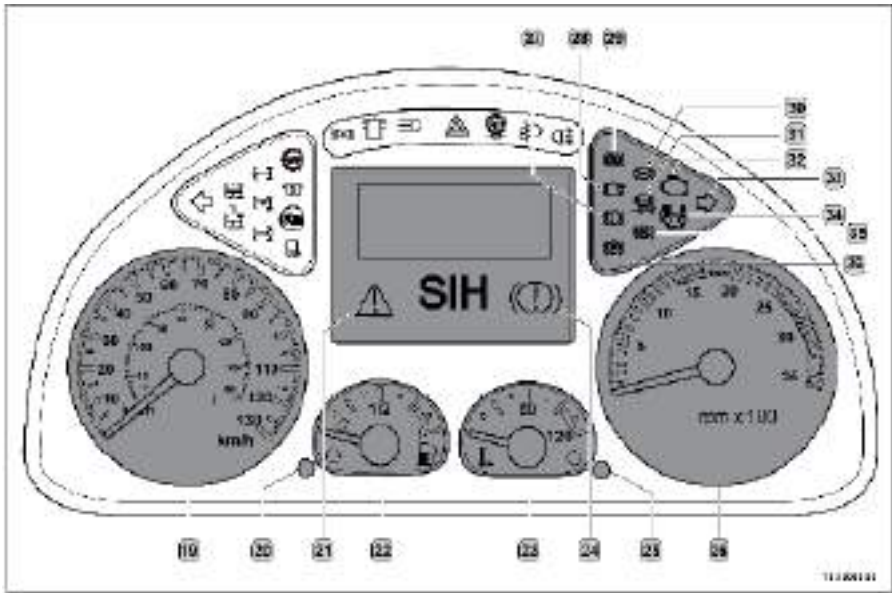

No.	Description
19	Odometer
20	Mileage counter reset
21	Slight trouble warning indicator
22	Fuel gauge
23	Coolant temperature gauge
24	Serious malfunction warning indicator (Vehicle stops)
25	Adjust the lighting intensity of instrument cluster
26	Revs counter
27	Brake system breakdown
28	Operation of the exhaust brake system
29	Operation of retarder
30	Tractor ABS
31	Trailer ABS system trouble
32	Low pressure in pneumatic suspension system
33	Right direction indicator
34	Air suspension system pressure warning
35	Backup
36	Operation of parking brake

INSTRUMENT CLUSTER & INDICATORS (CONT)

CENTER INSTRUMENT CONTROL PANEL

Figure 30

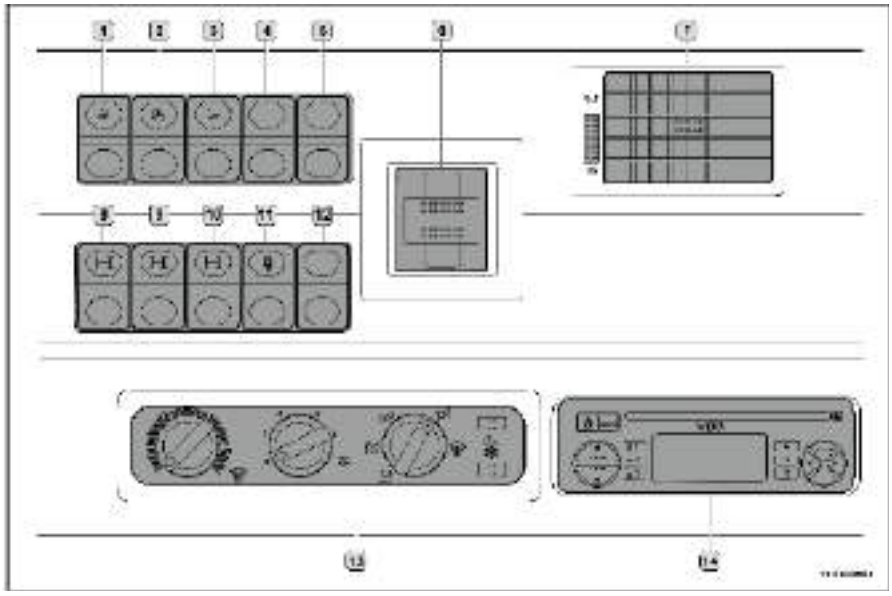

No.	Description
1	Dome lamp
2	Operating indicator
3	Switch for electric or pneumatic horns
4	Backup
5	Backup
6	Manual brake control valve
7	Air outlet
8	Switch for inter-wheel difference
9	Switch for inter-axle difference
10	Engine brake switch
11	Rear view mirror heating switch
12	Backup
13	Switch panel for cold and warm air
14	Radio

CAN BUS MULTIPLEX SYSTEM

OVERALL ECU SYSTEM LAYOUT

Figure 31

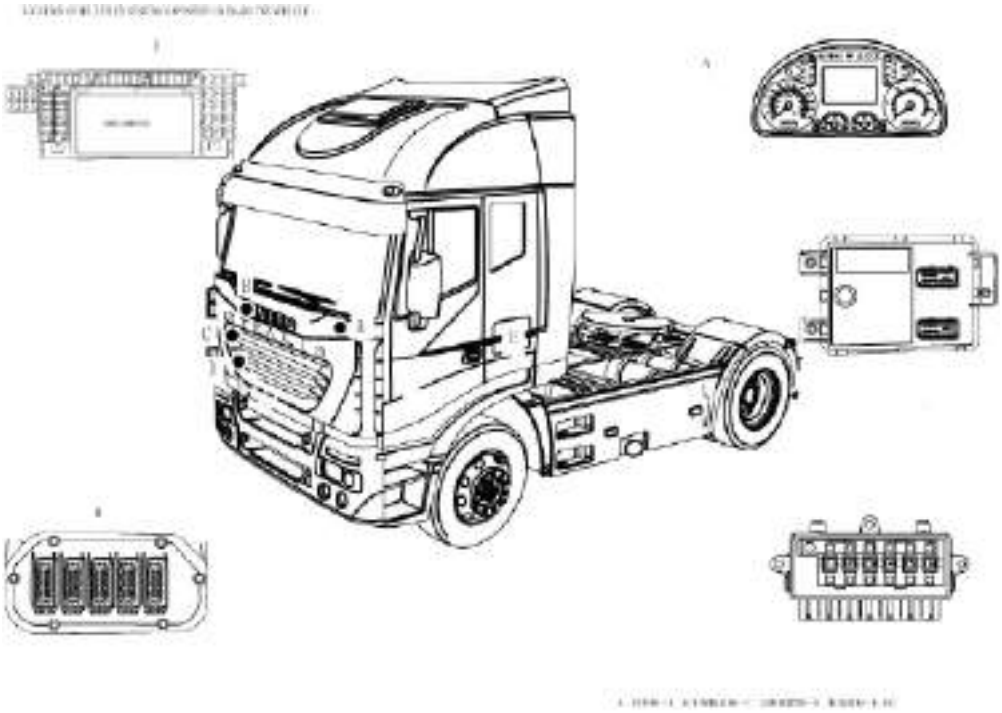

INSTRUMENT PANEL

Proceed as follows to remove the Cluster:

- Loosen the four panel retainer screws (B).

- Move the panel as far outwards as possible after relocating the steering wheel far from the panel.
- Disconnect the two Cluster attaching screws
- Loosen the four retainer screws (C)

Figure 32

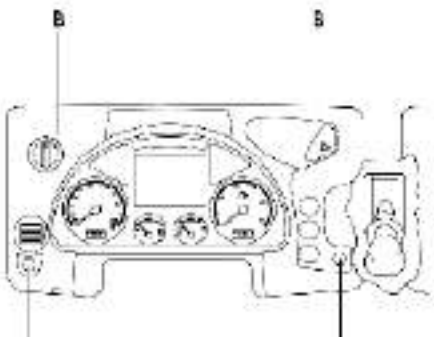

Figure 33

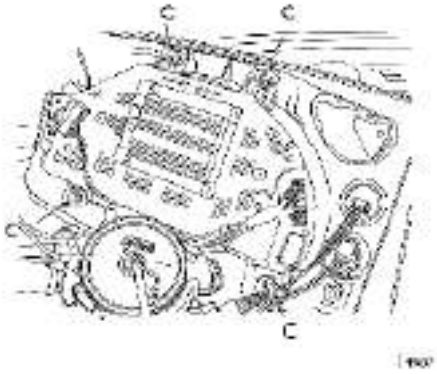

INSTRUMENT CLUSTER (SIGNAL INDICATOR)

Figure 34

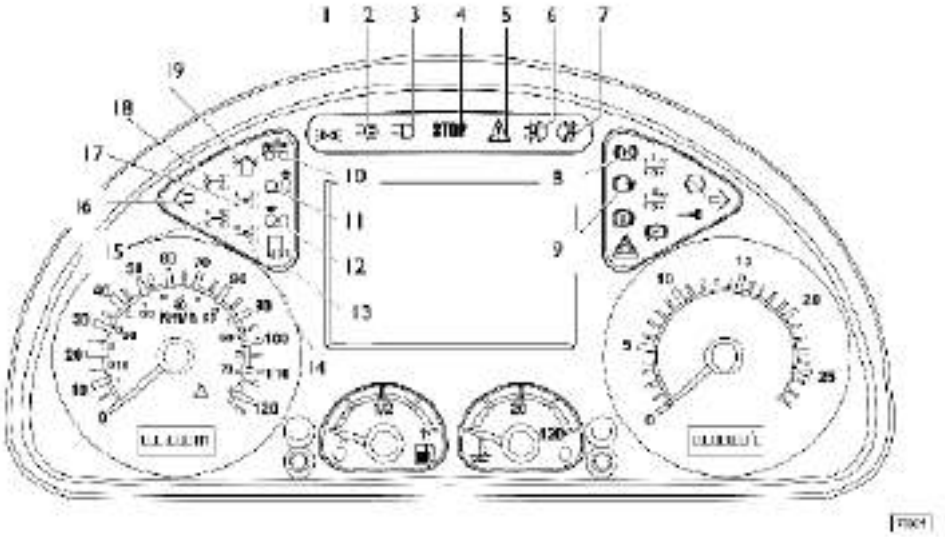

No.	Description
1	External lighting
2	Supplementary lights
3	High-beam headlights
4	General anomaly/breakdown warning
5	General alarm
6	Fog lights
7	Rear fog lights
8	*Retarder
9	*Engine brake
10	Stationary vehicle suspensions
11	Third axle raised
12	Start help
13	Rear view mirror heating
14	Front/rear longitudinal differential lock
15	Transversal rear axle longitudinal differential lock
16	Left direction indicator
17	Longitudinal differential lock
18	Transversal front axle longitudinal differential lock
19	Rotating headlights
*	Blinking light with function requested by the operator and fixed light with the function activated

Figure 35

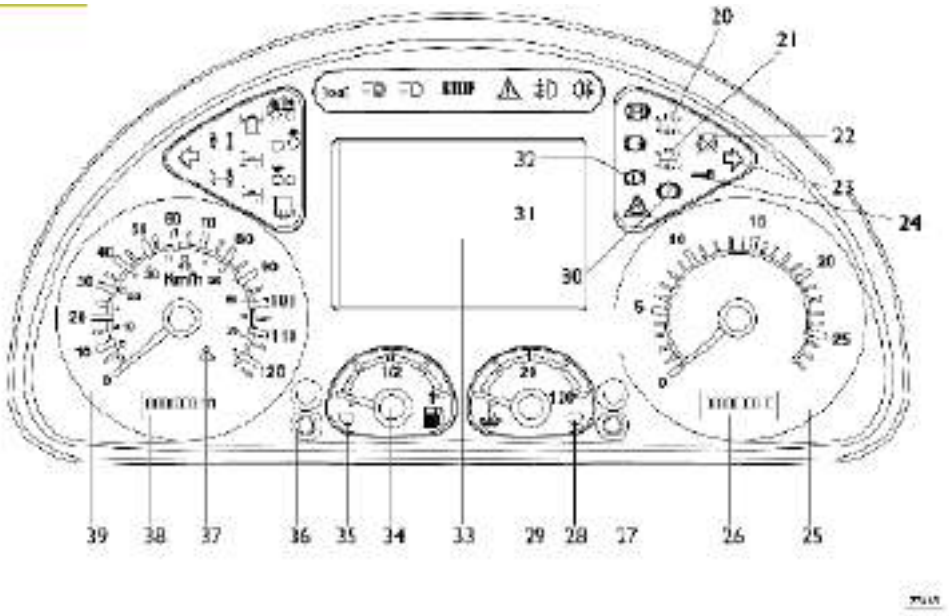

No.	Description
20	First PTO
21	Second PTO
22	Instrument panel breakdown (Cluster)
23	Right direction indicator
24	Immobilizer
25	Analogic rev counter
26	Hour/temperature display
27	Hour/temperature display button
28	Coolant temperature
29	Instrument lighting intensity
30	Parking brake ON
31	Emergency light
32	Brake system breakdown
33	Display
34	Fuel level
35	Reset
36	Km/mile indicator display button
37	Rev counter anomaly
38	Total/partial/Km/mile counter display
39	Analogic rev counter

CONNECTORS BESIDES THE INSTRUMENT PANEL

Figure 36

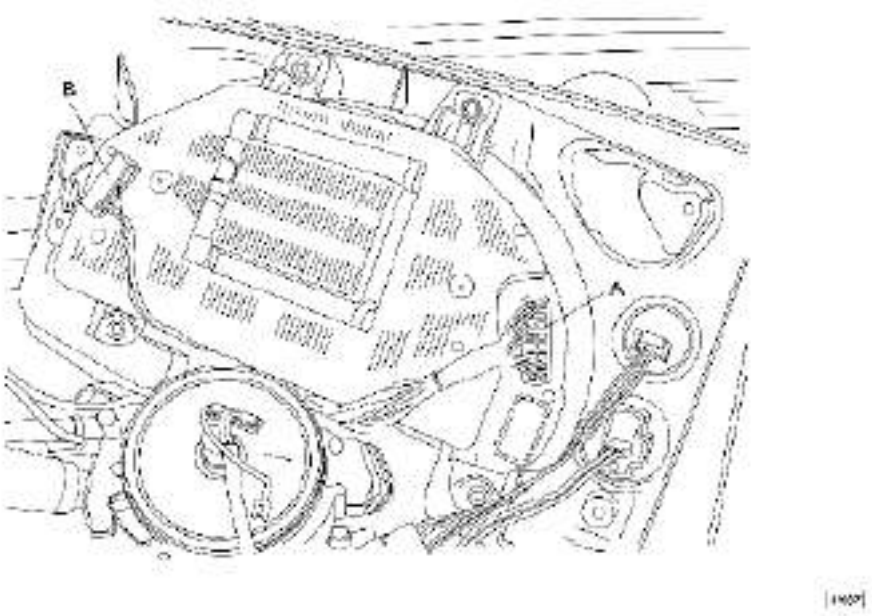

No.	A	Cable code	Compo-nent code	B	Cable code	Compo-nent code
1	K diagnosis line	2994	72021	-	72021	-
2	-	-	-	-	-	-
3	CAN H line		-	-	-	-
4	CAN L line		-	-	-	-
5	-	-	-	-	-	-
6	-	-	-	-	-	-
7	-	-	-	-	-	-
8	Predisposition	5543	ST 14/6	-	-	-
9	-	-	-	-	-	-
10		Bianco	-	-	-	-
11		Verde	-	EDC signal input	6150	85150
12	-	-	-	-	-	-
13		Bianco	-	-	-	-
14		Verde	-	-	-	-
15	-	-	-	-	-	-
16	Rev counter signal	5518	40011	-	-	-
17	Rev counter signal	5540	40011	-	-	-
18	Signal from hydraulic retarder (option)	5541	86015	Power from fuse	8871	70603/3
19	-	-	-	Mass	0000	-
20	Predisposition	5541	ST 14/7	Power from fuse	7606	70603/3

Display operation

Display varies subject to the following:
- Key on MAR with engine off
- Key on MAR with engine started and vehicle stationary
- Key on MAR at vehicle speed over 15 Km/h
- Key out

Key in MAR with engine off

Turning the key to MAR displays control of main vehicle systems.
Their presence is indicated in green, if all is OK, or yellow in case of a slight anomaly/breakdown; red indicates a serious anomaly/ breakdown and a buzzer is activated.

The list of systems present on the vehicle and their status can be displayed with CAN during Start-Up by receiving the diagnostic message from the ECUs.
System Check Ok or System Check Failed information is provided when Start-Up Test completes.
The system then sends a diagnostic trouble message that is displayed with the icon of the malfunction under review.

CAN system may indicate respective troubles of vehicle electrical systems on the instrument cluster. In case of a problem detected by the Body Computer, it sends the Instrument Cluster a message containing the following information via the CAN line:

- The status of the signal indicator associated with the problem (red for a serious and yellow for a slight anomaly)
- Trouble code

At receipt of the error message, the Instrument Cluster displays the following in the central display area:

- The colored icon related to the defective component or center
- Related trouble code

It also advises the operator by activating the Buzzer. After recognizing the problem, the operator presses OK and the central display area returns to showing the previous information (virtual tool or menu).
The icon related to the problem detected is stored in the lower layer of the display or with a specific warning.

Neither options that would distract the driver nor those unrelated to an operation useful for vehicle operation are available during operation, which is why the Menus available for a moving vehicle are reduced to the basic and essential items.
With the vehicle stationary, the complete set of available menus is enabled with keys ‘ ↑ ’ and ‘ ↓ ’.

Problems

After acknowledging the problem, the operator presses OK on the instrument panel and the icon appears in the lower display.

Yellow (light anomaly/malfunction):

Proceed with caution and contact a nearby Service Center or Workshop as soon as possible.

Red (serious anomaly/breakdown):

Park the vehicle on the roadside in a non-dangerous area and contact the Service Network or the 24 Hour Client Service Call.

Display structure

Figure 37

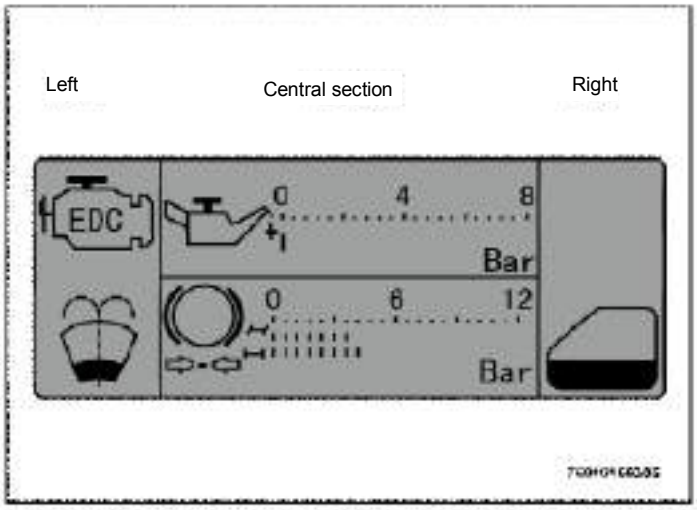

Left and right

- Failure diagram displays.

Central section

Status bar displays as shown in the figure:

- Engine oil pressure
- Failure messages

Optical status indicators on display

When the following functions are activated, corresponding symbols will be displayed. Note: The following are overall icon descriptions. Depending on the configuration, some of them might not display on your vehicle.

Figure 38

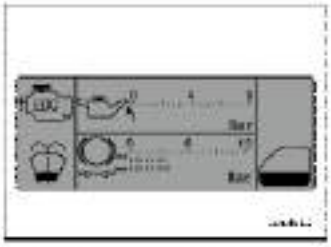

Meaning	Symbol	Color	Meaning	Symbol	Color
Preheating		Yellow	ASR ON	**ASR**	Yellow

Cabin unlocking		Red/yellow	ASR OFF	ASR	Yellow
Door open		Red	ABS failed or function cancelled		Yellow
Low front axle brake air pressure		Red	Trailer without ABS		Yellow
Low rear axle brake air pressure		Red	Dump truck cargo raised		Yellow
Low trailer brake air pressure		Red	Instrument cluster failed	IC	Red
Tractor operating indicator (only for tractor)		Yellow	Low engine coolant level		Red
Windshield defroster		Yellow	Very high engine coolant temperature		Red
Minimum engine coolant level		Yellow	Low fuel level		Yellow
High engine coolant temperature		Yellow	Trailer ABS/EBS failed		Yellow
Low windshield washer reservoir level		Yellow	Air filter clogged		Yellow
		Red	Water in fuel filter		Yellow
			Engine oil level too high		Yellow
Low level first power steering circuit		Yellow	High engine oil temperature		Red
Oil filter clogged		Yellow	Low air suspension pressure		Red
Fuel filter clogged		Yellow	Air conditioner failed		Red
Low engine oil level		Red	Additional heater failed		Red
Low engine oil pressure		Red	SWI ECU failed	SWI	Red
Low parking brake air pressure		Red	RFC ECU failed/abnormal	RFC	Yellow/red
Low trailer brake air pressure		Red	First importance light failed		Red
Low/poor generator charge		Yellow/red	Right turn indicator failed		Yellow
TCO ECU failure	TCO	Red	Left turn indicator failed		Yellow
Parking brake failure		Red	Central locking system failed		Yellow
Vehicle lighting system failure		Yellow	ABS failed	ABS	Red
BC ECU failure	BC	Yellow/red	Hydraulic retarder failed		Red
EDC failure	EDC	Red			

BOBY COMPUTER

The Body Computer is an electronically controlled central unit. Located in instrument panel on the passenger side package tray, the function of body computer is to manage every electronic element and to transmit messages to the other electronic elements.

Figure 1

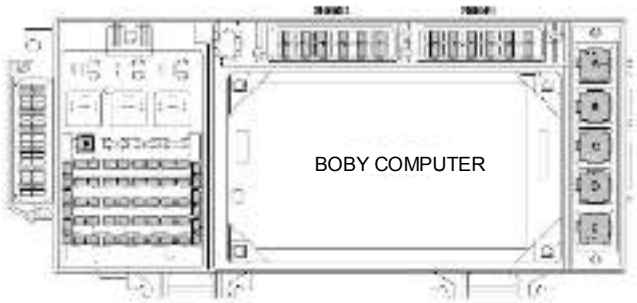

Input signals

- Vehicle external lighting
- Interior compartment lighting
- Horn
- Windshield wiper
- Engine start
- Coolant level
- Brake system low pressure
- Parking brake signals
- Cabin lifting signals
- PTO
- Door closing signals
- External temperature sensor
- Transmission signals
- Service brake signals

Output signals

- Interior compartment lighting
- Horn
- Windshield wiper
- Starter motor
- Vehicle external lighting
- Battery sectioning
- Motion output
-

Body Computer replacement operating sequence:

1. Turn key OFF
2. Disconnect other connectors in any order
3. Complete the replacement
4. Turn ON

Proceed as follows to remove the Body Computer:

- Press 2 switches (A) on the passenger side package tray.

Figure 40

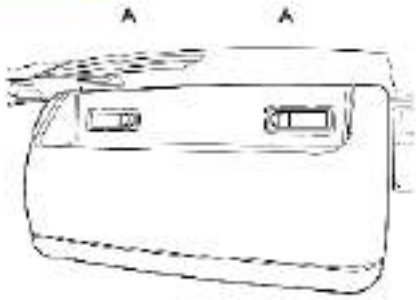

- Pull out the two fixing clips on the left and right Body Computers (B), then release the Body Computer Board.

Figure 41

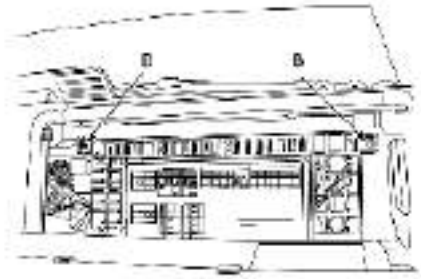

- Draw the Body Computer forward to avoid removing the connection cables.
- Remove wire harness connector on the back of the computer board.

Figure 42

Body Computer Interface perspective view

Figure 43

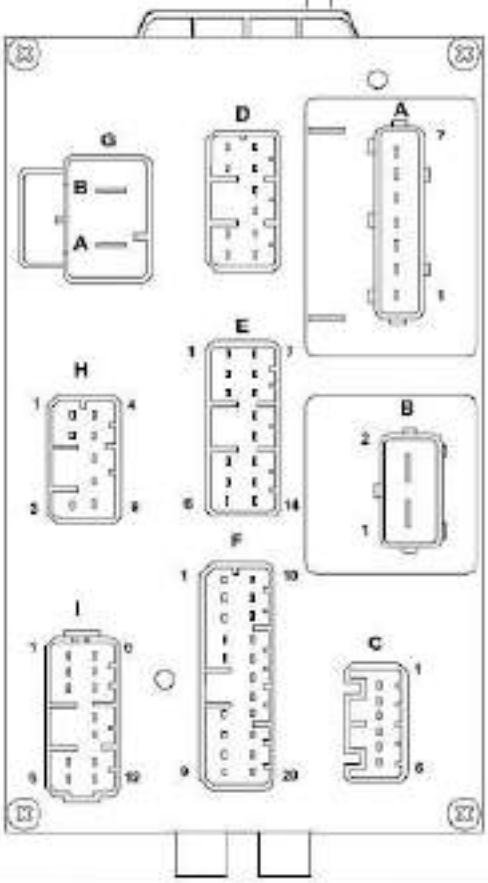

EDC. (Engine)

Figure 44

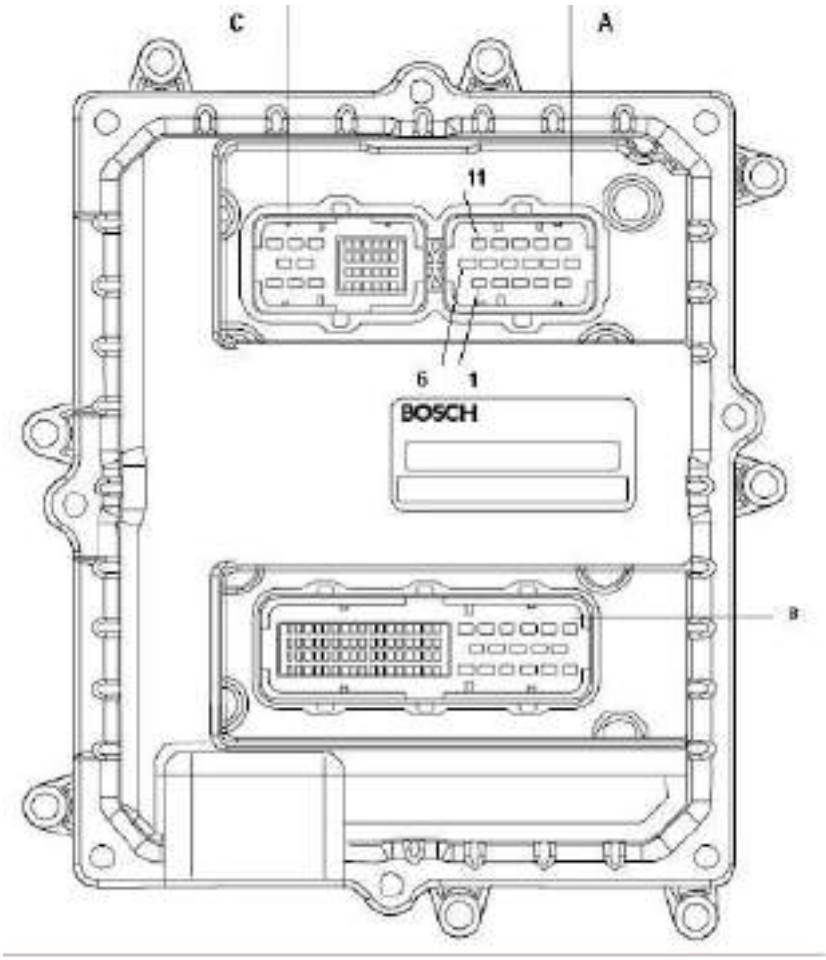

Located on the back of engine. Proceed as follows to remove the electronic center:

- Disconnect the power supply master switch
- Remove A, B and C junction boxes.
- Disconnect the two connectors without removing cables from the connector seat

Heater assembly layout

Figure 45

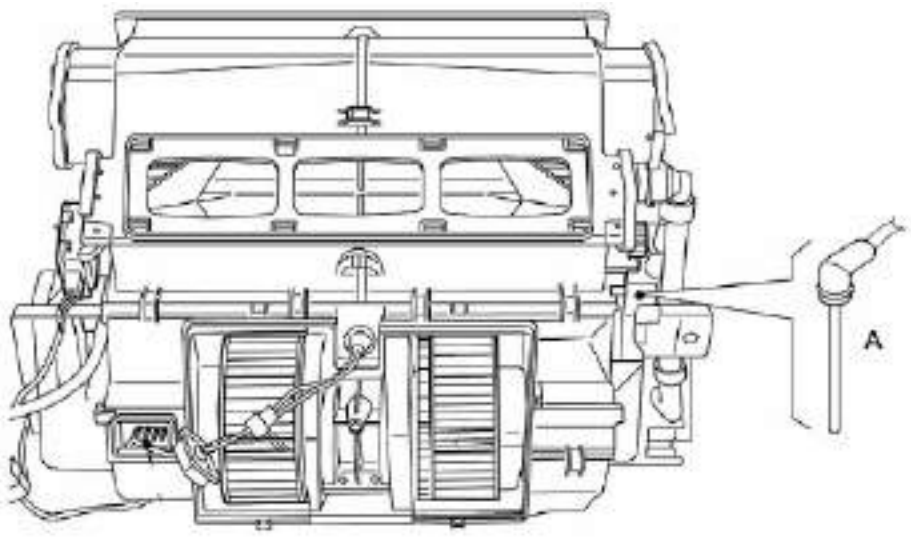

A. Evaporator temperature sensor

Evaporator temperature sensor

The sensor placed inside the evaporator generates compressor connection and disconnection.
Stop the compressor when below 2°C to prevent ice formation. Start the compressor if the temperature is above 5.5°C.The resistance is about 3.28 Kohm when the temperature is at 25°C.

Figure 46

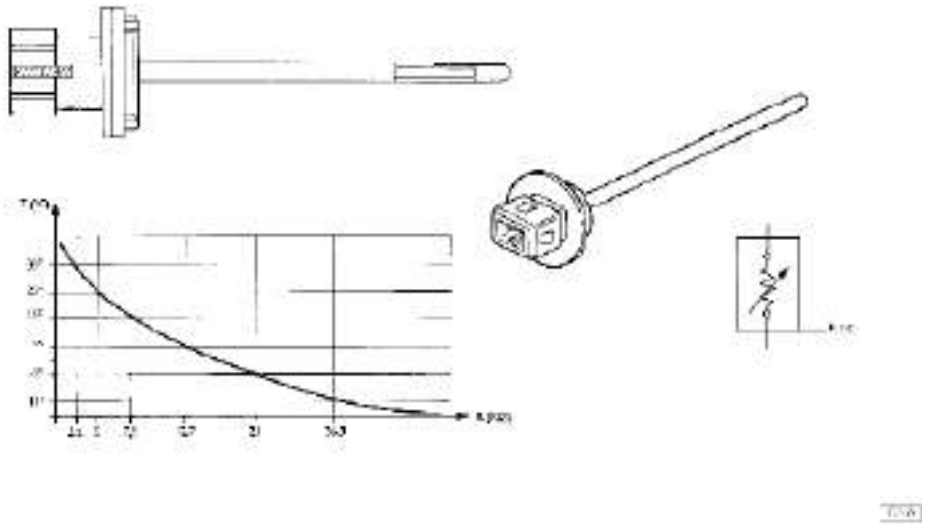

Damper cable group

Depending on their functions, the four cable groups are located in the heater/air conditioning systems inside the cabin. With the same functions, they are used to control the wind directions.

PIN-OUT

Pin	Cable Color	
1	White	+/-24V
2	Violet	+/-24V
3	Blue	0V
4	Orange	0÷5V
5	Green	+ 5V
6	-	Empty

Note: If a ratio motor is replaced, it is MANDATORY to carry out the system RESET by disconnecting and reconnecting vehicle batteries.

Blower

Its motor is located in the heater/air-conditioning unit and used to adjust the speed of double fan blowers.

Figure 47

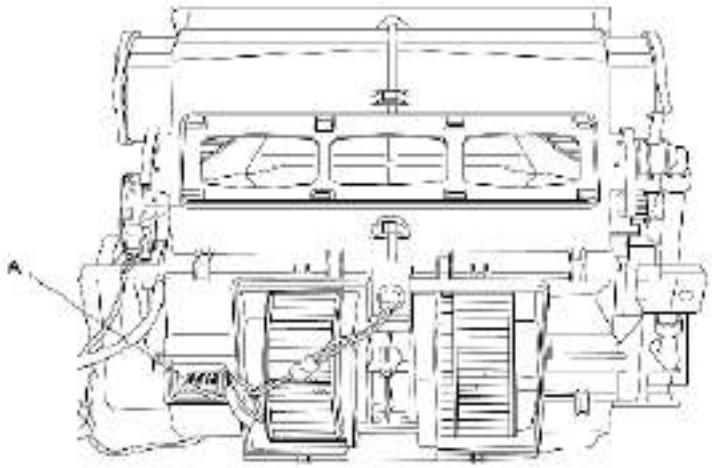

A. Blower

Pin	Cable	Funct.
1	**0000**	Negative direct from the battery
2	**7555**	Center control positive
3	**7551**	Direct positive from battery

Compressor

Figure 48

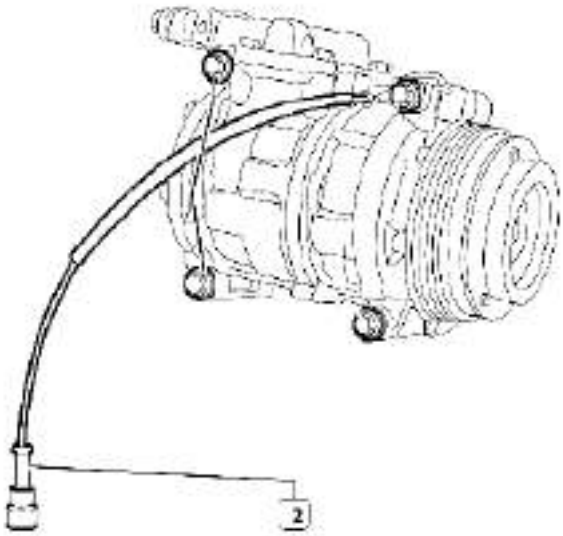

	Parameter
Coolant	R134a
Lubricating oil	ND80
Quantity of coolant	700g
Quantity of oil	200cc.

Condenser and safety pressure switches

The drier filter is integrated into the condenser located on the cooling module front.
The cooling system uses R134a coolant as specified on its cover plate.
The 4-level safety pressure switch unit is installed on the condenser return line.
There are two kinds of safety pressure switches; one only controls low pressure NA and the other can control high pressure NC and low pressure NA.
The NA low pressure switch can maintain the system at a minimum of 2.5 bars (NA).
The two type NC and NA pressure switches keep the system pressure constant from a minimum of 2.5 (for the NA) to a maximum of 25 bars (for the NC).The system is cut off when values are outside this range.

Figure 49

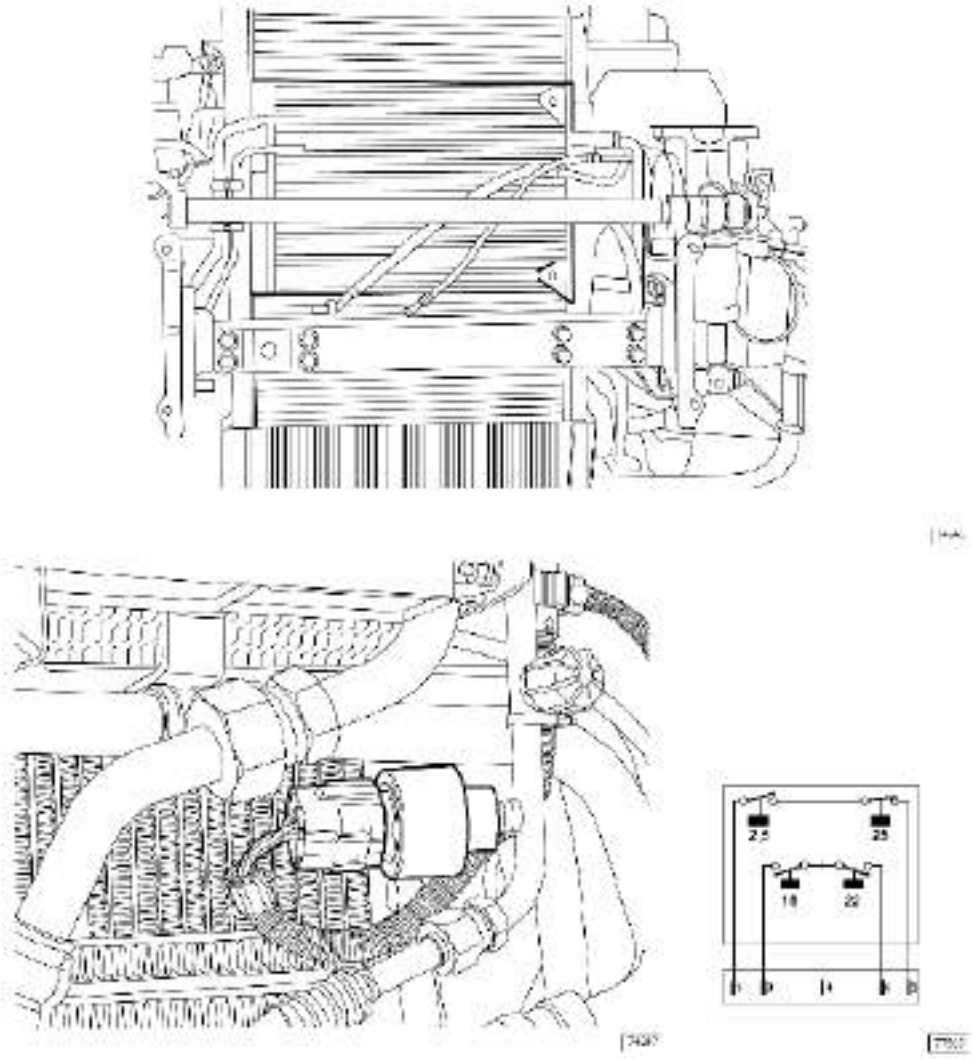

Expansion valve

Its function is to lower liquid pressure from the condenser to a preset value. By circulating inside the evaporator, the coolant can be suctioned as a gas by the compressor.

It thus completes three basic functions:

- Metering
- Modulating
- Monitoring

It is installed in the heater/conditioner unit close to the blower control module.

Figure 50

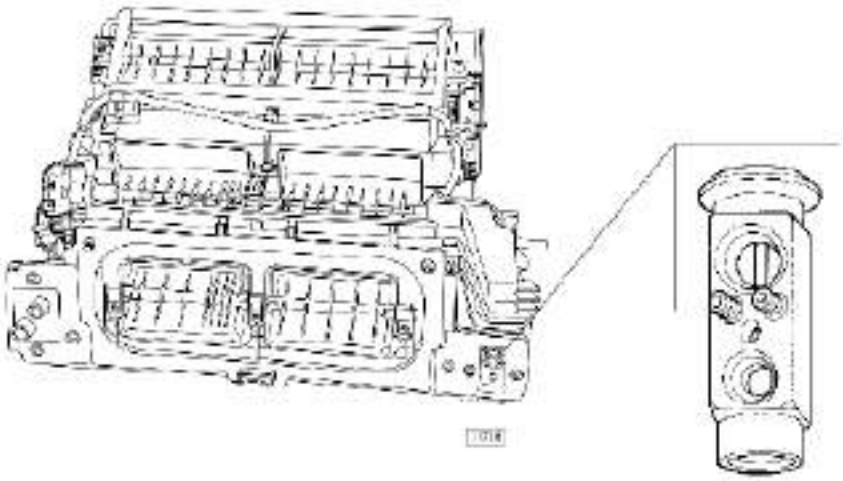

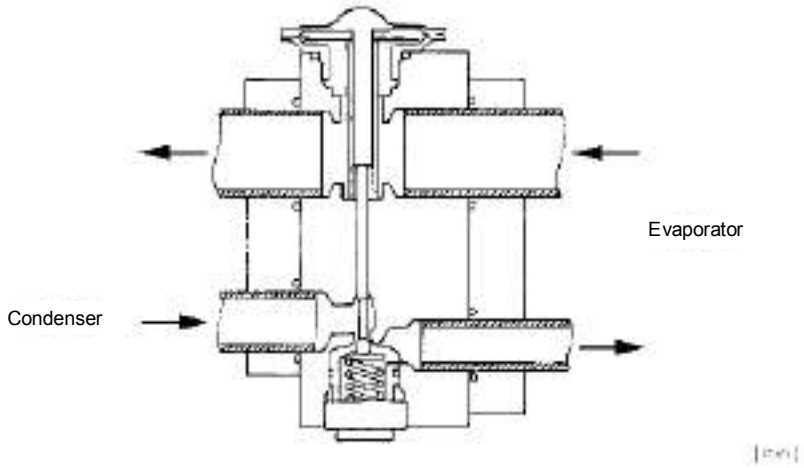

The expansion valve is of the union type and is placed between the condenser and evaporator.

Its tasks are checking and batching the cooling fluid flow in order to obtain the maximum refrigerating power from the system and lowering the cooling liquid pressure (upon exiting the filter) to a pre-established value so that the fluid itself, by then circulating into the evaporator, can be suctioned by the compressor in a completely gaseous state.
In this valve there are two cooling fluid passages:

- The lower one that allows the cooling fluid to pass from condenser (5) to evaporator (2).Along this path, a spring (4) is placed that, suitably calibrated, allows a temperature jump (overheating) such that it can ensure that the cooling fluid, upon entering the evaporator, is in a completely gaseous state. Moreover, there is also a modulating element, in this case a ball (3) housed in the calibrated duct, that checks the cooling fluid flow rate to the evaporator.
- The upper one that allows the cooling fluid to pass from evaporator (1) to compressor (6).Along this path there is a temperature sensor (7) instead. Depending on the temperature upon exiting the evaporator it allows for obtaining a control action on the cooling fluid flow rate through the modulating and overheating checking element (3) of the spring (4).

Figure 51

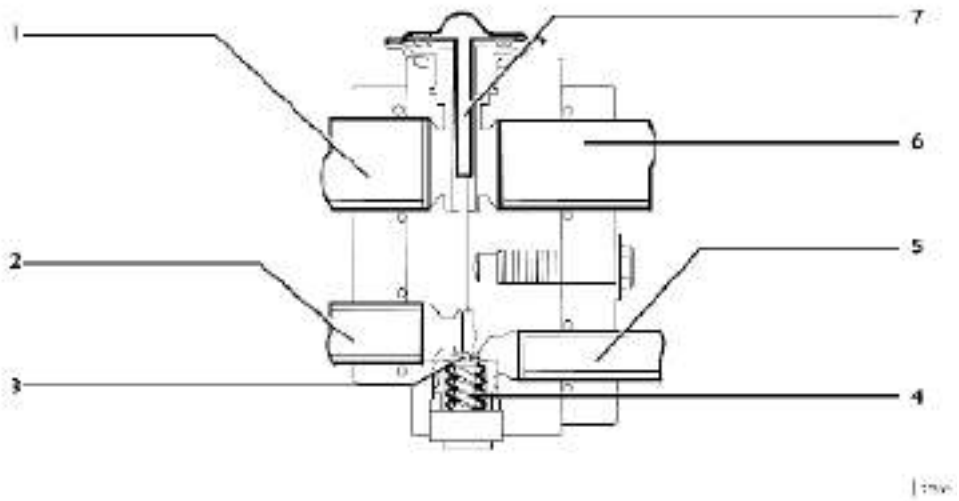

Air conditioning control panel

The air conditioning cooling and warming system checks occur by means of a device with leverages and knobs placed in the lower part of the central dashboard.
The following functions of this system are controlled by knobs:

Figure 52

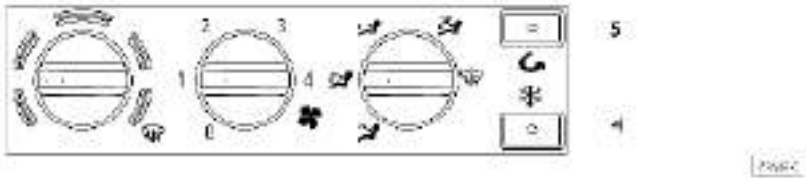

1. Heating intensity conversion knob
2. Fan speed knob
3. Cold and warm air direction knob
4. Compressor control switch
5. Recirculation function switch

CONTROLS DESCRIPTION

Heating intensity conversion knob

Turn the knob to adjust the heating valve opening position, thus changing the hot water capacity circulating in cabin heater.

Internal fan speed

This knob is composed of a multiple-level switch that controls three adjustments for four different motor speeds.

Air direction

By adjusting the cables, this control allows for distributing the air flow to the desired cabin areas.

Recirculation function switch

This button allows, through a specific motor, for the closing of the external door and uses a percentage of 95% internal air and 5% external air.
The motor has no position sensors since it works only under the two all-closed or all-opened conditions.On the button there is a yellow-colored LED that signals its connection.
There is no time limit for this function.

Compressor control switch

This button allows the connection of the air conditioner compressor.
The clutch closure is constrained by safety system pressure switches and by a fixed-calibration evaporator thermostat.
Such thermostat, of the mechanical type, adjusts the temperature inside the evaporator in order to disconnect the compressor clutch upon reaching ~ 2 ℃ and reconnect it at ~ 5.5 ℃
The compressor operation is constrained by the manual connection of at least one fan speed.
A yellow - amber - colored LED is present on the button and signals the compressor connection.

Schematic diagram

Figure 53

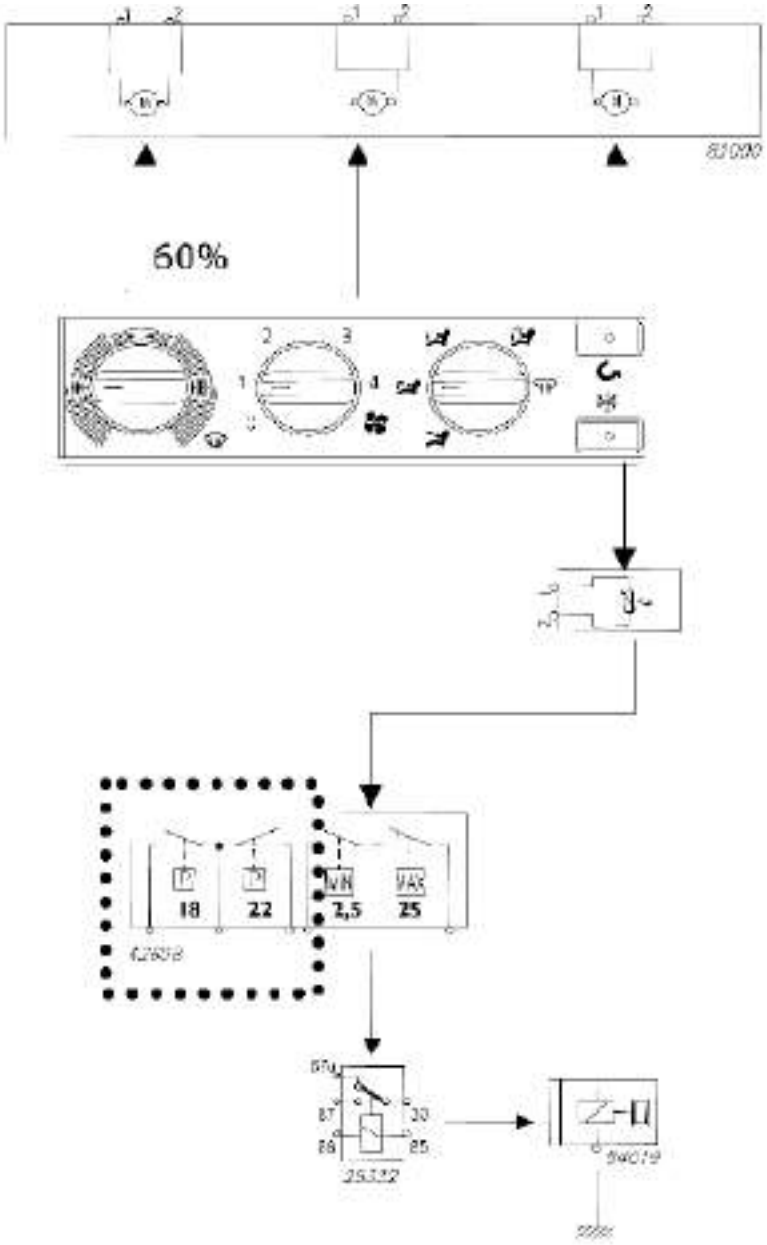

82000. Windshield defroster assembly 42608. Cooling fluid safety pressure switch – 25332. Compressor connection remote control switch – 84019. Compressor

Ratio motor

In manual system, there are **two ratio motors placed** on heater assembly.
They are composed of a motor without potentiometers and have the same electric characteristics.

The ratio motors are used to perform the following functions:

RECIRCULATION (RIC)

Air conditioner fuses remote control switches

Figure 54

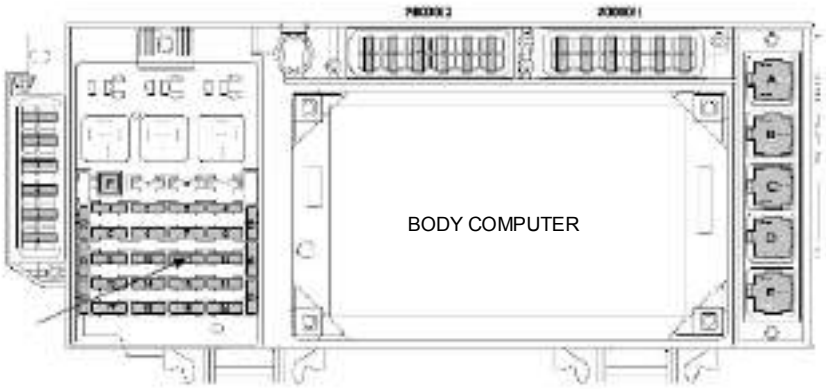

Position	Description	Delivery (A)
1	Air-conditioning system	15
2	Air-conditioning system	15
3	Air-conditioning system	5
4	Supplementary heating	15
5	Supplementary heating	5
6	CM (Cabin Module)	20

Ref	Description	Component code
D	Conditioner remote control switch	25545
E	Water heated remote control switch	25325
G	Conditioner remote control switch	25544
I	Conditioner remote control switch	25874
K	Conditioner remote control switch	25310
M	Conditioner remote control switch	25322
N	Conditioner remote control switch	25332
P	Conditioner remote control switch	25327
R	Conditioner remote control switch	25332

Engine management - EDC System

The electronic center manages the following main functions:

Fuel injection
Accessory functions such as cruise control, speed limiter, PTO and the like
VGT turbocharger (400hp)
Engine brake
Self-diagnosis

It also enables:

Interfacing with other on-board electronic systems
Diagnostic

Fuel dosing

Fuel dosing is calculated based on:
- Accelerator pedal position
- Engine rpm
- Quantity of air admitted.

The result can be corrected based on:
- Water temperature

Or to prevent:
- Noise
- Fumes
- Overloads
- Overheating
- Turbine over rpm

Pressure can be adjusted in case of:
- Engine brake actuation
- Actuation of external devices such as ASR, speed limiter and the like
- Serious defects involving load reduction or engine stop.

After determining the mass of air introduced by measuring its volume and temperature, the center calculates in mg per delivery the corresponding mass of fuel to be injected into the cylinder involved, with gas oil temperature also taken into account.
The mass of fuel thus calculated is first transformed into volume (in mm^3 per delivery) and then in flywheel degrees, that is to say injection duration.

Delivery correction based on water temperature

When cold, the engine encounters greater operating resistance, mechanical friction is high, oil is still very viscous and operation is not optimized yet.
Fuel injected also tends to condense on cold metal surfaces.
Fuel dosing with a cold engine is therefore greater than when hot.

Delivery correction to prevent noise, fumes or overloads

Behaviors that could lead to the defects under review are well known, so the designer has added specific instructions to the center to prevent them.

De-rating

In the event of engine overheating, oil injection will be adjusted via engine coolant to reduce oil delivery proportionally and prevent the temperature from rising too high.

Turbocharger rpm adjustment

Turbine speed is adjusted continuously and corrected by acting on geometry, if so required.

Injection lead electronic control

Injection lead, or the start of fuel delivery expressed in degrees, can differ from one injection to the next and even from one cylinder to another and is calculated similarly to delivery according to engine load, namely, accelerator position, engine rpm and air admitted.
Lead is corrected as required:
- During acceleration
- Depending on the water temperature

And to meet the following requirements:
- Reduced emissions, noise abatement and no overload
- Better vehicle acceleration

High injection lead is set at the start, based on water temperature.
Delivery start feedback is given by the injection solenoid valve impedance variation.

Speed adjuster

The electronic speed adjuster features both regulator characteristics:
- Minimum and maximum
- All rpm levels

It remains stable in ranges where conventional mechanical adjusters become imprecise.

Engine start

Cylinder (1) step and recognition signal synchronization (flywheel and drive shaft sensors) take place at first engine turns. Accelerator pedal signal is ignored at start. Start delivery is set exclusively based on water temperature, via a specific map. The ECU will enable the accelerator pedal to work only when it detects that the flywheel is accelerating, engine speed has been above the start speed as required, and the starter motor is no longer operated.

Cold start

Pre-post reheating is actuated when even one of the three water, air or diesel oil temperature sensors records a temperature below 10 °C. The pre-heat warning light goes on when the ignition key is inserted and stays on for a variable period of time according to temperature, while the intake duct input resistor heats the air, then starts blinking, at which point the engine can be started.
The warning light switches off with the engine revving, while the resistor continues being fed for a variable period of time to complete post-heating. The operation is cancelled to avoid uselessly discharging the batteries if the engine is not started within 20 ÷ 25 seconds with the warning light blinking.The pre-heat curve is also variable based on battery voltage.

批注 [n1]: 此种类似情况，我建议修改为“-”，但是最好能经过客户确认再做修改。文件中还有十多处“÷”，如需要修改，需统一改动。

Hot start

On inserting the ignition key, the warning light goes on for some 2 seconds for a short test and then switches off when all reference temperatures are above 10 °C. The engine can be started at this point.

Run Up

When the ignition key is inserted, the center transfers data stored at previous engine stop to the main memory (Cf. After run), and diagnoses the system.

After Run

At each engine stop with the ignition key, the center is still fed by the main relay for a few seconds to enable the microprocessor to transfer some data from the main volatile memory to a non-volatile, cancelable and rewritable (EEPROM) memory to make it available at the next start (Cf. Run Up).
These data essentially consists of:
- Miscellaneous settings, such as engine idling and the like
- Settings of some components
- Breakdown memory

The process lasts for some seconds, typically from 2 to 7 according to the amount of data to be stored, after which the ECU sends a command to the main relay and makes it disconnect from the battery.

This procedure must never be interrupted by means of cutting the battery cutout to stop the engine or disconnecting the battery 10 seconds later when engine stopped.

In this case, system operation is guaranteed until the fifth improper engine cutout, after which an error is stored in the breakdown memory and the engine operates at lower performance at next start while the EDC warning light stays on.

Repeated procedure interruptions could, in fact, lead to center damage.

Cut-off

This is the delivery cutout function during deceleration, engine braking and the like.

Cylinder Balancing

Individual cylinder balancing contributes to increasing comfort and operability.
This function enables individual personalized fuel delivery control and delivery start for each cylinder, and even different measures for each cylinder, to compensate for injector hydraulic tolerances.
Delivery flow differences between the various injectors cannot be assessed directly by the center; this information is supplied by entering the code for each injector via the Modus.

Synchronization search

The center can recognize which cylinder to inject fuel into even in the absence of a signal from the camshaft sensor.
If this occurs when the engine is already started, a combustion sequence is already acquired, so the center continues with the sequence it is already synchronized; if it occurs with the engine stopped, the center only activates one solenoid valve. Injection occurs inside the cylinder within 2 shaft revs at the most so the center is only required to synchronize the firing sequence and start the engine.

The EDC central unit is mounted directly on the engine to cool itself by fuel and to minimize engine-induced vibration by elastic pads. Furthermore, it also reduces the number of connections, the length of cables connecting with the injectors and disturbance to the transmitting of signals.

It is connected to the vehicle via two 35-pole connectors:
“A” connector for the engine components,
“B” connector for cabin parts.

An internal environment pressure sensor is provided for further improved injection system management.

The center is provided with an advanced self-diagnosis system capable of identifying and storing any intermittent environmental anomaly to the system during vehicle operation to ensure the most correct and efficient repair.

F2C components on engine

Figure 55

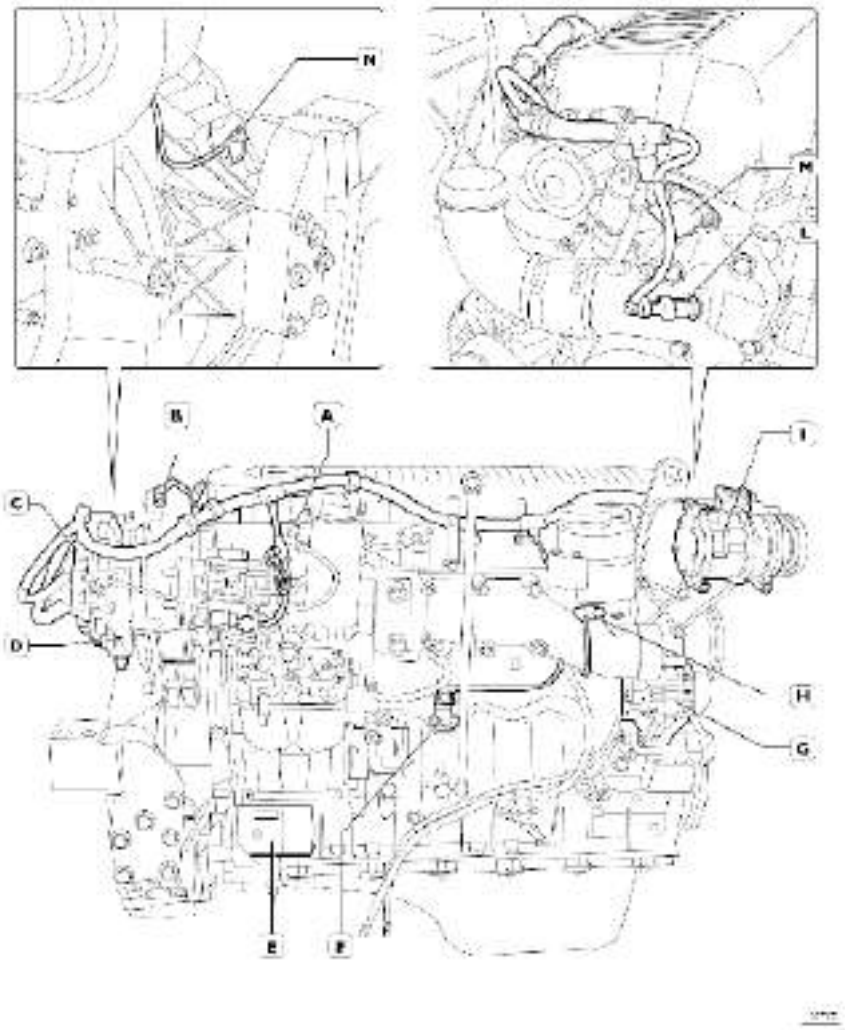

A. Fuel temperature sensor B. Camshaft sensor C. ECU D. Fuel pressure regulator
E. Starter F. Oil pressure/temperature sensor G. Alternator H. Air feed temperature/pressure sensor
I. Air conditioner compressor L. Water temperature sensor M. Cylinder head wire harness connector
N. Crankshaft sensor

Engine wire harness (for all engines except F2CE0681A*...)

Figure 56

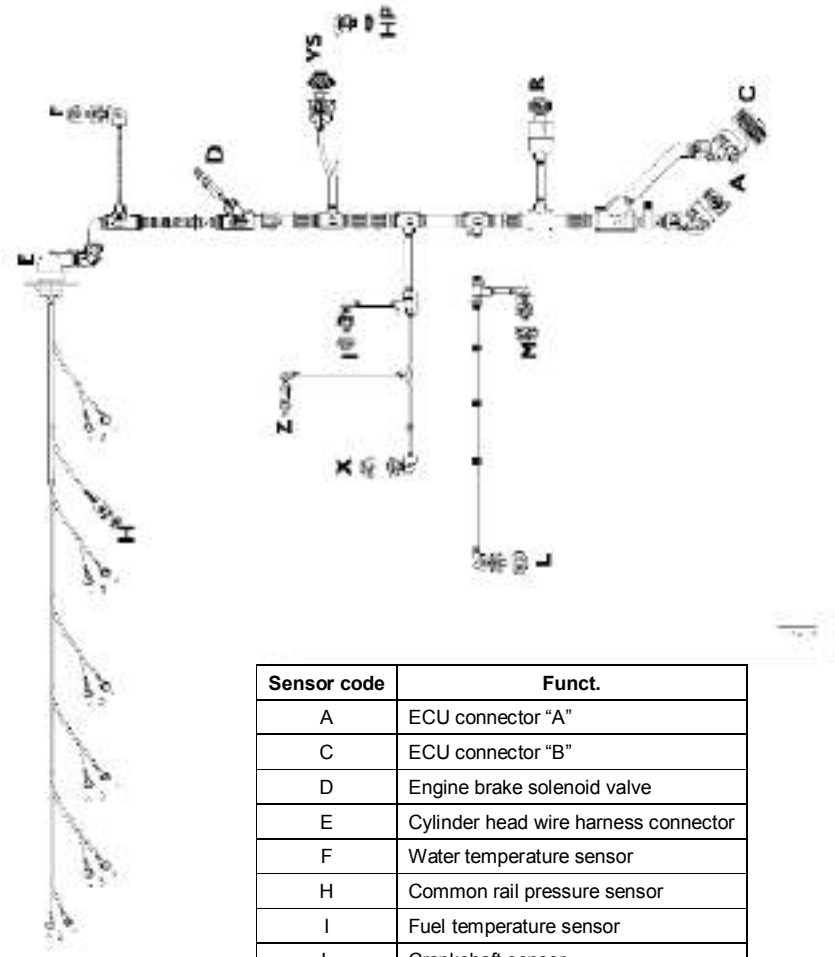

Sensor code	Funct.
A	ECU connector “A”
C	ECU connector “B”
D	Engine brake solenoid valve
E	Cylinder head wire harness connector
F	Water temperature sensor
H	Common rail pressure sensor
I	Fuel temperature sensor
L	Crankshaft sensor
M	Camshaft sensor
X	Fuel pressure regulator
HP	Air feed temperature/pressure sensor
VS	Oil pressure/temperature sensor
Z	Fuel filter clogged sensor

Engine wire harness (only for engine F2CE0681A*...)

Figure 57

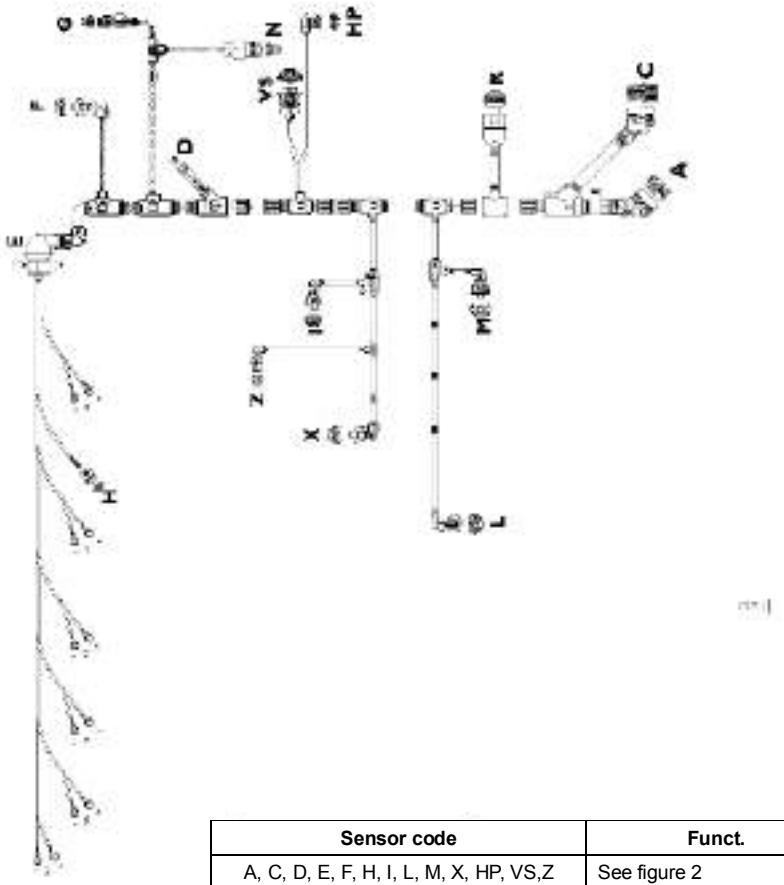

Sensor code	Funct.
A, C, D, E, F, H, I, L, M, X, HP, VS,Z	See figure 2
G	VGT solenoid valve
N	VGT speed sensor

ECU pin diagram – connector A and C (for all engines except F2CE0681A*...)

Figure 58

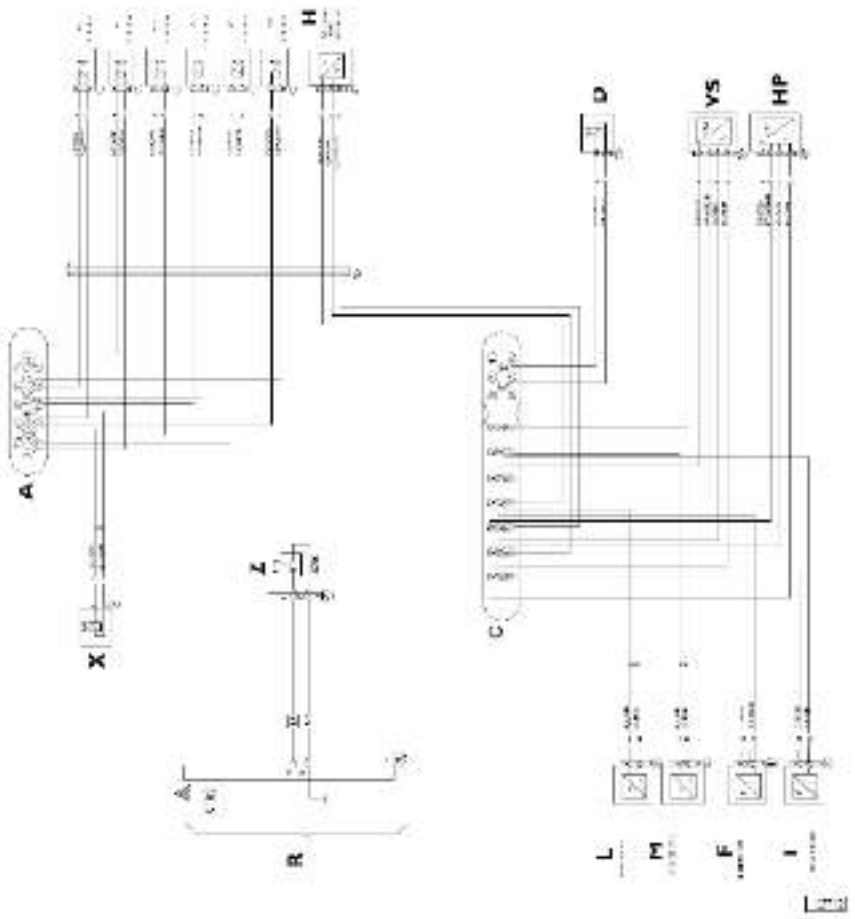

Installed on vehicle
R Connect the chassis circuit
Z Fuel filter clogged sensor

ECU pin diagram – connector A and C (for engine F2CE0681A*...)

Figure 59

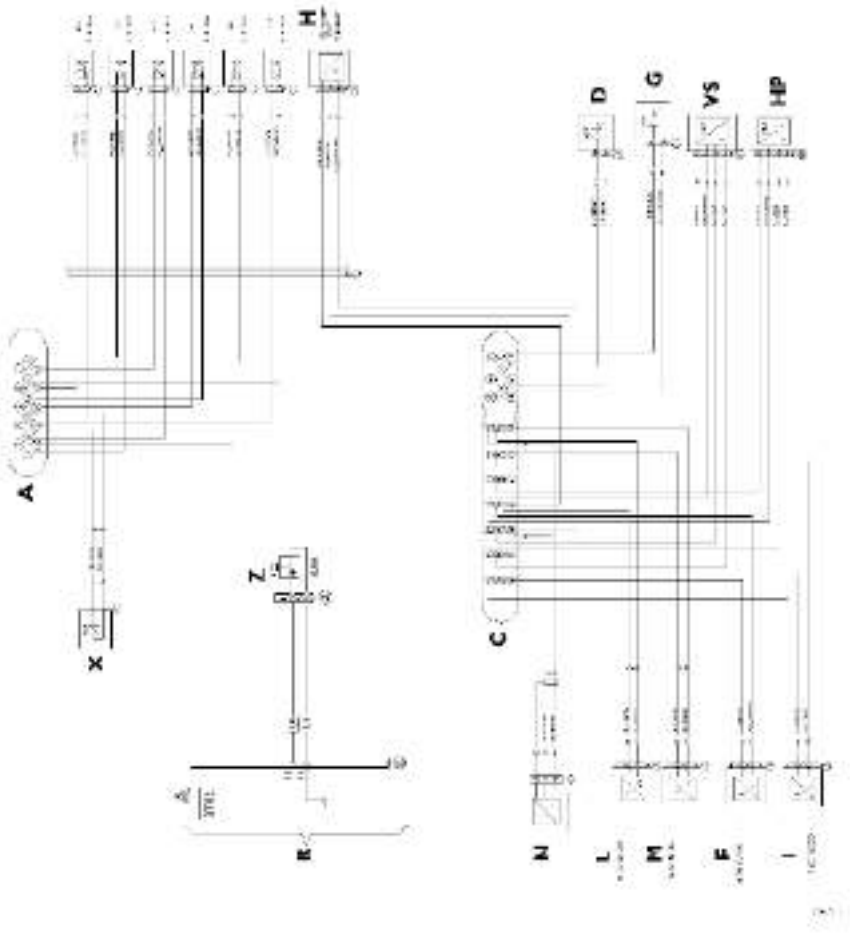

Installed on vehicle
R Connect the chassis circuit
Z Fuel filter clogged sensor

ECU pin diagram – chassis connector B

Figure 60

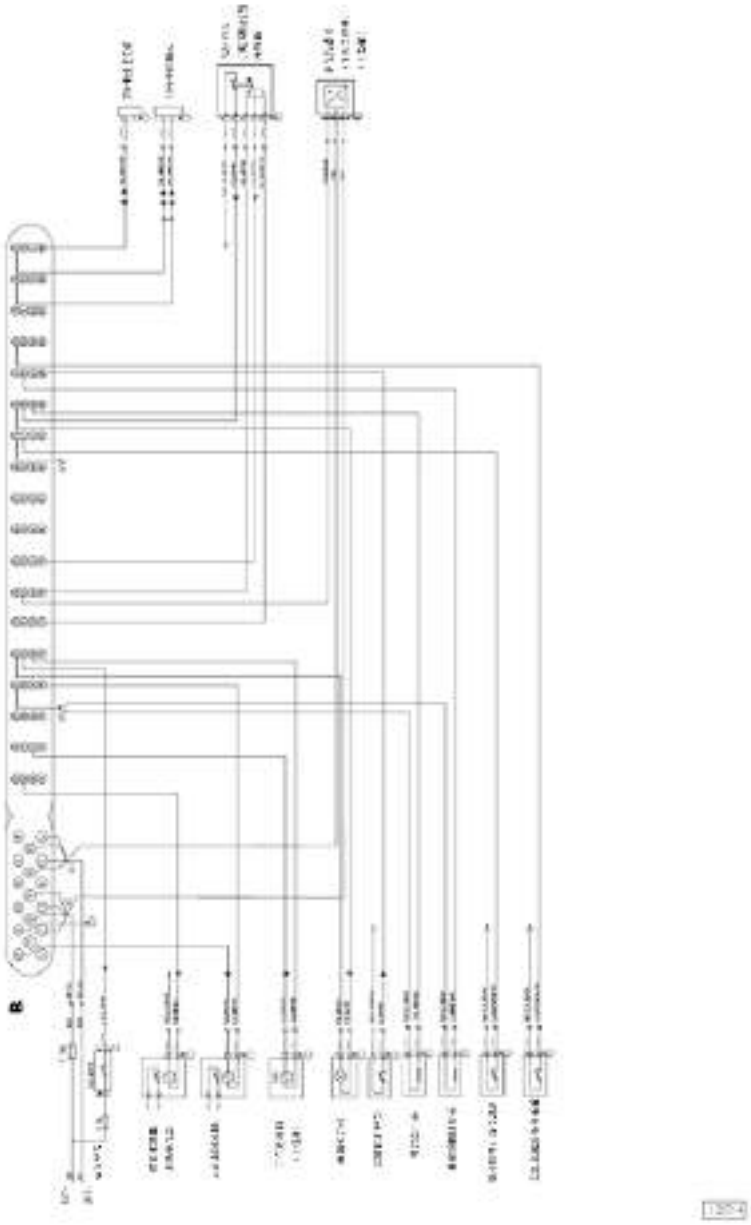

EDC system operating diagram

Figure 61

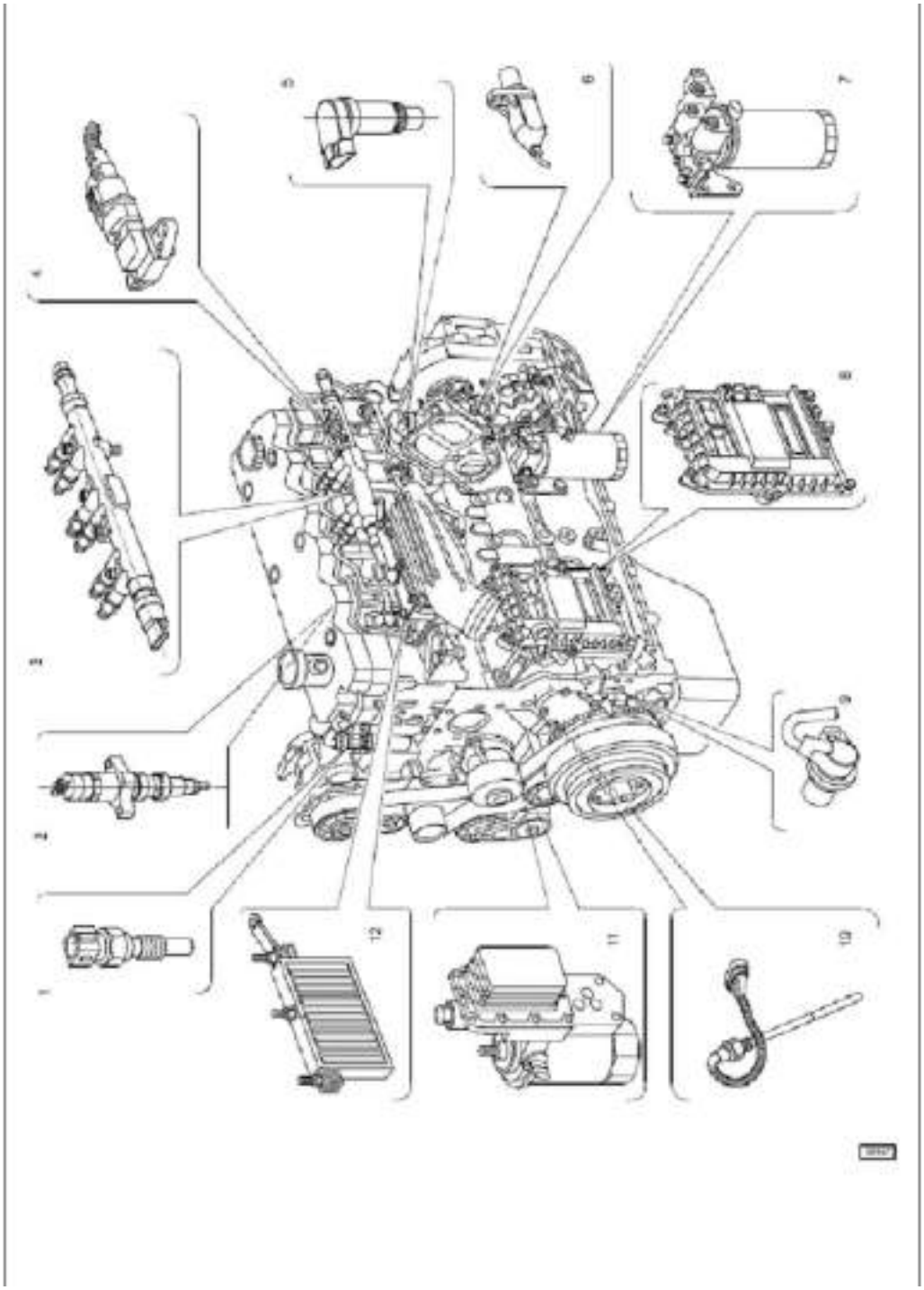

EDC70 Fuel Electronic Control System

Figure 62

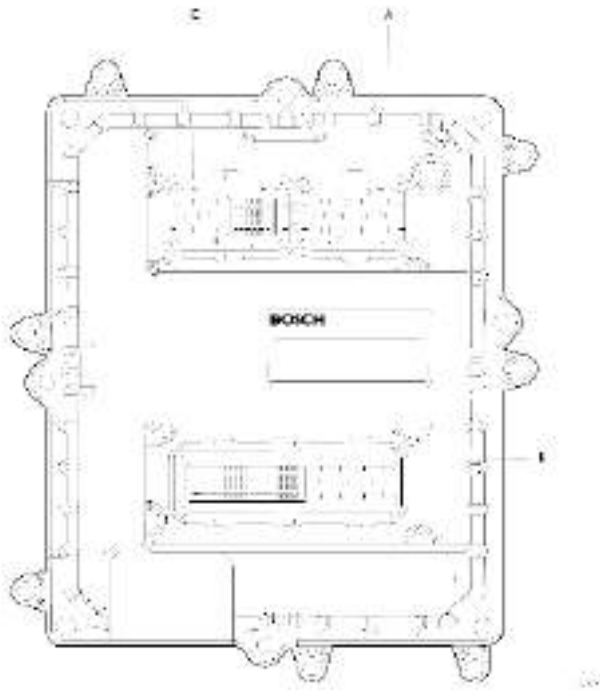

"A", "B" and "C" interfaces for engine EDC

Connector A interface

Pole	Funct.
1	Cylinder 5 injector solenoid valve
2	Cylinder 6 injector solenoid valve
3	Cylinder 4 injector solenoid valve
4	Cylinder 1 injector solenoid valve
5	Cylinder 3 injector solenoid valve
6	Cylinder 2 injector solenoid valve
7	-
8	-
9	High pressure oil pump
10	High pressure oil pump
11	Cylinder 2 injector solenoid valve
12	Cylinder 3 injector solenoid valve
13	Cylinder 1 injector solenoid valve
14	Cylinder 4 injector solenoid valve
15	Cylinder 6 injector solenoid valve
16	Cylinder 5 injector solenoid valve

Figure 63

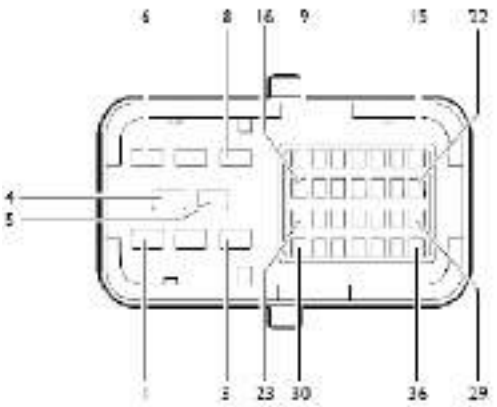

Connector C interface

Pole	Funct.	Wire harness section
1	Variable section turbocharger solenoid valve (for engine F2CE06881A*...)	1.0
2	-	-
3	Variable section turbocharger solenoid valve (for engine F2CE06881A*...)	1.0
4	Engine brake solenoid valve	1.0
5	Engine brake solenoid valve	1.0
6÷8	-	-
9	Camshaft sensor (signal)	0.5
10	Camshaft sensor (ground)	0.5
11		-
12	Common rail fuel pressure sensor (ground)	0.5
13	Common rail fuel pressure sensor (power supply)	0.5
14	Common rail fuel pressure sensor (signal)	0.5
15	Water temperature sensor (signal)	0.5
16	-	-
17	Fuel temperature sensor	0.5
18	-	-
19	Crankshaft sensor (ground)	0.5
20	Turbocharger speed sensor (ground) (only for engine F2CE06881A*...)	0.5
21÷22	-	-
23	Crankshaft sensor (signal)	0.5
24	Oil temperature/pressure sensor (ground)	0.5
25	Air feed pressure/temperature sensor (ground)	0.5
26	Water temperature sensor (ground)	0.5

27	**Oil pressure/temperature sensor (pressure signal)**	**0.5**
28	**Oil pressure/temperature sensor (temperature signal)**	**0.5**
29	**-**	**-**
30	**Turbocharger speed sensor (signal) (only for engine F2CE06881A*...)**	**0.5**
31	**-**	**-**
32	**Oil temperature/pressure sensor (power supply)**	**0.5**
33	**Air feed temperature/pressure sensor (power supply)**	**0.5**
34	**Air feed temperature/pressure sensor (pressure signal)**	**0.5**
35	**Fuel temperature sensor**	**0.5**
36	**Air feed temperature/pressure sensor (temperature signal)**	**0.5**

Figure 64

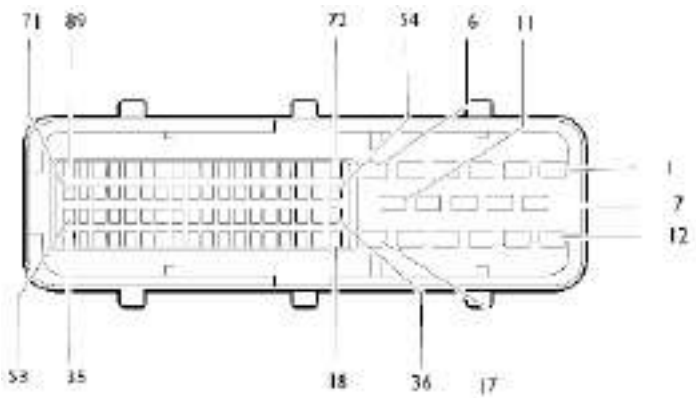

Pole	Funct.	Wire harness section
1	-	-
2	Battery positive	2.5
3	Battery positive	2.5
4	-	-
5	Battery negative	2.5
6	Battery negative	2.5
7	-	-
8	Battery positive	2.5
9	Battery positive	2.5
10	Battery negative	2.5
11	Battery negative	2.5
12	Heater grille (signal)	0.5
13	+15 V	2.5
14÷20	-	-
21	Switch voltage	0.5
22	Diagnostic warning light	0.5
23÷28	-	-
29	Digital data (Ground wire)	0.5
30	Diagnostic warning light	0.5
31	-	-
32	Engine starting button negative	0.5
33	-	-
34	CAN 2 line interface input signal (low)	0.5
35	CAN 2 line interface input signal (high)	0.5
36	Fuel filter heater switch negative	0.5
37÷39	-	-
40	Ignition switch (+15V)	0.5
41	Primary brake switch positive	0.5

42	**Sensor negative (this sensor is used to detect the amount of water in prefilter)**	**0.5**
43÷46	**-**	**-**
47	**Engine stop button negative**	**0.5**
48	**Accelerator pedal idling switch negative**	**0.5**
49	**Brake switch positive (space signal)**	**0.5**
50÷54	**-**	**-**

Pole	Funct.	Wire harness section
55	Engine brake exhausting solenoid valve positive	0.75
56÷57	-	-
58	Engine brake exhausting solenoid valve (ground)	0.75
59÷65	-	-
66	Clutch switch positive	0.5
67÷74	-	-
75	Heater grille (power supply)	0.5

Injector

It mainly consists of three components as follows:

A) Solenoid valve
B) Pump unit
C) Nozzle

These three parts CANNOT be replaced individually and are NOT subject to overhaul.

The pump is actuated mechanically at each cycle by a rocker arm and compresses the fuel contained in the pressure chamber.

Figure 65

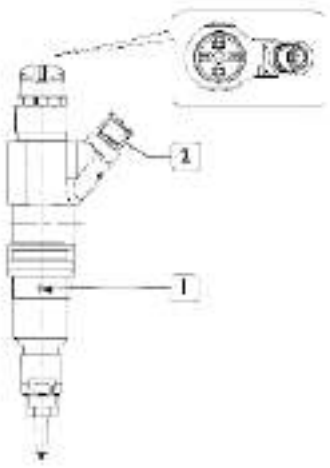

The electronic injector is of a solenoid valve.

It is connected to interface A on ECU.

The resistance of the electronic injector coil is 0.56 – 0.57 ohm.

The electronic injector is divided into two parts:

- **Actuator – injector which includes**

Injection beginning

The cotter will move upwards after coil energizing.

Fuel returned from the control chamber will

Injection end

The cotter will return to the closed position after coil de-energized. The needle will return to the closed position once the pressure is balanced, then stops the injection.

Engine coolant temperature sensor (85153)

This N.T.C. type sensor is located on the water outlet sump on the engine head's left and measures coolant temperature for the various operations, with a hot or cold engine and identifies injection enrichment requirements for a cold engine or fuel reduction requirements for a hot engine.

The coolant temperature signal is used for a display on the Cluster and to control the fan.

It is connected to electronic center pins A5/A22

Sensor behavior as a function of temperature:

-10℃	8.10÷10.77 kOhm
+20℃	2.28÷2.72 kOhm
+80℃	0.29÷0.364 kOhm

At 60 to 90℃, voltage at A5 and A22 ranges from 0.6 to 2.4V.

Figure 66

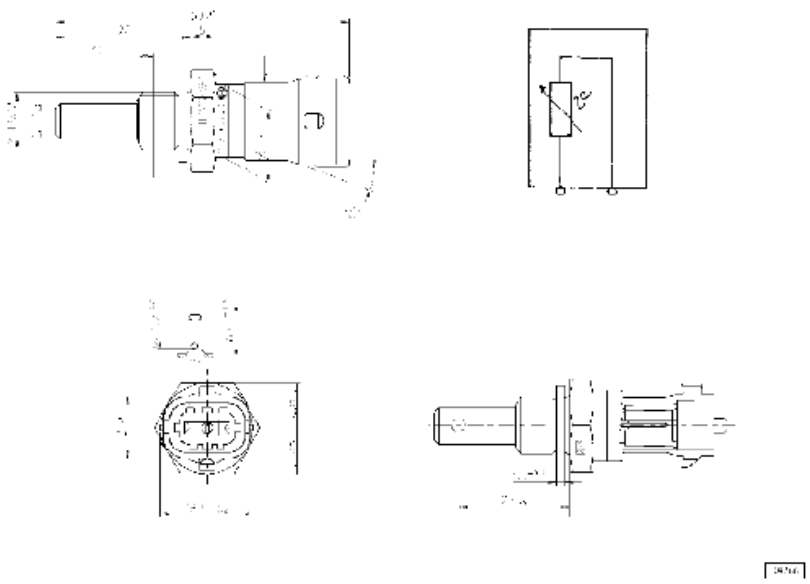

Connectors	Funct.	Cable Color
2	To EDC center pin A5	–
3	To EDC center pin A22	–

Fuel temperature sensor

Maximum torque: This N.T.C. type sensor, located on the fuel filter on the engine's left side detects fuel temperature and enables the electronic center to measure fuel density and volume for delivery correction.

Figure 67

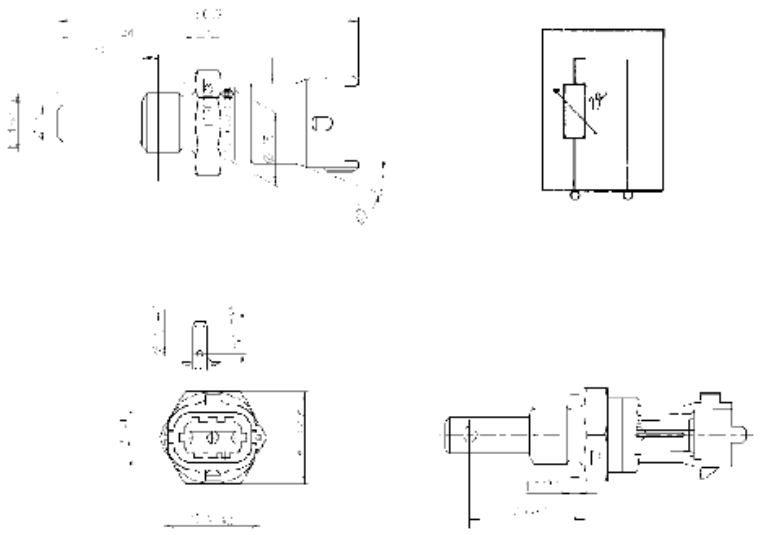

Connectors	Funct.	Cable Color
2	To EDC center pin A6	–
3	To EDC center pin A11	–

Air feed temperature/pressure sensor

Features

Operating pressure range	50 ÷ 400 kPa
Maximum torque	10 Nm

This pressure strain gauge transducer, located on the intake to the intake manifold downstream from the intercooler on the engine's left side, measures air overfeed pressure to the intake manifold.

This measurement, together with the air temperature sensor finding, enables the electronic center to exactly define the amount of air admitted to the cylinders so as to pilot injectors by adjusting fuel supply, limit noxious emissions and improve fuel consumption and engine performance.

The sensor has an internal temperature correction electronic circuit to optimize pressure measurement as a function of admitted air temperature.

Figure 68

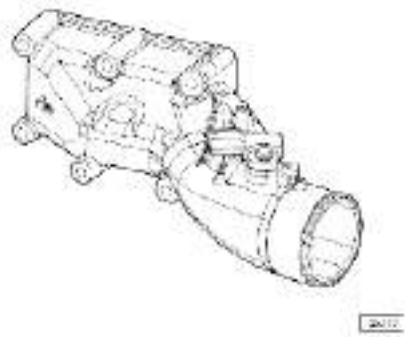

Figure 69

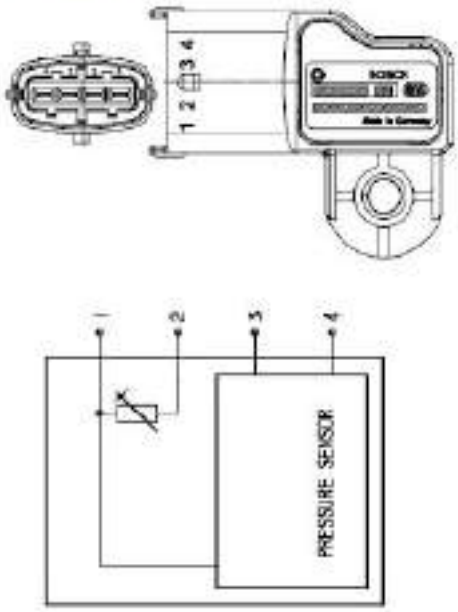

No.	Description	ECU pole
1	Ground	25 C
2	Temperature signal	36 C
3	+5	33 C
4	Pressure signal	34 C

Oil pressure/temperature sensor (42030 / 47032)

It is same as the air feed pressure/temperature sensor and can be replaced by a single sensor 47032/42030.

The Oil pressure/temperature sensor assembled on the cylinder horizontally is used to measure the oil temperature and pressure.

The measured signal will be transmitted to ECU in order to control the indicators/gauges (low pressure warning light/gauge) on the instrument panel.

Pole (EDC) 24/C - 32/C power supply

Pole (EDC) 27/C temperature

Pole (EDC) 28/C pressure

The oil temperature signal is only for ECU.

Figure 70

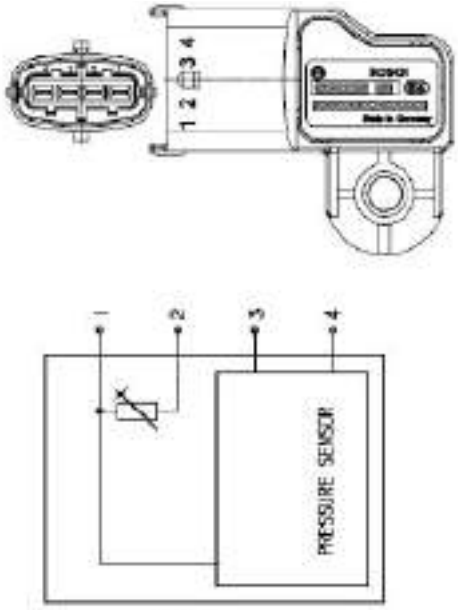

No.	Description	ECU pole	
1	Ground	24 C	
2	Temperature signal	27 C	
3	+5	32 C	
4	Pressure signal	28 C	

Common rail pressure sensor

Assembled on one end of common rail pipe, this sensor is used to measure the actual fuel pressure in order to determine the injection pressure.

The injection pressure is used for pressure detection and injection duration determination.

The sensor supply voltage is +5V.

The sensor is connected to poles 12 C-13 C-14 C.

Figure 71

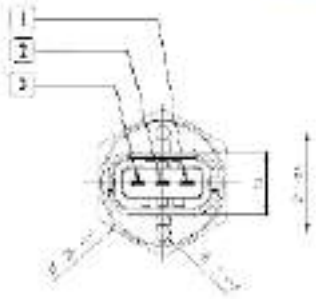

Figure 72

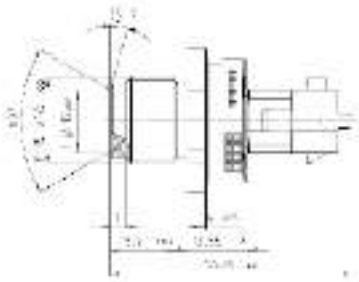

No.	Description	Pole electronic control module
1	Power supply	12 C
2	Ground	13 C
3	Pressure signal	14 C

Brake exhausting solenoid valve

Figure 73

It is a numerical control type solenoid valve.

Oil will flow into the engine brake hydraulic cylinder according to the opening indications from ECU to the solenoid valve.

Meanwhile, the ECU will start VGT (if included).

The solenoid valve is connected to ECU poles 4C -5C.

Coil resistance is about 39 to 44 Ω.

Crankshaft signal sensor (48035)

Features

Vendor **BOSCH**

Torque **8±2 Nm**

Resistance **880÷920 Ω**

The electronic center uses this signal to detect the various engine ratings and pilot the electronic rev counter.

The rev counter does not operate in the absence el generates signals obtained from the

Figure 74

Figure 75

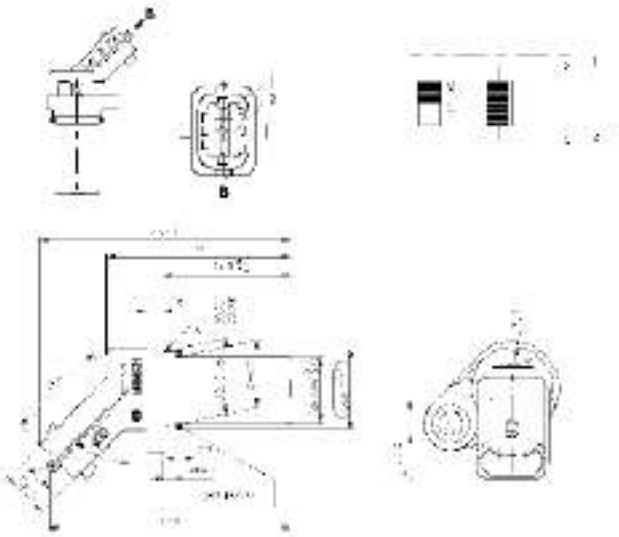

Connectors	Funct.	Cable Color
1	To EDC center pin A1	–
2	To EDC center pin A13	–
3	Shields	–

Camshaft pulse transmitter (48042)

Features

Vendor	**BOSCH**
Torque	**8±2 Nm**
Resistance	**880÷920 Ω**

This induction type sensor located on the camshaft and generates signals obtained from the magnetic flow lines that go through the 6-plus-1 phase teeth of a sound wheel mounted on the shaft

Figure 76

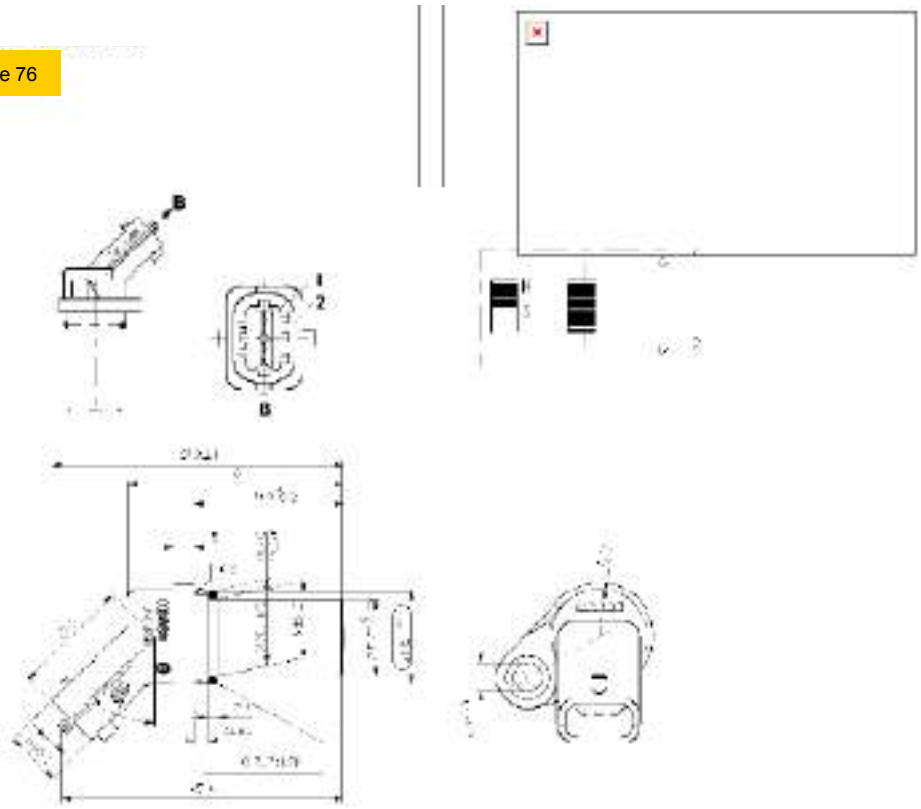

Description	Wire harness Color
To EDC center pole 9 (sensor connector “C”)	W
To EDC center pole 10 (sensor connector “C”)	R

Air-inlet heating resistor grille

Figure 77

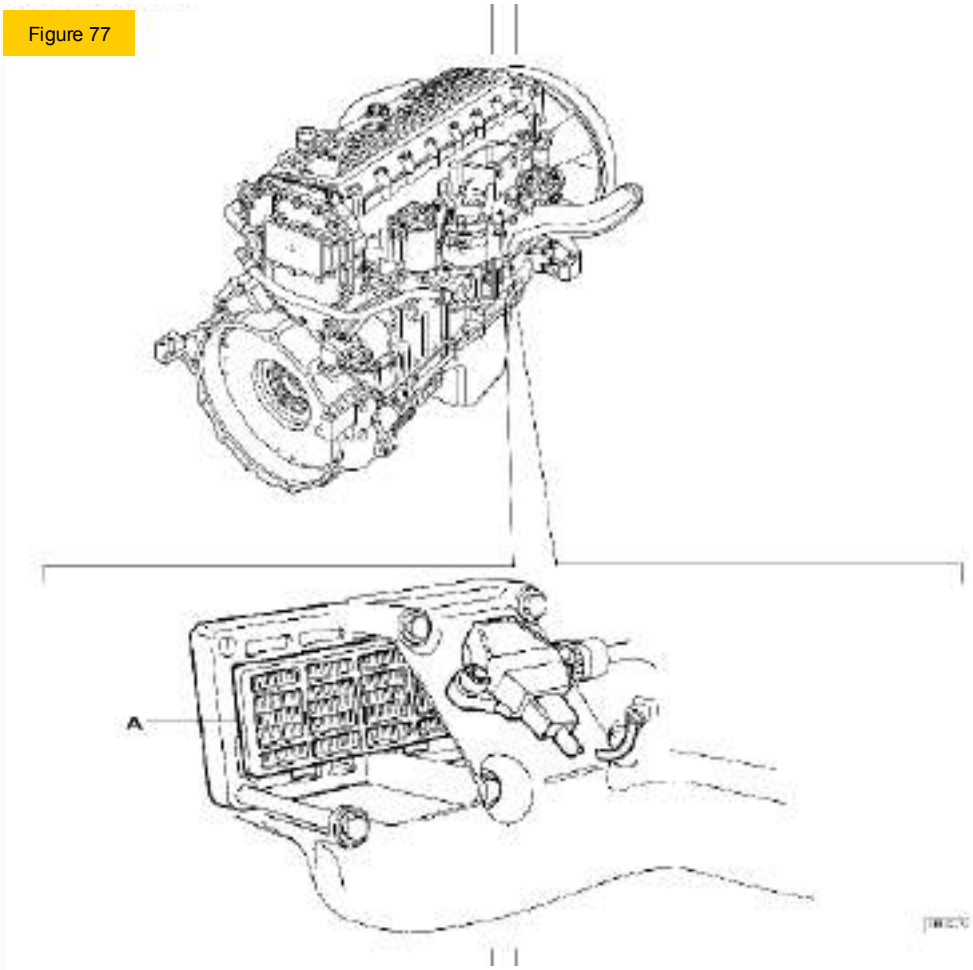

A. Air-inlet heating resistor grille

Located between cylinder head and air-inlet duct, the resistor is used to heat air during air intake preheating.

By inserting the key switch, when even one of the water, air or gas oil temperature sensors records less than 10° C, the electronic center activates the air-inlet heating grille function and switches on the warning light on the cab instrument panel for a variable period according to temperature, after which the light starts blinking to inform the operator that the engine can be started.

The warning light goes off after the engine starts but the resistor continues being supplied for a variable period of time to complete heating.

The operation is cancelled to prevent uselessly discharging the battery if the engine is not started within 20/25 seconds with the warning light blinking.

When reference temperature is above 10°C, actuating the ignition key makes the warning light go on for some 2 seconds to complete the test and then turns it of to indicate the engine can be started.

Turbocharger with VGT

Figure 78

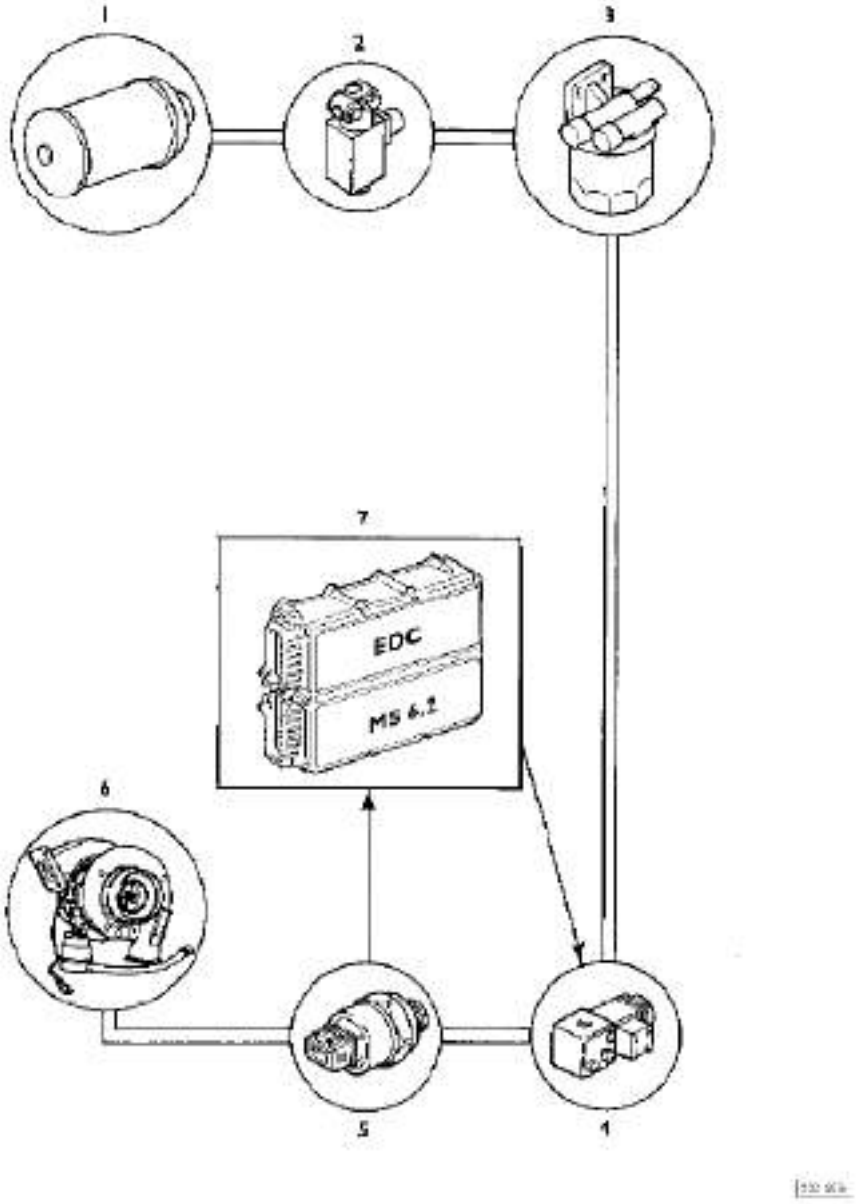

1. Air reservoir – 2. Solenoid valve switch – 3. Air filter – 4. VGT solenoid valve – 5. Actuator position sensor – 6. Turbocharger – 7. EDC

VGT turbocharger (400hp)

Figure 79

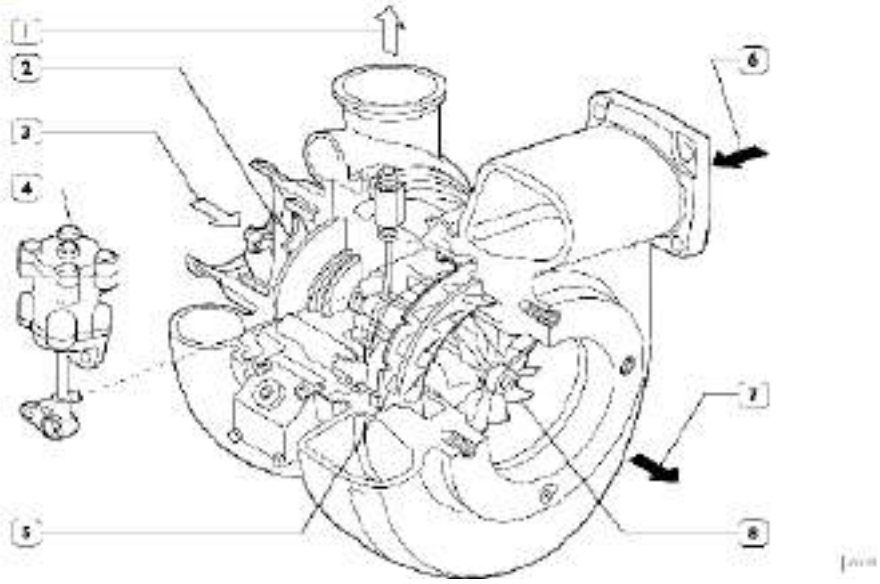

1. Air outlet – 2. Compressor – 3 Air inlet – 4. Actuator valve – 5. Section adjustment ring

Figure 80

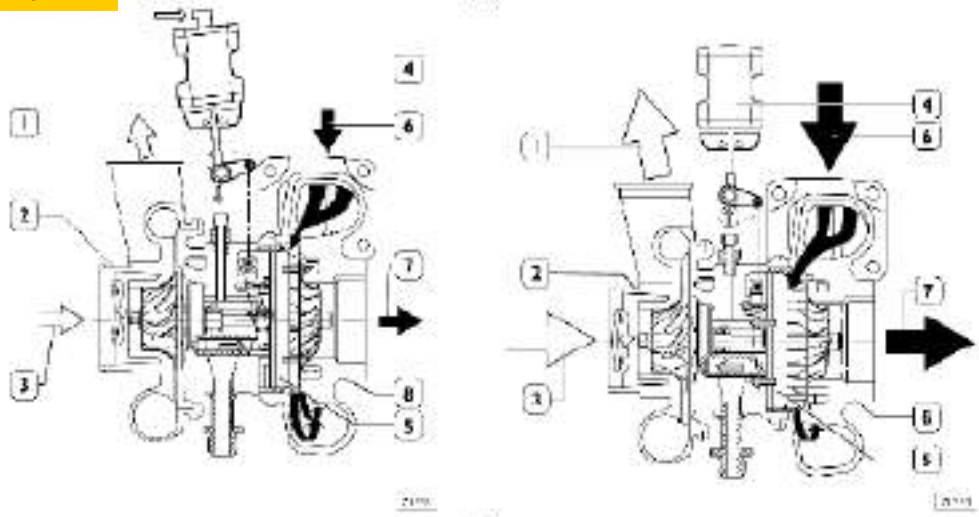

MINIMUM FLOW **MAXIMUM FLOW**

1. Air supplied to air-inlet manifold – 2. Compressor – 3. Air-inlet – 4. Actuator valve – 5.

Working principle

Figure 81

Exhaust gas section with engine under load

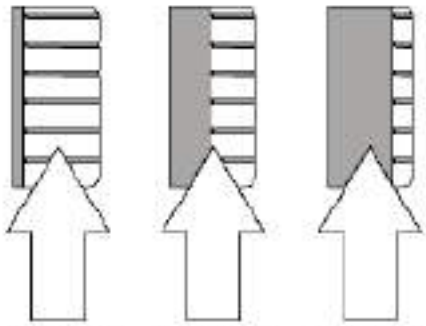

High engine rpm Average engine rpm Low engine rpm

The VGT variable geometry turbo compressor consists of a centrifugal compressor and a turbine with a mobile device that adjusts the rate of exhaust gas to the turbine by changing the exhaust gas passage cross section.

This solution enables keeping gas and turbine rates high even when the engine is operating at low rpm.

Making gasses pass through a reduced cross section increases their rate so the turbine rotates faster.

Movement of the section adjustment ring is obtained by means of a mechanism controlled by a compressed air actuator, which is controlled by a proportional solenoid valve.

The device is fully closed at low rpm, while at high engine rpm, the electronic control system increases the cross section to enable incoming gasses to flow without increasing their speed.

A secondary air filter thoroidal chamber is cast into the oil radiator housing.

Engine components (VGT)

Figure 82

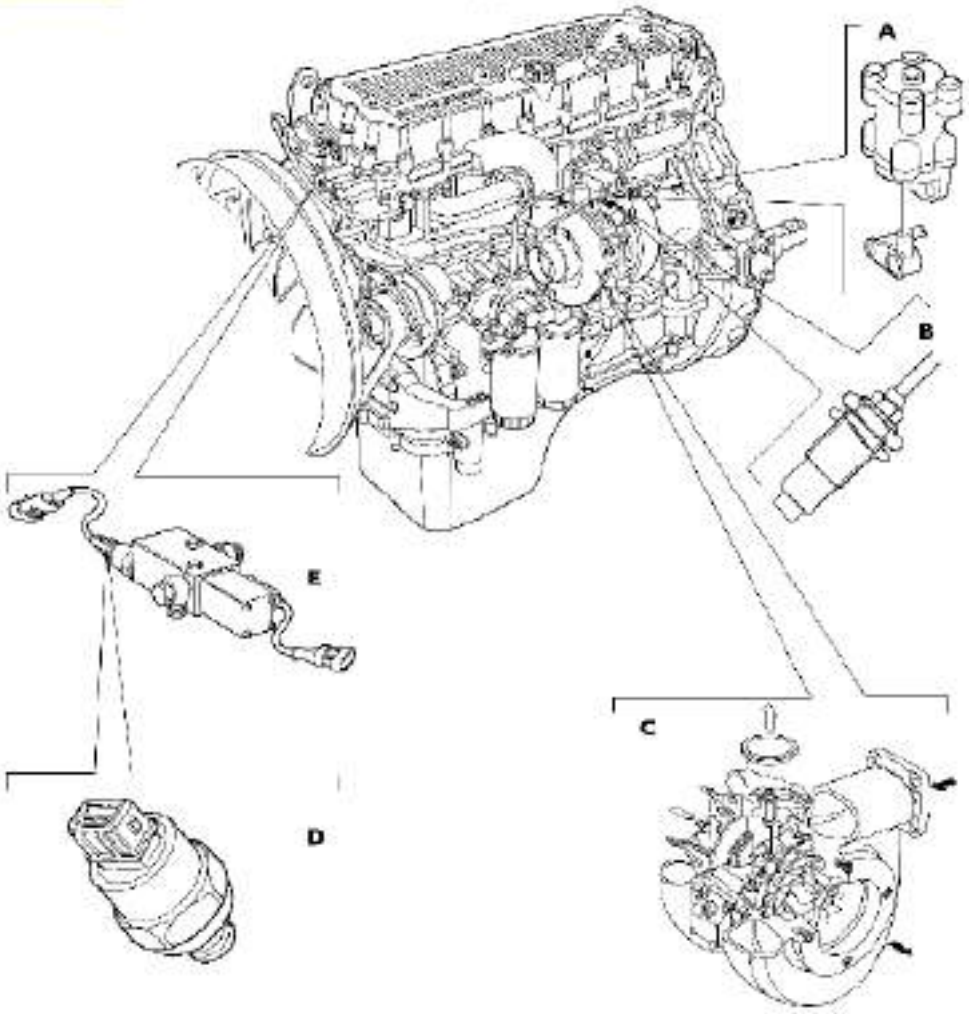

A. Actuator valve – B. Turbocharger rpm sensor – C. Turbo compressor – D. VGT actuator position sensor – E. VGT actuator control solenoid valve

Actuator

Figure 83

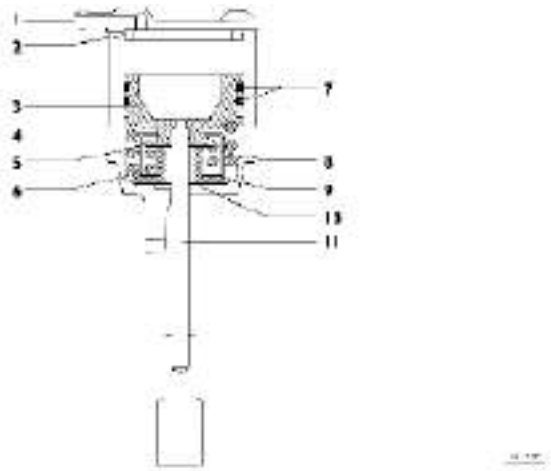

1. Air-inlet – 2. Washers – 3. Pistons – 4. External spring – 5. Internal spring control tab – 6. Internal spring – 7. O-rings – 8. Spring seat – 9. Travel end – 10. Dust cover – 11. Control lever

Working principle

The actuator piston connected to the control rod is piloted through the compressed air admitted from air intake 1 on the top of the actuator.
Modulating air pressure varies piston and turbine control rod movement.
During its movement, the piston progressively compresses external spring 4 until the piston base reaches internal spring 6 control disc 5.
By further increasing pressure, the piston compresses the internal spring through disc 5 until run end, which is reached when disc 5 interferes with lower run end 10.
Use of the two springs enables the ratio between pressure and piston travel to change. About 85% of rod travel is contrasted by the external spring, the remaining 15% is contrasted by the internal one.

Solenoid valve for VGT control

Figure 84

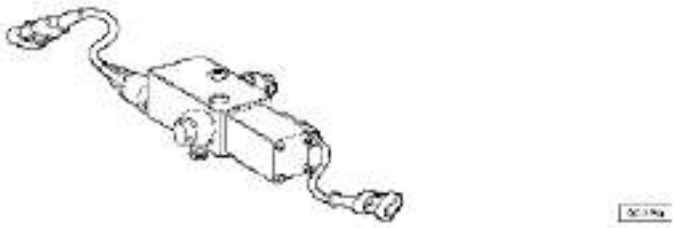

This is an N.C. type proportional solenoid valve mounted on the engine front, behind the fan.
Through a PWM signal, the electronic center pilots this solenoid valve to adjust turbine actuator valve feed pressure; actuator valve position changes modify the exhaust gas intake cross section on the fan blades and thus its speed.
The VGT solenoid valve is between the electronic center pins A18/A31.
Coil resistance is ~ 20 ÷ 30 Ohm.

Turbocharger rpm sensor (48043)

This is an inductive sensor positioned on the impeller shaft.
It generates signals obtained from the magnetic flow lines, which close through a notch obtained on the shaft itself.
The signal generated by this sensor is used by the electronic control unit to verify that the turbine revs number does not exceed the maximum value.
To control the revs number, the control unit acts on variable geometry.
If the revs number keeps on increasing until it reaches excessive r.p.m. values, the electronic control unit will detect an anomaly.
The gap of this sensor CANNOT BE ADJUSTED.
It is connected to electronic control unit pins A7 / A16.
The sensor resistance value is 400 Ohm.

Figure 85

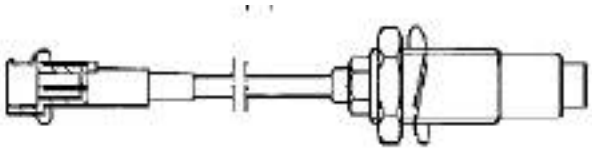

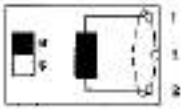

Wiring diagram

VGT actuator position sensor (85158)

Figure 86

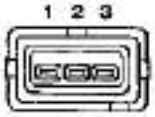

Perspective view

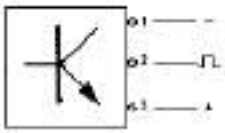

Connection

This is a pressure sensor, located on the VGT control solenoid valve outlet duct, which measures actuator supply pressure. The electronic center uses this signal to detect VGT position and change it if so required.
It is connected to electronic center pins A15/A17/A19.

ABS — Anti-Lock Brake System

Braking a moving vehicle and its deceleration and stopping distance are essentially dependant on adherence between tire and road surface. Improved braking with an efficient braking system can only be achieved by acting on tire friction features or road surface quality.
Even in optimum conditions, absolutely safe braking is not guaranteed when critical situations have to be coped with, such as low adherence on a wet or icy road, which obliges the vehicle operator to moderate braking action to prevent possible wheel lock and consequent dangerous loss of vehicle control.

The ABS, therefore, has the function of ensuring vehicle stability in any braking condition by preventing wheel locks independently of road surface conditions and guarantees full exploitation of available adherence.

The system enables direction control even when emergency braking and acting on the steering wheel to avoid obstacles with danger of vehicle's control loss.

In essence, the ABS system:
- Prevents wheel locks during vehicle braking and road adherence conditions
- Reduces stop distances
- Offers operator safety for stability and vehicle control maintenance.

Working principle

The objective of the electronic center is to slow down the vehicle as fast as possible, guarantee its stability and avoid the tendency to lock wheels. When braking, the center is informed of the following to reach these objectives:

- Braking intensity required by the operator via the rear axle pressure sensor.
- Slowing reaction due to pressures made available via signals from the speed sensors.

The achievement of above objectives needs sustained monitoring and processing of these data, and you can activate the rear axle modulating valves to obtain best braking performance as required.

Figure 90

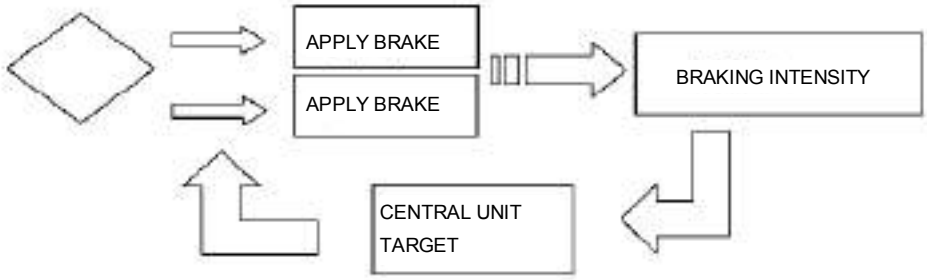

ABS electronic center

Figure 91

Manages the braking system by setting deceleration to the parameters measured by the various system components.

It communicates with on-board electronic systems via a CAN line and is connected through two polarized connectors.

Though offering the possibility of a blink code displayed via the ASR warning light for preliminary diagnosis, the electronic center has an advanced self-diagnosis system capable of identifying and storing any intermittent anomaly to an operating system subject to environmental conditions and ensuring proper and reliable repair.

Pin-out ABS center

Figure 92

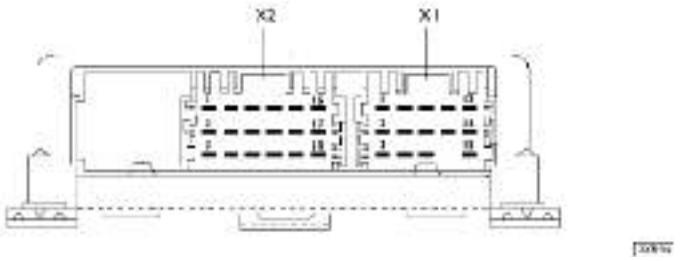

Connector X1

Pin	Funct.	Cable
1	CAN line 'L'	**GN/VE**
2	Axle braking detection pressure signal sensor	**6245**
3	CAN line 'H'	**WS/BI**
4	Mass	**0000**
5	Negative from switch ABS	**0049**
6	Negative from switch ASR	**0048**
7	Power positive under key	**8847**
8	Direct positive from battery	**7710**
9	Mass	**0000**
10	Diagnosis connector K line (pin 4)	**2299**
11	Diagnosis connector K line (pin 3)	**1199**
12	Safety bridge pin 9/15	**---**
13	Negative for ASR warning on (Blink Code)	**6672**
14	Negative for third brake cutout	**0029**
15	Negative for defective ABS warning	**6670**

Connector X2

Pin	Funct.	Cable
1	Positive for front right ABS power solenoid valve	**9920**
2	Positive for rear left ABS power solenoid valve	**9931**
3	Positive for front left ABS power solenoid valve	**9921**
4	Positive for front right ABS discharge solenoid valve	**9918**
5	Positive for rear left ABS discharge solenoid valve	**9929**
6	Positive for front left ABS discharge solenoid valve	**9919**
7	Negative for ASR axle solenoid valve	**0260**
8	Positive for rear right ABS power solenoid valve	**9930**
9	Positive for rear right ABS discharge solenoid valve	**9928**
10	Front right sensor	**5571**
11	Rear right sensor	**5572**
12	Front left sensor	**5570**
13	Front right sensor	**5571**
14	Rear left sensor	**5572**
15	Front left sensor	**5570**
16	Positive axle ASR solenoid valve	**9260**
17	Rear right sensor	**5573**
18	Rear right sensor	**5573**

ABS solenoid valve

This normally opened solenoid valve consists of a power coil and a discharge.
It is used to modulate braking pressure when wheel tendency to lock is detected by the speed sensor.
Vehicles with the ABS system have two of them to control the front axle.

Figure 93

Perspective

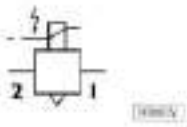

Wiring

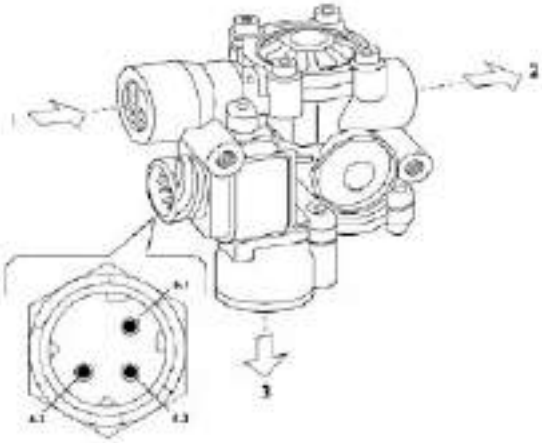

Compressed air connections

1 Proportional relay power

2 Axle brake cylinder output

Sound wheel and speed sensor 88001

Sensors continuously supply the electronic center with all the data it requires to properly pilot the solenoid valves.

Signals are obtained from magnetic flow lines that go through the teeth of a teethed wheel facing the sensor and rotating together with the wheel.

Passage from full to empty due to the presence or absence of the tooth causes sufficient magnetic flow variation to create induced electromagnetic force at sensor terminals and thus an alternating electrical signal that is sent to the electronic center.

The clearance between the sensor and wheel, called air gap, must obviously be at a pre-set value of 0.8 ÷ 1.6 mm for proper signals to be sent. Resistance of each sensor at connection terminals is between 1 and 2 kW.

The toothed wheel is called a sound wheel because the signal it generates has the same frequency as a sound wave.

The frequency of this signal serves to define wheel rotation speed.

Frequency variations, or the speed at which signals follow one another, define acceleration and deceleration rates.

Figure 94

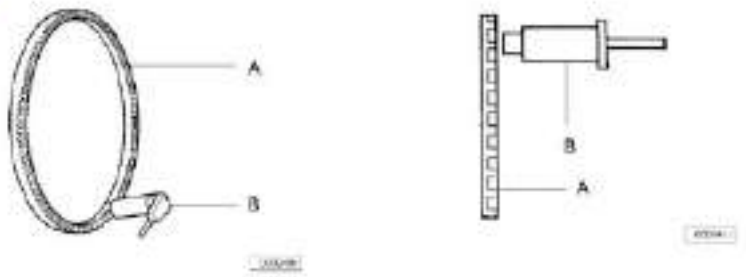

SOUND WHEEL (A) AND SENSOR (B) PERSPECTIVE VIEWS

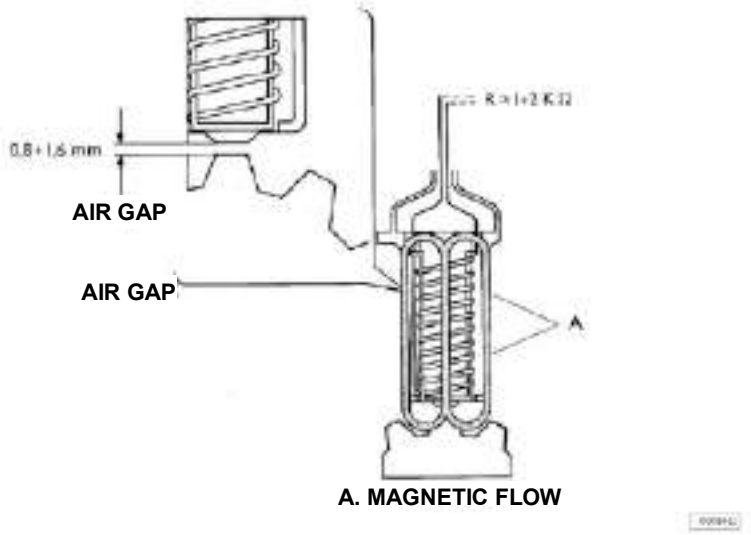

A. MAGNETIC FLOW

Low pressure switch

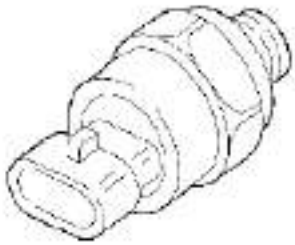

Figure 95

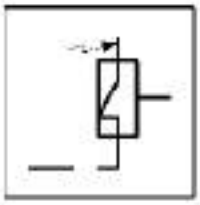

It warns the driver, by warning lights on the CLUSTER, of low pressure in the following systems:

- Front axle brake circuit – N.C. switch 6.6±0.2 bars.
- Intermediate rear axle brake circuit – N.C. switch 6.6±0.2 bars.

A normally closed 6.6 ± 0.2 bar switch is also mounted on the axle reservoir to inform the electronic center of any axle circuit low pressure so as to inhibit differentiated axle braking in the ASR function.

Tachograph (D.T.C.O.)

The electronic tachograph is the last of the set of digital tachograph.

It is located on driver side upper storage box.

By MTCO electronic tachograph, trip speed can be simulated in following way:

- **While you press key "M" [Ride], turn ignition key to ride position;**
- **Press key "M" again and hold until screen page "6" (simulated speed) is displayed;**
- **Press either "+" or " "-" in order to increase or decrease simulated speed; you will temporarily see the speed that had been set on the tachometer;**
- **Start up the engine;**

Figure 96

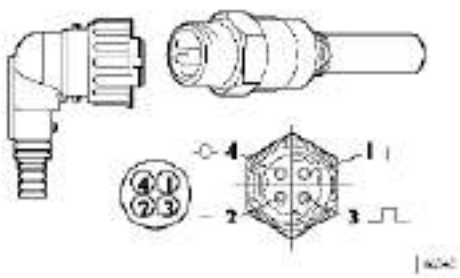

ODOMETER SIGNAL SENSOR

Figure 97

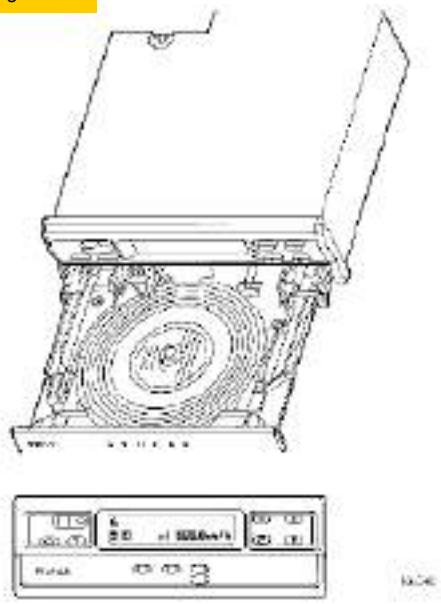

ELECTRONIC TACHOGRAPH

Figure 98

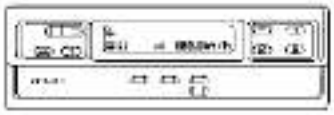

SCREEN PAGE "6"

Figure 99

ELECTRONIC TACHOGRAPH

Figure 100

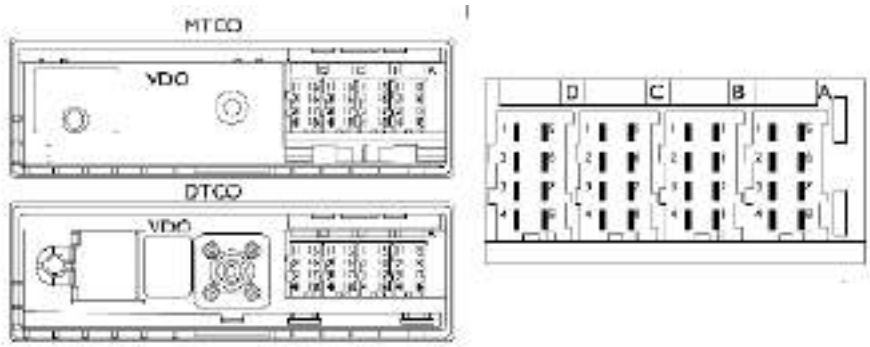

Pin		System	Cable color code
A	1	Direct battery positive +30	
	2	Symbols illumination	
	3	Positive +15	
	4 5	CAN line 'H' (VDB) ground	
	6	Signal from load sensor on accelerator	
	7	-	
	8	CAN Line 'L' (VDB)	
B	1	Sensor power: pin 1	
	2	Sensor ground: pin 2	
	3	Sensor speed signal: pin 3	
	4	Sensor reversed signal: pin 4	
	5	-	
	6	Speed signal for cluster	
	7	Speed signal for EDC	
	8	Run distance signal for cluster	
C	1		-
	2		-
	3		-
	4 5		--
	6		-
	7		-
	8		-
D	1		-
	2		-
	3		-
	4		-
	5		-
	6		-
	7	Line L: instrument panel: pin AI/ Diagnosis: pin 14	2297
	8		-

Wiring diagram

PAGE

Overall Circuit Schematic Diagram

ED1

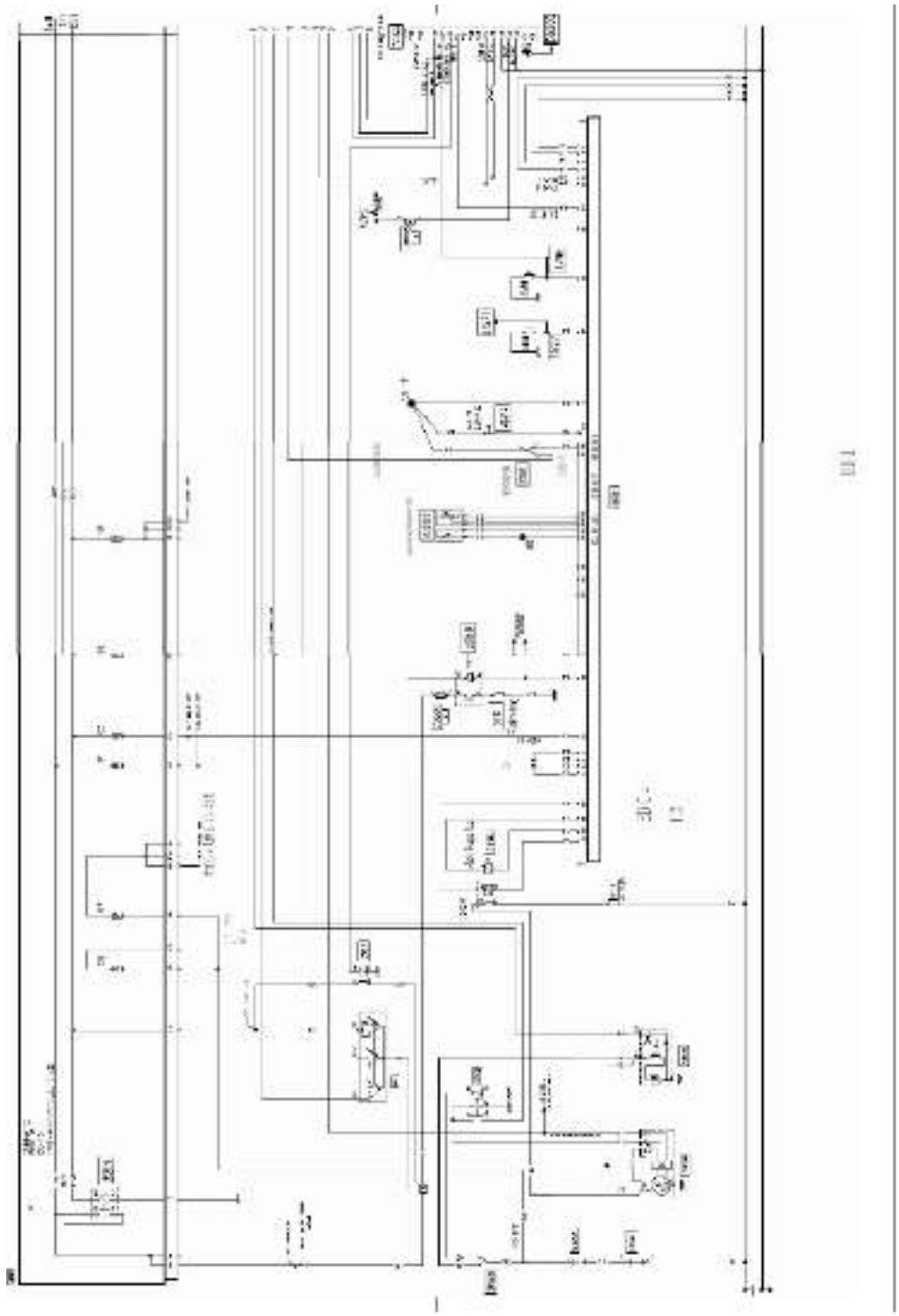

ED2

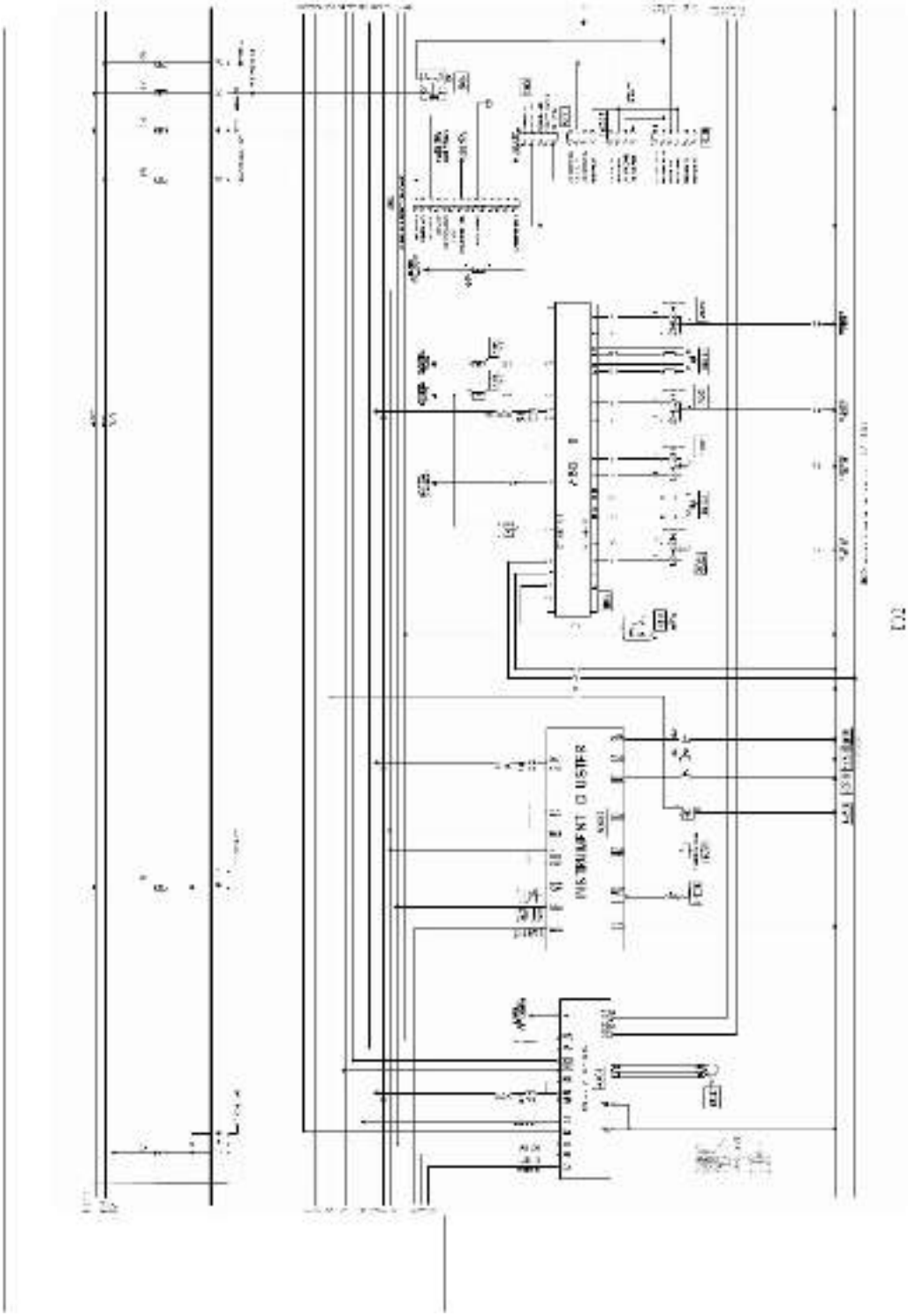

ED3

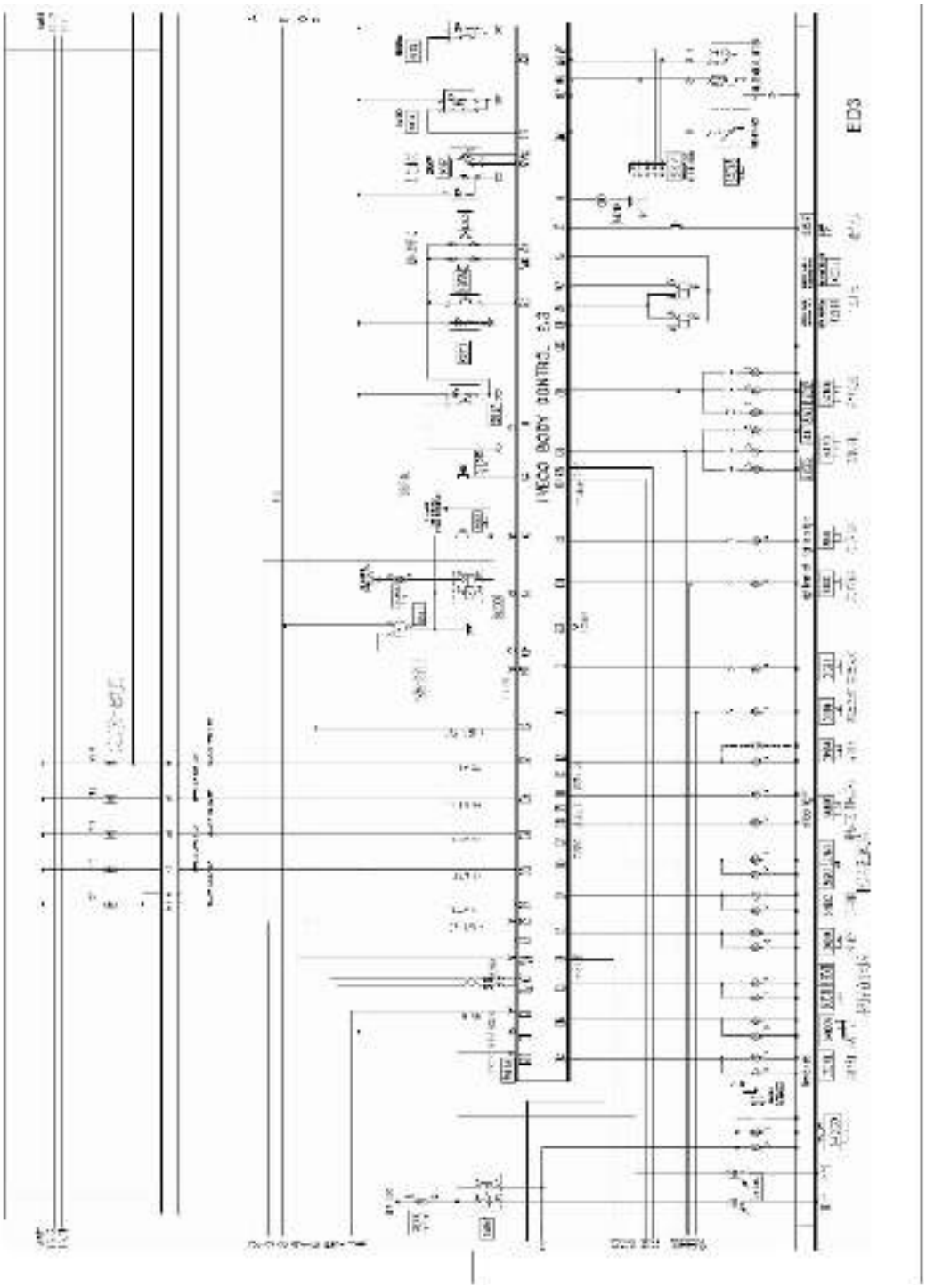

ED4