HYUNDAI
CONSTRUCTION EQUIPMENT U.S.A., INC.

The following contains the Service Manual for the current Hyundai Construction Equipment Forklift.

In order to effectively access and view this manual, please use Adobe Acrobat 7.0 or later software. The latest version of Adobe Reader can be found and downloaded at no cost at http://get.adobe.com/reader/. While viewing the manual, a window may pop-up requesting download of a Korean plug-in to run the program properly. Download this application to ensure compatibility of the PDF.

This software uses Bookmarks to help quickly access each section of the manual. Click on the Bookmarks tab located on the left and click on the plus sign (+) to expand the desired section. Alternatively click on the minus sign (-) to contract a section. Once a section is expanded, you may click on a Section or Group to go directly to that page.

Another method of quickly accessing each page in the manual is going to the 'Table of Contents' and clicking on the desired Section or Group. This will directly take you to that page.

If any part of the manual needs to be printed, press the printer icon, or click on the FILE menu and select print. This will open up the printing options window where you may choose how to print the document.

https://www.forkliftpdfmanuals.com/

Forklift Service Manual

HYUNDAI
HEAVY INDUSTRIES CO.,LTD.

https://www.forkliftpdfmanuals.com/

1. STRUCTURE

This service manual has been prepared as an aid to improve the quality of repairs by giving the serviceman an accurate understanding of the product and by showing him the correct way to perform repairs and make judgements. Make sure you understand the contents of this manual and use it to full effect at every opportunity.
This service manual mainly contains the necessary technical information for operations performed in a service workshop.
For ease of understanding, the manual is divided into the following sections.

SECTION 1 GENERAL
This section gives the general information of the machine and explains the safety hints for maintenance.

SECTION 2 REMOVAL & INSTALLATION OF UNIT
This section explains the procedures and techniques of removal and installation of each component.

SECTION 3 POWER TRAIN SYSTEM
This section explains the structure of the transmission as well as control valve and drive axle.

SECTION 4 BRAKE SYSTEM
This section explains the brake piping, each component and operation.

SECTION 5 STEERING SYSTEM
This section explains the structure of the steering unit, priority valve, trail axle as well as steering circuit and operation.

SECTION 6 HYDRAULIC SYSTEM
This section explains the structure of the gear pump, main control valve as well as work equipment circuit, each component and operation.

SECTION 7 ELECTRICAL SYSTEM
This section explains the electrical circuit and each component.
It serves not only to give an understanding electrical system, but also serves as reference material for troubleshooting.

SECTION 8 MAST
This section explains the structure of mast, carriage, backrest and forks.

The specifications contained in this service manual are subject to change at any time and without any advance notice. Contact your HYUNDAI distributor for the latest information.

https://www.forkliftpdfmanuals.com/

2. HOW TO READ THE SERVICE MANUAL

Distribution and updating

Any additions, amendments or other changes will be sent to HYUNDAI distributors.
Get the most up-to-date information before you start any work.

Filing method

1. See the page number on the bottom of the page.
   File the pages in correct order.
2. Following examples shows how to read the page number.
   Example 1

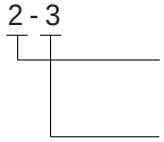

Item number(2. Structure and Function)
Consecutive page number for each item.

3. Additional pages : Additional pages are indicated by a hyphen(-) and number after the page number. File as in the example.

10 - 4
10 - 4 - 1 ┐
10 - 4 - 2 ┘ Added pages
10 - 5

Revised edition mark(①②③…)

When a manual is revised, an edition mark is recorded on the bottom outside corner of the pages.

Revisions

Revised pages are shown at the **list of revised pages** on the between the contents page and section 1 page.

Symbols

So that the shop manual can be of ample practical use, important places for safety and quality are marked with the following symbols.

Symbol	Item	Remarks
	Safety	Special safety precautions are necessary when performing the work.
		Extra special safety precautions are necessary when performing the work because it is under internal pressure.
※	Caution	Special technical precautions or other precautions for preserving standards are necessary when performing the work.

https://www.forkliftpdfmanuals.com/

3. CONVERSION TABLE

Method of using the Conversion Table

The Conversion Table in this section is provided to enable simple conversion of figures. For details of the method of using the Conversion Table, see the example given below.

Example

1. Method of using the Conversion Table to convert from millimeters to inches
   Convert 55mm into inches.

   (1) Locate the number 50in the vertical column at the left side, take this as ⓐ, then draw a horizontal line from ⓐ.

   (2) Locate the number 5in the row across the top, take this as ⓑ, then draw a perpendicular line down from ⓑ.

   (3) Take the point where the two lines cross as ⓒ. This point ⓒ gives the value when converting from millimeters to inches. Therefore, 55mm = 2.165 inches.

2. Convert 550mm into inches.

   (1) The number 550 does not appear in the table, so divide by 10(Move the decimal point one place to the left) to convert it to 55mm.

   (2) Carry out the same procedure as above to convert 55mm to 2.165 inches.

   (3) The original value(550mm) was divided by 10, so multiply 2.165 inches by 10(Move the decimal point one place to the right) to return to the original value.
   This gives 550mm = 21.65 inches.

Millimeters to inches

1mm = 0.03937 in

	0	1	2	3	4	5 ⓑ	6	7	8	9
0		0.039	0.079	0.118	0.157	0.197	0.236	0.276	0.315	0.354
10	0.394	0.433	0.472	0.512	0.551	0.591	0.630	0.669	0.709	0.748
20	0.787	0.827	0.866	0.906	0.945	0.984	1.024	1.063	1.102	1.142
30	1.181	1.220	1.260	1.299	1.339	1.378	1.417	1.457	1.496	1.536
40	1.575	1.614	1.654	1.693	1.732	1.772	1.811	1.850	1.890	1.929
ⓐ 50	1.969	2.008	2.047	2.087	2.126	ⓒ 2.165	2.205	2.244	2.283	2.323
60	2.362	2.402	2.441	2.480	2.520	2.559	2.598	2.638	2.677	2.717
70	2.756	2.795	2.835	2.874	2.913	2.953	2.992	3.032	3.071	3.110
80	3.150	3.189	3.228	3.268	3.307	3.346	3.386	3.425	3.465	3.504
90	3.543	3.583	3.622	3.661	3.701	3.740	3.780	3.819	3.858	3.898

https://www.forkliftpdfmanuals.com/

Millimeters to inches

1mm = 0.03937in

	0	1	2	3	4	5	6	7	8	9
0		0.039	0.079	0.118	0.157	0.197	0.236	0.276	0.315	0.354
10	0.394	0.433	0.472	0.512	0.551	0.591	0.630	0.669	0.709	0.748
20	0.787	0.827	0.866	0.906	0.945	0.984	1.024	1.063	1.102	1.142
30	1.181	1.220	1.260	1.299	1.339	1.378	1.417	1.457	1.496	1.536
40	1.575	1.614	1.654	1.693	1.732	1.772	1.811	1.850	1.890	1.929
50	1.969	2.008	2.047	2.087	2.126	2.165	2.205	2.244	2.283	2.323
60	2.362	2.402	2.441	2.480	2.520	2.559	2.598	2.638	2.677	2.717
70	2.756	2.795	2.835	2.874	2.913	2.953	2.992	3.032	3.071	3.110
80	3.150	3.189	3.228	3.268	3.307	3.346	3.386	3.425	3.465	3.504
90	3.543	3.583	3.622	3.661	3.701	3.740	3.780	3.819	3.858	3.898

Kilogram to Pound

1kg = 2.2046lb

	0	1	2	3	4	5	6	7	8	9
0		2.20	4.41	6.61	8.82	11.02	13.23	15.43	17.64	19.84
10	22.05	24.25	26.46	28.66	30.86	33.07	35.27	37.48	39.68	41.89
20	44.09	46.30	48.50	50.71	51.91	55.12	57.32	59.5.	61.73	63.93
30	66.14	68.34	70.55	72.75	74.96	77.16	79.37	81.57	83.78	85.98
40	88.18	90.39	92.59	94.80	97.00	99.21	101.41	103.62	105.82	108.03
50	110.23	112.44	114.64	116.85	119.05	121.25	123.46	125.66	127.87	130.07
60	132.28	134.48	136.69	138.89	141.10	143.30	145.51	147.71	149.91	152.12
70	154.32	156.53	158.73	160.94	163.14	165.35	167.55	169.76	171.96	174.17
80	176.37	178.57	180.78	182.98	185.19	187.39	189.60	191.80	194.01	196.21
90	198.42	200.62	202.83	205.03	207.24	209.44	211.64	213.85	216.05	218.26

https://www.forkliftpdfmanuals.com/

Liter to U.S. Gallon

1 ℓ = 0.2642 U.S.Gal

	0	1	2	3	4	5	6	7	8	9
0		0.264	0.528	0.793	1.057	1.321	1.585	1.849	2.113	2.378
10	2.642	2.906	3.170	3.434	3.698	3.963	4.227	4.491	4.755	5.019
20	5.283	5.548	5.812	6.6076	6.340	6.604	6.869	7.133	7.397	7.661
30	7.925	8.189	8.454	8.718	8.982	9.246	9.510	9.774	10.039	10.303
40	10.567	10.831	11.095	11.359	11.624	11.888	12.152	12.416	12.680	12.944
50	13.209	13.473	13.737	14.001	14.265	14.529	14.795	15.058	15.322	15.586
60	15.850	16.115	16.379	16.643	16.907	17.171	17.435	17.700	17.964	18.228
70	18.492	18.756	19.020	19.285	19.549	19.813	20.077	20.341	20.605	20.870
80	21.134	21.398	21.662	21.926	22.190	22.455	22.719	22.983	23.247	23.511
90	23.775	24.040	24.304	24.568	24.832	25.096	25.631	25.625	25.889	26.153

Liter to U.K. Gallon

1 ℓ = 0.21997 U.K.Gal

	0	1	2	3	4	5	6	7	8	9
0		0.220	0.440	0.660	0.880	1.100	1.320	1.540	1.760	1.980
10	2.200	2.420	2.640	2.860	3.080	3.300	3.520	3.740	3.950	4.179
20	4.399	4.619	4.839	5.059	5.279	5.499	5.719	5.939	6.159	6.379
30	6.599	6.819	7.039	7.259	7.479	7.969	7.919	8.139	8.359	8.579
40	8.799	9.019	9.239	9.459	9.679	9.899	10.119	10.339	10.559	10.778
50	10.998	11.281	11.438	11.658	11.878	12.098	12.318	12.528	12.758	12.978
60	13.198	13.418	13.638	13.858	14.078	14.298	14.518	14.738	14.958	15.178
70	15.398	15.618	15.838	16.058	16.278	16.498	16.718	16.938	17.158	17.378
80	17.598	17.818	18.037	18.257	18.477	18.697	18.917	19.137	19.357	19.577
90	19.797	20.017	20.237	20.457	20.677	20.897	21.117	21.337	21.557	21.777

https://www.forkliftpdfmanuals.com/

kgf · m to lbf · ft

1kgf · m = 7.233lbf · ft

	0	1	2	3	4	5	6	7	8	9
		7.2	14.5	21.7	28.9	36.2	43.4	50.6	57.9	65.1
10	72.3	79.6	86.8	94.0	101.3	108.5	115.7	123.0	130.2	137.4
20	144.7	151.9	159.1	166.4	173.6	180.8	188.1	195.3	202.5	209.8
30	217.0	224.2	231.5	238.7	245.9	253.2	260.4	267.6	274.9	282.1
40	289.3	396.6	303.8	311.0	318.3	325.5	332.7	340.0	347.2	354.4
50	361.7	368.9	376.1	383.4	390.6	397.8	405.1	412.3	419.5	426.8
60	434.0	441.2	448.5	455.7	462.9	470.2	477.4	484.6	491.8	499.1
70	506.3	513.5	520.8	528.0	535.2	542.5	549.7	556.9	564.2	571.4
80	578.6	585.9	593.1	600.3	607.6	614.8	622.0	629.3	636.5	643.7
90	651.0	658.2	665.4	672.7	679.9	687.1	694.4	701.6	708.8	716.1
100	723.3	730.5	737.8	745.0	752.2	759.5	766.7	773.9	781.2	788.4
110	795.6	802.9	810.1	817.3	824.6	831.8	839.0	846.3	853.5	860.7
120	868.0	875.2	882.4	889.7	896.9	904.1	911.4	918.6	925.8	933.1
130	940.3	947.5	954.8	962.0	969.2	976.5	983.7	990.9	998.2	10005.4
140	1012.6	1019.9	1027.1	1034.3	1041.5	1048.8	1056.0	1063.2	1070.5	1077.7
150	1084.9	1092.2	1099.4	1106.6	1113.9	1121.1	1128.3	1135.6	1142.8	1150.0
160	1157.3	1164.5	1171.7	1179.0	1186.2	1193.4	1200.7	1207.9	1215.1	1222.4
170	1129.6	1236.8	1244.1	1251.3	1258.5	1265.8	1273.0	1280.1	1287.5	1294.7
180	1301.9	1309.2	1316.4	1323.6	1330.9	1338.1	1345.3	1352.6	1359.8	1367.0
190	1374.3	1381.5	1388.7	1396.0	1403.2	1410.4	1417.7	1424.9	1432.1	1439.4

https://www.forkliftpdfmanuals.com/

kgf/cm^2 to lbf/in^2

1kgf / cm^2 = 14.2233lbf / in^2

	0	1	2	3	4	5	6	7	8	9
		14.2	28.4	42.7	56.9	71.1	85.3	99.6	113.8	128.0
10	142.2	156.5	170.7	184.9	199.1	213.4	227.6	241.8	256.0	270.2
20	284.5	298.7	312.9	327.1	341.4	355.6	369.8	384.0	398.3	412.5
30	426.7	440.9	455.1	469.4	483.6	497.8	512.0	526.3	540.5	554.7
40	568.9	583.2	597.4	611.6	625.8	640.1	654.3	668.5	682.7	696.9
50	711.2	725.4	739.6	753.8	768.1	782.3	796.5	810.7	825.0	839.2
60	853.4	867.6	881.8	896.1	910.3	924.5	938.7	953.0	967.2	981.4
70	995.6	1010	1024	1038	1053	1067	1081	1095	1109	1124
80	1138	1152	1166	1181	1195	1209	1223	1237	1252	1266
90	1280	1294	1309	1323	1337	1351	1365	1380	1394	1408
100	1422	1437	1451	1465	1479	1493	1508	1522	1536	1550
110	1565	1579	1593	1607	1621	1636	1650	1664	1678	1693
120	1707	1721	1735	1749	1764	1778	1792	1806	1821	1835
130	1849	2863	1877	1892	1906	1920	1934	1949	1963	1977
140	1991	2005	2020	2034	2048	2062	2077	2091	2105	2119
150	2134	2148	2162	2176	2190	2205	2219	2233	2247	2262
160	2276	2290	2304	2318	2333	2347	2361	2375	2389	2404
170	2418	2432	2446	2460	2475	2489	2503	2518	2532	2546
180	2560	2574	2589	5603	2617	2631	2646	2660	2674	2688
200	2845	2859	2873	2887	2901	2916	2930	2944	2958	2973
210	2987	3001	3015	3030	3044	3058	3072	3086	3101	3115
220	3129	3143	3158	3172	3186	3200	3214	3229	3243	3257
230	3271	3286	3300	3314	3328	3343	3357	3371	3385	3399
240	3414	3428	3442	3456	3470	3485	3499	3513	3527	3542

https://www.forkliftpdfmanuals.com/

TEMPERATURE

Fahrenheit-Centigrade Conversion.

A simple way to convert a fahrenheit temperature reading into a centigrade temperature reading or vice verse is to enter the accompanying table in the center or boldface column of figures.

These figures refer to the temperature in either Fahrenheit or Centigrade degrees.

If it is desired to convert from Fahrenheit to Centigrade degrees, consider the center column as a table of Fahrenheit temperatures and read the corresponding Centigrade temperature in the column at the left.

If it is desired to convert from Centigrade to Fahrenheit degrees, consider the center column as a table of Centigrade values, and read the corresponding Fahrenheit temperature on the right.

°C		°F	°C		°F	°C		°F	°C		°F
-40.4	-40	-40.0	-11.7	11	51.8	7.8	46	114.8	27.2	81	117.8
-37.2	-35	-31.0	-11.1	12	53.6	8.3	47	116.6	27.8	82	179.6
-34.4	-30	-22.0	-10.6	13	55.4	8.9	48	118.4	28.3	83	181.4
-31.7	-25	-13.0	-10.0	14	57.2	9.4	49	120.2	28.9	84	183.2
-28.9	-20	-4.0	-9.4	15	59.0	10.0	50	122.0	29.4	85	185.0
-28.3	-19	-2.2	-8.9	16	60.8	10.6	51	123.8	30.0	86	186.8
-27.8	-18	-0.4	-8.3	17	62.6	11.1	52	125.6	30.6	87	188.6
-27.2	-17	1.4	-7.8	18	64.4	11.7	53	127.4	31.1	88	190.4
-26.7	-16	3.2	-6.7	20	68.0	12.8	55	131.0	32.2	90	194.0
-26.1	-15	5.0	-6.7	20	68.0	12.8	55	131.0	32.2	90	194.0
-25.6	-14	6.8	-6.1	21	69.8	13.3	56	132.8	32.8	91	195.8
-25.0	-13	8.6	-5.6	22	71.6	13.9	57	134.6	33.3	92	197.6
-24.4	-12	10.4	-5.0	23	73.4	14.4	58	136.4	33.9	93	199.4
-23.9	-11	12.2	-4.4	24	75.2	15.0	59	138.2	34.4	94	201.2
-23.3	-10	14.0	-3.9	25	77.0	15.6	60	140.0	35.0	95	203.0
-22.8	-9	15.8	-3.3	26	78.8	16.1	61	141.8	35.6	96	204.8
-22.2	-8	17.6	-2.8	27	80.6	16.7	62	143.6	36.1	97	206.6
-21.7	-7	19.4	-2.2	28	82.4	17.2	63	145.4	36.7	98	208.4
-21.1	-6	21.2	-1.7	29	84.2	17.8	64	147.2	37.2	99	210.2
-20.6	-5	23.0	-1.1	35	95.0	21.1	70	158.0	51.7	125	257.0
-20.0	-4	24.8	-0.6	31	87.8	18.9	66	150.8	40.6	105	221.0
-19.4	-3	26.6	0	32	89.6	19.4	67	152.6	43.3	110	230.0
-18.9	-2	28.4	0.6	33	91.4	20.0	68	154.4	46.1	115	239.0
-18.3	-1	30.2	1.1	34	93.2	20.6	69	156.2	48.9	120	248.0
-17.8	0	32.0	1.7	35	95.0	21.1	70	158.0	51.7	125	257.0
-17.2	1	33.8	2.2	36	96.8	21.7	71	159.8	54.4	130	266.0
-16.7	2	35.6	2.8	37	98.6	22.2	72	161.6	57.2	135	275.0
-16.1	3	37.4	3.3	38	100.4	22.8	73	163.4	60.0	140	284.0
-15.6	4	39.2	3.9	39	102.2	23.3	74	165.2	62.7	145	293.0
-15.0	5	41.0	4.4	40	104.0	23.9	75	167.0	65.6	150	302.0
-14.4	6	42.8	5.0	41	105.8	24.4	76	168.8	68.3	155	311.0
-13.9	7	44.6	5.6	42	107.6	25.0	77	170.6	71.1	160	320.0
-13.3	8	46.4	6.1	43	109.4	25.6	78	172.4	73.9	165	329.0
-12.8	9	48.2	6.7	44	111.2	26.1	79	174.2	76.7	170	338.0
-12.2	10	50.0	7.2	45	113.0	26.7	80	176.0	79.4	172	347.0

https://www.forkliftpdfmanuals.com/

CONTENTS

SECTION 1 GENERAL

Group 1 Safety Hints ····· 1-1
Group 2 Specifications ····· 1-5
Group 3 Periodic Replacement ····· 1-14

SECTION 2 REMOVAL AND INSTALLATION OF UNIT

Group 1 Structure ····· 2-1
Group 2 Removal and Installation of Unit ····· 2-2

SECTION 3 POWER TRAIN SYSTEM

Group 1 Structure and Operation ····· 3-1
Group 2 Troubleshooting ····· 3-21
Group 3 Disassembly and Assembly ····· 3-25

SECTION 4 BRAKE SYSTEM

Group 1 Structure and Function ····· 4-1
Group 2 Operational Checks and Troubleshooting ····· 4-8
Group 3 Tests and Adjustments ····· 4-10

SECTION 5 STEERING SYSTEM

Group 1 Structure and Function ····· 5-1
Group 2 Operational Checks and Troubleshooting ····· 5-12
Group 3 Disassembly and Assembly ····· 5-14

SECTION 6 HYDRAULIC SYSTEM

Group 1 Structure and Function ····· 6-1
Group 2 Operational Checks and Troubleshooting ····· 6-19
Group 3 Disassembly and Assembly ····· 6-23

SECTION 7 ELECTRICAL SYSTEM

Group 1 Component Location ····· 7-1
Group 2 Electrical Circuit ····· 7-2
Group 3 Component Specification ····· 7-10
Group 4 Connector Destination ····· 7-11
Group 5 Troubleshooting ····· 7-13

https://www.forkliftpdfmanuals.com/

SECTION 8 MAST

Group 1 Structure ····· 8-1
Group 2 Operational Checks and Troubleshooting ····· 8-5
Group 3 Adjustment ····· 8-8
Group 4 Removal and Installation ····· 8-11

https://www.forkliftpdfmanuals.com/

SECTION 1 GENERAL

Group 1 Safety hints ····· 1-1
Group 2 Specifications ····· 1-5
Group 3 Periodic replacement ····· 1-14

https://www.forkliftpdfmanuals.com/

GROUP 1 SAFETY HINTS

Careless performing of the easy work may cause injuries.
Take care to always perform work safely, at least observing the following.

- Oil is a dangerous substance. Never handle oil, grease or oily clothes in places where there is any fire of flame.
  As preparation in case of fire, always know the location and directions for use of fire extinguishers and other fire fighting equipment.

D50ASF01

- Wear well-fitting helmet, safety shoes and working clothes. When drilling, grinding or hammering, always wear protective goggles.
  Always do up safety clothes properly so that they do not catch on protruding parts of machines. Do not wear oily clothes.
  When checking, always release battery plug.

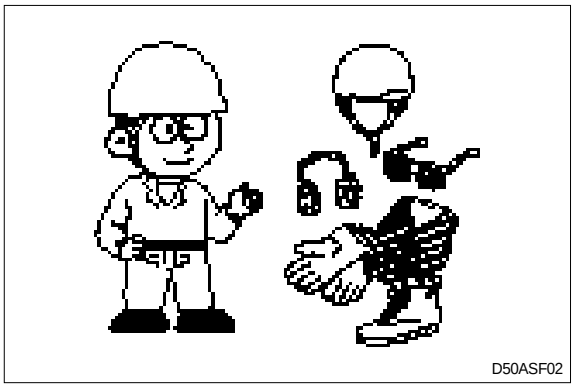
D50ASF02

- Flames should never be used instead of lamps. Never use a naked flame to check leaks or the level of oil or electrolyte.

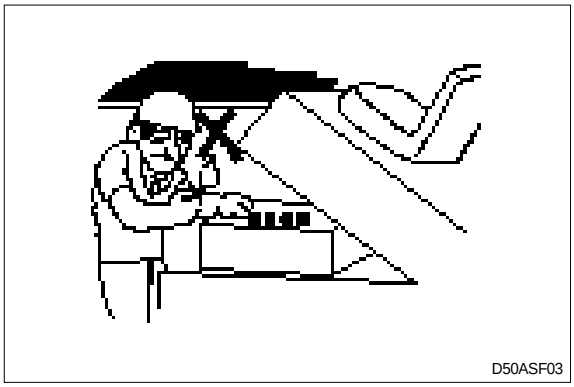
D50ASF03

- Exhaust gas is dangerous. Provide adequate ventilation when working a closed space.

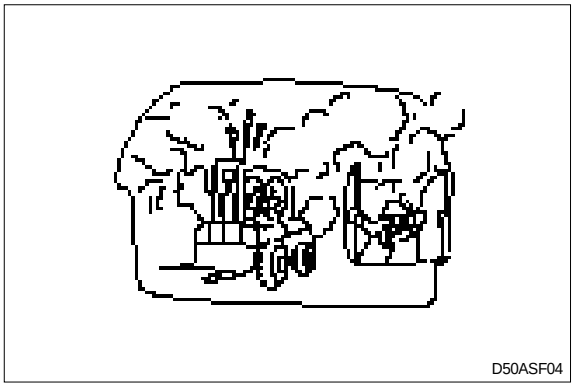
D50ASF04

https://www.forkliftpdfmanuals.com/

GROUP 1 SAFETY HINTS

Careless performing of the easy work may cause injuries.
Take care to always perform work safely, at least observing the following.

- Oil is a dangerous substance. Never handle oil, grease or oily clothes in places where there is any fire of flame.
  As preparation in case of fire, always know the location and directions for use of fire extinguishers and other fire fighting equipment.

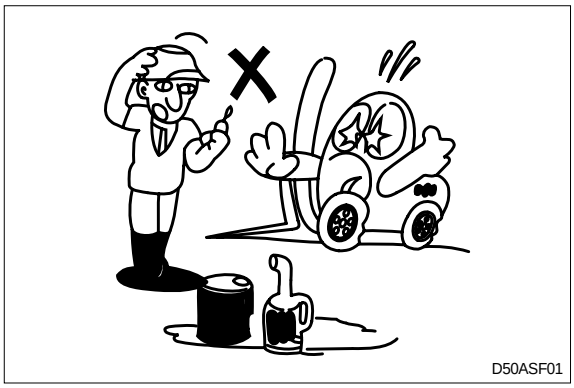
D50ASF01

- Wear well-fitting helmet, safety shoes and working clothes. When drilling, grinding or hammering, always wear protective goggles.
  Always do up safety clothes properly so that they do not catch on protruding parts of machines. Do not wear oily clothes.
  When checking, always release battery plug.

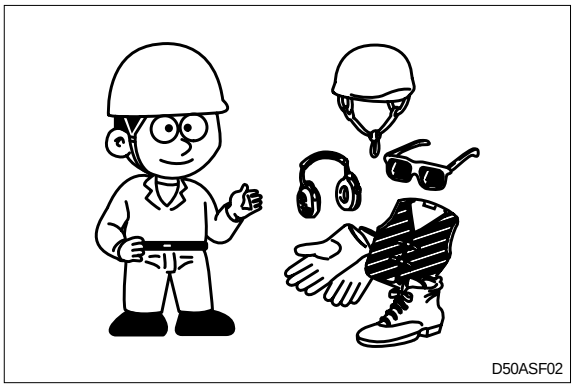
D50ASF02

- Flames should never be used instead of lamps. Never use a naked flame to check leaks or the level of oil or electrolyte.

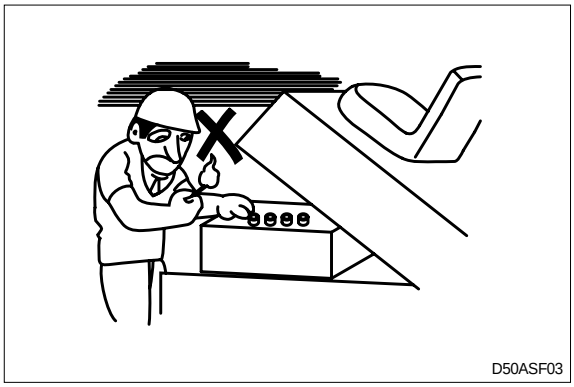
D50ASF03

- Exhaust gas is dangerous. Provide adequate ventilation when working a closed space.

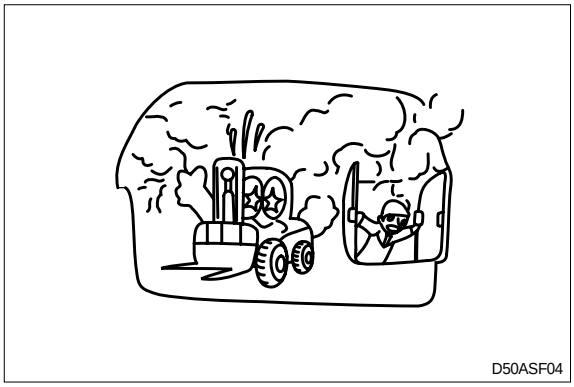
D50ASF04

https://www.forkliftpdfmanuals.com/

⚠ Be particularly careful when removing the radiator cap and the hydraulic oil tank filler cap, if this is done immediately after using the machine, there is a danger that boiled oil may spurt out.

- The procedure for releasing the hydraulic pressure is as follows : lower the fork to the ground, and stop the engine(Motor), move the control levers to each position two or three times.

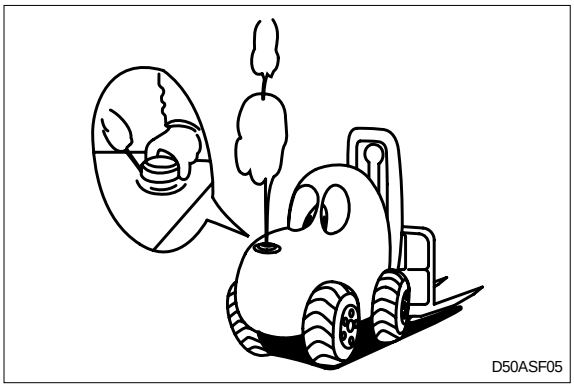
D50ASF05

- When working on top of the machine, be careful not to lose your balance and fall.

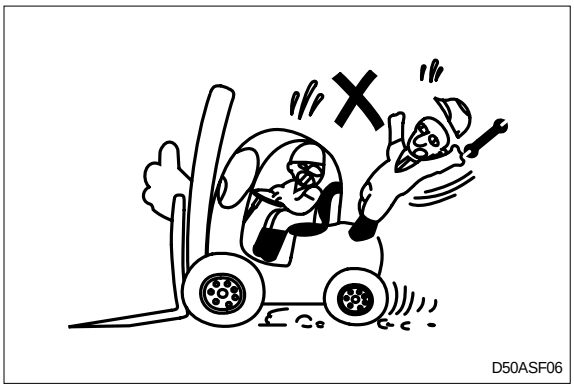
D50ASF06

- Hand a caution sign in the operator's compartment (For example **Do not start** or **Maintenance in progress**).
  This will prevent anyone from starting or moving the machine by mistake.

⚠ It is extremely dangerous to try to check the fan belt tension while he engine is running.

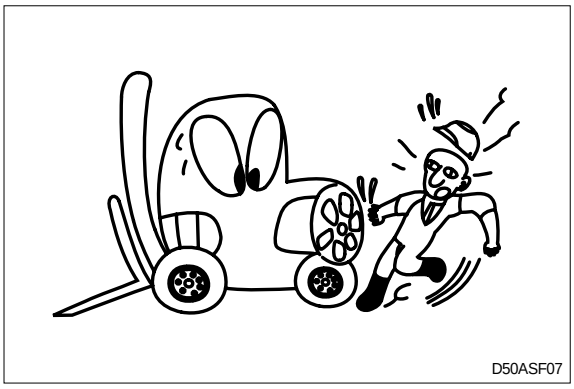
D50ASF07

When inspecting the engine is running parts, or near such parts, always stop the engine first.
Before checking or servicing accumulator or piping, depress brake pedal repeatedLy to release pressure.

- Park the machine on firm, flat ground.
  Lower the fork to the ground and stop the engine.
  Return each lever to **NEUTRAL** and apply the brake lock.

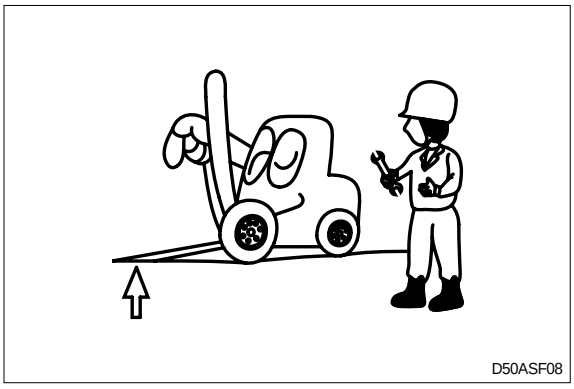
D50ASF08

https://www.forkliftpdfmanuals.com/

- Immediately remove any oil or grease on the floor of the operator's compartment, or on the handrail. It is very dangerous if someone slips while on the machine.

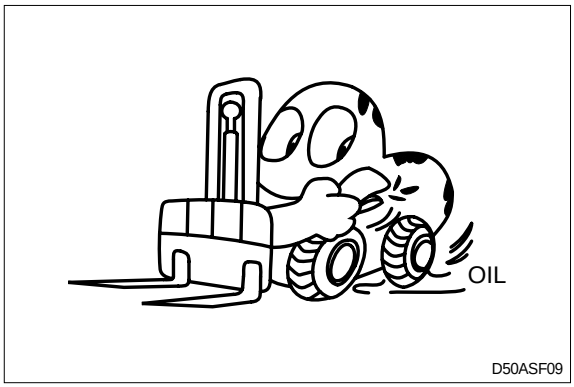

- When working with others, choose a group leader and work according to his instructions. Do not perform any maintenance beyond the agreed work.

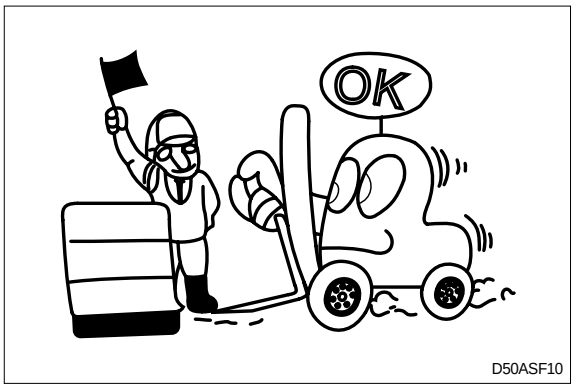

- Always remember that the hydraulic oil circuit is under pressure. When feeding or draining the oil or carrying out inspection and maintenance, release the pressure first.

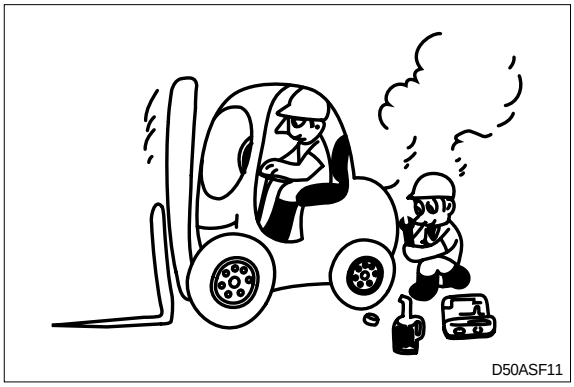

- Unless you have special instructions to the contrary, maintenance should always be carried out with the engine stopped. If maintenance is carried out with the engine running, there must be two men present : one sitting in the operator's seat and the other one performing the maintenance. In such a case, never touch any moving part.

https://www.forkliftpdfmanuals.com/

- Thoroughly clean the machine. In particular, be careful to clean the filler caps, grease fittings and the area around the dipsticks. Be careful not to let any dirt or dust into the system.
- Always use HYUNDAI Forklift genuine parts for replacement.
- Always use the grades of grease and oil recommended by HYUNDAI Forklift.
  Choose the viscosity specified for the ambient temperature.
- Always use pure oil or grease, and be sure to use clean containers.
- When checking or changing the oil, do it in a place free of dust, and prevent any dirt from getting into the oil.
- Before draining the oil, warm it up to a temperature of 30 to 40°C.
- After replacing oil, filter element or strainer, bleed the air from circuit.
- When the strainer is located in the oil filler, the strainer must not be removed while adding oil.
- When changing the oil filter, check the drained oil and filter for any signs of excessive metal particles or other foreign materials.
- When removing parts containing O-ring, gaskets or seals, clean the mounting surface and replace with new sealing parts.
- After injecting grease, always wipe off the oil grease that was forced out.
- Do not handle electrical equipment while wearing wet places, as this can cause electric shock.
- During maintenance do not allow any unauthorized person to stand near the machine.
- Be sure you fully understand the contents of the operation. It is important to prepare necessary tools and parts and to keep the operating area clean.
- When checking an open gear case there is a risk of dropping things in. Before removing the covers to inspect such cases, empty everything from your pockets. Be particularly careful to remove wrenches and nuts.
- Way to use dipstick
  Push the dipstick fully into the guide, and then pull out.

Carrying out other difficult maintenance work carelessly can cause unexpected accidents. If you consider the maintenance is too difficult, always request the HYUNDAI Forklift distributor to carry out it.

https://www.forkliftpdfmanuals.com/

GROUP 2 SPECIFICATIONS

1. GENERAL LOCATIONS

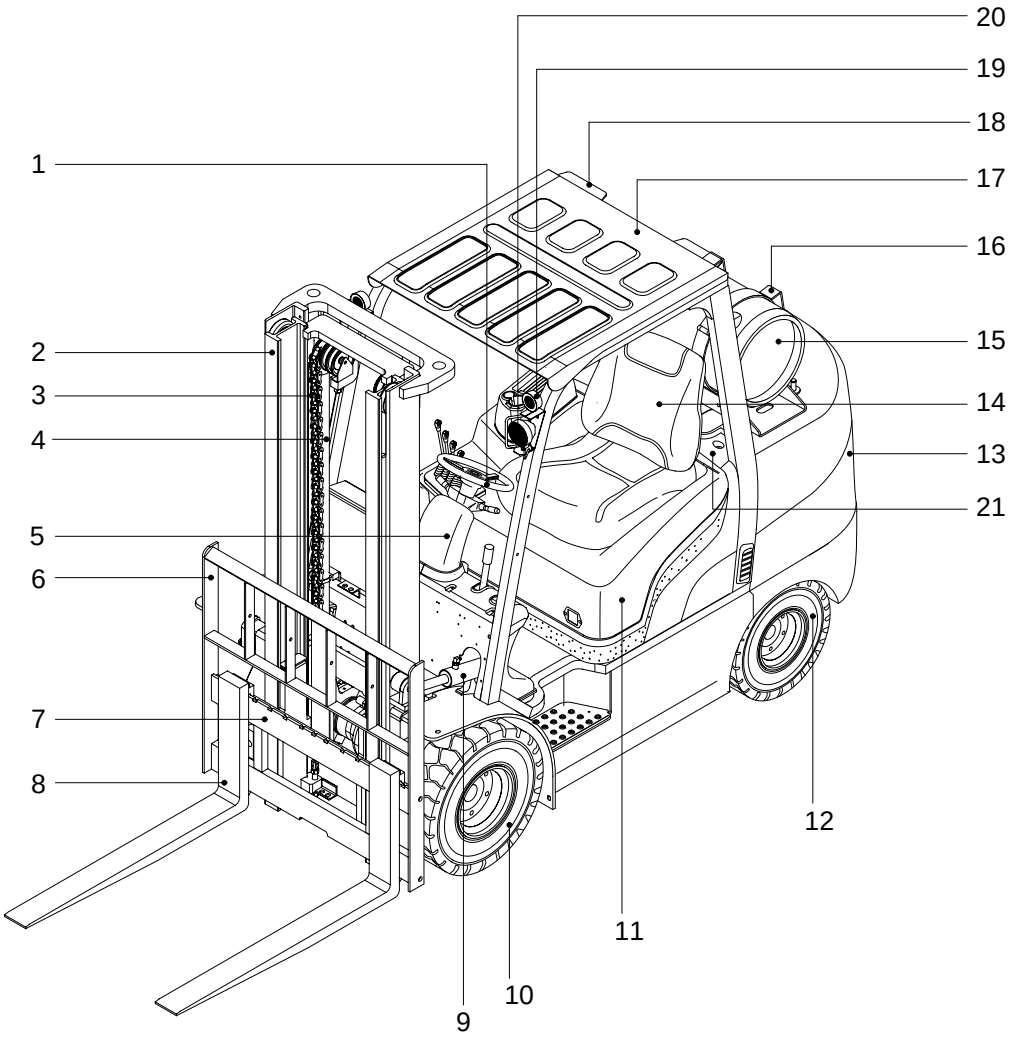

25L7OM57

1	Steering wheel	8	Forks	15	LPG tank
2	Mast	9	Tilt cylinder	16	Clamp
3	Lift chain	10	Front wheel	17	Overhead guard
4	Lift cylinder	11	Bonnet	18	Rear combination lamp
5	Cluster	12	Rear wheel	19	Turn signal lamp
6	Backrest	13	Counterweight	20	Head lamp
7	Carriage	14	Seat	21	Sub bonnet

https://www.forkliftpdfmanuals.com/

2. SPECIFICATIONS

1) 20L/25L/30L-7, 20G/25G/30G-7

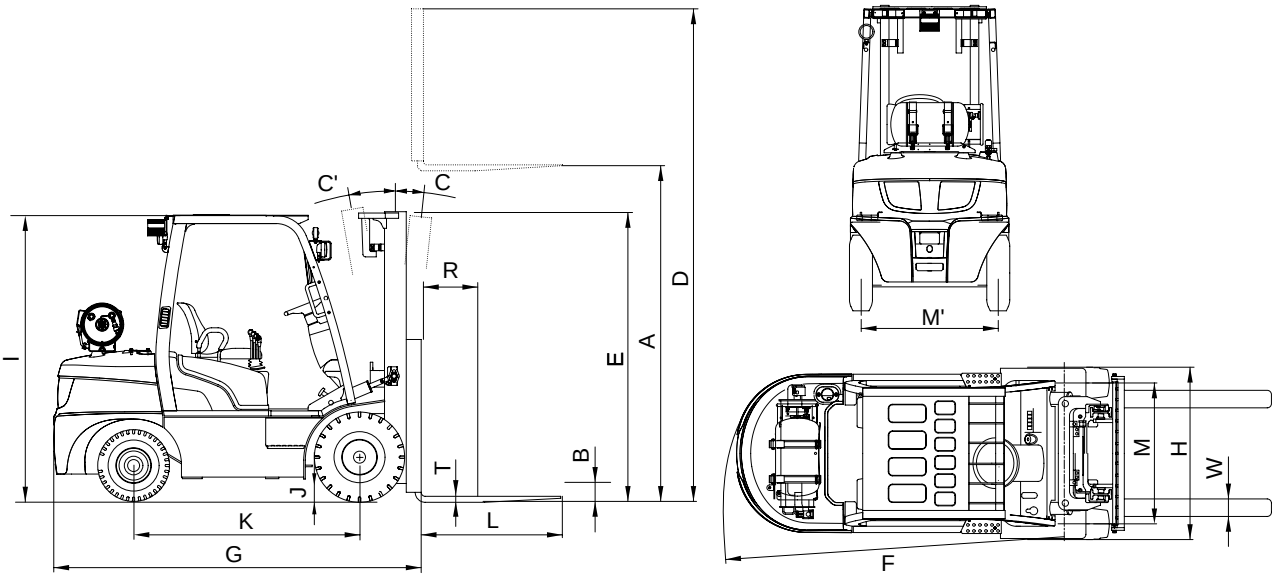

25L7SP01

Model			Unit	20L-7, 20G-7	25L-7, 25G-7	30L-7, 30G-7
Capacity			kg	2000	2500	3000
Load center		R	mm	500	←	←
Weight(Unloaded)			kg	3476	3766	4268
Fork	Lifting height	A	mm	3300	←	←
	Free lift	B	mm	155	←	←
	Lifting speed(Unload/Load)		mm/sec	610/580	610/550	610/500
	Lowering speed(Unload/Load)		mm/sec	450/500	←	←
	L×W×T	L,W,T	mm	1050×100×45	←	1050×125×45
Mast	Tilt angle (forward/backward)	C/C'	degree	6/10	←	←
	Max height	D	mm	4485	←	←
	Min height	E	mm	2175	←	2190
Body	Travel speed		km/h	20.6	←	21.6
	Gradeability		%	27.6	24	19.4
	Min turning radius(Outside)	F	mm	2252	2300	2393
ETC	Hydraulic oil tank		ℓ	30	←	←
	Fuel tank(Gasoline)		ℓ	54	←	←
Overall length		G	mm	2527	2582	2688
Overall width		H	mm	1160	←	1230
Overhead guard height		I	mm	2160	←	2180
Ground clearance(Load)		J	mm	114	108	118
Wheel base		K	mm	1650	←	1700
Wheel tread front/rear		M, M'	mm	965/980	←	1005/980

https://www.forkliftpdfmanuals.com/

2) 20LC/25LC/30LC-7, 20GC/25GC/30GC-7

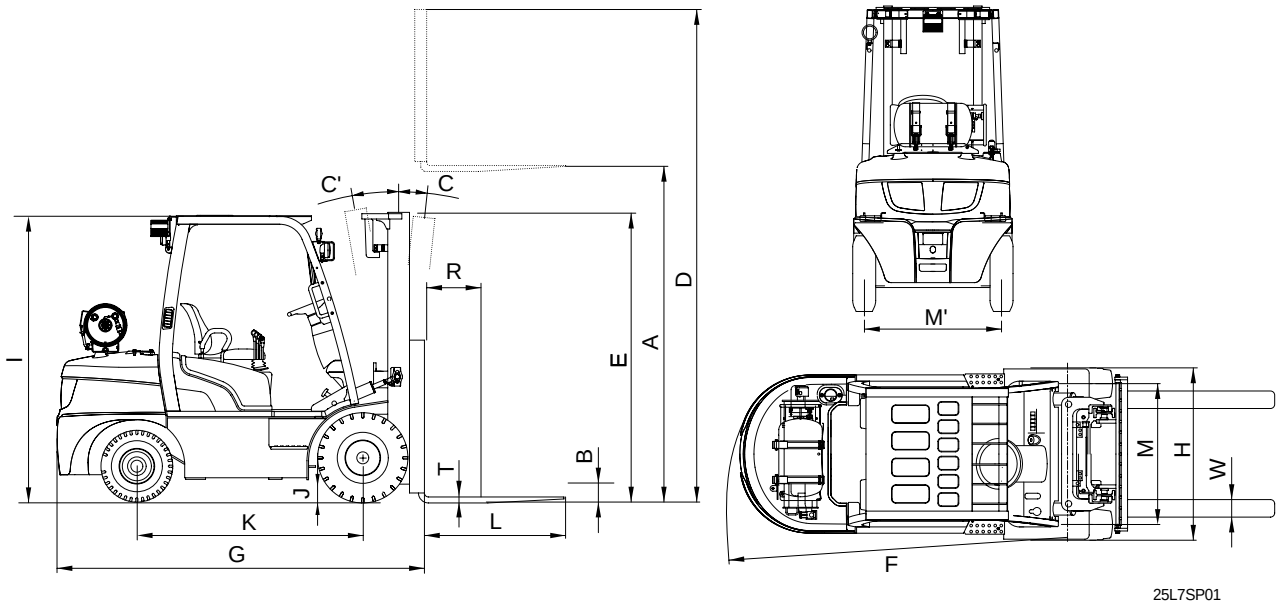

Model			Unit	20LC-7, 20GC-7	25LC-7, 25GC-7	30LC-7, 30GC-7
Capacity			kg	2000	2500	3000
Load center		R	mm	500	←	←
Weight(Unloaded)			kg	3413	3753	4214
Fork	Lifting height	A	mm	3300	←	←
	Free lift	B	mm	115	←	←
	Lifting speed(Unload/Load)		mm/sec	610/580	610/550	610/500
	Lowering speed(Unload/Load)		mm/sec	450/500	←	←
	L×W×T	L,W,T	mm	1050×100×45	←	1050×125×45
Mast	Tilt angle (forward/backward)	C/C'	degree	6/10	←	←
	Max height	D	mm	4485	←	←
	Min height	E	mm	2135	←	←
Body	Travel speed		km/h	18.6	←	←
	Gradeability		%	30.9	26	21.8
	Min turning radius(Outside)	F	mm	2038	2074	2116
ETC	Hydraulic oil tank		ℓ	30	←	←
	Fuel tank(Gasoline)		ℓ	44	←	←
Overall length		G	mm	2255	2315	2370
Overall width		H	mm	1065	←	1110
Overhead guard height		I	mm	2090	←	←
Ground clearance(Load)		J	mm	90	←	←
Wheel base		K	mm	1410	←	←
Wheel tread front/rear		M, M'	mm	890/910	←	905/910

https://www.forkliftpdfmanuals.com/

3. SPECIFICATION FOR MAJOR COMPONENTS

1) ENGINE

Item	Unit	Specification
Model	-	HYUNDAI beta
Type	-	4-cycle, vertical
Cooling Method	-	Water cooled
Number of cylinders and arrangement	-	4 cylinders, In line
Firing order	-	1-3-4-2
Cylinder bore X stroke	mm(in)	82×93.5(3.2×3.7)
Piston displacement	cc(cu in)	1975(120.5)
Compression ratio	-	9.4
Rated gross horse power	ps/rpm	50/2450
Maximum gross torque at rpm	kgf·m/rpm	16.3/1600
Engine oil quantity	ℓ (U.S.gal)	4(1.06)
Dry weight	kg(lb)	150(331)
High idling speed	rpm	2700
Low idling speed	rpm	800
Rated fuel consumption	g/ps.hr	-
Starting motor	V-kW	12 - 1.7
Alternator	V-A	13.5 - 90
Battery	V-AH	12 - 60
Fan belt deflection	mm(in)	10~15(0.4~0.6)

2) MAIN PUMP

Item	Unit	Specification
Type	-	Gear
Capacity	cc/rev	27.7
Maximum operating pressure	bar	250
Rated speed (Max/Min)	rpm	2700/500

3) MAIN CONTROL VALVE

Item	Unit	Specification
Type	-	Sectional
Operating method	-	Mechanical
Relief valve pressure(Main/Aux)	bar	200/150
Flow capacity	lpm	95

https://www.forkliftpdfmanuals.com/

4) STEERING UNIT

Item	Unit	Specification
Type	-	Load sensing/Non load reaction/Dynamic signal
Capacity	cc/rev	120
Rated flow	lpm	22.7

5) POWER TRAIN DEVICES

Item				Specification	
Torque converter	Model			ZF 280 27 613/G7	
	Type			3 Element, 1 stage, 2 phase	
	Stall ratio			2.8 : 1	
Transmission	Type			Full auto, Power shift	
	Gear shift(FR/RR)			1/1	
	Control			Electrical single lever type, kick down system	
	Gear ratio		FR	2.444 : 1	
			RR	2.538 : 1	
Axle	Type			Front-wheel drive type, fixed location	
	Gear ratio			6.5 : 1	
	Gear			Ring & pinion gear type	
Wheels	Q'ty(FR/RR)			Single : 2/2	Double : 4/2
	Front	2.0 ~ 2.5TON		Single : 7.0-12-12PR(*)	21×7×15(**)
				Double : 6.0-15-10PR(*)	
		3.0TON		Single : 28×9-15-14PR(*)	21×8×15(**)
				Double : 6.0-15-10PR(*)	
	Rear	2.0 ~ 2.5TON		6.0-9-10PR(*)	16×6×10 1/2(**)
		3.0TON		6.5-10-12PR(*)	16×6×10 1/2(**)
Brakes	Travel			Front wheel, Wet disk brake	
	Parking			Ratchet, band brake type	
Steering	Type			Hydro static, power steering	
	Steering angle(*)			79° to both right and left angle, respectively	

* : 20L/25L/30L-7, 20G/25G/30G-7

** : 20LC/25LC/30LC-7, 20GC/25GC/30GC-7

https://www.forkliftpdfmanuals.com/

4. TIGHTENING TORQUE OF MAJOR COMPONENTS

1) 20L/25L/30L-7, 20G/25G/30G-7

NO	Item		Size	kgf · m	lbf · ft
1	Engine	Engine mounting bolt, nut	M12×1.25	12.3±2.4	8.9±17.4
2		Radiator mounting bolt, nut	M 8×1.25	2.5±0.5	18.1±3.6
3		Torque converter mounting bolt	M10×1.25	6.9±1.4	50±10
4	Hydraulic system	MCV mounting bolt, nut	M10×1.5	6.9±1.4	50±10
5		Steering unit mounting bolt	M10×1.5	4.0±0.5	29±3.6
6	Power train system	Transmission mounting bolt, nut	M16×2.0	7.5	54
7		Drive axle mounting bolt, nut	M20×1.5	62.5±9.5	452±69
8		Steering axle mounting bolt, nut	M20×2.5	58±8.5	420±61
9		Front wheel mounting nut	M20×1.5	40±10	289±72
10		Rear wheel mounting nut	M14×1.5	18±2	130±14
11	Others	Counterweight mounting bolt	M30×3.5	215±33	1555±239
12		Operator's seat mounting nut	M 8×1.25	2.5±0.5	18.1±3.6
13		Head guard mounting bolt	M12×1.75	6.2	44.8

2) 20LC/25LC/30LC-7, 20GC/25GC/30GC-7

NO	Item		Size	kgf · m	lbf · ft
1	Engine	Engine mounting bolt, nut	M12×1.25	12.3±2.4	8.9±17.4
2		Radiator mounting bolt, nut	M 8×1.25	2.5±0.5	18.1±3.6
3		Torque converter mounting bolt	M10×1.25	6.9±1.4	50±10
4	Hydraulic system	MCV mounting bolt, nut	M10×1.5	6.9±1.4	50±10
5		Steering unit mounting bolt	M10×1.5	4.0±0.5	29±3.6
6	Power train system	Transmission mounting bolt, nut	M16×2.0	7.5	54
7		Drive axle mounting bolt, nut	M20×1.5	62.5±9.5	452±69
8		Steering axle mounting bolt, nut	M20×2.5	58±8.5	420±61
9		Front wheel mounting nut	M20×1.5	40±10	289±72
10	Others	Counterweight mounting bolt	M30×3.5	215±33	1555±239
11		Operator's seat mounting nut	M 8×1.25	2.5±0.5	18.1±3.6
12		Head guard mounting bolt	M12×1.75	6.2	44.8

https://www.forkliftpdfmanuals.com/

5. TORQUE CHART

Use following table for unspecified torque.

1) BOLT AND NUT

(1) Coarse thread

Bolt size	8T		10T	
	kgf · m	lbf · ft	kgf · m	lbf · ft
M 6 × 1.0	0.85 ~ 1.25	6.15 ~ 9.04	1.14 ~ 1.74	8.2 ~ 12.6
M 8 × 1.25	2.0 ~ 3.0	14.5 ~ 21.7	2.73 ~ 4.12	19.7 ~ 29.8
M10 × 1.5	4.0 ~ 6.0	28.9 ~ 43.4	5.5 ~ 8.3	39.8 ~ 60
M12 × 1.75	7.4 ~ 11.2	53.5 ~ 79.5	9.8 ~ 15.8	71 ~ 114
M14 × 2.0	12.2 ~ 16.6	88.2 ~ 120	16.7 ~ 22.5	121 ~ 167
M16 × 2.0	18.6 ~ 25.2	135 ~ 182	25.2 ~ 34.2	182 ~ 247
M18 × 2.5	25.8 ~ 35.0	187 ~ 253	35.1 ~ 47.5	254 ~ 343
M20 × 2.5	36.2 ~ 49.0	262 ~ 354	49.2 ~ 66.6	356 ~ 482
M22 × 2.5	48.3 ~ 63.3	350 ~ 457	65.8 ~ 98.0	476 ~ 709
M24 × 3.0	62.5 ~ 84.5	452 ~ 611	85.0 ~ 115	615 ~ 832
M30 × 3.5	124 ~ 168	898 ~ 1214	169 ~ 229	1223 ~ 1655
M36 × 4.0	174 ~ 236	1261 ~ 1703	250 ~ 310	1808 ~ 2242

(2) Fine thread

Bolt size	8T		10T	
	kgf · m	lbf · ft	kgf · m	lbf · ft
M 8 × 1.0	2.17 ~ 3.37	15.7 ~ 24.3	3.04 ~ 4.44	22.0 ~ 32.0
M10 × 1.25	4.46 ~ 6.66	32.3 ~ 48.2	5.93 ~ 8.93	42.9 ~ 64.6
M12 × 1.25	7.78 ~ 11.58	76.3 ~ 83.7	10.6 ~ 16.0	76.6 ~ 115
M14 × 1.5	13.3 ~ 18.1	96.2 ~ 130	17.9 ~ 24.1	130 ~ 174
M16 × 1.5	19.9 ~ 26.9	144 ~ 194	26.6 ~ 36.0	193 ~ 260
M18 × 1.5	28.6 ~ 43.6	207 ~ 315	38.4 ~ 52.0	278 ~ 376
M20 × 1.5	40.0 ~ 54.0	289 ~ 390	53.4 ~ 72.2	386 ~ 522
M22 × 1.5	52.7 ~ 71.3	381 ~ 515	70.7 ~ 95.7	512 ~ 692
M24 × 2.0	67.9 ~ 91.9	491 ~ 664	90.9 ~ 123	658 ~ 890
M30 × 2.0	137 ~ 185	990 ~ 1338	182 ~ 248	1314 ~ 1795
M36 × 3.0	192 ~ 260	1389 ~ 1879	262 ~ 354	1893 ~ 2561

https://www.forkliftpdfmanuals.com/

2) PIPE AND HOSE(FLARE TYPE)

Thread size	Width across flat(mm)	kgf · m	lbf · ft
1/4"	19	4	28.9
3/8"	22	5	36.2
1/2"	27	9.5	68.7
3/4"	36	18	130
1"	41	21	152
1-1/4"	50	35	253

3) PIPE AND HOSE(ORFS TYPE)

Thread size	Width across flat(mm)	kgf · m	lbf · ft
9/16-18	19	4	28.9
11/16-16	22	5	36.2
13/16-16	27	9.5	68.7
1-3/16-12	36	18	130
1-7/16-12	41	21	152
1-11/16-12	50	35	253

4) FITTING

Thread size	Width across flat(mm)	kgf · m	lbf · ft
1/4"	19	4	28.9
3/8"	22	5	36.2
1/2"	27	9.5	68.7
3/4"	36	18	130
1"	41	21	152
1-1/4"	50	35	253

https://www.forkliftpdfmanuals.com/

6. RECOMMENDED LUBRICANTS

Service point	Kind of fluid	Capacity ℓ (U.S.gal)	Ambient temperature °C (°F) -20 (-4) -10 (14) 0 (32) 10 (50) 20 (68) 30 (86) 40 (104)
Engine oil pan	Engine oil	3.9 (1.0)	SAE 10W-30(API SL class or better)
Torque converter transmission	ATF Engine oil	8.5 ℓ (2.2)	ATF DEXRON III
Axle	Gear oil	4 ℓ (1.0)	Mobil Fluid 424
Hydraulic tank	Hydraulic oil	STD : 24.5(6.5) OPT : 30(8.0)	ISO VG32 ISO VG46 ISO VG68
Fuel tank	LPG	-	LPG
	Gasoline	48.2 (12.7)	★Gasoline
Fitting (Grease nipple)	Grease	-	NLGI No.1 NLGI No.2
Brake reservoir tank	Brake oil	0.5 (0.13)	Azola ZS10(Hydraulic oil SAE 10W)
Radiator	Antifreeze:Water 50:50	17 (4.5)	Ethylene glycol base permanent type

★ : 20G/25G/30G-7, 20GC/25GC/30GC-7

NOTES :

① SAE numbers given to engine oil should be selected according to ambient temperature.

② For engine oil used in engine oil pan, use SAE 10W oil when the temperature at the time of engine start up is below 0°C , even if the ambient temperature in daytime is expected to rise to 10°C or more.

https://www.forkliftpdfmanuals.com/

GROUP 3 PERIODIC REPLACEMENT

For operation safety, never fail to perform periodic maintenance or make periodic replacement of the consumable parts listed in the following.
These parts may deteriorate in time and are susceptible to wear. It is difficult to estimate the degree of wear at time of periodic maintenance; therefore, even if no apparent wear is found, always replace with new parts within the prescribed period of replacement(Or earlier if trouble is found).
Note that periodic replacement has nothing to do with guarantee service.

No.	Description	Period of replacement
1	Master cylinder and wheel cylinder caps, dust seals	Every 1 year
2	Brake hose or tube	Every 1 or 2 years
3	Brake reservoir tank and tube	Every 2 to 4 years
4	Power steering hose	Every 2 years
5	Stop lamp switch(Oil pressure type)	Every 2 years
6	Fuel hose	Every 2 to 4 years
7	Rubber parts of power steering	Every 2 to 4 years
8	Lift chain	Every 2 to 4 years
9	Hose of load handling	Every 1 or 2 years

https://www.forkliftpdfmanuals.com/

SECTION 2 REMOVAL AND INSTALLATION OF UNIT

Group 1 Structure ····· 2-1
Group 2 Removal and Installation of Unit ····· 2-2

https://www.forkliftpdfmanuals.com/

SECTION 2 REMOVAL & INSTALLATION OF UNIT

GROUP 1 STRUCTURE

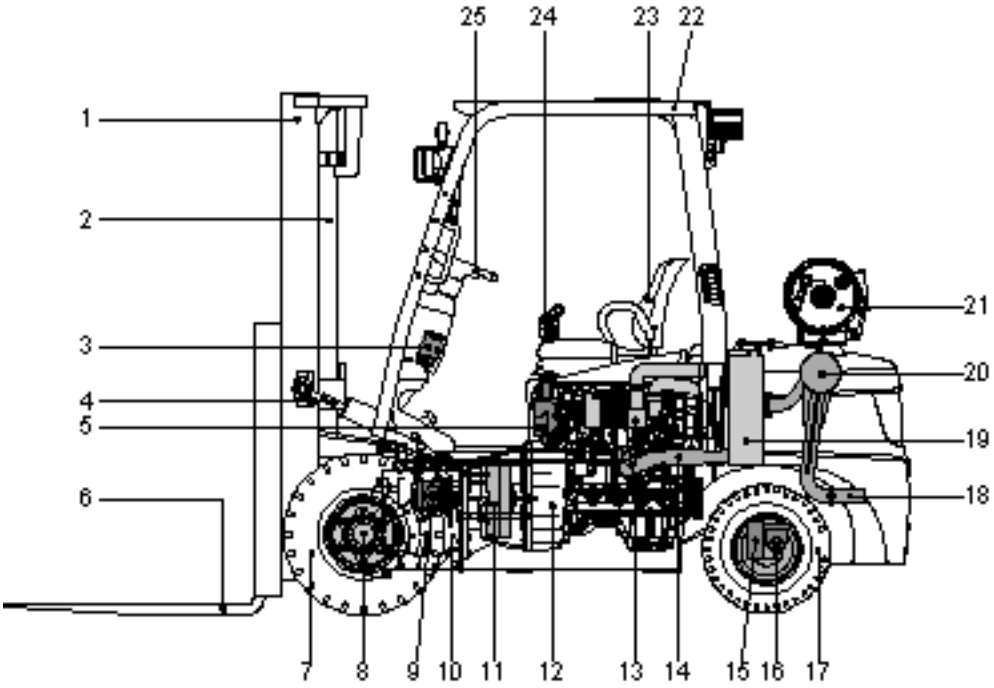

25L7OM23

1	Mast	10	Transmission	19	Radiator
2	Lift cylinder	11	Torque converter	20	Muffler
3	Steering unit	12	Engine	21	LPG tank
4	Tilt cylinder	13	Air cleaner	22	Overhead guard
5	Control valve	14	Exhaust pipe	23	Seat
6	Fork	15	Steering axle	24	Control lever
7	Front wheel	16	Steering cylinder	25	Steering wheel
8	Drive axle	17	Rear wheel		
9	Hydraulic pump	18	Tail pipe		

https://www.forkliftpdfmanuals.com/

SECTION 2 REMOVAL & INSTALLATION OF UNIT

GROUP 1 STRUCTURE

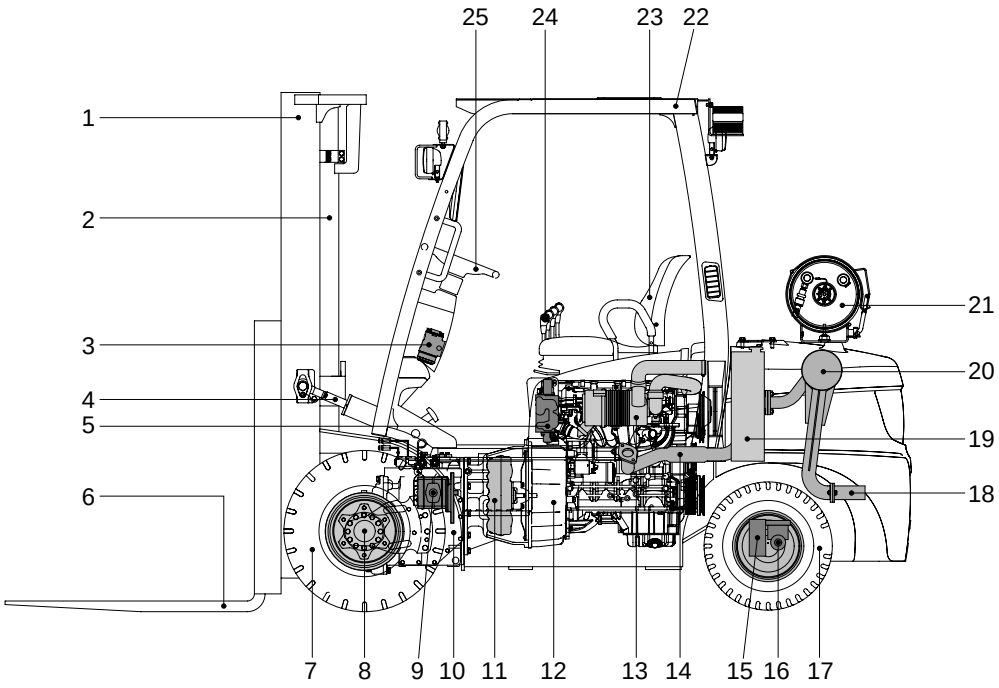

25L7OM23

1	Mast	10	Transmission	19	Radiator
2	Lift cylinder	11	Torque converter	20	Muffler
3	Steering unit	12	Engine	21	LPG tank
4	Tilt cylinder	13	Air cleaner	22	Overhead guard
5	Control valve	14	Exhaust pipe	23	Seat
6	Fork	15	Steering axle	24	Control lever
7	Front wheel	16	Steering cylinder	25	Steering wheel
8	Drive axle	17	Rear wheel		
9	Hydraulic pump	18	Tail pipe		

https://www.forkliftpdfmanuals.com/

GROUP 2 REMOVAL AND INSTALLATION OF UNIT

Remove and install following units as explained in the flow chart.

1. MAST

1) REMOVAL

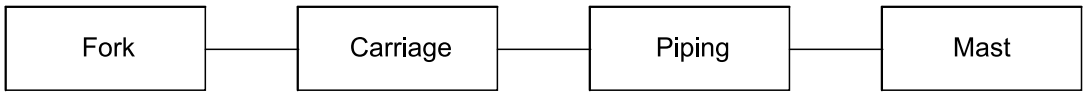

(1) Forks

① Lower the fork carriage until the forks are approximately 25㎜ (1in) from the floor.
② Turn knob up and slide one fork at a time toward the center of the carriage where a notch has been cut in the bottom plate for easy removal.
③ Remove only one fork at a time.
※ On larger forks it may be necessary to use a block of wood.

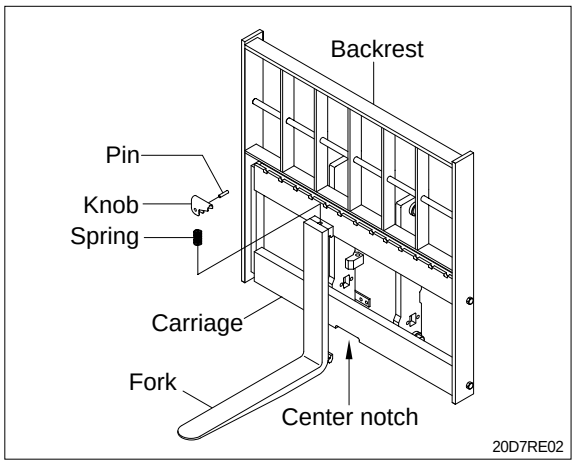

(2) Backrest (If necessary)

① Remove bolts securing backrest to fork carriage. Lift backrest straight up and remove it from carriage.

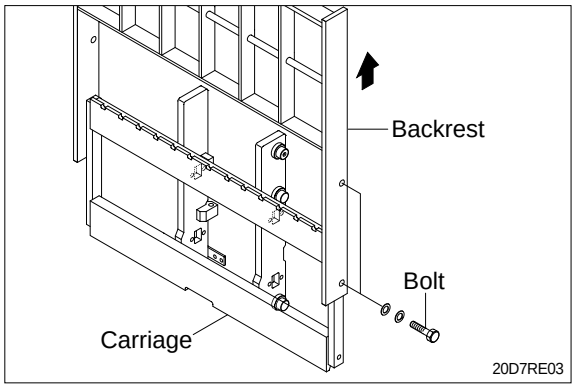

(3) Carriage

① With the mast vertical, raise the carriage high enough to place blocks under the load forks. This is done to create slack in the load chains when the carriage is lowered. Lower the carriage all the way down to the floor. Make sure the carriage is level, this will prevent any binding when the mast is raised.

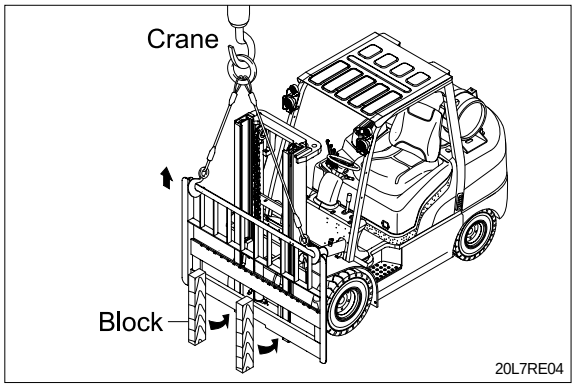

https://www.forkliftpdfmanuals.com/

② While supporting lift chains, remove nuts and split pin from the anchor bolt.

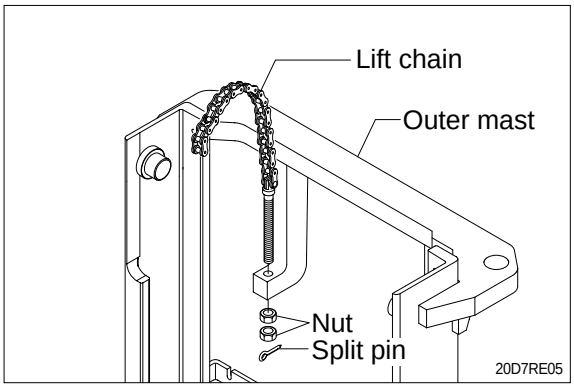

③ Pull the chains out of the sheaves and drape them over the front of the carriage.

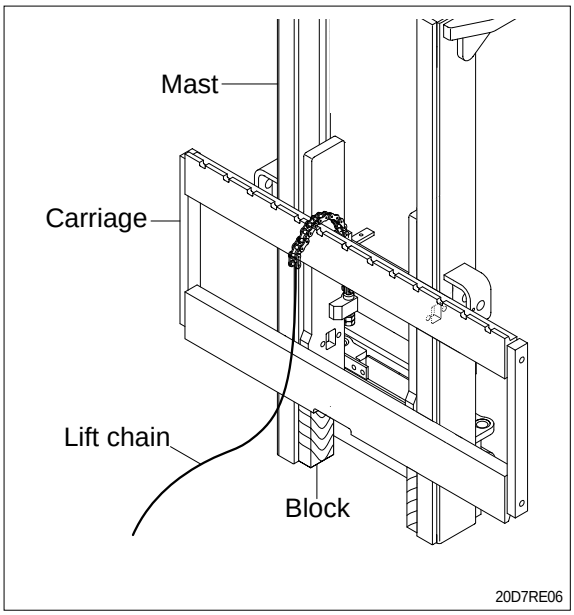

④ Slowly raise inner mast upright until mast clears top of fork carriage. Move carriage to work area and lower the mast.

⚠ **Make sure that carriage remains on floor and does not bind while mast is being raised.**

※ Inspect all parts for wear or damage. Replace all worn or damaged parts.

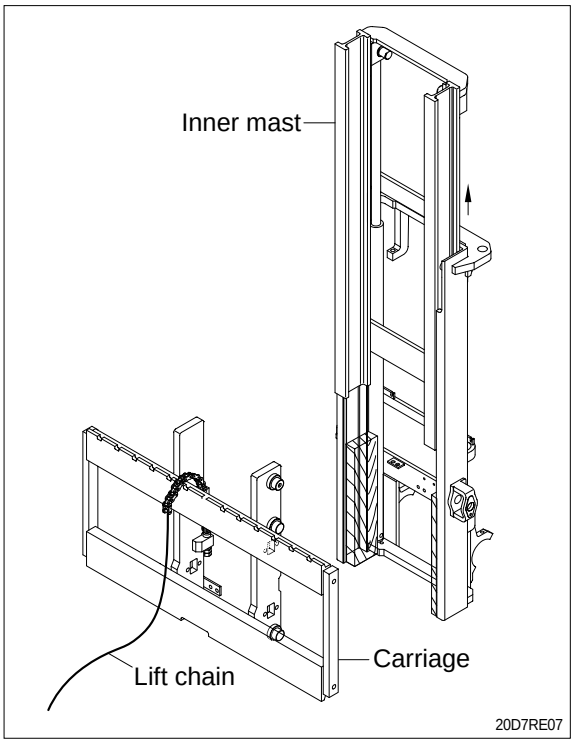

https://www.forkliftpdfmanuals.com/

(4) Piping

① Remove the return hoses and clamps attached to the cylinder.

② Remove hose assembly, valve and tee from the lift cylinder.

※ Put blind plugs in the piping immediately after removing hoses.
This prevents the hydraulic oil from flowing out and also prevents dust and dirt from getting in.

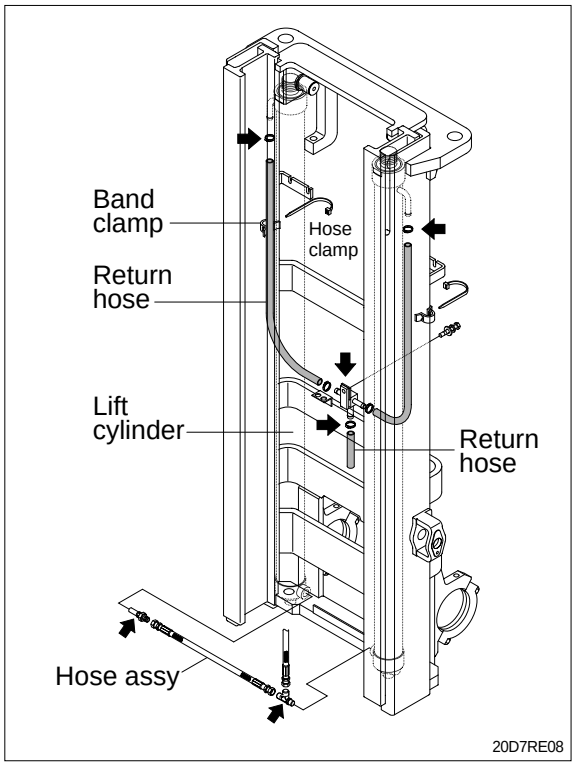

(5) Lift cylinder

① Loosen hexagonal bolts and remove washers securing the lift cylinders to inner mast.

② Bind the lift cylinder with overhead hoist rope and pull up so that the rope has no slack or binding.

⚠ Make sure that the lift cylinder be tightened firmly for safety.

③ Loosen and remove hexagon nuts and clamp securing cylinder to outer mast.

④ Using an overhead hoist, slowly raise the inner mast high enough to clear lift cylinder.

⑤ Using an overhead hoist, draw out lift cylinder carefully and put down on the work floor.

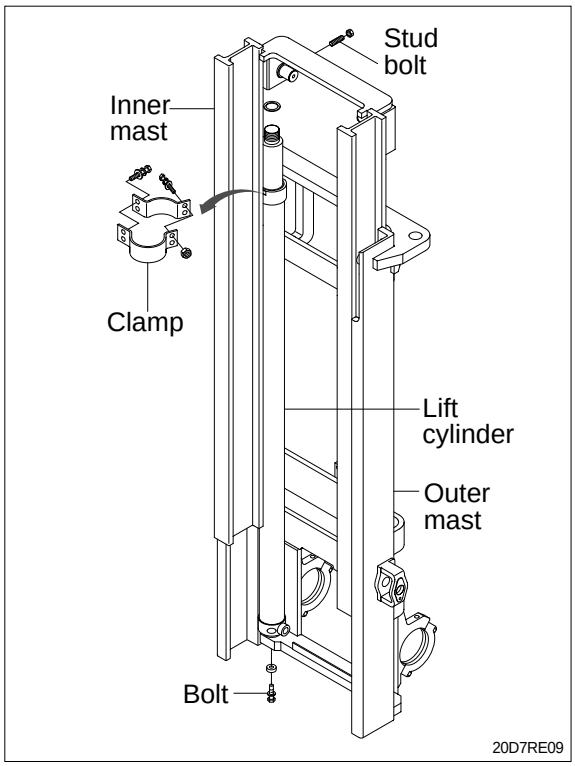

https://www.forkliftpdfmanuals.com/

(6) Inner mast

① Using an overhead hoist raise the inner mast straight and carefully draw out of outer mast section.

⚠ **Be careful the mast not to swing or fall.**

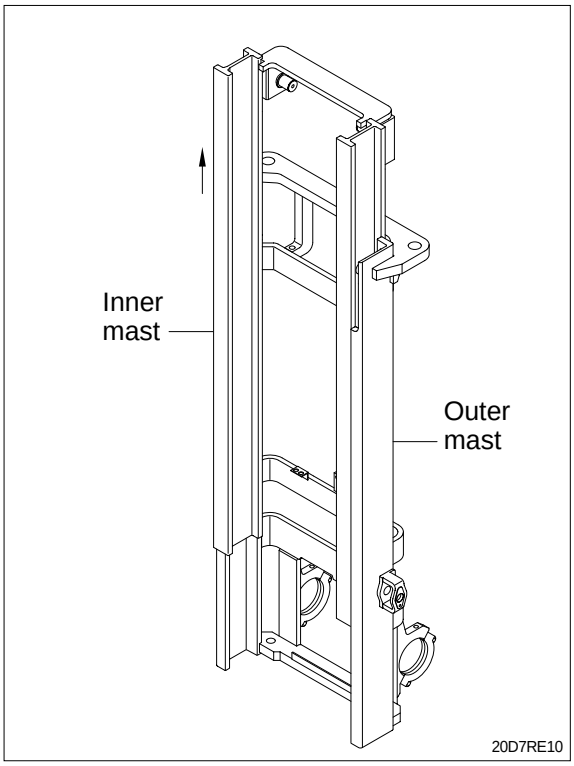

(7) Tilt cylinder pin

(8) Mast support cap

① Attach a crane to the stay at the top of the outer mast, and raise enough to sustain jacked up machine.

※ This operation is carried out from under the machine, so use a pit, or if there is no pit, jack up the machine and loosen with impact wrench.

② Remove the mounting bolts from the cap then slowly raise the outer mast.

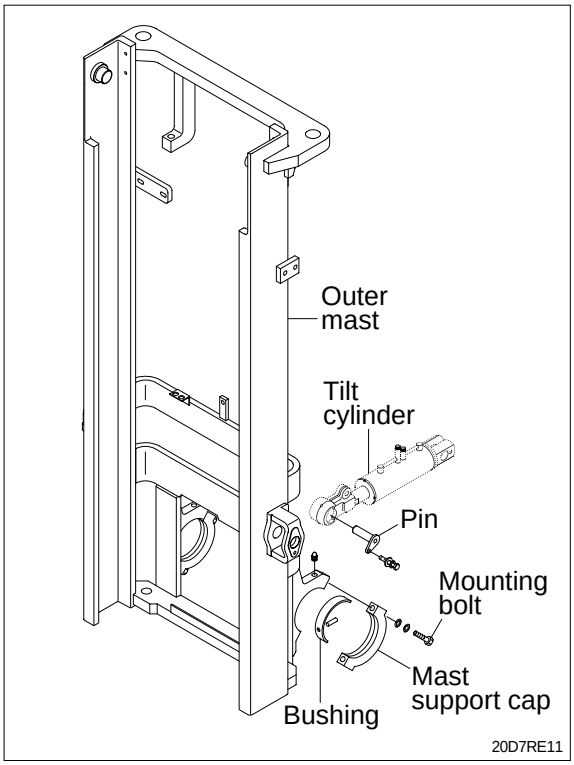

https://www.forkliftpdfmanuals.com/

2) INSTALLATION

After assembling mast components totally without piping connections, install mast assembly to the equipment.

※ Installation procedure for each of mast component is the reverse of the removal procedure.

(1) Mast support cap

① Check the mast support cap and spring pin for wear.

② Jack up the machine so that the front is raised and then using an overhead hoist assemble outer mast to drive axle unit.

③ Tighten mounting bolts to mast support cap. Apply loctite #277.

・Tightening torque : 23.4±3.5kgf・m (169±25.3 lbf・ft)

(2) Tilt cylinder pin

Hold the mast with a crane, operate the tilt control lever and align the holes, then knock the pin.

(3) Lift cylinder installation and adjustment

① Assemble the lift cylinder inside the outer mast, then tighten the stopper bolt. If the cylinder assembly has been replaced, adjust as follows so that the left and right cylinders are synchronized at the maximum lifting height.

② Assemble the cylinder rod to the inner mast, and check the left-to-right play of the mast at the maximum lifting height.

※ If play is to LEFT, install adjustment shim to LEFT cylinder.

※ If play is to RIGHT, install adjustment shim to RIGHT cylinder.

・Shim thickness : 1.0mm (0.04in)

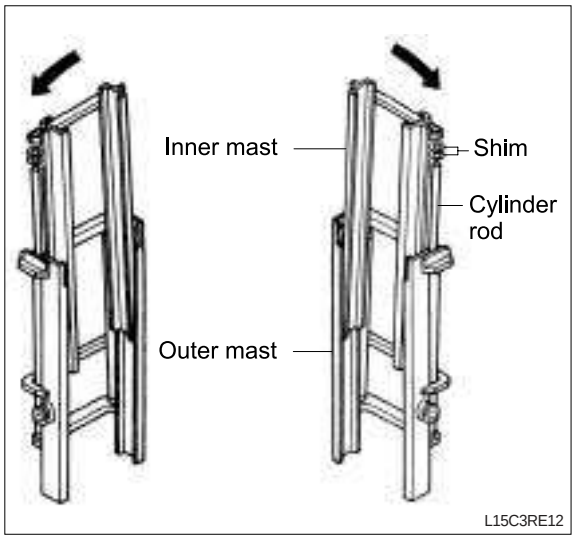

https://www.forkliftpdfmanuals.com/

2. POWER TRAIN ASSEMBLY

1) REMOVAL

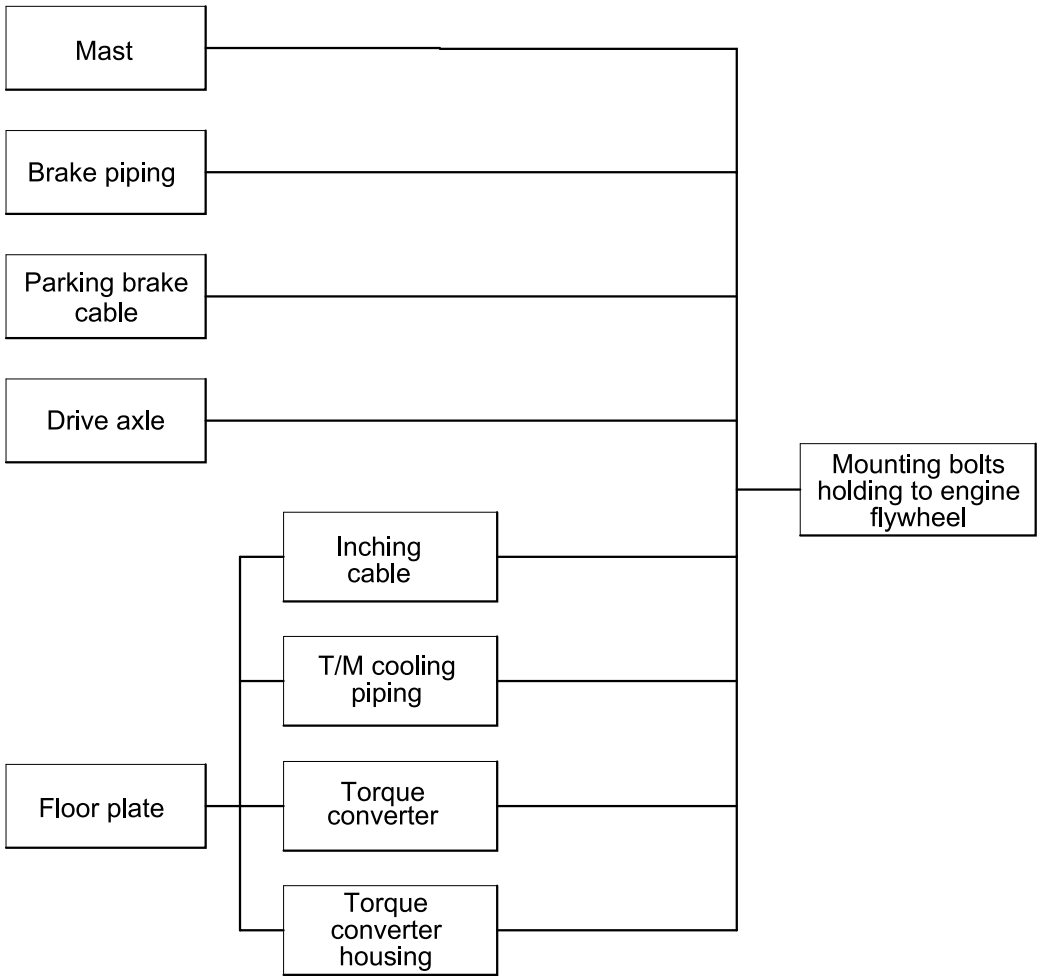

D503RE04

(1) Mast

Refer to the chapter 1. MAST (Page 2-2)

https://www.forkliftpdfmanuals.com/

(2) Brake piping

Disconnect the brake piping from the brake housing of drive axle.

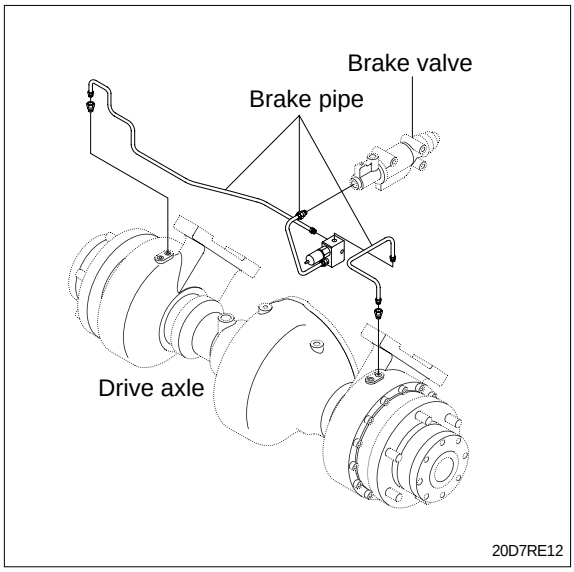

(3) Parking brake cable

Disconnect parking brake cable from the transmission.

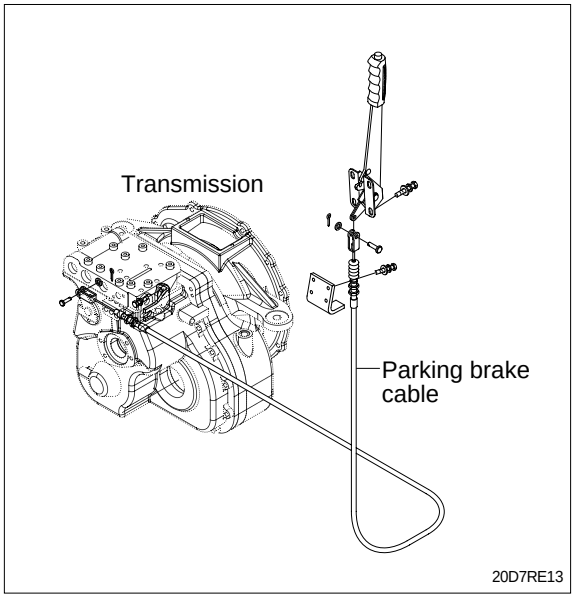

https://www.forkliftpdfmanuals.com/

(4) Drive axle

① Attach a crane to the tilt cylinder notches on the dashboard and raise the machine.
② Loosen hexagonal bolts (1) connection drive axle to the transmission.
③ Put the block under the drive axle and support under the drive axle with a truck.
④ Remove drive axle mount bolts (2) from the frame and then slowly pull out the truck with drive axle to the front.
⑤ Remove drive shaft assy from transmission.

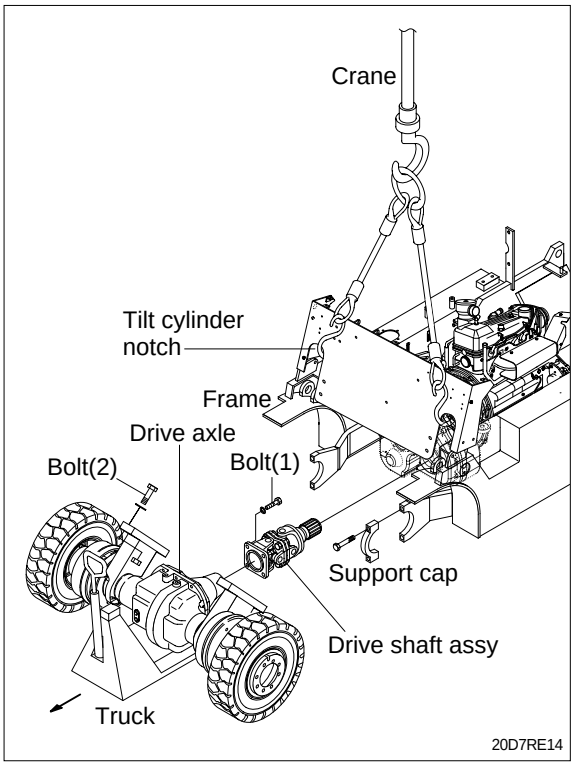

(5) Inching linkage

Remove the clevis pin from the transmission control valve.

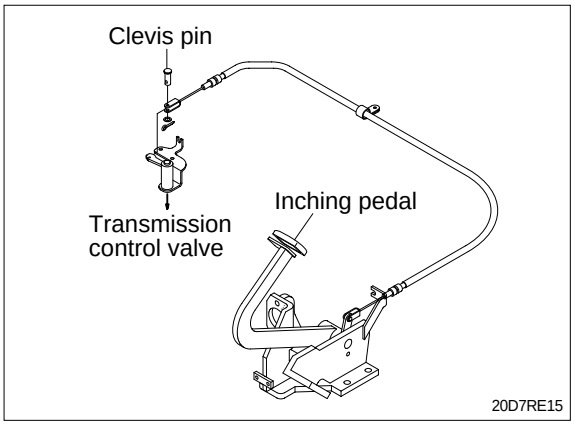

(6) Transmission cooling piping

① Disconnect cooling hose from the transmission.

※ Make sure that the coolant be drained from the hose.

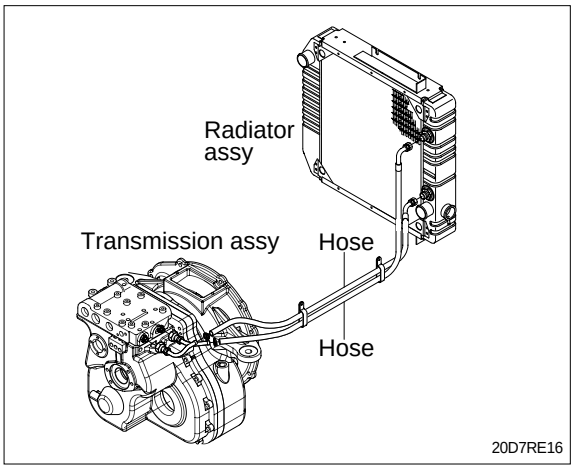

https://www.forkliftpdfmanuals.com/

(7) Torque converter

① Remove the cover on top face of the torque converter housing then remove the 8 mounting bolts installed on the engine flywheel. To rotate the flywheel, remove 1 mounting bolt, then insert a turning tool in the mounting hole. One man must turn the engine fan by hand while the other turns the flywheel.

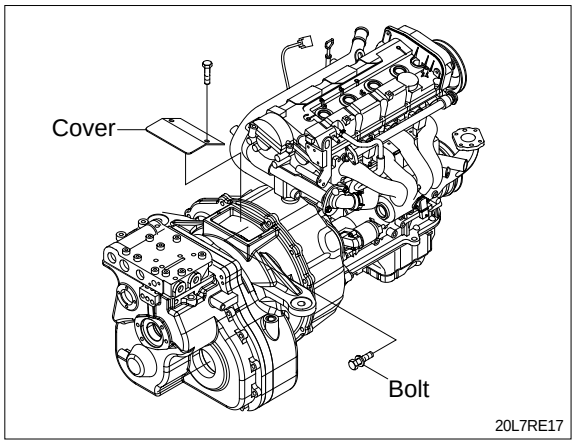

(8) Mounting bolts holding to flywheel housing

① Remove transmission assembly from the engine flywheel housing by loosening the 8 mounting bolts.

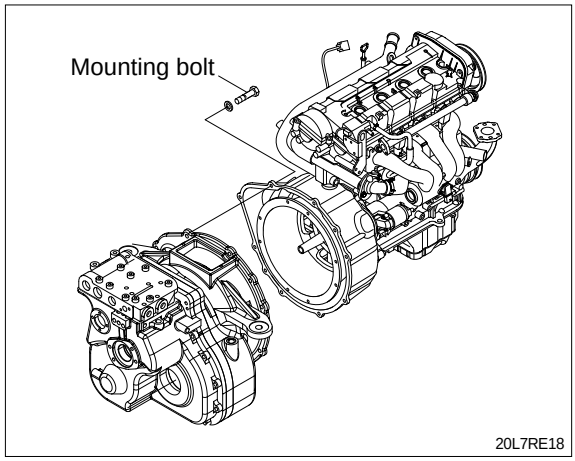

② Using a moving truck slowly pull out transmission assembly to the front.

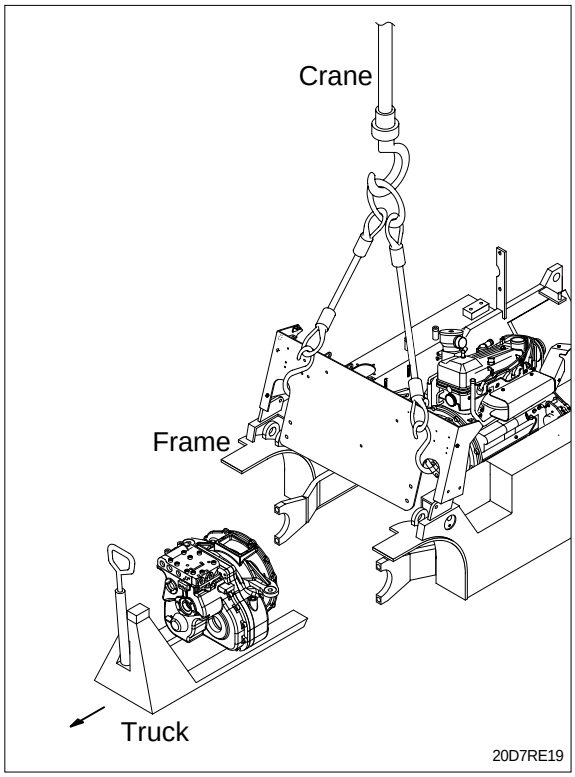

https://www.forkliftpdfmanuals.com/

2) INSTALLATION

(1) Installation is the reverse order to removal, but be careful of the following points.

(2) Tightening torque

- Bolt (1) : 5.5~8.3kgf · m (39.8~60lbf · ft)
- Bolt (2) : 2.7~4.1kgf · m (19.5~29.7lbf · ft)
- Bolt (3) : 5.5~8.3kgf · m (39.8~60lbf · ft)
- Bolt (4) : 53~72kgf · m (383~521lbf · ft)
- Bolt (5) : 7.5kgf · m (54.2lbf · ft)

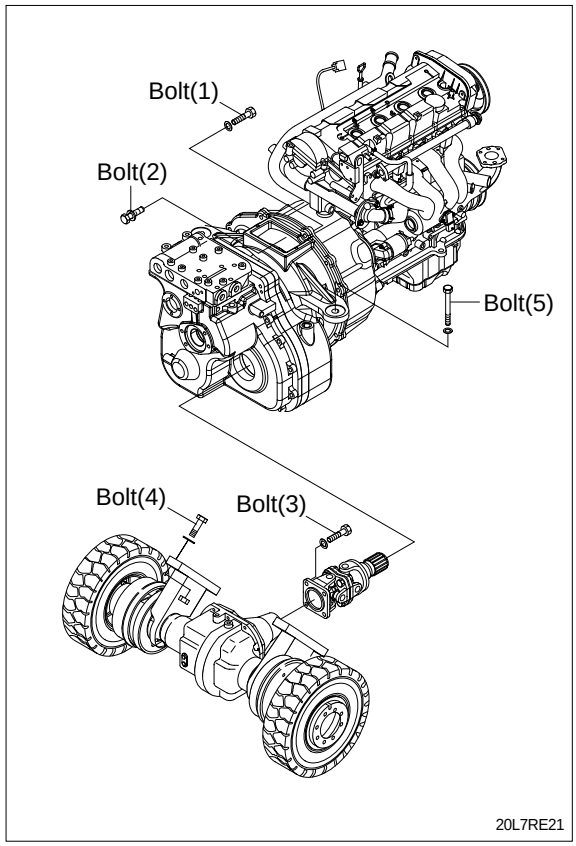

https://www.forkliftpdfmanuals.com/

3. ENGINE

Lever the torque converter, transmission and front axle inside the frame, then remove the engine assembly.

1) REMOVAL

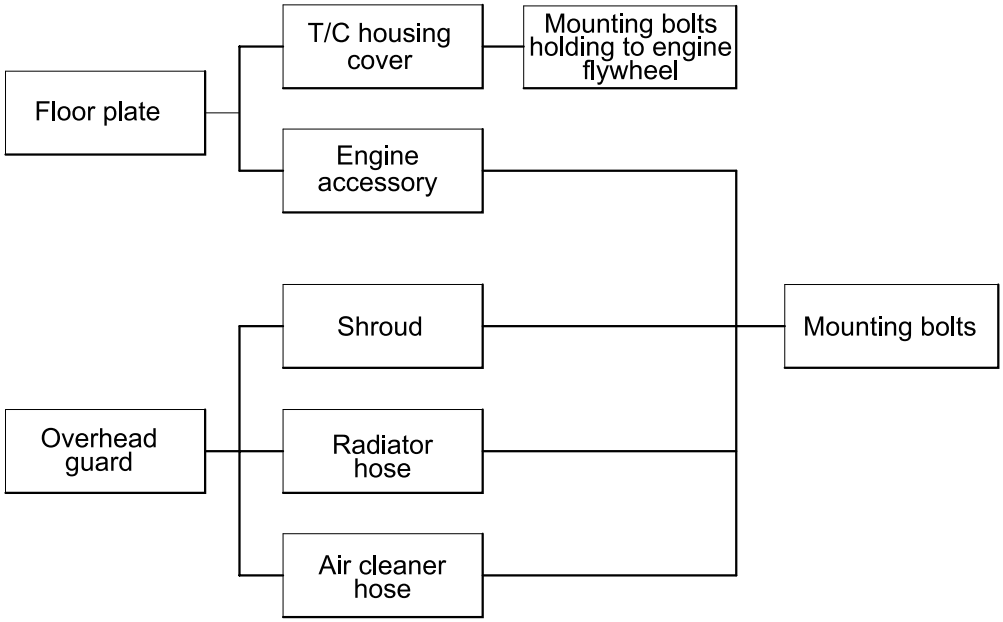

D503RE25

(1) Overhead guard

Remove the wiring for rear combination lamp, working lamp, head lamp and flasher lamp on the stay of the overhead guard and then raise it together with the bonnet.

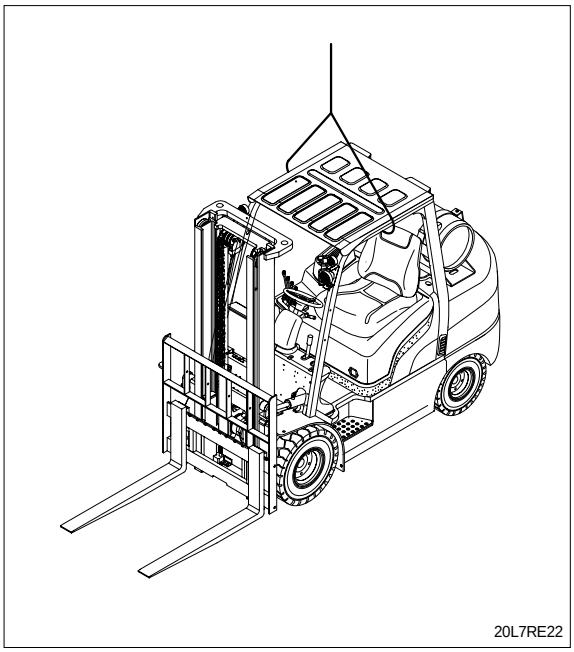

20L7RE22

https://www.forkliftpdfmanuals.com/

(2) Remove the torque converter housing cover, mounting bolts installed to flywheel housing.
For details, see page 2-10.

(3) Engine accessory

Remove all wiring harnesses, cables and hoses around the engine, dashboard and frame.

① Wiring harness to alternator and starter.
② Wiring harness for oil pressure and engine water temperature gauges.
③ Cables for meters, buttons and accelerator pedal.
④ Hoses to fuel tank and air cleaner.
⑤ Exhaust pipe.

(4) Radiator hose

Open the drain valve of the radiator and drain the cooling water, then remove the radiator hose.

(5) Mounting bolt

Attach a crane to the engine hook and raise, then remove mounting bolts. Raise the engine slightly, slide towards the radiator, then lift up.

※ When sliding the engine, be careful of the collision engine and radiator.

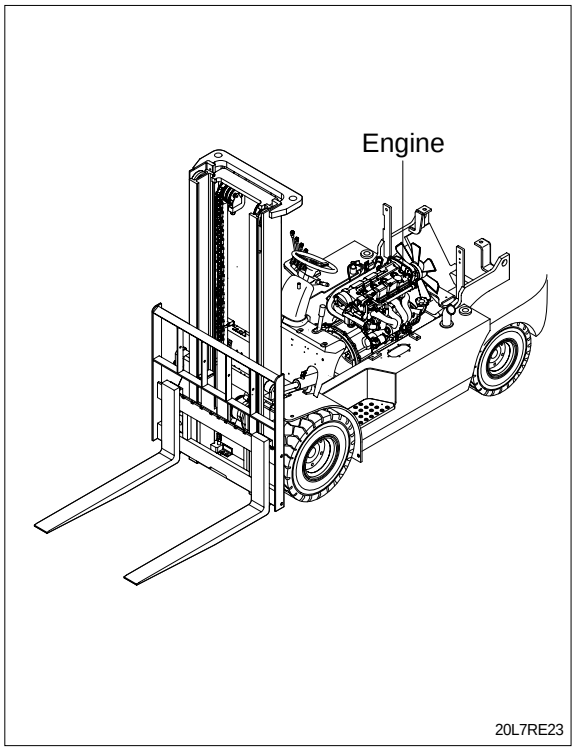

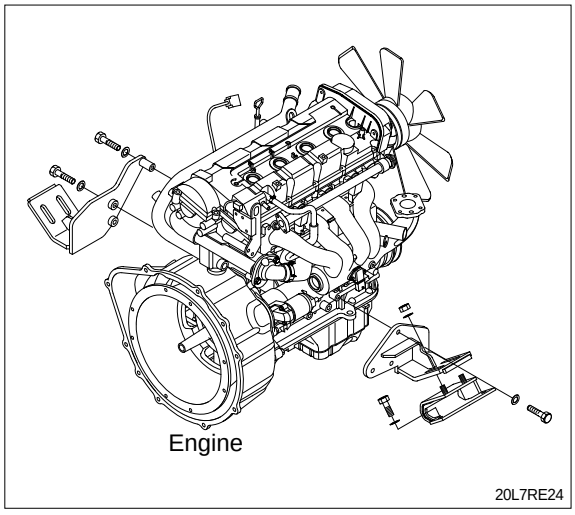

https://www.forkliftpdfmanuals.com/

2) INSTALLATION

Installation is the reverse order of removal, but be careful of the following points.

(1) Tighten the engine mounting bolts and nuts.

(2) Tighten the engine mounting bracket bolts.

※ Do not remove the bolts unless necessary. Loctite is coated over the threads of bolt. So, once the bolts were removed, coat them with loctite (#243) when installing.

※ Before installing the bolts, loctite in the holes should be removed by a tap.

(3) Tightening torque

- Bolt (1) : 11~16 kgf · m (80~116lbf · ft)
- Bolt (2) : 5.5~8.3 kgf · m (39.8~60lbf · ft)
- Bolt (3) : 10~15 kgf · m (72.3~108lbf · ft)
- Bolt (4) : 2.7~4.1kgf · m (19.5~29.7lbf · ft)

(4) Tightening torque of mounting bolt installing to torque converter housing.

- 5.5~8.3kgf · m (40~60lbf · ft)

(5) Radiator hoses

- Distance to insert hose : 35mm (1.4in)

(6) Air cleaner hose

① Insert the air cleaner hose securely and fit a clamp.

② Distance to insert hose

- Air cleaner hose : 35mm (1.4in)
- Engine end : 35mm (1.4in)

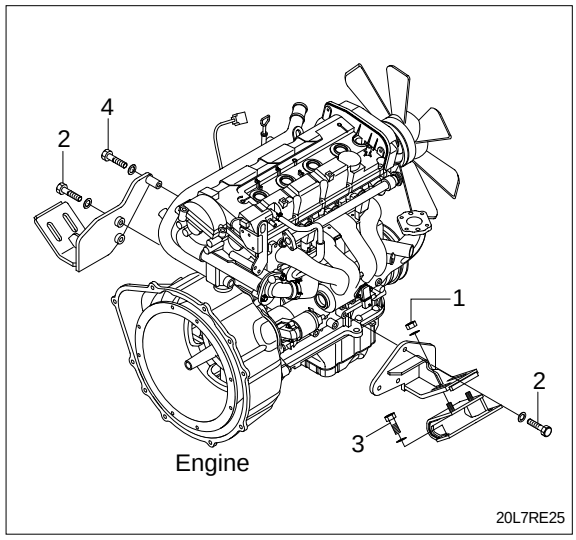

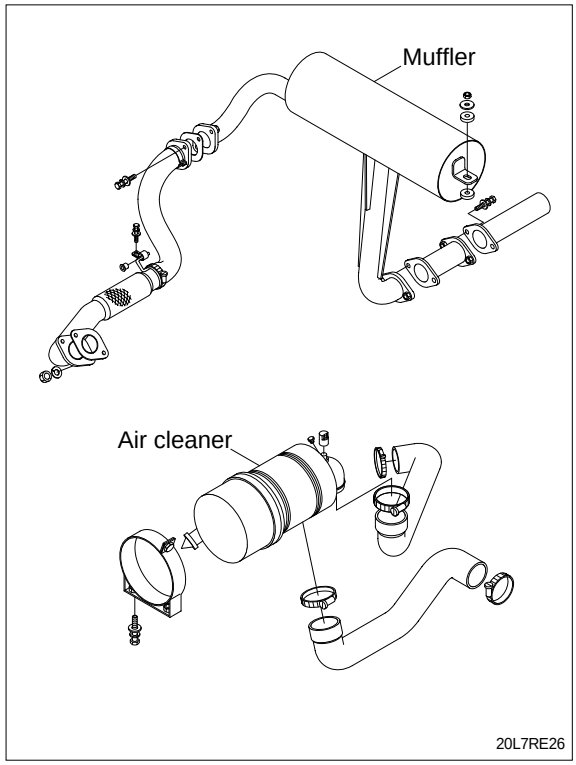

https://www.forkliftpdfmanuals.com/

4. STEERING AXLE

1) REMOVAL

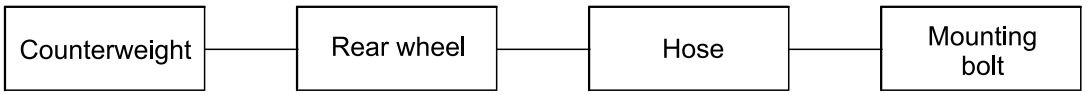

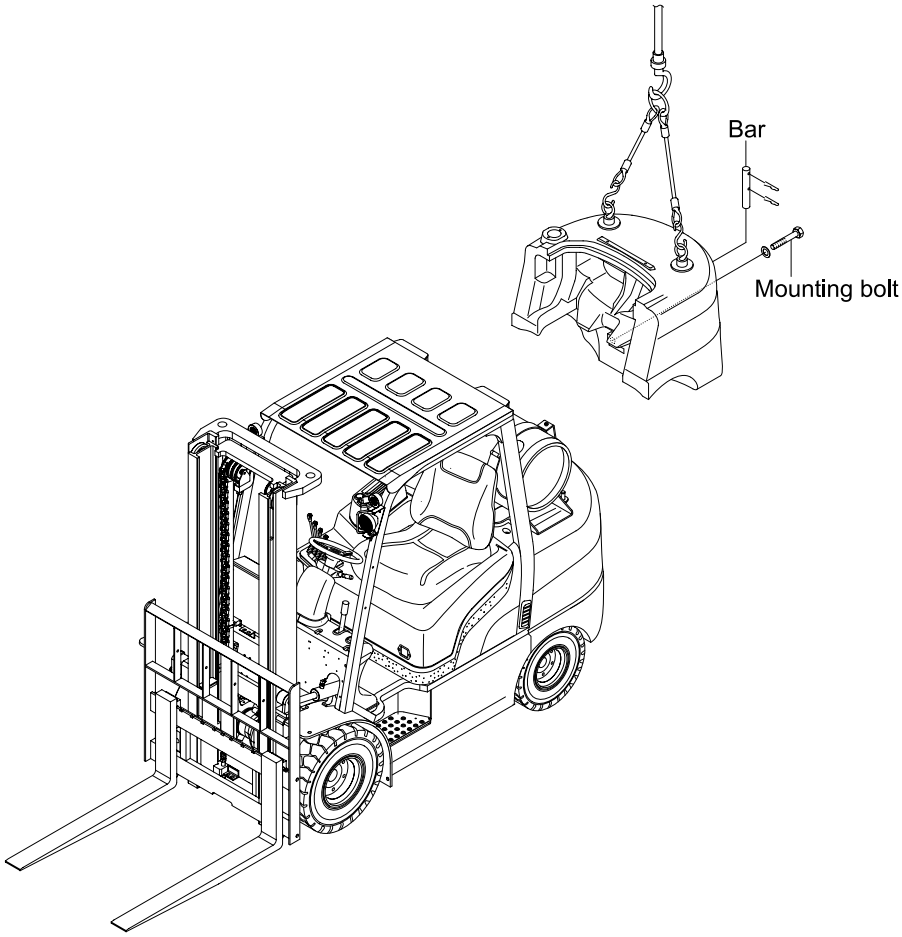

20L7RE27

(1) Counterweight

Hold the counterweight with hoist bars, and raise it with a crane.

Remove the mounting bolts, raise slightly and move it slowly to rear side.

· Weight of counterweight(standard)

20L-7, 20G-7	1100kg (2430lb)	20LC-7, 20GC-7	1030kg (2270lb)
25L-7, 25G-7	1390kg (3060lb)	25LC-7, 25GC-7	1370kg (3020lb)
30L-7, 30G-7	1740kg (3840lb)	30LC-7, 30GC-7	1750kg (3860lb)

https://www.forkliftpdfmanuals.com/

(2) Rear wheel

① 20L/25L/30L-7, 20G/25G/30G-7

Remove mounting bolt and hub nut with socket wrench and then carefully take out the tire assembly.

② 20LC/25LC/30LC-7, 20GC/25GC/30GC-7

Remove cap, split pin and then loosen castle nut.

Take out rear wheel assembly with taper roller bearing and oil seal.

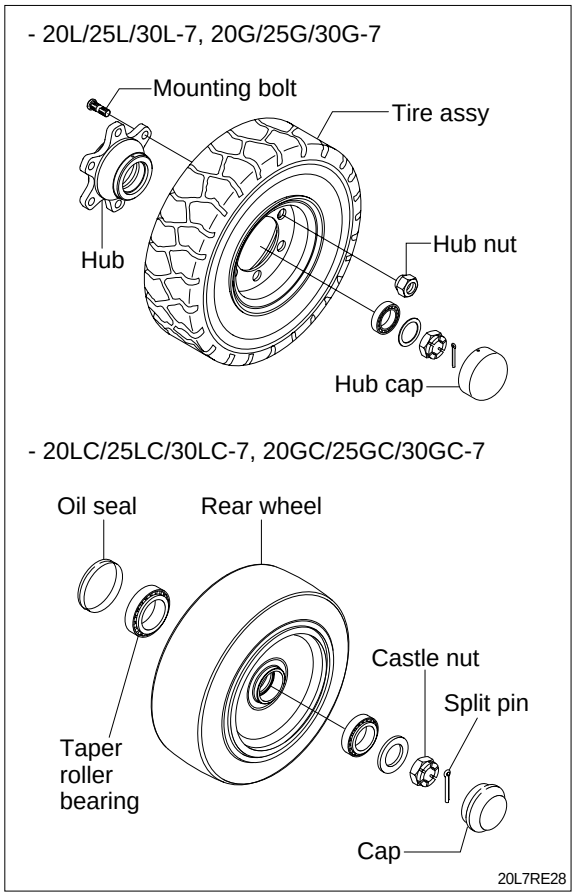

(3) Hose

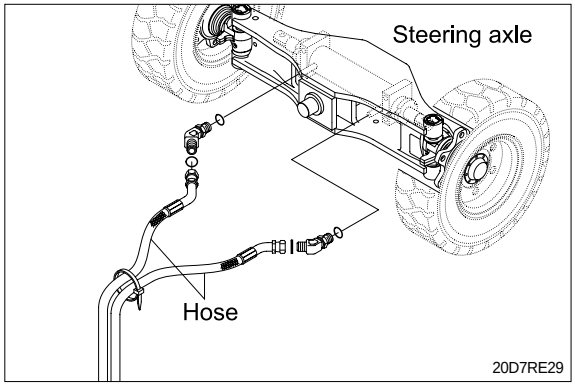

(4) Mounting bolt

Put a block under the steering axle, support on a truck, an raise the frame with a crane. Remove the mounting bolts installing to the frame, and pull out to the rear.

There are shims between the support and steering axle to prevent play.

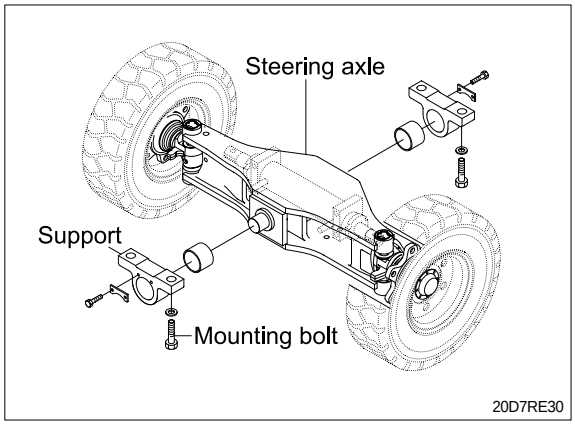

https://www.forkliftpdfmanuals.com/

SECTION 3 POWER TRAIN SYSTEM

Group 1 Structure and Operation ····· 3-1
Group 2 Troubleshooting ····· 3-21
Group 3 Disassembly and Assembly ····· 3-25

https://www.forkliftpdfmanuals.com/

SECTION 3 POWER TRAIN SYSTEM

GROUP 1 STRUCTURE AND OPERATION

1. POWER TRAIN DIAGRAM

1) STRUCTURE

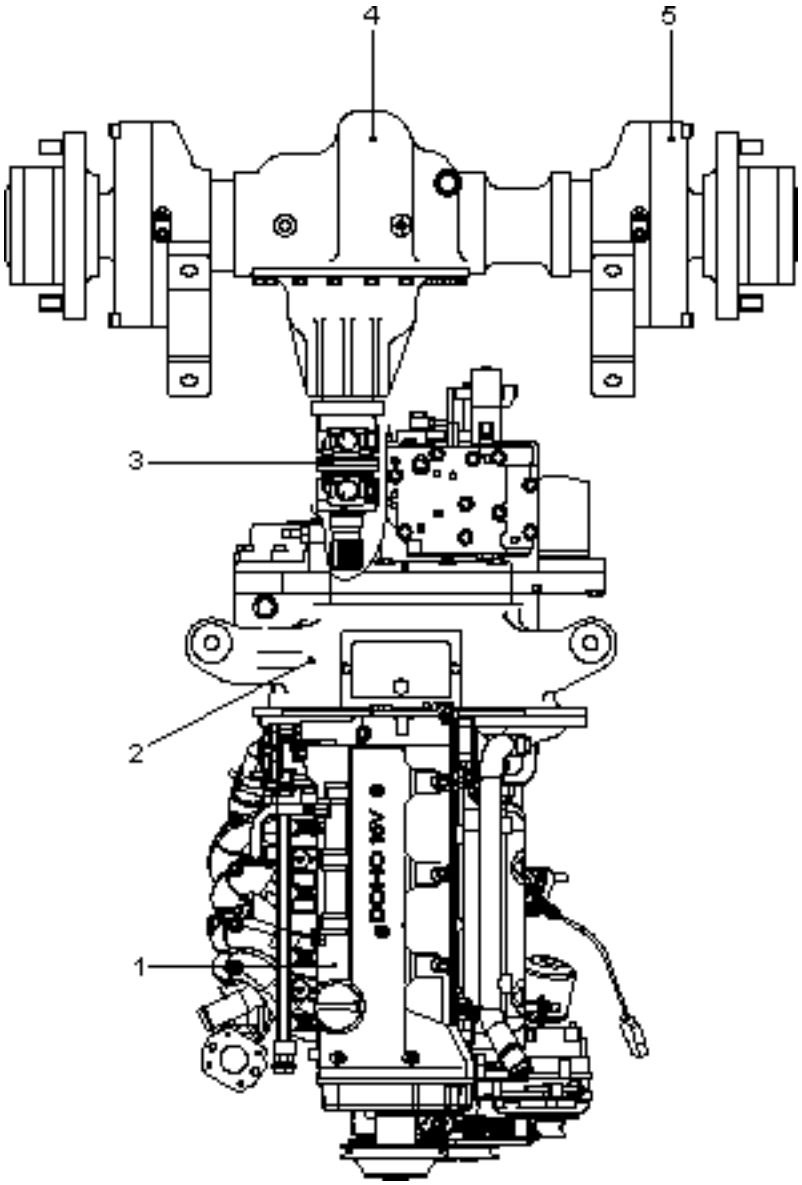

20L7PT26

1	Engine	3	Drive shaft	5	Brake
2	Transmission	4	Drive axle		

https://www.forkliftpdfmanuals.com/

SECTION 3 POWER TRAIN SYSTEM

GROUP 1 STRUCTURE AND OPERATION

1. POWER TRAIN DIAGRAM

1) STRUCTURE

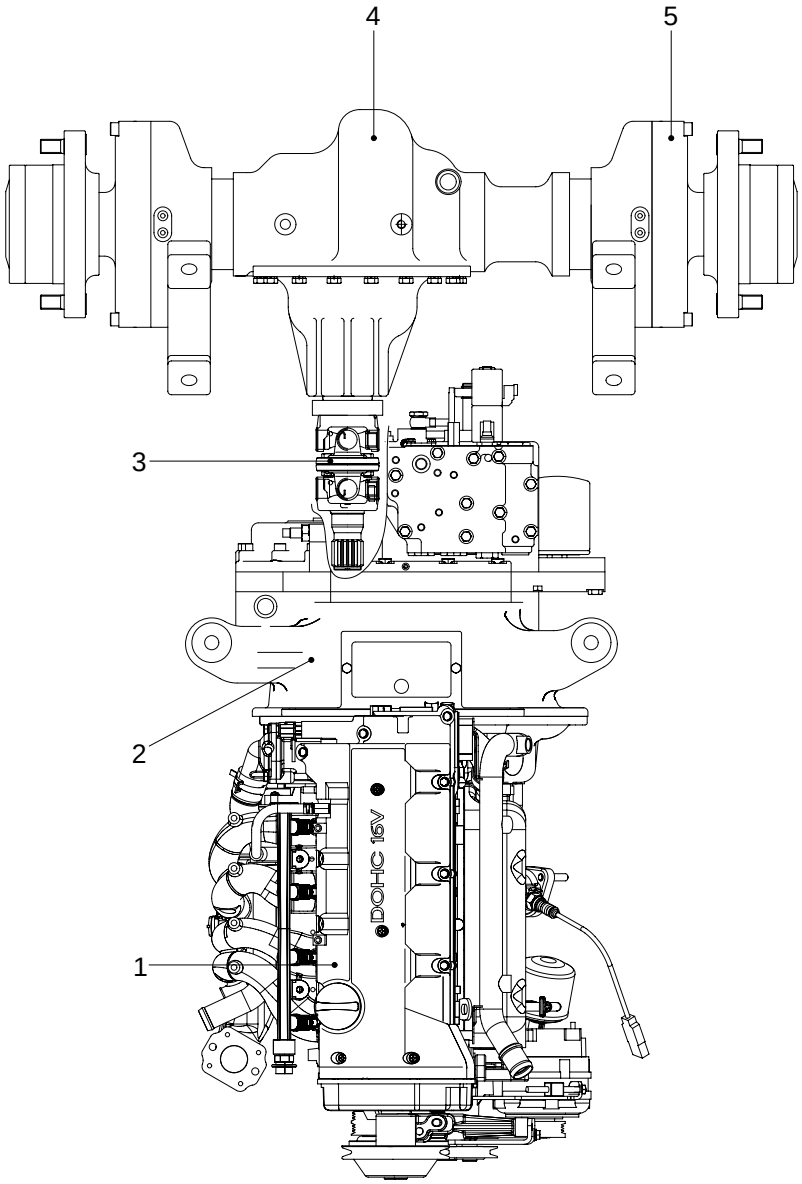

20L7PT26

1	Engine	3	Drive shaft	5	Brake
2	Transmission	4	Drive axle		

https://www.forkliftpdfmanuals.com/

2) SPECIFICATION

Item			Specification	
Torque converter	Model		ZF 280 27 613/G7	
	Type		3 Element, 1 stage, 2 phase	
	Stall ratio		2.8 : 1	
Transmission	Type		Full auto, Power shift	
	Gear shift(FR/RR)		1/1	
	Adjustment		Electrical single lever type, kick down system	
	Gear ratio	FR	2.444 : 1	
		RR	2.538 : 1	
Axle	Type		Front-wheel drive type, fixed location	
	Gear ratio		6.5 : 1	
	Gear		Ring & pinion gear type	
Wheels	Q'ty(FR/RR)		Single : 2/2	Double : 4/2
	Front	2.0 ~ 2.5TON	Single : 7.0-12-12PR(*)	21×7×15(**)
			Double : 6.0-15-10PR(*)	
		3.0 TON	Single : 28×9-15-14PR(*)	21×8×15(**)
			Double : 6.0-15-10PR(*)	
	Rear	2.0 ~ 2.5TON	6.0-9-10PR(*)	16×6×10 1/2(**)
		3.0TON	6.5-10-12PR(*)	16×6×10 1/2(**)
Brakes	Travel		Front wheel, Wet disk brake	
	Parking		Ratchet, band brake type	
Steering	Type		Hydro static, power steering	
	Steering angle(*)		79° to both right and left angle, respectively	

* : 20L/25L/30L-7, 20G/25G/30G-7

** : 20LC/25LC/30LC-7, 20GC/25GC/30GC-7

https://www.forkliftpdfmanuals.com/

2. TORQUE CONVERTER

1) STRUCTURE

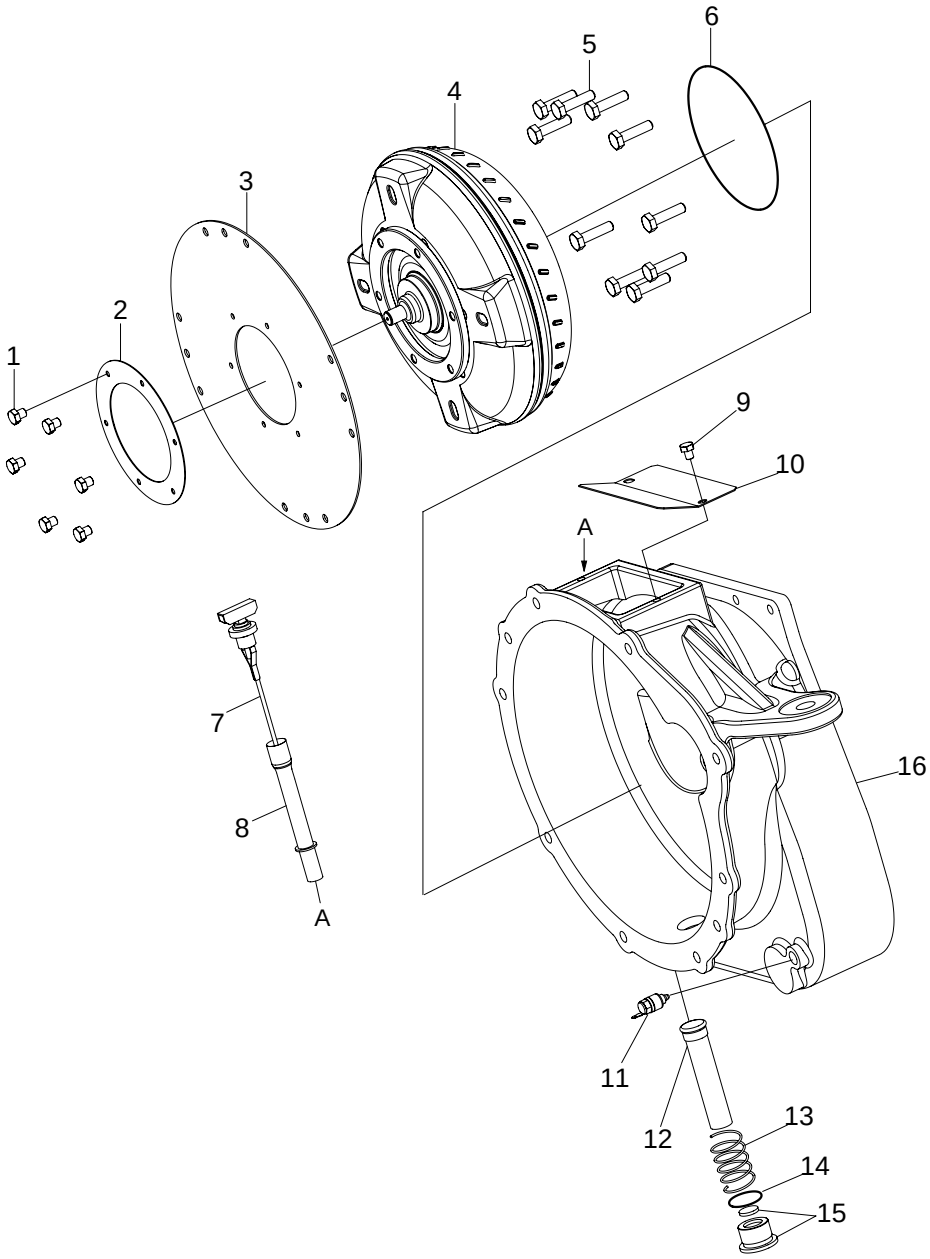

20D7PT03

1	Bolt	9	Bolt
2	Plate	10	Torque converter housing cover
3	Flexible plate	11	Temperature sensor
4	Torque converter assembly	12	Inner oil strainer
5	Bolt	13	Oil strainer spring
6	O-ring	14	O-ring
7	Oil level gauge	15	Oil strainer plug
8	Oil level gauge guide	16	Torque converter housing

https://www.forkliftpdfmanuals.com/

2) OPERATION

The torque converter is connected with a flywheel by a flexible plate, engine output is delivered from the flywheel to the flexible plate.

The exterior of the torque converter is protected by the torque converter housing.

The torque converter housing forms the oil path for the oil pump, it includes the oil strainer filtering sucked oil through this oil path and the oil level gauge measuring oil level of the transmission inside.

3) TORQUE CONVERTER HYDRAULIC CIRCUIT

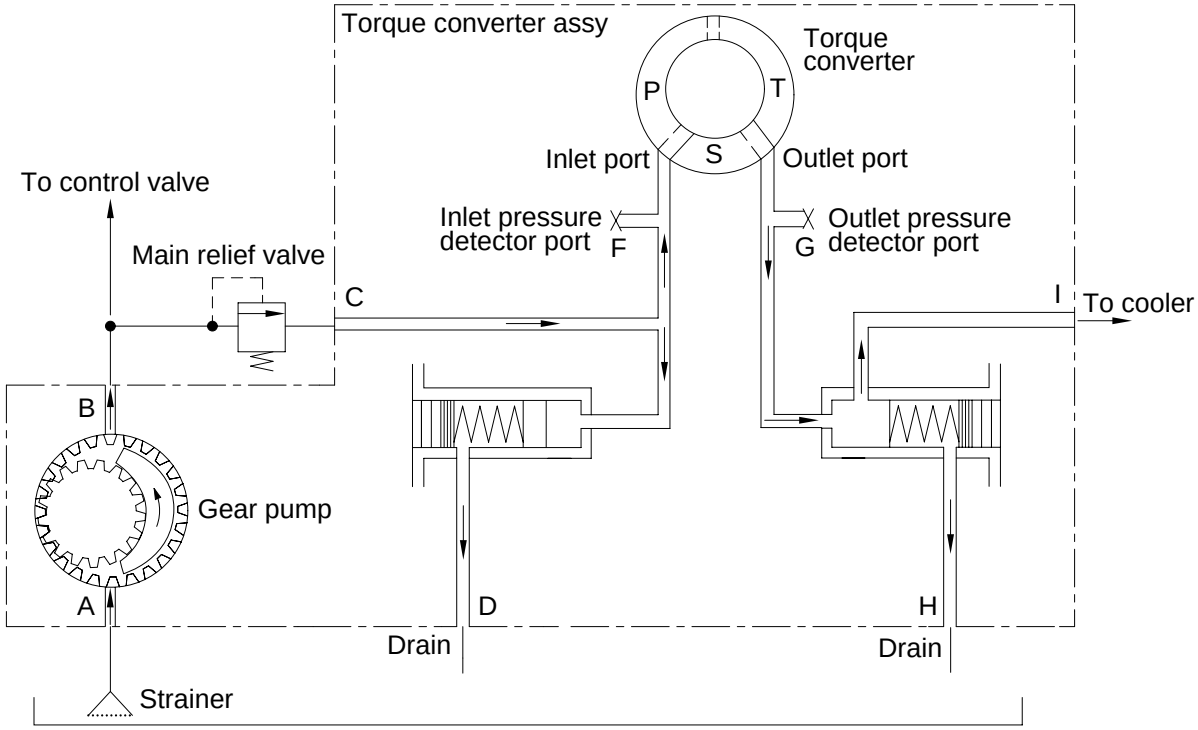

20D7PT04

https://www.forkliftpdfmanuals.com/

3. TRANSMISSION

1) STRUCTURE

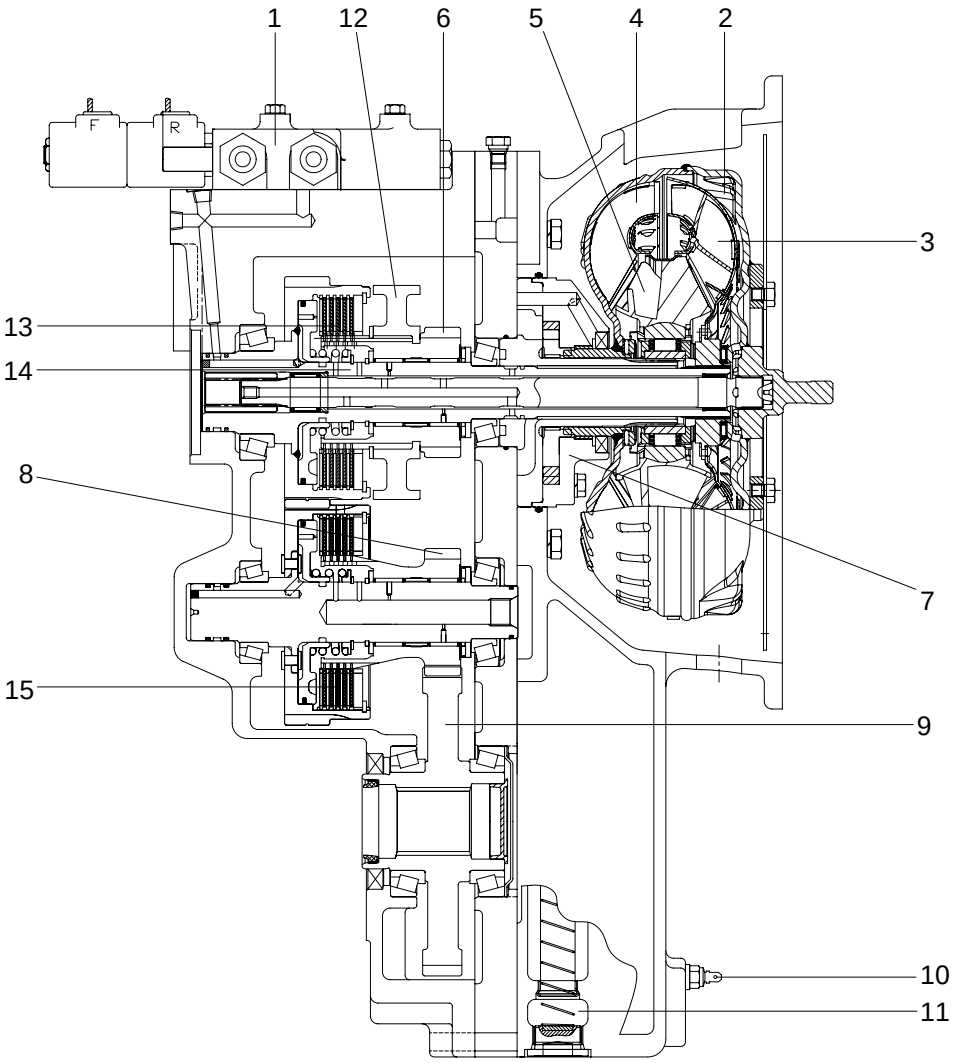

20D7PT28

1	Control valve	9	Output gear
2	Torque converter	10	Temperature sensor
3	Turbine shaft	11	Oil input path
4	Impeller shaft	12	Parking drum
5	Stator	13	Forward clutch
6	Forward clutch gear	14	Input shaft
7	Oil pump	15	Reverse clutch
8	Reverse clutch gear		

https://www.forkliftpdfmanuals.com/

2) INSTALLATION VIEW

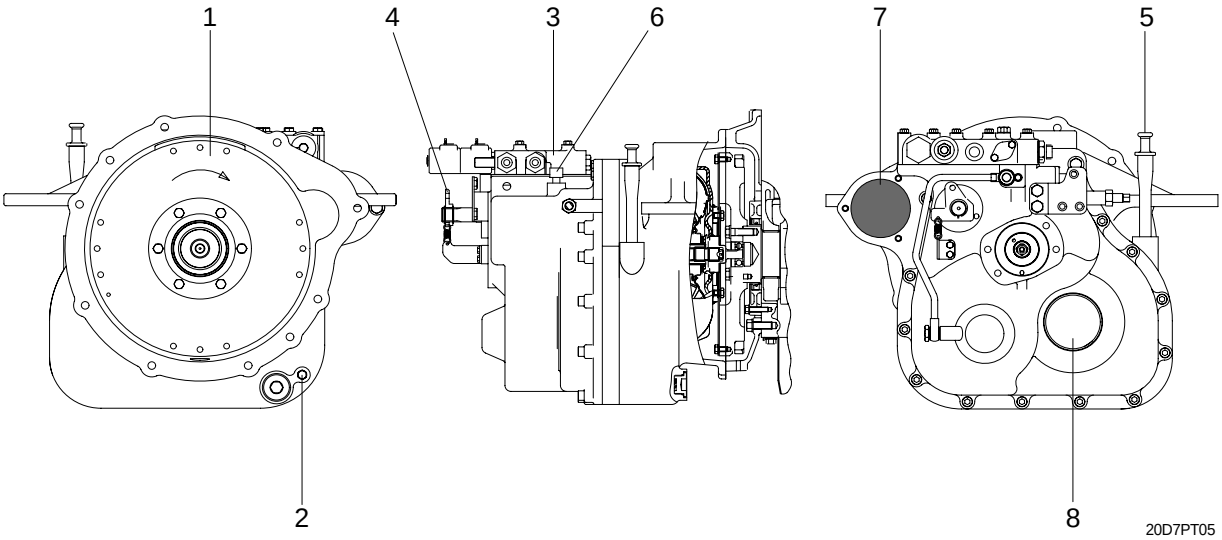

1 Torque converter
2 Temperature sensor
3 Control valve
4 Parking brake link lever
5 Oil level pipe and dipstick
6 Air breather
7 Transmission oil filter
8 Transmission output (Universal joint link part)

3) OPERATION

The flywheel of engine transmits a power to torque converter through flexible plate.

The torque converter consists of an impeller wheel connected to the input side, a turbine connected to the output side and a stator wheel.

The power delivered from engine make the impeller wheel of the torque converter revolve, an impeller blade generate a fluid energy through being full of fluid in torque converter, this energy give torque to turbine wheel.

Flow of the fluid flowing through revolving turbine wheel is changed by stator, this course causes opposite torque at stator and it is added to the turbine.

As the result of this, the output torque brings torque increase within the compass of stall capability.

When the truck starts running or goes to the uphill, a torque converter transmits a torque increased against engine torque to power transmission system of the transport.

When the truck runs at regular speed without increase speed, high torque is not required and output torque is gradually reduced.

Since the engine and transmission are connected through the fluid, return vibrations and shocks from the drive axle is absorbed, safety of the transmission is secured.

Whether or not the truck travels, the engine continually operates and torque is converted automatically according to load.

This system makes the drive operation much easier and work can be performed much more efficiently.

Output power of the torque converter is transmitted to the input shaft, forward clutch or a reverse clutch works according to gear choice of a driver.

The clutch power chosen at this time is connected to the output gear through the clutch gear.

https://www.forkliftpdfmanuals.com/

4) OPERATING MODES

(1) Forward

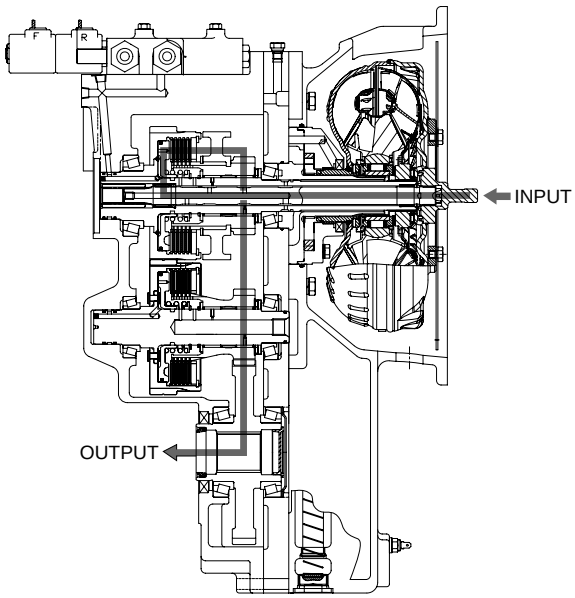

20D7PT29

(2) Reverse

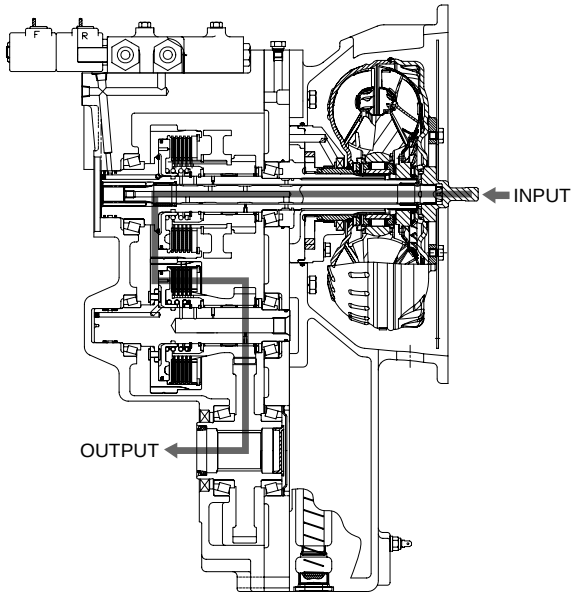

20D7PT30

https://www.forkliftpdfmanuals.com/

5) OIL PUMP AND SPACER

(1) Structure

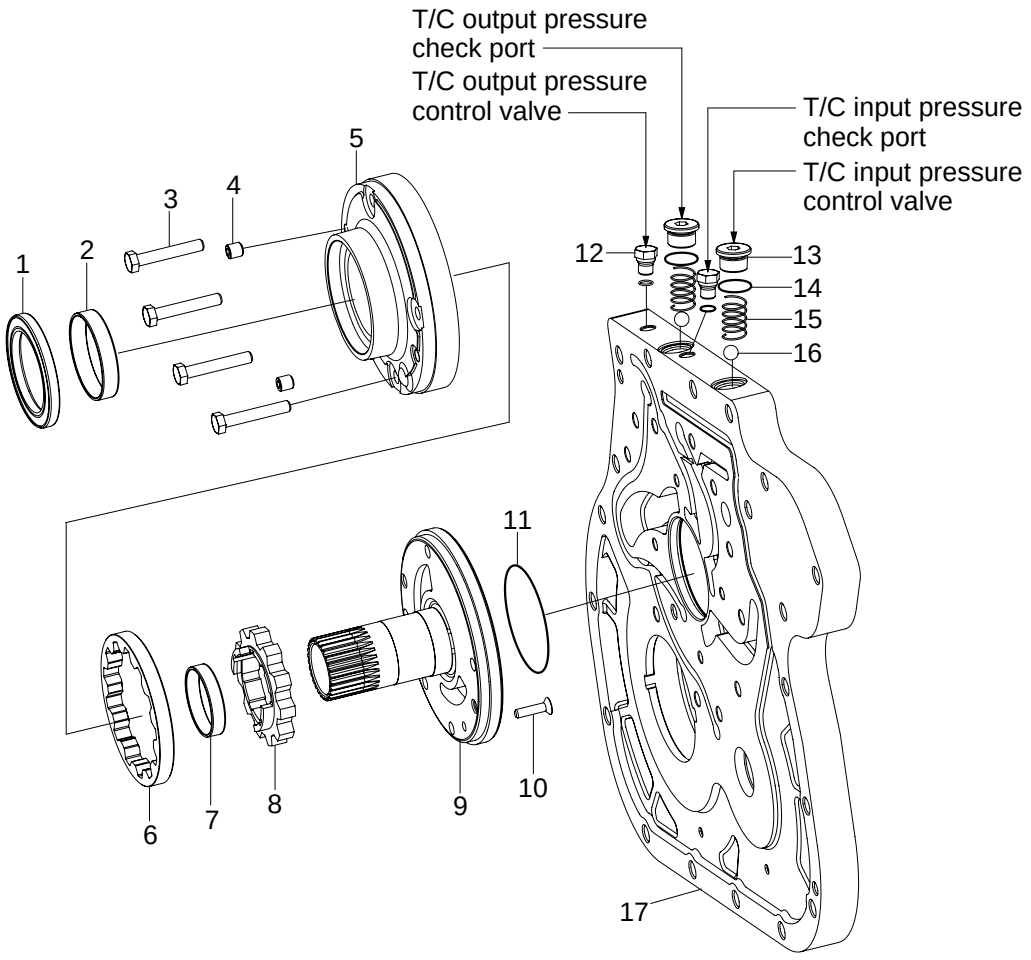

1	Oil seal	10	Lock bolt
2	Oil pump case bush	11	O-ring
3	Bolt	12	Bolt
4	Plug	13	Plug
5	Oil pump case	14	O-ring
6	Driven gear	15	Spring
7	Drive gear bush	16	Ball
8	Drive gear	17	Spacer
9	Stator shaft		

(2) Operation

The oil pump is located on the spacer side. It is in charge of the function of clutching internal oil of the transmission through control valve and the function of sucking oil for oil supply of the torque converter and lubrication function of a clutch.

Oil pump choose gear pump, supplies oil in control valve and torque converter through the oil path between a spacer and a transmission case.

The relief valve located on the top of a spacer can maintain regularly input oil pressure and output oil pressure.

https://www.forkliftpdfmanuals.com/

6) TRANSMISSION CASE, CONTROL VALVE, OIL PUMP AND PARKING BRAKE

(1) Structure

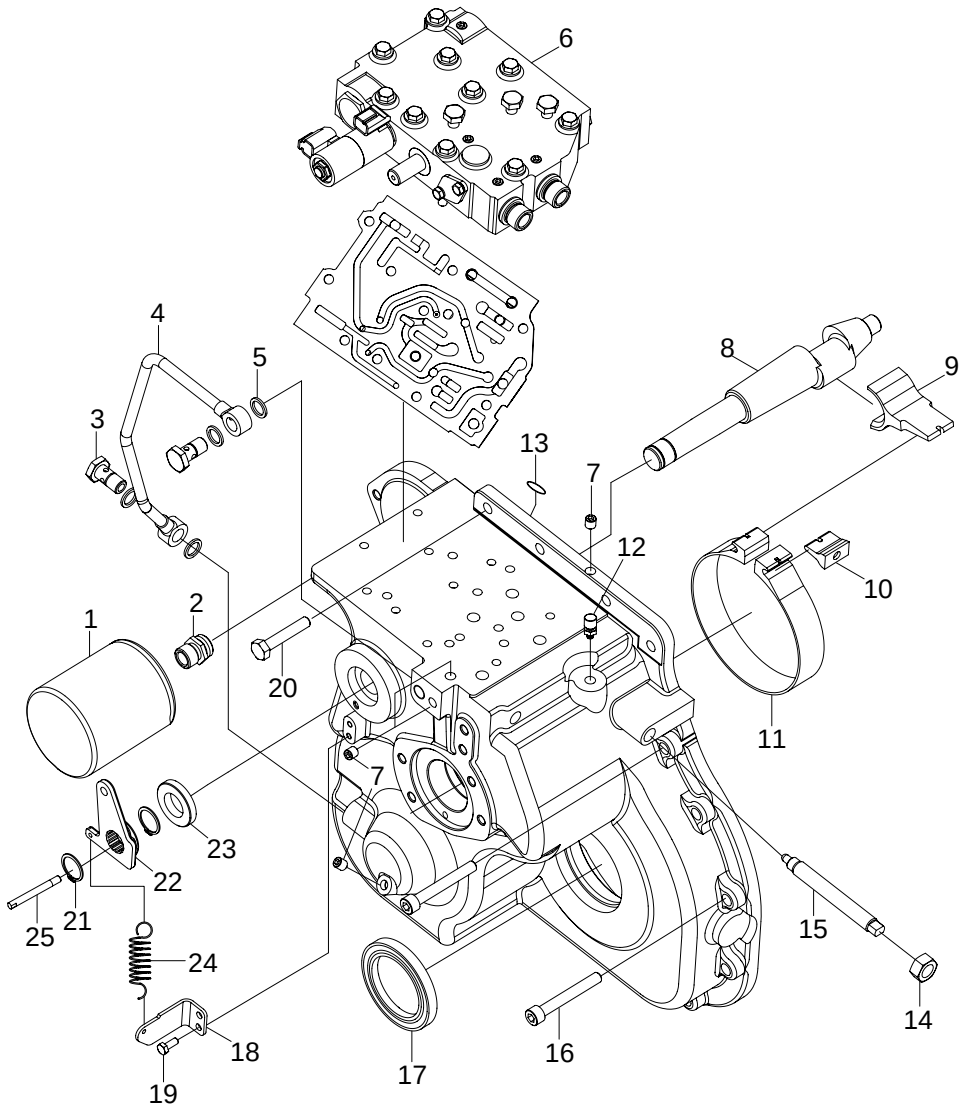

20D7PT07

1	Oil filter	10	Parking brake connector (Small)	18	Parking bracket
2	Oil filter bolt	11	Band brake	19	Bolt
3	Bolt	12	Air breather	20	Bolt
4	Pipe	13	O-ring	21	Snap ring
5	Washer	14	Nut	22	Parking lever
6	Control valve	15	Parking brake control shaft	23	Oil seal
7	Plug	16	Bolt	24	Parking return spring
8	Cam shaft	17	Oil seal	25	Stoper pin
9	Parking brake connector (Large)				

https://www.forkliftpdfmanuals.com/

(2) Operation

The transmission case includes the function of a control valve, an oil filter and a parking brake.

The oil filter is charge of filtering sucked oil by an oil pump before transmitting sucked oil to a control valve and a torque converter.

Oil transmitted through an oil filter delivers oil pressure to the piston of the forward and reverse clutch through the solenoid valve.

At this time, the solenoid valve is in charge of the important function of transmitting oil pressure for forward and reverse through an electric signal by the forward and reverse selection lever of the truck.

Oil pressure chosen for forward or reverse by the solenoid valve is transmitted to the forward clutch through the formed oil path between transmission case or the reverse clutch through the pipe of transmission outside.

Parking brake works by the band brake installed on parking drum which is linked to the output shaft of the forward clutch.

https://www.forkliftpdfmanuals.com/

7) CONTROL VALVE

(1) Structure

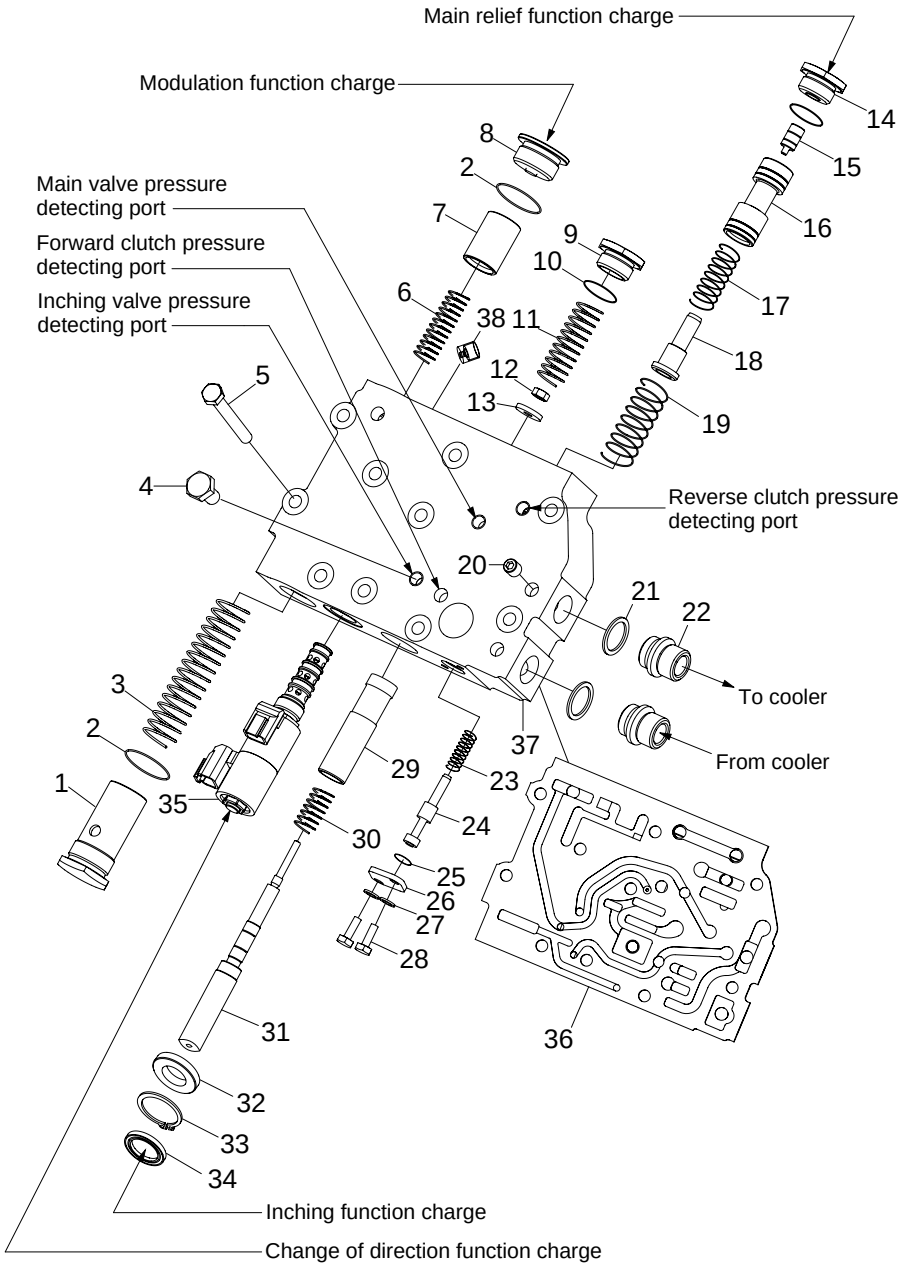

20D7PT08

1	Stoper	10	O-ring	20	Plug	29	Valve
2	O-ring	11	Spring	21	Washer	30	Spring
3	Spring	12	Nut	22	Nipple	31	Spool
4	Plug	13	Stoper	23	Spring	32	Plate
5	Bolt	14	Plug	24	Valve	33	Snap ring
6	Spring	15	Piston	25	O-ring	34	Oil seal
7	Piston	16	Valve	26	Plate	35	Solenoid valve
8	Plug	17	Spring	27	Washer	36	Gasket
9	Plug	18	Stoper	28	Bolt	37	Body
						38	Orifice

https://www.forkliftpdfmanuals.com/

(2) Operation

The control valve mainly consists of the main relief valve, inching valve, accumulator valve and directional valve.

The discharged oil from the gear pump enters main relief valve of the control valve and its pressure is adjusted 10.8~14.9kgf/cm^2 (154~212psi).

The oil adjusted pressure by the main relief valve is decided on the direction of forward or reverse by the solenoid valve.

The decided oil is delivered the power transferred from the torque converter to drive axle through the oil path between spacer and transmission case, the pipe of transmission outside and reverse clutch.

The remaining oil appropriating clutch pressure flows into the torque converter through the input pressure control valve in torque converter of the top of space.

At this time, the oil pressure input to the torque converter is adjusted 4~7kgf/cm^2 (57~100psi), the oil pressure output from the torque converter is adjusted below 7kgf/cm^2 (100psi).

The oil in charge of increasing torque in the torque converter flows from the torque converter, enters the radiator, after refrigerated, it is in charge of clutch lubrication through the lubrication oil path of the clutch shaft.

The pressure detecting valve and built in accumulator provide a soft plugging when changing gears.

The pressure detecting valve allows the accumulator to absorb the small shocks of rapid pressure build up and quick release during gear changes.

When full pressure builds up, the pressure detecting valve shuts the accumulator off and allows it to empty, so it is ready to function again during gear change.

The inching valve permits the clutch to partially disengage, so that engine rpm can be increased for lifting while travel speed remains low.

(3) Oil pressure circuit diagram

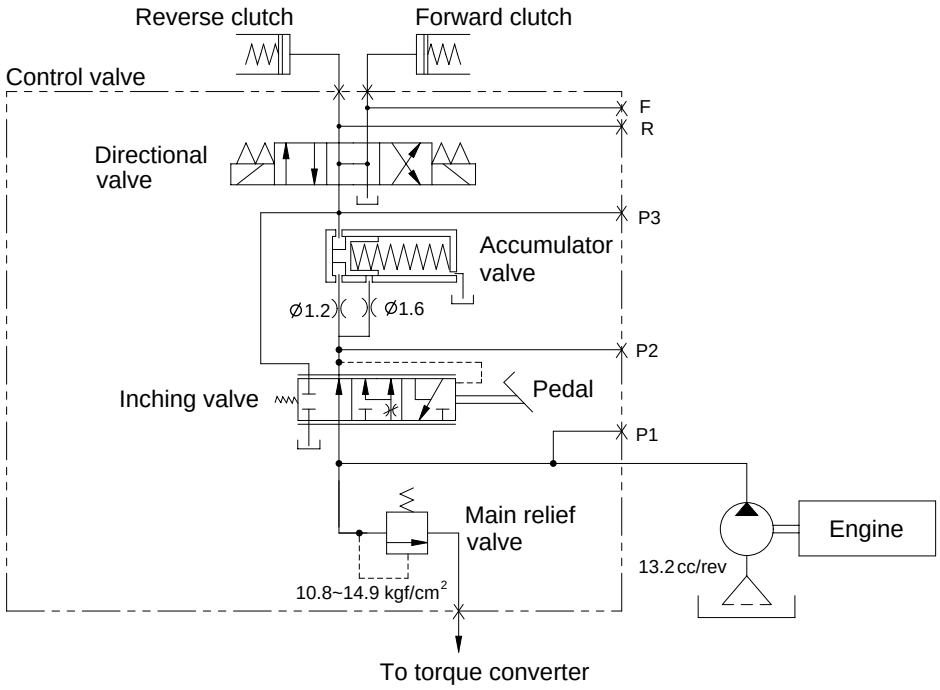

20D7PT09

https://www.forkliftpdfmanuals.com/

8) FORWARD CLUTCH

(1) Operation

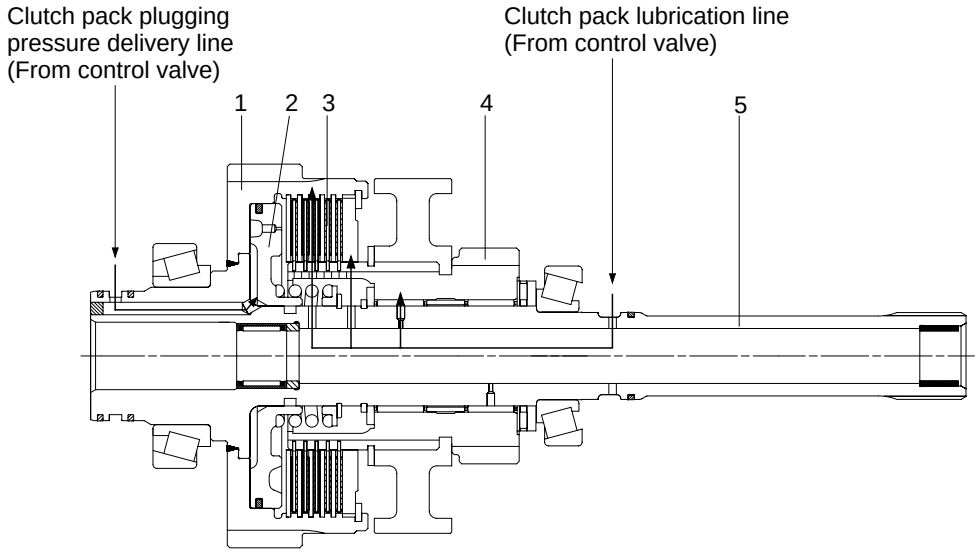

20D7PT31

1	Drum gear	3	Friction plate and plate	5	Forward shaft
2	Clutch piston	4	Clutch gear		

When forward mode is selected through the solenoid valve of control valve, the flux flowed by the oil pump flows into forward clutch pack in 9~14.2kgf/cm^2 (128~202psi) of pressure through the oil path of transmission inside.

This oil make plugging of clutch pack by giving pressure at the piston of clutch pack.

At this time, the drum gear of clutch pack is always revolving while connected with the turbine shaft of torque converter.

According to be plugging, the clutch gear is connected and revolved with drum gear, this power is delivered with linking output gear in touch with clutch gear.

https://www.forkliftpdfmanuals.com/

(2) Structure

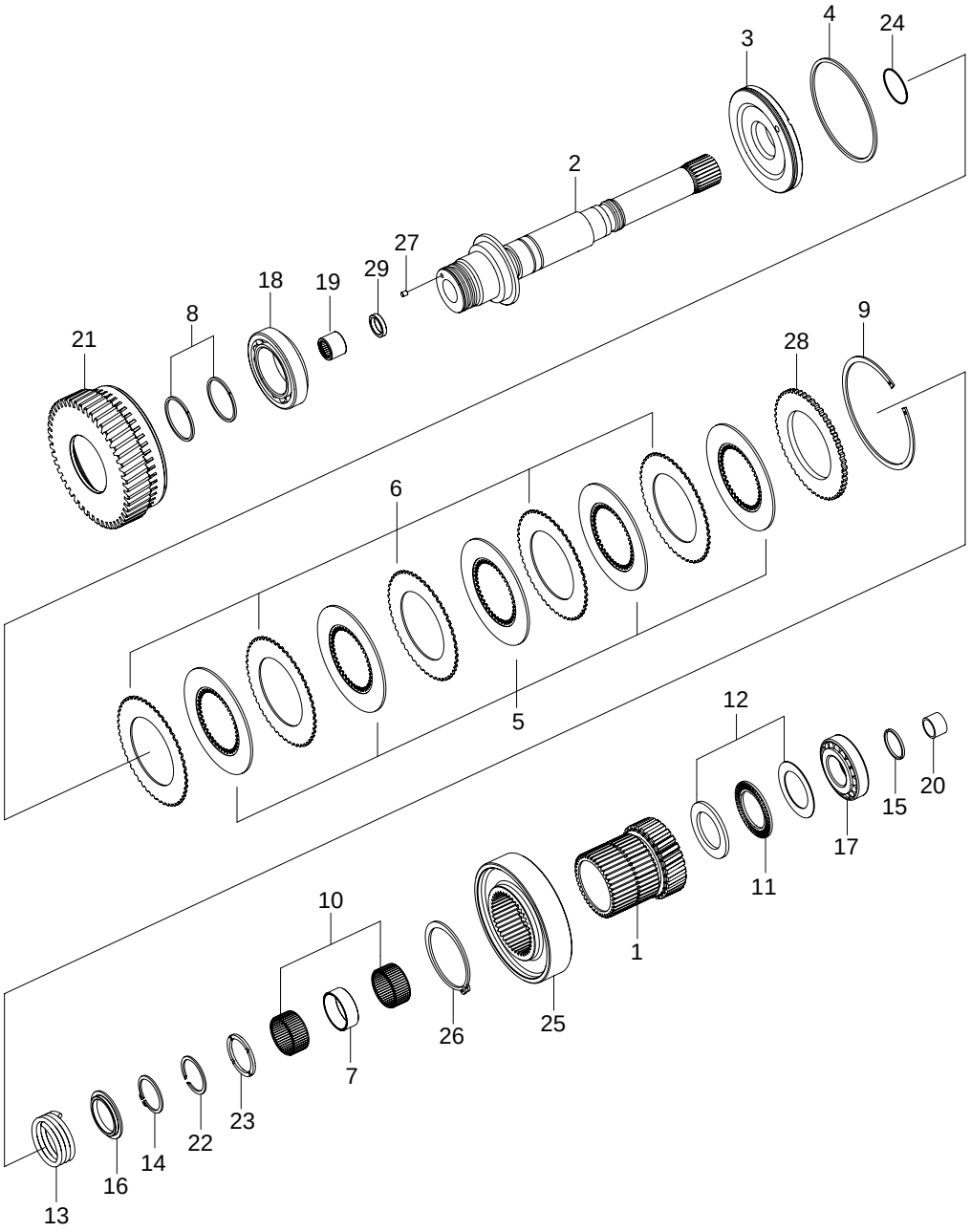

20D7PT11

1	Forward clutch gear	11	Thrust needle bearing	21	Forward drum gear
2	Forward shaft	12	Thrust washer	22	Snap ring
3	Piston	13	Spring	23	Thrust washer
4	Piston ring	14	Snap ring	24	O-ring
5	Friction plate	15	Seal ring	25	Parking drum
6	Plate	16	Spring cover	26	Snap ring
7	Spacer	17	Taper roller bearing	27	AV-Seal
8	Seal ring	18	Taper roller bearing	28	Side plate
9	Snap ring	19	Needle bearing	29	Ring
10	Needle bearing	20	Bush		

https://www.forkliftpdfmanuals.com/

9) REVERSE CLUTCH

(1) Operation

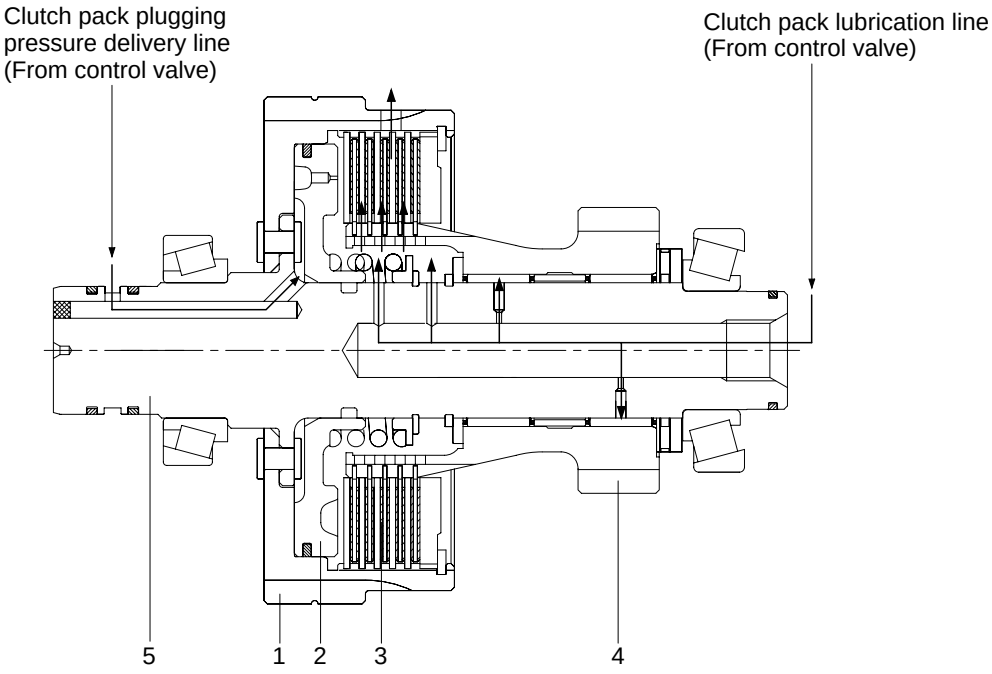

1	Reverse drum gear	3	Friction plate and plate	5	Reverse shaft
2	Clutch piston	4	Clutch gear		

When reverse mode is selected through the solenoid valve of control valve, the flux flowed by the oil pump flows into the oil path of reverse shaft in 9~14.2kgf/cm^2 (128~202psi) of pressure through the oil path of transmission outside.

This oil make plugging of reverse clutch pack by giving pressure at the piston of clutch pack.

At this time, the reverse drum gear is revolving against forward drum gear with engaging forward drum gear.

According as the clutch is plugging, the reverse clutch gear revolves.

The reverse clutch gear is connected with output gear, the power transferred from engine is delivered to output of the transmission.

https://www.forkliftpdfmanuals.com/

(2) Structure

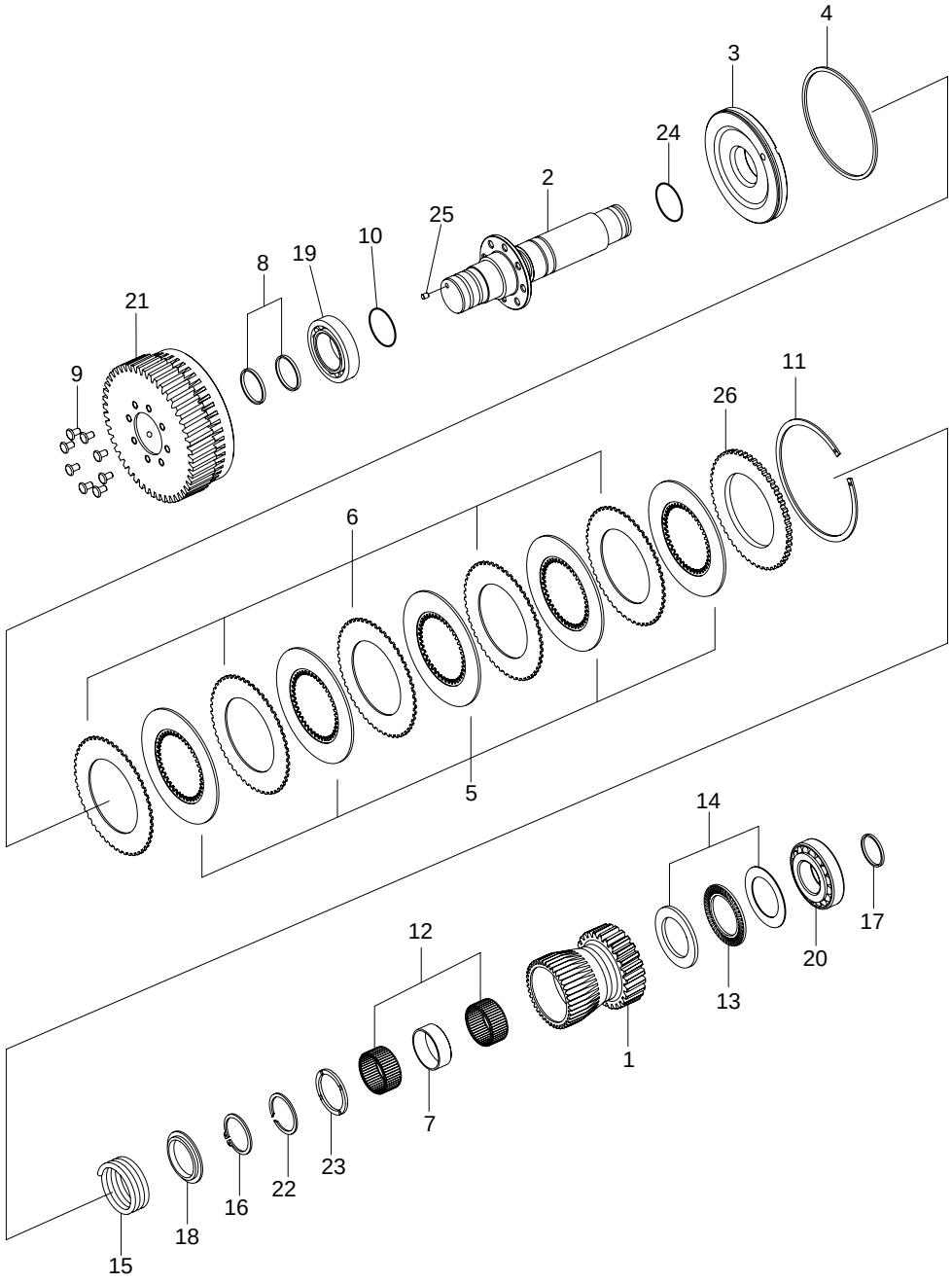

20D7PT13

1	Reverse clutch gear	10	O-ring	19	Taper roller bearing
2	Reverse shaft	11	Snap ring	20	Taper roller bearing
3	Piston	12	Needle bearing	21	Reverse drum gear
4	Piston ring	13	Thrust needle bearing	22	Snap ring
5	Friction plate	14	Thrust washer	23	Thrust washer
6	Plate	15	Clutch spring	24	O-ring
7	Spacer	16	Snap ring	25	AV-Seal
8	Seal ring	17	Seal ring	26	Side plate
9	Rivet	18	Spring cover		

https://www.forkliftpdfmanuals.com/

10) OUTPUT GEAR

(1) Operation

The output gear is engaging the forward clutch gear and reverse clutch gear together.
If a driver selects forward, the forward clutch gets plugging, the forward clutch gear revolves and the power of forward clutch gear is delivered to output gear.
If a driver selects reverse, the reverse clutch gets plugging, the reverse clutch gear revolves and the power of reverse clutch gear is delivered to output gear.

(2) Structure

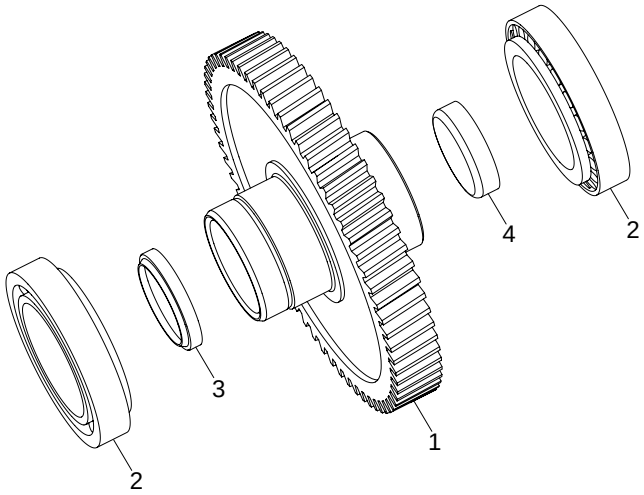

20D7PT14

1	Output gear	3	Oil seal
2	Taper roller bearing	4	Output gear cover

https://www.forkliftpdfmanuals.com/

4. DRIVE AXLE

1) INSTALLATION VIEW

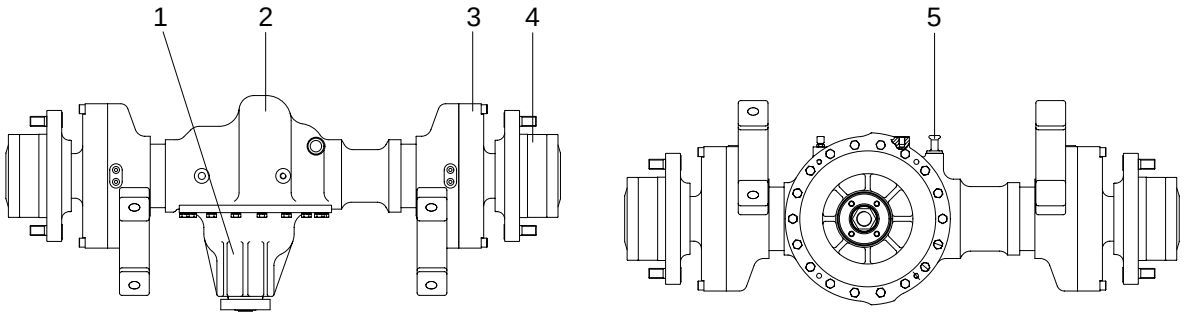

20D7PT15

1	Carrier assembly	3	Traveling brake	5	Oil level gage
2	Drive axle housing	4	Hub		

2) STRUCTURE

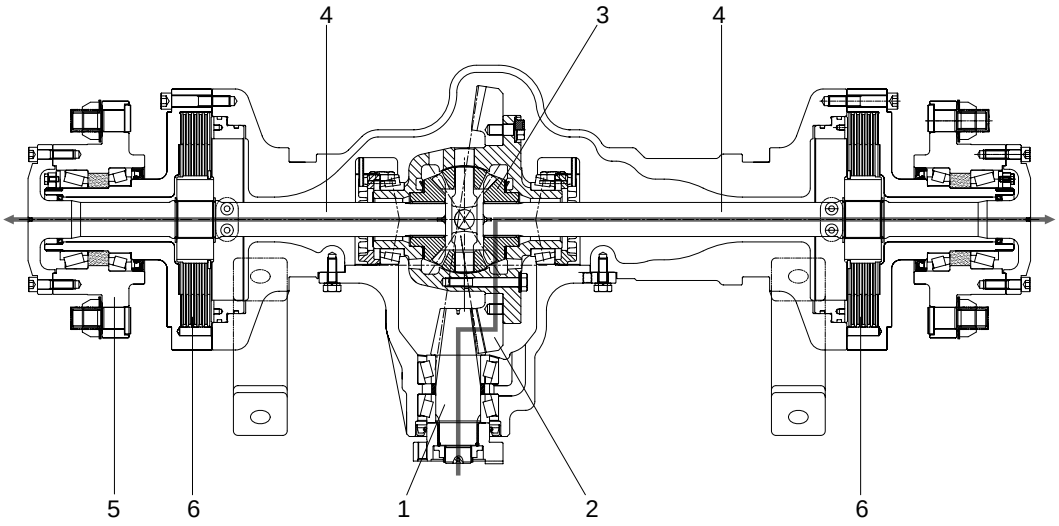

20D7PT16

1	Piston shaft	3	Differential device	5	Hub
2	Ring gear	4	Axle shaft	6	Traveling brake

The drive axle is connected with the transmission output gear and universal joint.
The power transferred by the universal joint is connected to the pinion shaft of drive axle, the pinion shaft delivers the power to the differential device through the ring gear.
The power transferred to the differential gear is delivered to final drive through the axle shaft.

https://www.forkliftpdfmanuals.com/

3) CARRIER ASSEMBLY

(1) Operation

The pinion shaft is supported by the taper roller bearing in the carrier case and the bolt at the end of a pinion shaft and transfers the power which is delivered from the universal joint to the ring gear assembled from bolts at a differential device.
This power makes the differential device run.
Since the differential device is connected with an axle shaft and a spline, the power transferred to differential device is delivered to final drive through the axle shaft.

(2) Structure

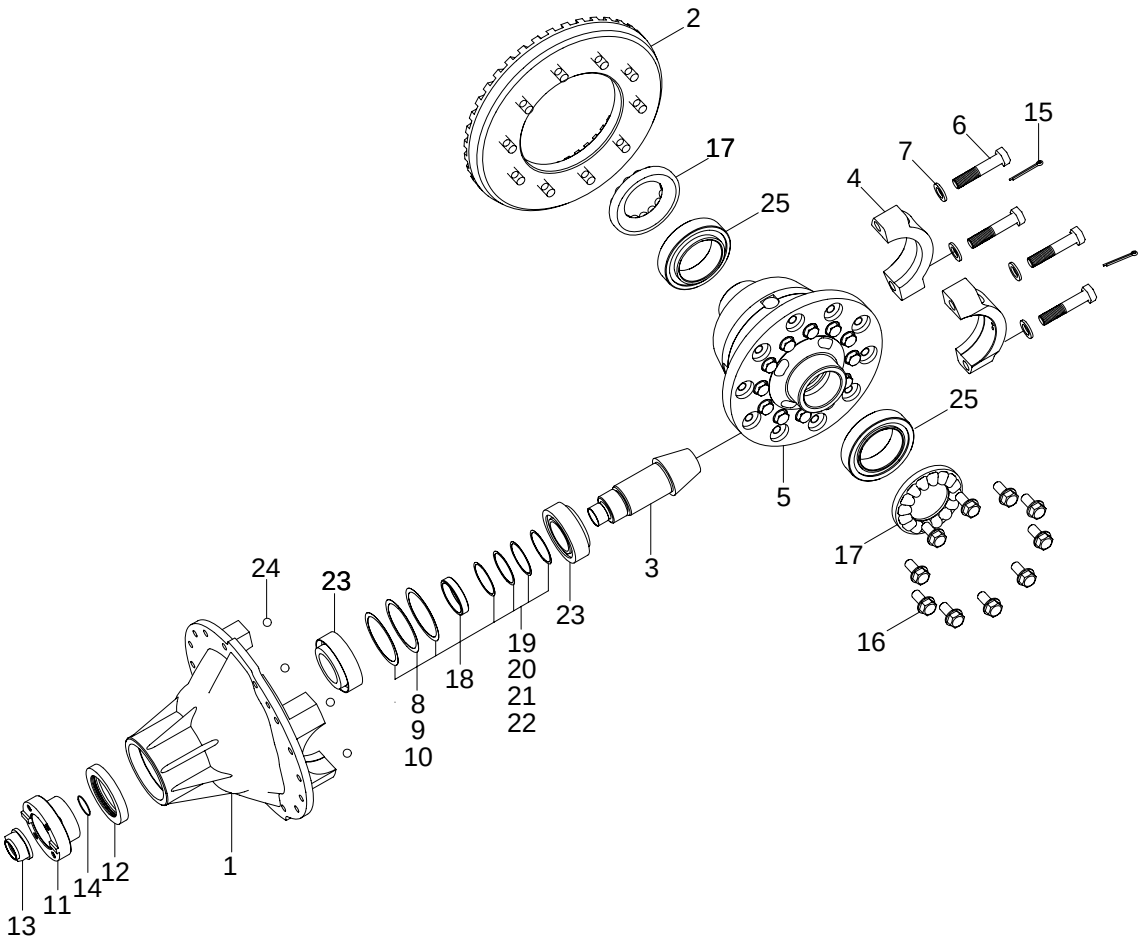

20D7PT18

1	Carrier case	9	Shim	17	Bearing control ring bolt
2	Spiral ring gear	10	Shim	18	Spacer
3	Pinion shaft	11	Universal joint flange	19	Shim
4	Carrier cap	12	Oil seal	20	Shim
5	Differential device	13	Nut	21	Shim
6	Cap bolt	14	O-ring	22	Shim
7	Washer	15	Cotter pin	23	Taper roller bearing
8	Shim	16	Bolt	24	Ball
				25	Bearing

https://www.forkliftpdfmanuals.com/

4) DIFFERENTIAL DEVICE

(1) Operation

Since the ring gear is linked with the right of the differential case and the bolt, the power transferred to the ring gear makes the differential device revolve.

And also, the left and right of the differential case are connected with the left and right of the axle shaft and the spline respectively, it delivers the power to the final drive.

If the load concerning in the left and right of the final drive is different, the shock is transferred to the drive axle, the differential gear in the differential device runs, the power transferred to the differential device adjusts the delivering rate to the left and right axle shaft.

Consequently, it guarantees for safety of drivers.

(2) Structure

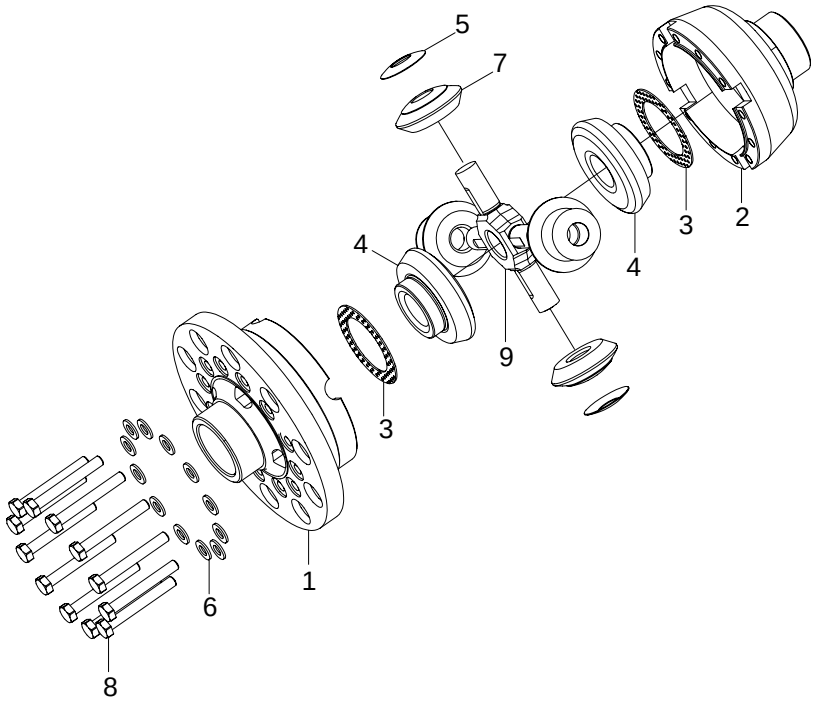

20D7PT19

1	Differential case (Left)	4	Differential gear	7	Pinion
2	Differential case (Right)	5	Thrust washer	8	Bolt
3	Thrust washer	6	Washer	9	Spider

https://www.forkliftpdfmanuals.com/

GROUP 2 TROUBLESHOOTING

Trouble symptom	Probable cause	Remedy
1. Excessive oil temperature rise		
1) Torque converter	· Improper oil level.	· Check oil level. Add or drain oil as necessary.
	· Impeller interfering with surroundings.	· After draining oil from oil tank and transmission, check and replace interfering parts.
	· Stator and free wheel malfunctioning.	· Check engine (stalling) speed. If necessary, replace.
	· Air sucked in.	· Check the inlet side joint or pipe. If necessary, retighten joint or replace gasket.
	· Water intruding into transmission case.	· Check drained oil. If necessary, change oil.
	· Bearing worn or seizing.	· Disassemble, inspect, repair or replace.
	· Gauge malfunctioning.	· Check and, if necessary, replace.
2) Transmission	· Clutch dragging.	· Check to see whether or not machine moves even when transmission is placed in neutral position. If so, replace clutch plate.
	· Bearing worn or seized.	· Disassemble, check and replace.
2. Noise operation		
1) Torque converter	· Cavitation produced.	· Change oil, replace parts leaking air.
	· Flexible plate damaged.	· Listen to rotating sound at lowspeed operation. If necessary, replace flexible plate.
	· Bearing damaged or worn.	· Disassemble, check and replace.
	· Gear damaged.	· Disassemble, check and replace.
	· Impeller interfering with surroundings.	· Check impeller or check drained oil for mixing of foreign matter. If necessary, change oil.
	· Bolt loosening.	· Disassemble and check. If necessary, retighten or replace.
	· Spline worn.	· Disassemble, check and replace.
	· Noise gear pump operation.	· Disassemble, check and replace.
2) Transmission	· Dragging caused by seizing clutch.	· Check to see whether or not machine moves even when transmission is in neutral position. If so, replace clutch plate.
	· Bearing worn or seizing.	· Disassemble, check and replace.
	· Gear damaged.	· Disassemble, check and replace.
	· Bolt loosening.	· Disassemble, check and retighten or replace.
	· Spline worn.	· Disassemble, check and replace.

https://www.forkliftpdfmanuals.com/

Trouble symptom	Probable cause	Remedy
3. Low output power		
1) Torque converter	· Insufficient hydraulic pressure :	
	- Low oil level.	- Check oil level and add oil.
	- Air sucked in.	- Check joints and pipes. If necessary, retighten joint or replace packing.
	- Oil filter clogging.	- Check and replace.
	- Oil pump worn. (Low delivery flow)	- Check oil pressure. If necessary replace pump.
	- Regulator valve coil spring fatigued.	- Check spring tension. If necessary, replace.
	- Control valve spool malfunctioning.	- Disassemble, check and repair or replace.
	- Piston or O-ring worn.	- Disassemble, check measure and replace.
	· Stator free wheel cam damaged.	- Check stalling speed. (Increased engine load will cause excessive drop of stalling speed.)
		- Check oil temperature rise. If any, replace free wheel.
2) Transmission	· Flexile plate deformed	· Replace flexible plate.
	· Stator free wheel seizing.	- Check temperature plate. (No-load will cause temperature rise)
		- Replace free wheel if a drop of starting output is found.
	· Impeller damaged for interfering with the surroundings.	- Check drained oil for foreign matter. If any, change oil.
	· Use of poor quality of oil or arising of air bubbles.	- Check and change oil.
	- Air sucked in from inlet side.	- Check joints and pipes. If necessary, retighten joint or replace packing.
	- Low torque converter oil pressure accelerates generation of air bubbles.	- Check oil pressure.
	- Oil mixing with water.	- Check drained oil and change oil.
	- Inching rod out of adjustment.	- Check and adjust.
	· Clutch slipping	
	- Lowering of weight.	- Check oil pressure.
	- Piston ring or O-ring worn.	- Disassemble, check, measure and replace.
	- Clutch piston damaged.	- Disassemble, check and replace.
	- Clutch plate seizing or dragging.	- Check to see whether or not machine moves even when transmission is in neutral position. If so, replace.

https://www.forkliftpdfmanuals.com/

Trouble symptom	Probable cause	Remedy
4. Unusual oil pressure		
1) Oil pressure is high	· Control valve malfunctioning.	(1)Check for spool operation. If necessary, replace valve. (2)Check for clogging of small hole in valve body. If necessary, clean or repair.
	· Cold weather. (high oil viscosity)	· When atmospheric temp is below freezing point (when normal oil pressure is recovered if heated to 60 ~ 80°C), change oil.
2) Oil pressure is low	· Use of improper oil.	· Check and change oil.
	· Gear pump malfunctioning(worn).	· Disassemble, check and replace.
	· Oil leaks excessively : (1)Control valve oil spring defective.	· Check spring tension (see spring specification). If necessary replace.
	(2)Control valve spool defective.	· Disassemble, check, and repair or replace valve.
	· Air sucked in.	· Check joints and pipes. If necessary, retighten joint or replace packing.
	· Low oil level.	· Check oil level and add oil.
	· Oil filter clogging.	· Check and replace.
3) Transmission	· Oil leaks excessively.	· Disassemble, check (piston ring and O-ring for wear and other defects), and replace.
5. Power is not transmitted		
1) Torque converter	· Clutch plate damaged.	· Check for damage by listening to abnormal sounds at a low converter speed and replace.
	· Low oil level.	· Check oil level and add oil.
	· Oil pump driving system faulty.	· Disassemble and check for wear of pump gear, shaft and spline. Replace defective parts.
	· Shaft broken.	· Check and replace.
	· Lack of oil pressure.	· Check oil pump gear for wear and for oil suction force. If necessary, replace pump.
2) Transmission	· Low oil level.	· Check oil level and add oil.
	· Inching valve and link lever improperly positioned.	· Check measure and adjust.
	· Forward/reverse spool and link lever improperly positioned.	· Check and adjust.
	· Clutch fails to disengage : (1)Clutch case piston ring defective.	· Disassemble, check and replace.
	(2)Main shaft plug slipping out.	· Disassemble, check and repair or replace.
	· Clutch seizing.	· Check to see whether or not machine moves even then transmission is in neutral position. If so, replace.
	· Shaft broken off.	· Disassemble, check(main shaft, etc.), and replace.
	· Clutch drum damaged (spring groove).	· Disassemble, check and replace.
	· Clutch snap ring broken.	· Disassemble, check and repair or replace.

https://www.forkliftpdfmanuals.com/

Trouble symptom	Probable cause	Remedy
6. Power is not transmitted (Continue)	· Foreign matter intruding into oil passage to clutch. · Shaft spline worn.	· Disassemble, check and repair or replace. · Disassemble, check and replace.
7. Oil leakage (Transmission and torque converter)	· Oil leaks from oil seal.	· Disassemble and check for wear of seal lips and mating sliding surfaces (pump boss, coupling etc.) Replace oil seal, pump boss, coupling, etc.
	· Oil leaks from case joining surfaces.	· Check and retighten or replace packing.
	· Oil leaks from joint or pipe.	· Check and repair or replace gasket.
	· Oil leaks from drain plug.	· Check and retighten or gasket.
	· Oil leaks from a crack.	· Check and replace cracked part.

https://www.forkliftpdfmanuals.com/

1.TRANSMISSION

1) DISASSEMBLY

① Transmission assembly set.

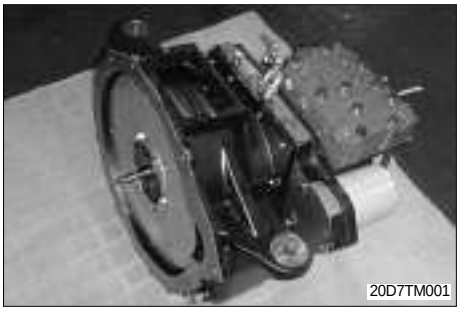

② Disconnect torque converter.

③ Extract PTO shaft.

④ Remove control valve bolt.

https://www.forkliftpdfmanuals.com/

⑤ Extract control valve.

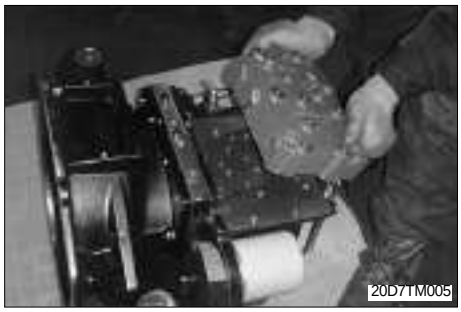

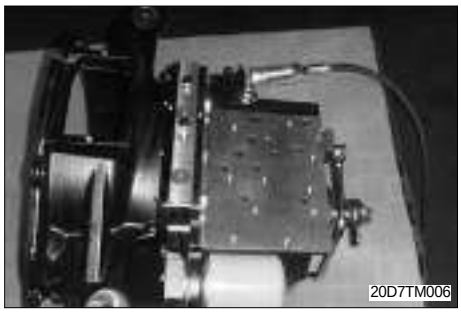

⑥ Extract oil filter.

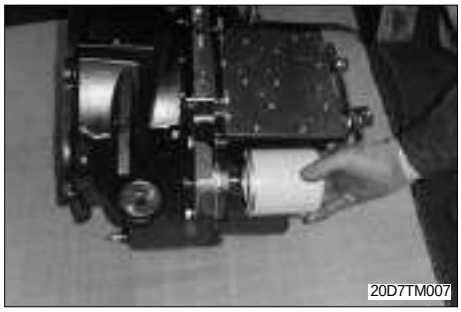

⑦ Remove snap ring.

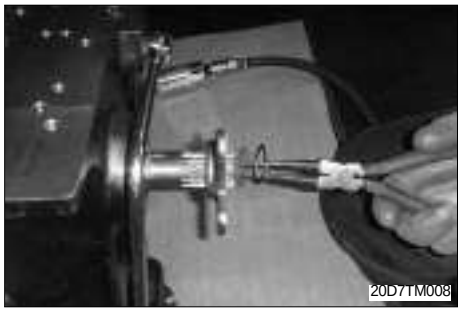

⑧ Remove parking lever.

https://www.forkliftpdfmanuals.com/

⑨ Remove snap ring.

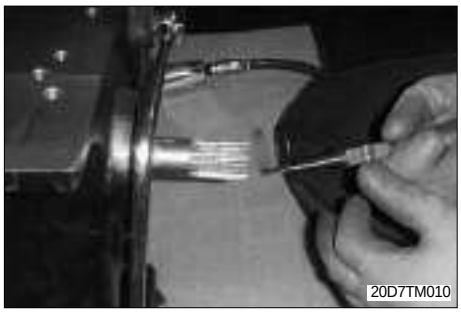

⑩ Remove bolt.

⑪ Remove out wheel bolt.

⑫ Remove bolt on the back side of filter.

⑬ Remove bolt.

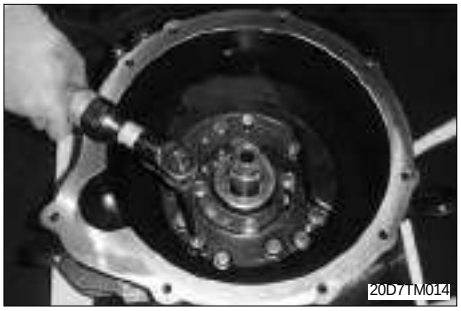

https://www.forkliftpdfmanuals.com/

⑭ Connect disassembly bolt.

⑮ Disassemble torque converter housing.

⑯ Disassemble spacer.

⑰ After disassemble.

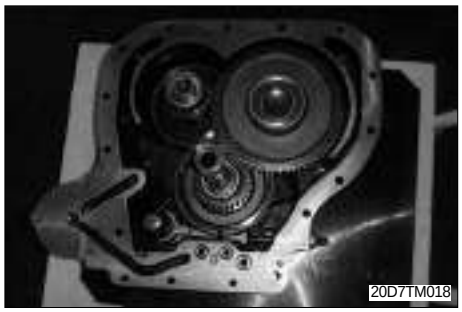

⑱ Disassemble output gear assembly set.

https://www.forkliftpdfmanuals.com/

⑲ Disassemble connection.

⑳ Extract band brake.

㉑ Disassemble forward clutch gear.

㉒ Disassemble reverse clutch gear.

㉓ After disassemble.

https://www.forkliftpdfmanuals.com/

2) ASSEMBLY

(1) Assembly of transmission case outside part

Plug assembly

※ Before assemble taper plug, spread loctite #577.

① Assemble the upper part taper plug of hydraulic pipe.

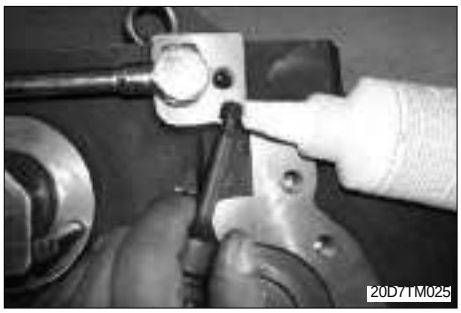

② Assemble installation part taper plug of control valve.

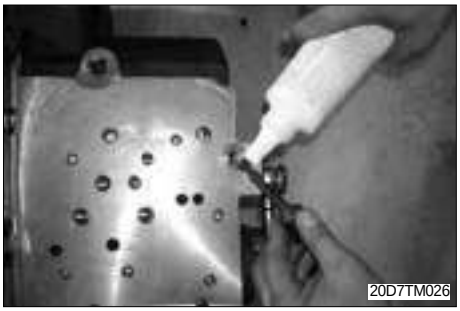

③ Assemble space installation part.

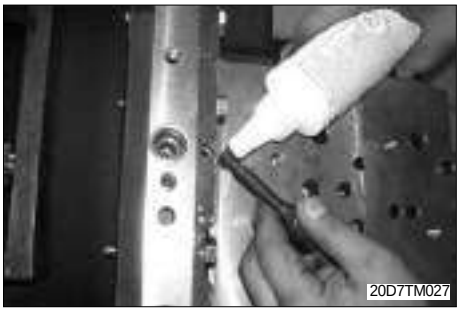

④ Assemble the left taper plug.

https://www.forkliftpdfmanuals.com/

⑤ Confirm torque.

・Tightening torque : 3.5~4.5 kgf・m
(25~33 lbf・ft)

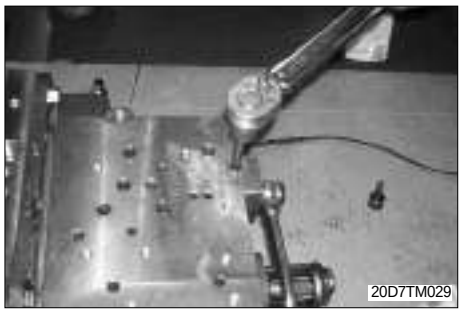

Oil seal pressurizer of cam shaft

① Spread sealant on oil seal.

※ Spread loctite #592 on the out wheel of oil seal.
Spread grease on inside wheel of oil seal.

② Pressurize oil seal.

Assembly of filter assembly bolt

① Spread sealant on oil seal.

※ Spread loctite #277 on filter assembly bolt.

② Confirm assembly and torque.

・Tightening torque : 3.5~4.5 kgf・m
(25~33 lbf・ft)

https://www.forkliftpdfmanuals.com/

(2) Assembly of transmission case inside

Assembly of bearing and parking control shaft

① Pressurize R part of bearing out wheel.

※ R part : Installation part of reverse clutch gear.

② Pressurize O part of bearing out wheel.

※ O part : Installation part of output gear assembly.

③ Pressurize F part of bearing out wheel.

※ F part : Installation part of forward clutch gear.

④ Assemble adjustment shaft.

https://www.forkliftpdfmanuals.com/

⑤ Assemble nut.

⑥ Spread grease on bearing out wheel.

※ When installing taper roller bearing, make sure whether or not it is close.

※ Spread grease in taper roller bearing.

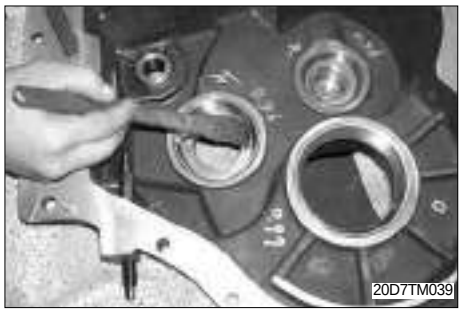

Assembly of forward / reverse clutch pack

① Confirm seal ring of reverse clutch.

※ Spread grease on seal ring of clutch pack.

② Spread oil on seal ring of reverse clutch.

③ Assemble reverse clutch at transmission.

https://www.forkliftpdfmanuals.com/

④ Confirm seal ring of forward clutch.

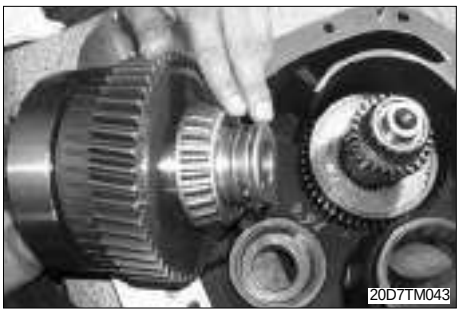

⑤ Spread oil on seal ring of forward clutch.

⑥ Assemble forward clutch at transmission.

※ After finishing assembly, make sure whether or not revolution of forward/reverse clutch pack is good.

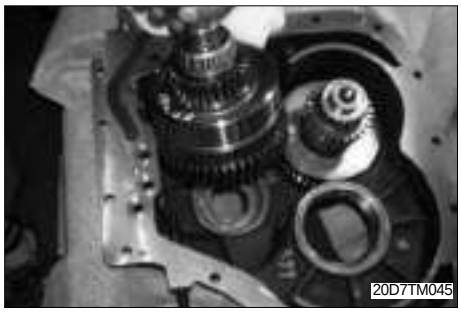

Assembly of parking brake system

① Fix small connection in PBB.

② Set in parking drum.

https://www.forkliftpdfmanuals.com/

③ Spread grease on cam shaft.

④ Fix large connection in cam shaft.

⑤ Fit large connection in PBB.

⑥ Assemble an eccentric shaft in PBB.

Assembly of output gear assembly

① Assembly output gear.

https://www.forkliftpdfmanuals.com/

② Confirm gear revolution condition.

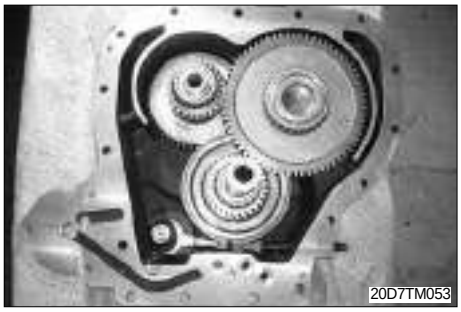

(3) Assembly of spacer sub assembly

Assembly of oil pump

① Assemble O-ring of charging pump.

※ Spread grease at O-ring surface.

② Spread sealant on charging pump.

※ Spread loctite #5127 at stator shaft lower in oil pump.

③ Spread sealant on the whole surface.

④ Fix charging pump in spacer.

https://www.forkliftpdfmanuals.com/

⑤ Spread sealant on hexagon bolt.

※ Spread loctite #242 at bolt.

⑥ Confirm assembly and torque.

· Tightening torque : 3.5~4.0 kgf · m
(25~29 lbf · ft)

Assembly of inlet and outlet of pressure adjustment valve in torque converter and pressure checking port

① Fix steel ball in spacer.

② Fix spring.

③ Spread sealant on plug and O-ring.

※ Spread loctite #277 at plug and bolt.

https://www.forkliftpdfmanuals.com/

④ Confirm torque.

・Tightening torque : 3.5~4.5 kgf・m
(25~33 lbf・ft)

⑤ Spread sealant on hex bolt.

⑥ Confirm torque.

・Tightening torque : 3.5~4.5 kgf・m
(25~33 lbf・ft)

Assembly of bearing cup

※ After measuring the transmission case, spacer and each clutch pack and estimating a proper amount of shim.
Insert a proper amount of shim before assembling bearing cup.
Make sure whether or not it is close with the lower of bearing cup.

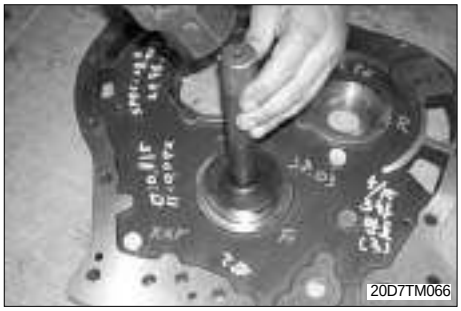

① Pressurize F part of bearing out wheel.

② Pressurize R part of bearing out wheel.

https://www.forkliftpdfmanuals.com/

③ Pressurize O part of bearing out wheel.

(4) Assembly of torque converter housing sub assembly

Assembly of temperature sensor and O-ring

① Spread loctite #577 on temperature sensor.

② Confirm assembly and torque.

· Tightening torque : 3.0~4.0 kgf · m
(22~29 lbf · ft)

③ Assemble O-ring and spread grease.

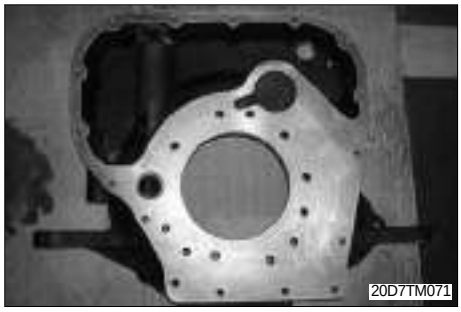

Oil strainer assembly

① Fix spring in strainer.

https://www.forkliftpdfmanuals.com/

② Fix strainer in torque converter housing.

③ Temporarily assemble plug.

④ Confirm torque.

· Tightening torque : 8~10 kgf · m
(58~72 lbf · ft)

(5) Assembly of sub assembly

Assembly of transmission case and spacer sub assembly

① Spread oil.

② Fix O-ring.

https://www.forkliftpdfmanuals.com/

③ Spread loctite #5127 on transmission case.

④ Pressurize lock pin.

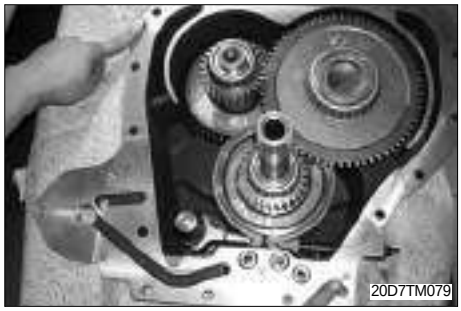

⑤ Assemble space.

⑥ Confirm gear revolution condition.

Torque converter assembly

① Spread loctite #5127 on space.

https://www.forkliftpdfmanuals.com/

② Work roller.

※ Pay attention to tear O-ring of torque converter and oil pump.

③ Fit torque converter housing in space.

④ Spread loctite #277 on bolt.

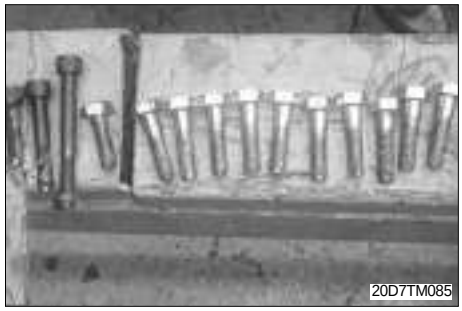

⑤ Temporarily assemble bolt.

⑥ Confirm torque.

・ Tightening torque : 5.5~6.5 kgf・m
(40~47 lbf・ft)

https://www.forkliftpdfmanuals.com/

(6) Transmission outside assembly

Fastening of transmission case bolt

① Revolve 90¡£

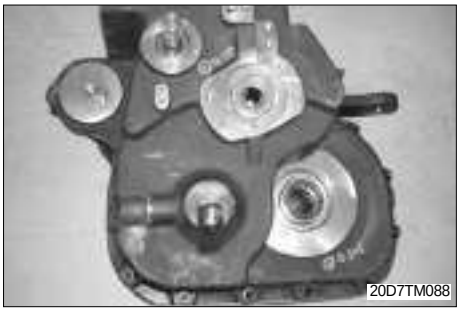

② Spread sealant on socket bolt.

③ Temporarily assemble at transmission case.

④ Confirm torque.

⑤ Spread sealant on hexagon bolt.

※ Spread loctite #277 on bolt.

https://www.forkliftpdfmanuals.com/

⑥ Confirm torque.

・Tightening torque : 5.5~6.5 kgf・m
(40~47 lbf・ft)

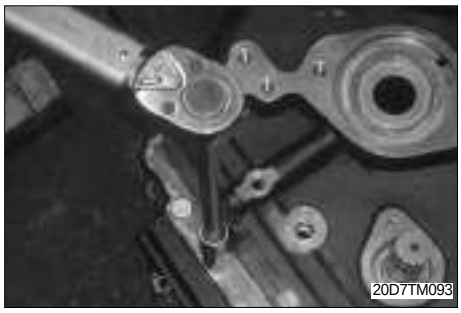

Oil filter assembly

① Temporarily assemble filter.

② Confirm fastening.

・Tightening torque : 0.8~1.2 kgf・m
(5.8~8.7 lbf・ft)

Parking brake part assembly

① Assemble snap ring.

② Spread loctite #277 on support pin.

https://www.forkliftpdfmanuals.com/

③ Temporarily assemble support pin.

④ Confirm torque.

・Tightening torque : 2.0~3.0 kgf・m
(14~22 lbf・ft)

⑤ Fix parking lever.

⑥ Assemble snap ring.

⑦ Fix spring and spread loctite #277 on bolt.

https://www.forkliftpdfmanuals.com/

⑧ Temporarily assemble parking bracket.

⑨ Confirm torque.

・Tightening torque : 0.6~0.8 kgf・m
(4.3~5.8 lbf・ft)

The way to adjusting parking brake

① Tighten the adjustment shaft and loosen the shaft a 3/4 revolution.
・Tightening torque : 0.65kgf・m (4.7lbf・ft)

② Tighten the nut.
・Tightening torque : 3kgf・m (221lbf・ft)

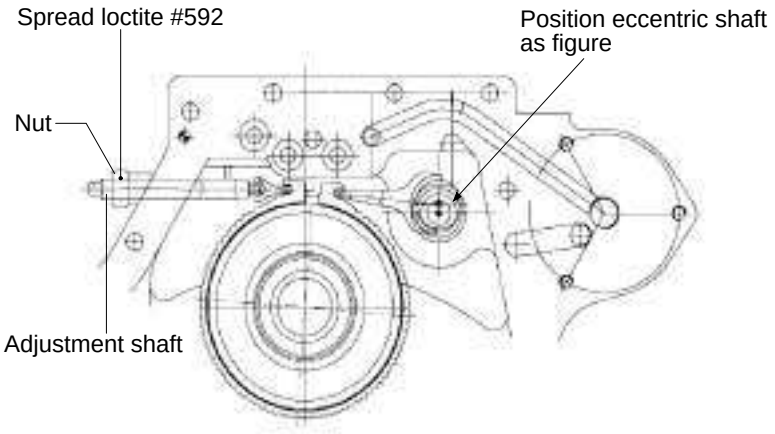

20D7PT33

Pipe offering oil path of reverse clutch assembly

① Prepare reverse pipe.

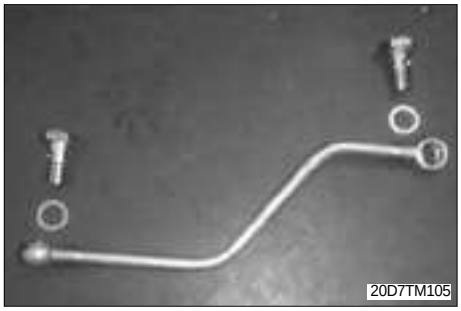

https://www.forkliftpdfmanuals.com/

② Spread loctite #577 on nipple plug.

③ Temporarily assemble oil pressure pipe and seal washer at the same time.

④ Spread sealant on nipple plug.

⑤ Temporarily assemble oil pressure pipe and seal washer at the same time.

⑥ Confirm torque.

- Tightening torque : 3.5~4.0 kgf · m
  (25~29 lbf · ft)

https://www.forkliftpdfmanuals.com/

Oil seal output gear assembly

① Spread loctite #592 on the out wheel of oil seal.

② Pressurize oil seal.

③ Spread grease on inside wheel of oil seal.

Control valve assembly

① As assembling, use guide pin at two spot.
Fix guide pin.

② Assemble control valve assembly.

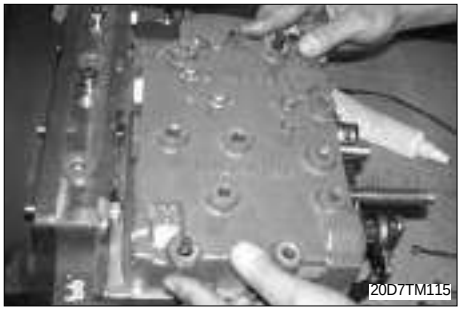

https://www.forkliftpdfmanuals.com/

③ Assemble hex bolt and confirm torque.

・Tightening torque : 3~4 kgf・m
(22~29 lbf・ft)

Air breather and oil level gauge guide pipe assembly

① Assemble air breather.

※ Spread loctite #577 on air breather.

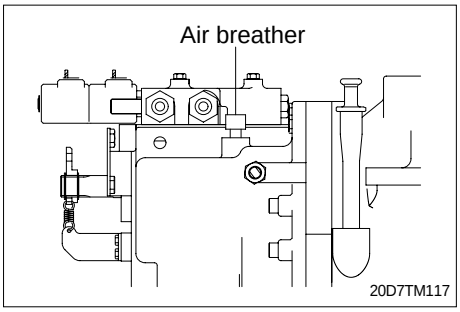

② Spread sealant on oil level gauge guide.

※ Spread loctite #608 on pipe.

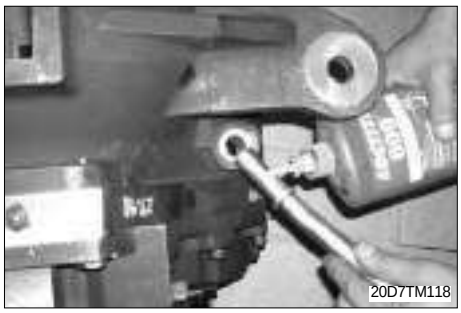

③ Pressurize guide.

https://www.forkliftpdfmanuals.com/

2. DRIVE AXLE

1) DISASSEMBLY

① Drive axle.

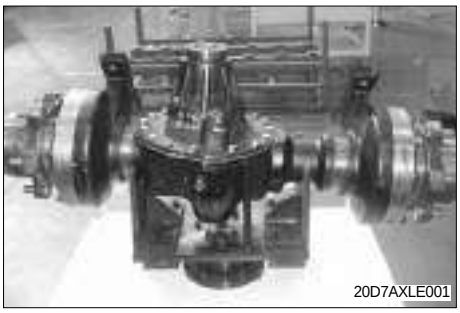

② Remove the bolt of axle shaft.

③ Extract the left axle shaft.

④ Extract the right axle shaft.

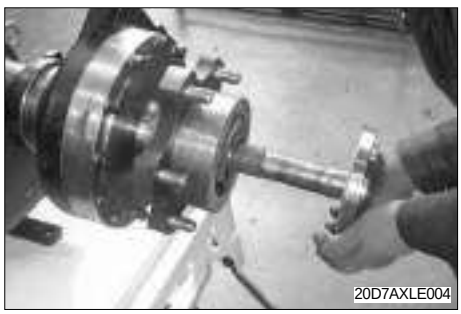

https://www.forkliftpdfmanuals.com/

⑤ Remove the bolt of plate / nut.

⑥ Extract the nut.

⑦ Extract the plate.

⑧ Extract the hub bearing.

⑨ Extract the hub.

https://www.forkliftpdfmanuals.com/

⑩ Remove the bolt of flange shaft.

⑪ Extract the flange shaft.

⑫ Disassemble the piston brake.

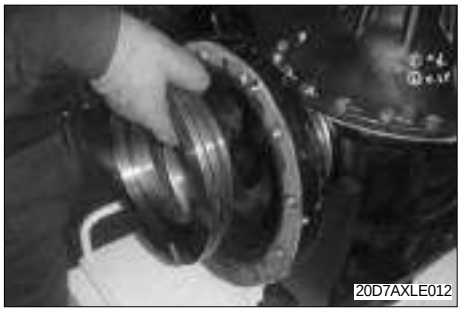

⑬ Disassemble the carrier assembly.

⑭ Fix the carrier assembly.

https://www.forkliftpdfmanuals.com/

⑮ Remove the bolt of carrier cap.

⑯ Extract the carrier cap.

⑰ Remove the left adjusting cap of bearing cup.

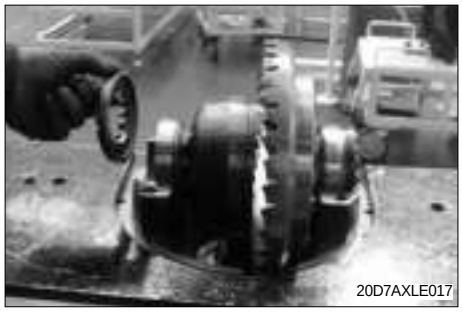

⑱ Remove the right adjusting cap of bearing cup.

⑲ Disassemble the differential assembly.

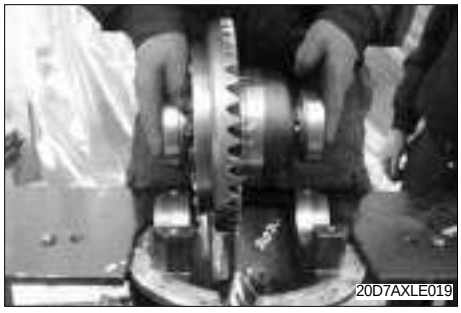

https://www.forkliftpdfmanuals.com/

⑳ After disassemble the carrier.

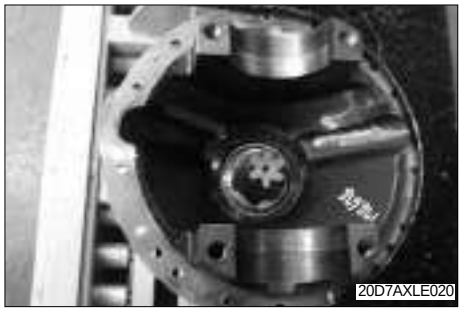

2) ASSEMBLY

(1) Assembly of carrier assembly

Differential device assembly

① Assemble spider and the differential pinion.

② Assemble the washer and the differential gear.

③ Assemble the spider and the differential.

https://www.forkliftpdfmanuals.com/

④ Assemble the washer and the differential gear.

⑤ Assemble the differential case.

⑥ Fix the bolt.

⑦ Confirm the differential gear backlash.

※ Adjust backlash of differential gear within 0.015㎜.

⑧ Assemble the ring gear.

https://www.forkliftpdfmanuals.com/

⑨ Assemble the bearing of differential.

(2) Assembly of carrier sub assembly

Adjusting shim and pinion shaft assembly

① Fix the carrier case.

② Measure a gap(A) for deciding an amount of shim with feeler gauge.

※ Determine shim X.

¡ /X = A ¡ Mounting distance (MD) of pinion gear

Ex 1) A = 0.5, MD value = - 0.2

X = 0.5 + 0.2 = 0.7㎜

Ex 2) A = 0.5, MD value = + 0.2

X = 0.5 - 0.2 = 0.3㎜

③ Select the shim and assemble.

④ Pressurize the bearing cup.

https://www.forkliftpdfmanuals.com/

⑤ Pressurize the bearing cone into the pinion shaft.

⑥ Fix the pinion shaft.

⑦ Set the ball.

⑧ Fix the fixing jig.

⑨ Fix the ball.

https://www.forkliftpdfmanuals.com/

⑩ Revolve the carrier case in 180¡£

⑪ Fix the spacer.

⑫ Shim measuring gauge 1 insert.

⑬ Shim measuring gauge 2 insert.

⑭ Put the shim measuring block.

https://www.forkliftpdfmanuals.com/

⑮ Measure a gap (B).

※ Determine shim X.

· X = B - End play (0.03~0.06)

Ex 1) B = 0.5,

X = 0.5 - (0.03~0.06) = 0.47~0.44㎜

⑯ Remove the pinion shaft.

⑰ Assemble the bearing cup.

⑱ Assemble and fit the pinion.

⑲ Assemble the shim.

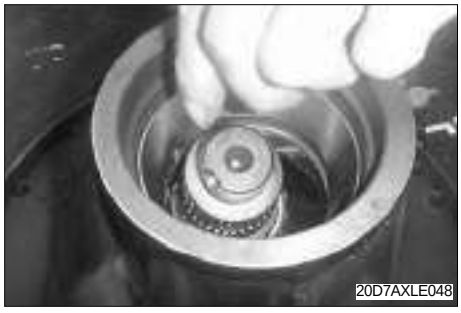

https://www.forkliftpdfmanuals.com/

⑳ Fix the bearing cone.

Assembly of carrier sub assembly

① Pressurize the oil seal.

② Fix the U-joint flange.

※ Assemble U-joint flange in preload 0.01~0.19 kgf · m.

③ Fix the O-ring.

④ Temporarily assemble the nut.

※ Spread loctite #242 on nut.

https://www.forkliftpdfmanuals.com/

⑤ Fasten the torque.

・Tightening torque : 16.2~19.1 kgf・m
(117~138 lbf・ft)

⑥ Confirm the preload.

⑦ Perform the calking.

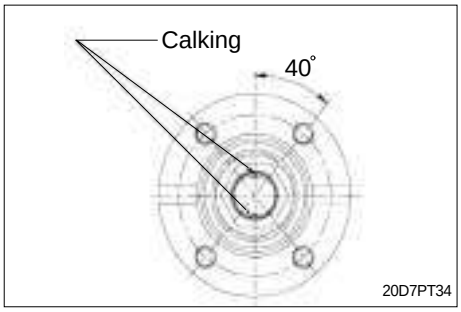

⑧ Assemble the differential sub in case.

⑨ Fix the steel ball.

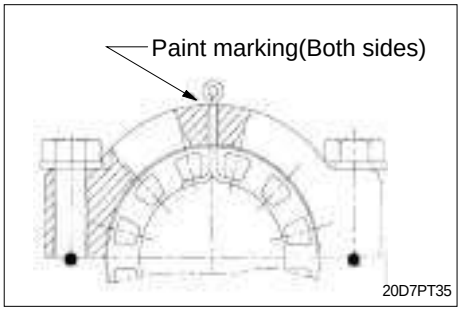

https://www.forkliftpdfmanuals.com/

⑩ Temporarily assemble the carrier cap.

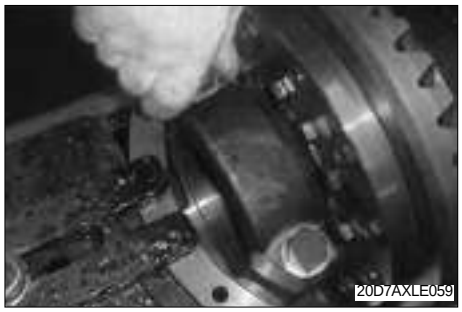

⑪ Fasten the torque.

※ Spread loctite #277 on bolt.

・Tightening torque : 26.8~32 kgf・m
(194~231 lbf・ft)

Adjust backlash

① Assemble the RING BRG ADJUST.

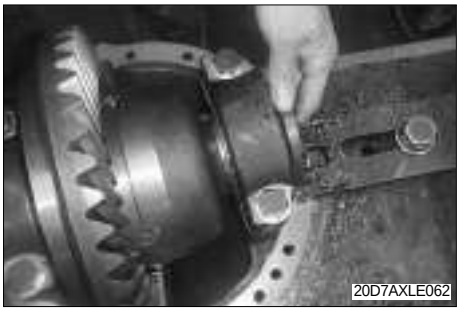

② Adjust the RING BRG ADJUST.

③ Measure backlash.

https://www.forkliftpdfmanuals.com/

④ Fasten RING BRG ADJUST.

⑤ Measure backlash again.

※ Bachlash of pinion shaft and ring gear is 0.15~0.2㎜ (0.006~0.008 in)

※ If backlash is wrong, carry out adjusting work.
Adjust the left / right of RING BRG ADJUST by one and one clip.

⑥ Fit position.

⑦ Assemble cotter pin.

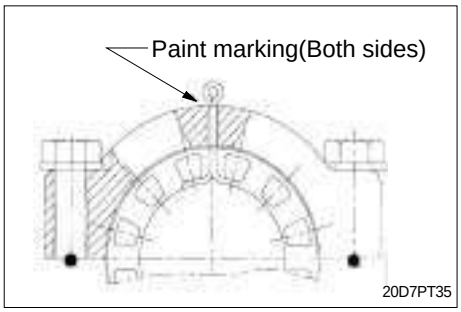

※ After assembling, adjust pattern of the gear and pinion shaft as figure.
If pattern is not adjusted, take a measure as measuring backlash again and then reassemble.

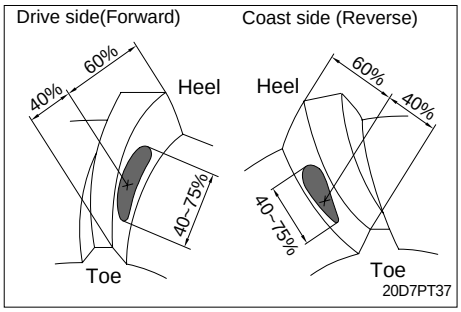

https://www.forkliftpdfmanuals.com/

Assembly of carrier assembly

① Pressurize lock pin into drive axle.

② Spread sealant on the installation surface of carrier.

③ Fix assembly guide bar.

④ Fit carrier at drive axle housing.

※ Spread loctite #5127 on drive axle housing.

⑤ Spread loctite #277 on the spring washer bolt.

https://www.forkliftpdfmanuals.com/

⑥ Temporarily assemble bolt and confirm torque.

・Tightening torque : 6~7 kgf・m
(43~51 lbf・ft)

(2) TRAVELING BRAKE SYSTEM ASSEMBLY

Piston assembly

① Fix large quad ring into brake.

② Fix small quad ring into brake.

※ When assembling quad ring, pay attent to chopping.

③ Spread oil on the piston.

④ Fix piston into drive axle housing.

https://www.forkliftpdfmanuals.com/

⑤ Set assembly jig.

⑥ Assemble close to drive axle housing.

⑦ Pressurize lock pin.

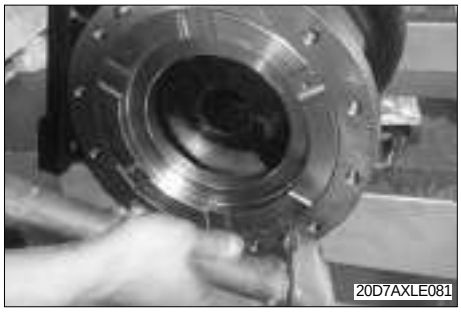

⑧ Measure projection degree of piston.

※ Manage projection degree of piston in 0.6~0.9㎜.

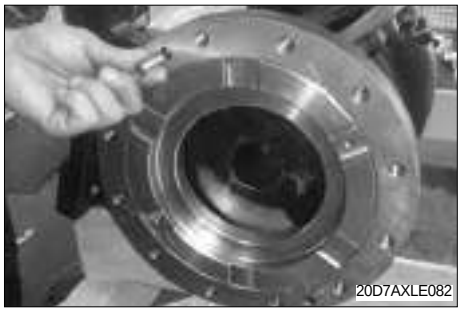

Friction plate and plate assembly

① Pressurize oil seal into flange.

https://www.forkliftpdfmanuals.com/

② Assemble snap ring at socket.

③ Fix socket gear into flange shaft.

④ Fix plate into socket gear.

⑤ Fix friction plate into socket gear.

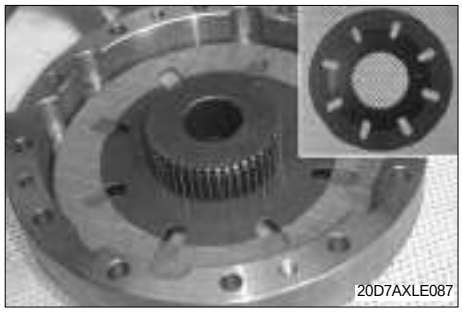

⑥ Fix friction plate and confirm the direction.

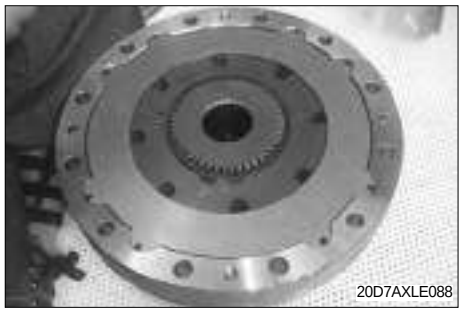

https://www.forkliftpdfmanuals.com/

⑦ Assemble snap ring at socket.

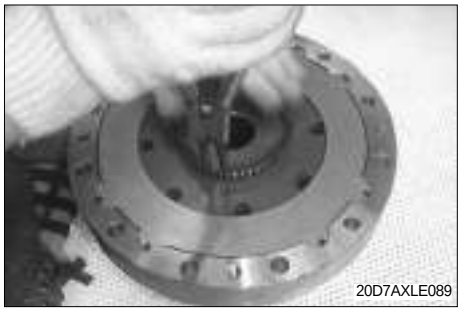

⑧ Measure stepped pulley between flange and plate and record.

※ Manage stepped pulley of flange 0.6~0.9㎜.

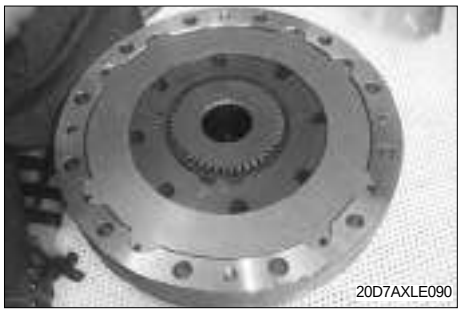

Flange shaft assembly

① Select flange shaft.

② Spread loctite # 5127.

③ Spread on the whole surface of flange shaft.

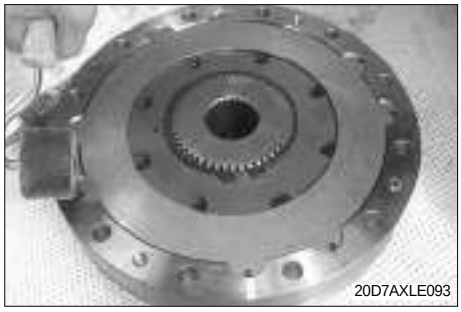

https://www.forkliftpdfmanuals.com/

④ Fit flange into drive axle housing.

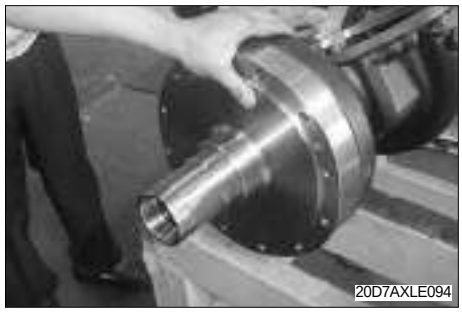

⑤ Spread loctite #242 on bolt.

⑥ Fasten bolt.

・Tightening torque : 9~11.5 kgf・m
(65~83 lbf・ft)

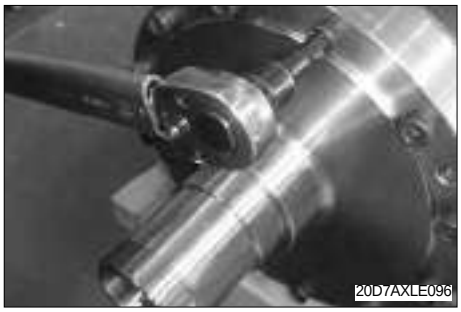

(3) Hub assembly

Hub sub assembly

① Pressurize bolt.

② Put a bearing cup on the upper and lower of hub.

https://www.forkliftpdfmanuals.com/

③ Pressurize bearing cup.

④ Spread grease on the bearing of flange.

⑤ Fix bearing into hub.

⑥ Spread grease in the oil seal.

⑦ Spread sealant on the outside of oil.

https://www.forkliftpdfmanuals.com/

⑧ Pressurize oil seal.

⑨ Spread grease on the bearing of axle.

⑩ Fix bearing into hub.

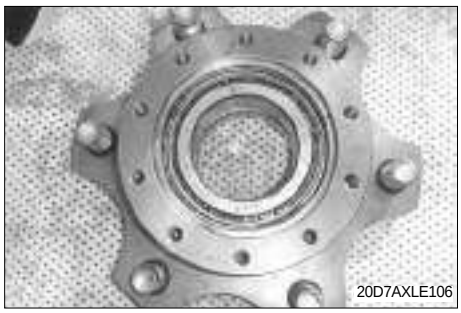

⑪ Spread grease on hub.

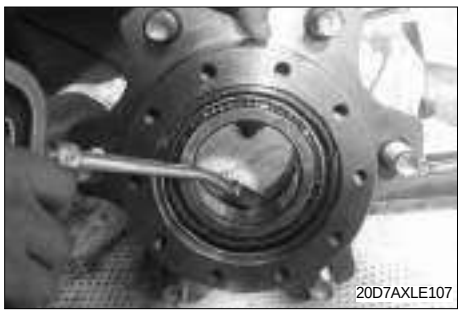

Hub assembly

① Spread grease on the flange shaft.

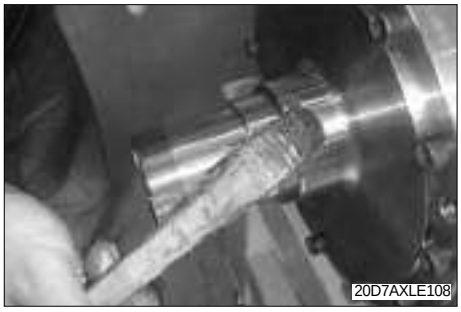

https://www.forkliftpdfmanuals.com/

② Fix hub.

③ Fix plate.

④ Fix nut.

⑤ Fasten torque and loosen.

· Tightening torque : 21~25 kgf · m
(152~181 lbf · ft)

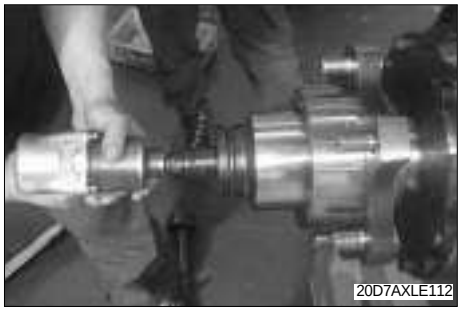

⑥ Adjust preload.

· 0.6~0.8 kgf · m

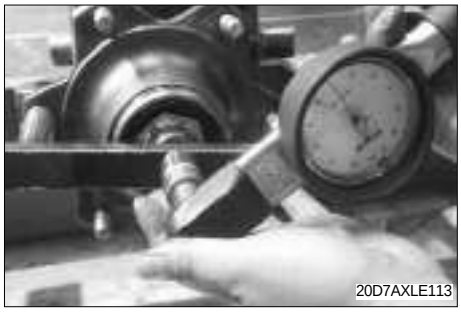

https://www.forkliftpdfmanuals.com/

⑦ Fit the position of plate, nut and hole.

⑧ Spread loctite #277.

⑨ Confirm torque.

· Tightening torque : 0.8~1.2 kgf · m
(5.8~11 lbf · ft)

Axle shaft assembly

① Spread loctite #5127 on axle shaft.

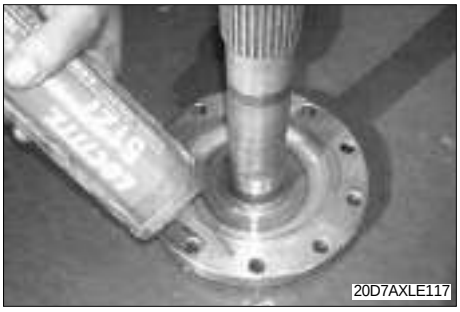

② Fix into hub.

https://www.forkliftpdfmanuals.com/

③ Close to hub.

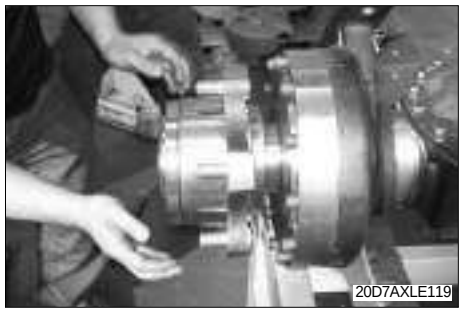

④ Spread loctite #277 on bolt.

・Tightening torque : 6~7 kgf・m
(43~51 lbf・ft)

⑤ Fasten torque.

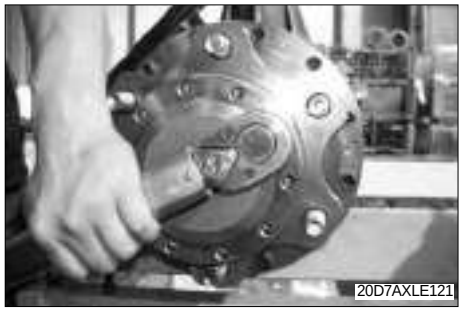

The rest part assembly

① Assemble the air breather into LH.

② Assemble the air breather into RH.

※ Spread loctite #577 on the air breather.

・Tightening torque (LH, RH) : 1.5~2 kgf・m
(11~14 lbf・ft)

https://www.forkliftpdfmanuals.com/

③ Assemble hanger bolt.

④ Fix dipstick.

⑤ Assemble the magnetic plug.

※ Spread loctite #577 on plug.

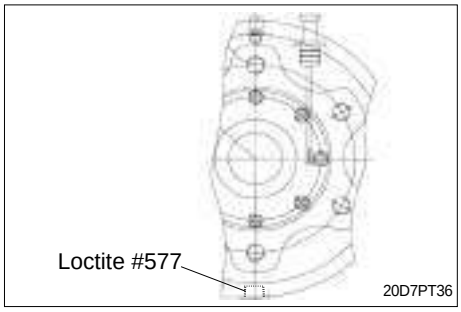

https://www.forkliftpdfmanuals.com/

SECTION 4 BRAKE SYSTEM

Group 1 Structure and function ····· 4-1
Group 2 Operational checks and troubleshooting ····· 4-8
Group 3 Tests and adjustments ····· 4-10

https://www.forkliftpdfmanuals.com/

SECTION 4 BRAKE SYSTEM

GROUP 1 STRUCTURE AND FUNCTION

1. OUTLINE

There are two brake systems, the foot brake system and the hand brake system.

The foot brake adopts the brake system of oil type at drive axle.

Oil pressure is generated in maximum 140kgf/cm^2 through brake oil input path of the left and right drive axle housing, this pressure allows the piston brake to advance and compresses a friction plate and a plate.

So when the transportation travels, it is possible to brake.

The parking brake works by the hand brake installed on parking drum which is linked to the output shaft of the forward clutch.

2. SPECIFICATION

1) DISK BRAKE

Item		Specification
Type		Wet disk brake
Master cylinder diameter (Non boosted)		33mm (1.3in)
Pedal adjustment	Pedal height	160mm
	Play	1~3mm
Brake oil		Azola ZS10 (SAE 10W hydraulic oil)

2) PARKING BRAKE

Item	Specification
Type	Ratchet, internal expanding mechanical type
Parking lever stroke / Cable stroke	12.1˚/ 11.5mm

https://www.forkliftpdfmanuals.com/

SECTION 4 BRAKE SYSTEM

GROUP 1 STRUCTURE AND FUNCTION

1. OUTLINE

There are two brake systems, the foot brake system and the hand brake system.

The foot brake adopts the brake system of oil type at drive axle.

Oil pressure is generated in maximum 140kgf/cm^2 through brake oil input path of the left and right drive axle housing, this pressure allows the piston brake to advance and compresses a friction plate and a plate.

So when the transportation travels, it is possible to brake.

The parking brake works by the hand brake installed on parking drum which is linked to the output shaft of the forward clutch.

2. SPECIFICATION

1) DISK BRAKE

Item		Specification
Type		Wet disk brake
Master cylinder diameter (Non boosted)		33mm (1.3in)
Pedal adjustment	Pedal height	160mm
	Play	1~3mm
Brake oil		Azola ZS10 (SAE 10W hydraulic oil)

2) PARKING BRAKE

Item	Specification
Type	Ratchet, internal expanding mechanical type
Parking lever stroke / Cable stroke	12.1˚/ 11.5mm

https://www.forkliftpdfmanuals.com/

3. BRAKE PEDAL AND PIPING

1) STRUCTURE

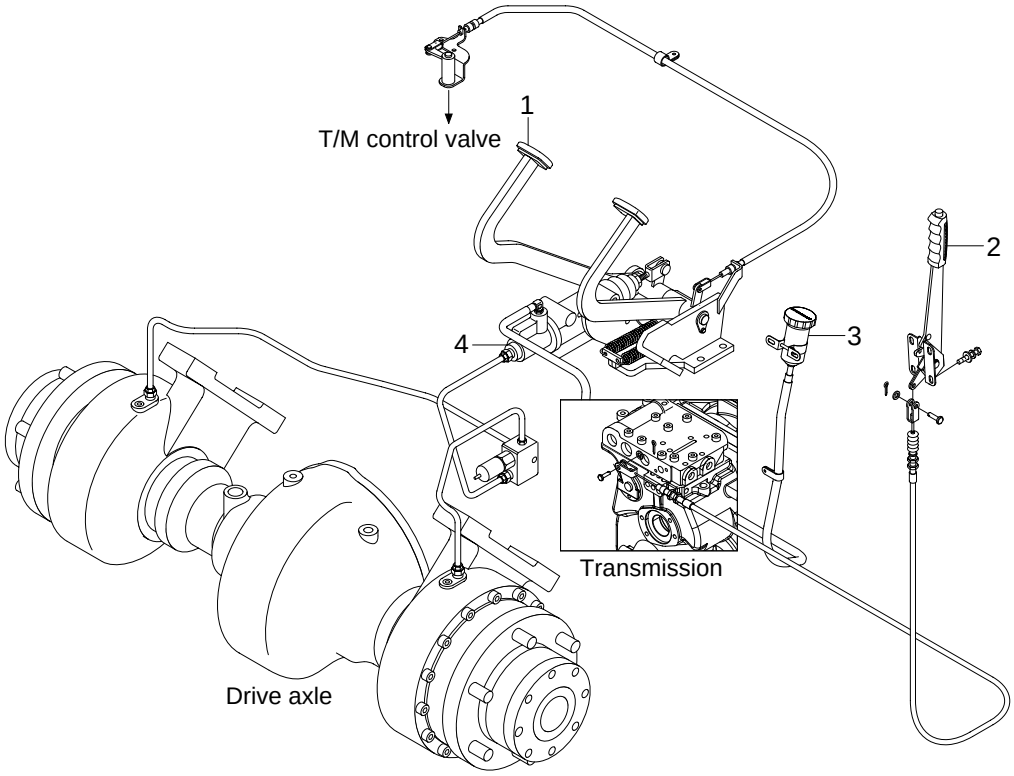

20D7BS01

1	Brake pedal	3	Reservoir tank assembly
2	Parking lever assembly	4	Brake master cylinder

https://www.forkliftpdfmanuals.com/

4. INCHING PEDAL AND LINKAGE

The brake pedal serves to actuate the hydraulic brakes on the drive axle. At the beginning of the pedal stroke, the inching spool of the transmission control valve is actuated to shift the hydraulic clutch to neutral and turn off the driving force. By treading the pedal further, the brake is applied.

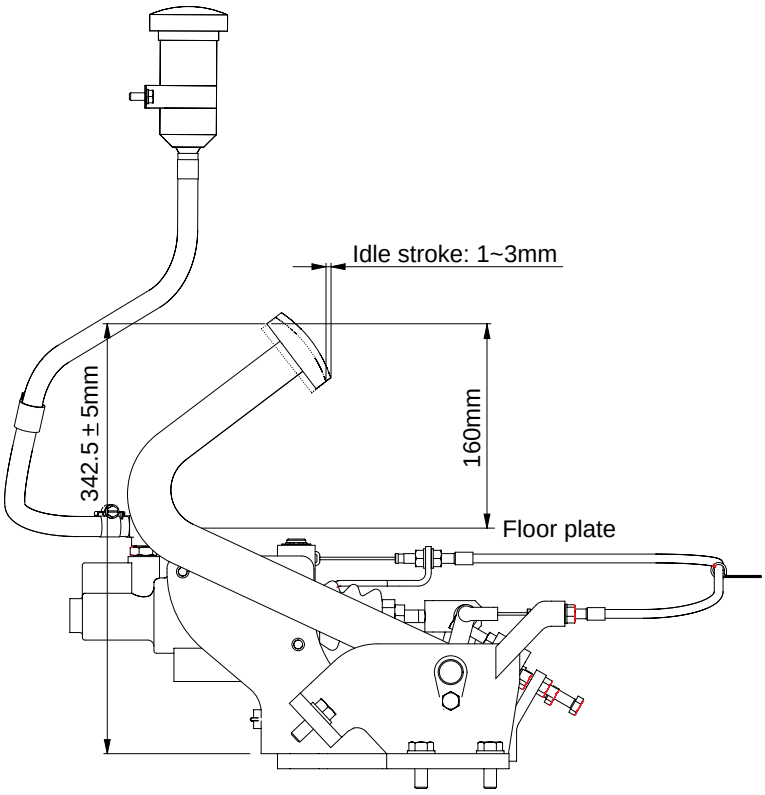

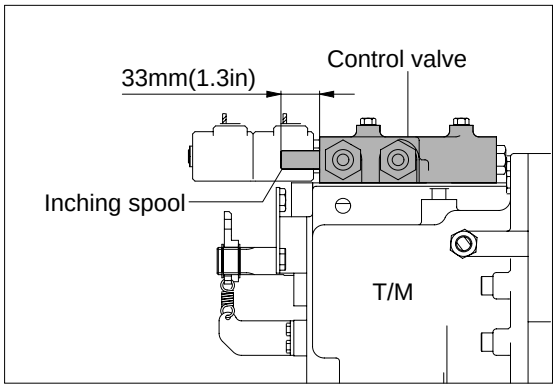

20L7BS02

https://www.forkliftpdfmanuals.com/

5. WET DISK BRAKE

1) STRUCTURE

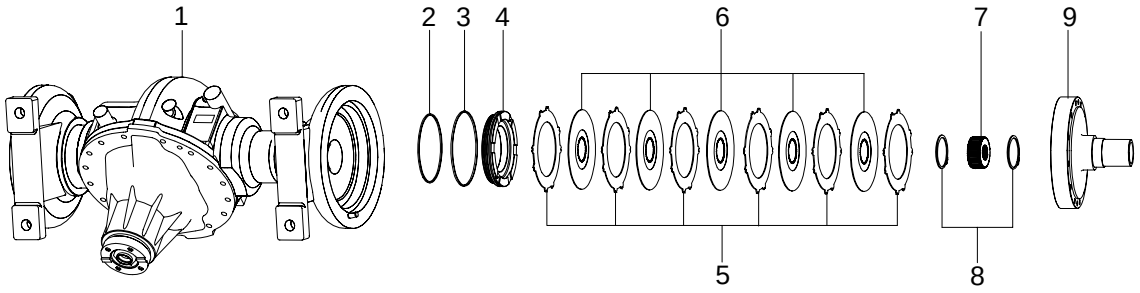

20D7PT20

1	Drive axle housing	4	Piston brake	7	Socket gear
2	Square ring	5	Plate	8	Snap ring
3	Square ring	6	Friction plate	9	Flange shaft

2) OPERATION

Sealed up structure of hydraulic disk brake system secures good brake performance even in the high humid or dusty area.

Because it is possible to use the brake semi-permanently, there is no need to replace or change the lining as drum type brake do.

Major components are 6 plates (5), 5 friction plates (6), piston brake (4), and brake housing.

Braking force is applied by restricting the drivie force from drive shaft and spline collar.

https://www.forkliftpdfmanuals.com/

6. BRAKE VALVE

1) STRUCTURE

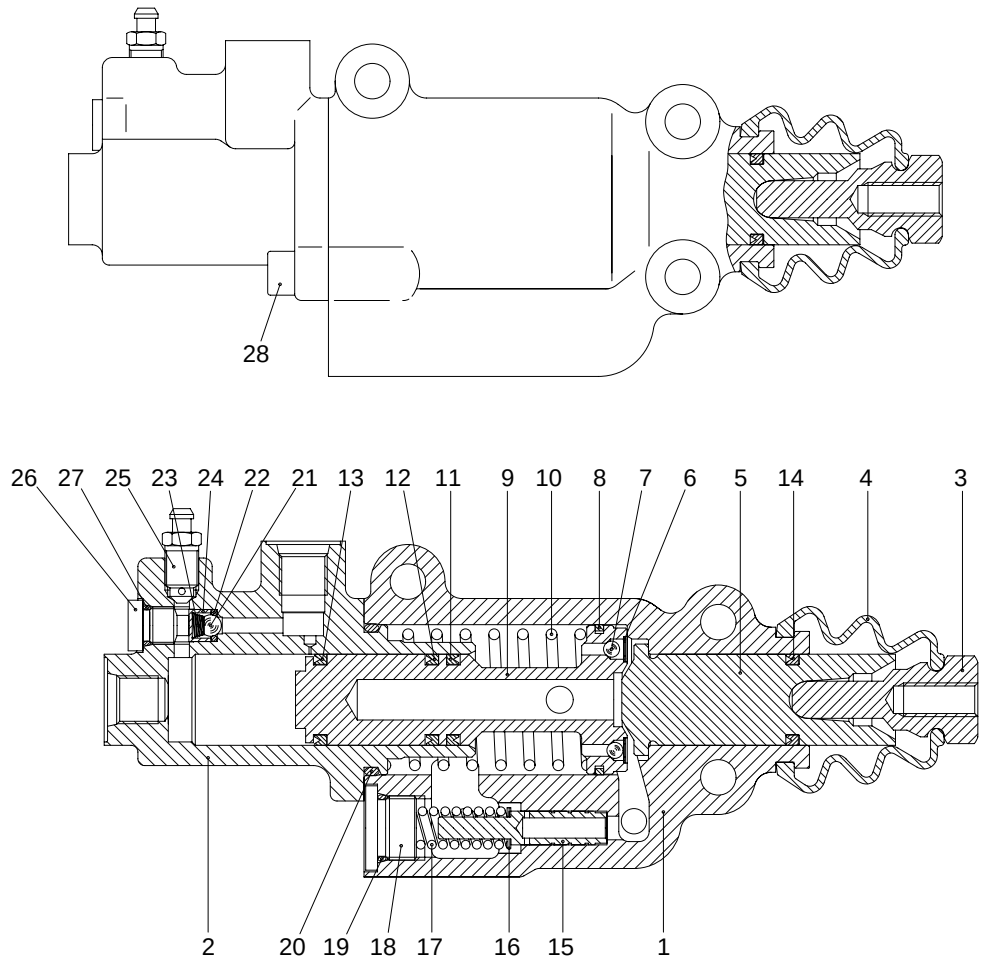

20D7BS03

1	Front housing	11	Seal	20	O-ring
2	Rear housing	12	Seal	21	Check ball
3	Push rod	13	Seal	22	O-ring
4	Bellows	14	Seal	23	Check spring
5	Master piston	15	Relief piston	24	Cage
6	Lock washer	16	Shim	25	Air bent
7	Piston ball	17	Relief spring	26	Check plug
8	Piston ring	18	Relief plug	27	O-ring
9	Servo piston	19	O-ring	28	Bolt
10	Servo spring				

https://www.forkliftpdfmanuals.com/

2) DISASSEMBLY

(1) Remove push rod (3), bellows (4), air vent (25) and bolt (28).

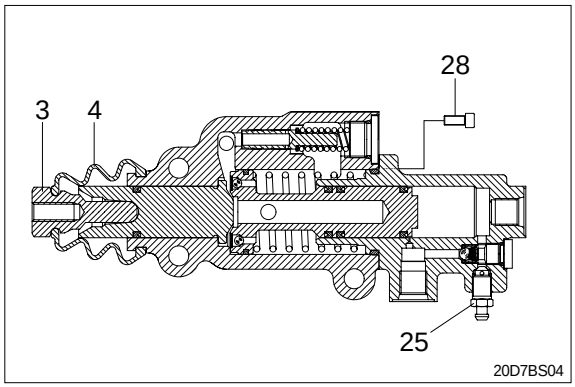

(2) Remove front housing (1), rear housing (2), servo spring (10), servo piston (9) and master piston (5).

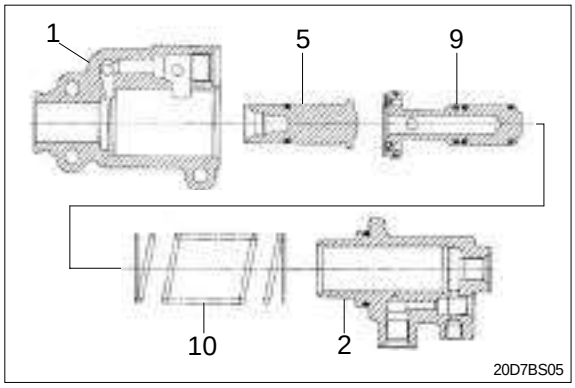

(3) Remove relief plug (18) with O-ring (19), relief spring (17), shim (16) and relief piston (15).

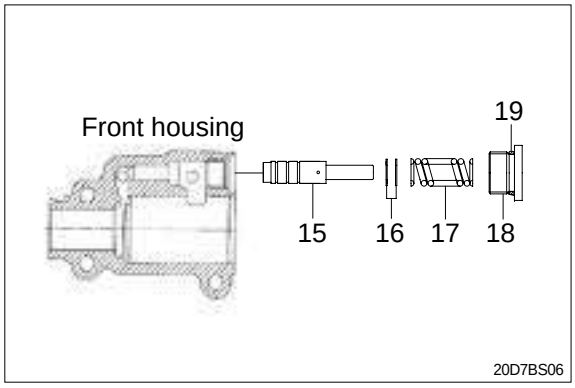

(4) Remove O-ring (20), check plug (26) with O-ring (27), cage (24), check spring (23), check ball (21) and O-ring (22).

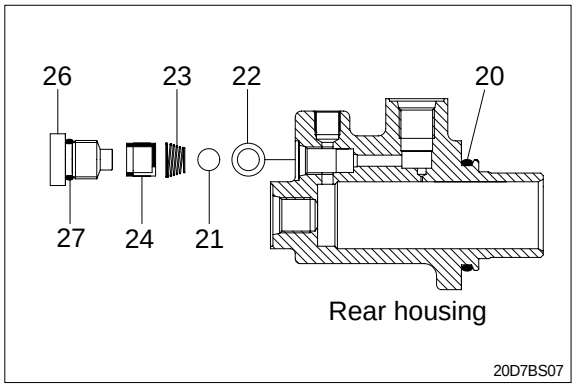

https://www.forkliftpdfmanuals.com/

3) INSPECTION AND ASSEMBLY

(1) Clean all parts thoroughly and lubricate the parts either with mineral or with hydraulic oil, according to their use destination.

(2) All single parts are to be checked for damage and replaced, if required.

(3) Assembly is in opposite order to disassembly.

(4) Seal kit : XKAU-00176

⚠ Use only brake fluid (Azola ZS10) into the compensation reservoirs.

https://www.forkliftpdfmanuals.com/

GROUP 2 OPERATIONAL CHECKS AND TROUBLESHOOTING

1. OPERATIONAL CHECKS

1) BRAKE PIPING

(1) Check pipes, hoses and joints for damage, oil leakage or interference.
(2) Operate brake pedal and check operating force when pedal in depressed. Check also change in operating force, and change in position of pedal when pedal is kept depressed.

2) PARKING BRAKE

(1) Operating force of parking lever is 35 - 40 kgf · m(253 - 290lbf · ft).
(2) Check that parking brake can hold machine in position when loaded on 20% slope. If there is no slope available, travel at low speed and check braking effect of parking brake.

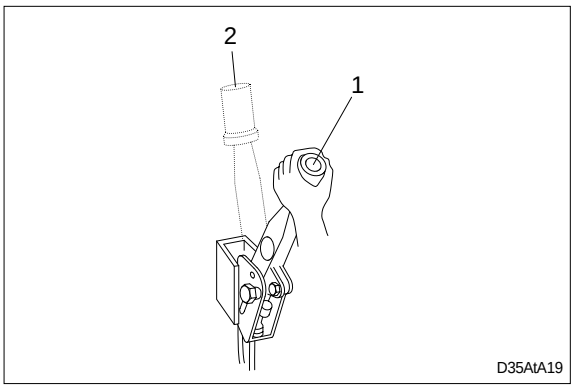

https://www.forkliftpdfmanuals.com/

2. TROUBLESHOOTING

Problem	cause	Remedy
Insufficient braking force	· Hydraulic system leaks oil. · Hydraulic system leaks air. · Disk worn. · Brake valve malfunctioning. · Hydraulic system clogged.	· Repair and add oil. · Bleed air. · Replace. · Repair or replace. · Clean.
Brake acting unevenly. (Machine is turned to one side during braking.)	· Tires unequally inflated. · Brake out of adjustment. · Disk surface roughened. · Wheel bearing out of adjustment. · Hydraulic system clogged.	· Adjust tire pressure. · Adjust. · Repair by polishing or replace. · Adjust or replace. · Clean.
Brake trailing.	· Pedal has no play. · Piston cup faulty. · Brake valve return port clogged. · Hydraulic system clogged. · Wheel bearing out of adjustment.	· Adjust. · Replace. · Clean. · Clean. · Adjust or replace.
Brake chirps	· Brake trailing. · Piston fails to return. · Disk worn. · Disk surface roughened.	· See above. Brake trailing. · Replace. · Replace. · Repair by polishing or replace.
Brake squeaks	· Disk surface roughened. · Disk worn. · Excessively large friction between disk plate.	· Repair by polishing or replace. · Replace. · Clean and apply brake grease.
Large pedal stroke	· Brake out of adjustment. · Hydraulic line sucking air. · Oil leaks from hydraulic line, or lack of oil. · Disk worn.	· Adjust. · Bleed air. · Check and repair or add oil. · Replace.
Pedal dragging.	· Twisted push rod caused by improperly fitted brake valve. · Brake valve seal faulty.	· Adjust. · Replace.

https://www.forkliftpdfmanuals.com/

GROUP 3 TESTS AND ADJUSTMENTS

1. AIR BLEEDING OF BRAKE SYSTEM

1) Air bleeding should be performed by two persons :
   One rides on truck for depressing and releasing brake pedal : the other person is on the ground and removes cap from air vent plug on wheel cylinder.
2) Block the front wheel securely and apply parking brake.
3) Start the engine.
4) Attach a vinyl tube to air vent plug and immerse other end of tube into a vessel filled with hydraulic oil.
5) Loosen air vent plug by turning it 3/4 with a wrench. Depress brake pedal to drain oil mixed with air bubbles from plug hole.
6) Depress brake pedal until no air bubbles come out of air vent plug hole.
7) After completion of air bleeding, securely tighten air vent plug. Install cap on plug.

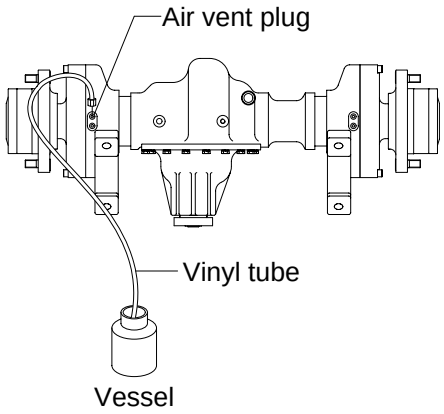

20D7BS09

2. ADJUSTMENT OF PEDAL

1) BRAKE PEDAL

(1) Pedal height from floor plate

Adjust with stopper bolt.

- Pedal height : 160mm (6.3in)

(2) Idle stroke

Adjust with rod of master cylinder

- Play : 1~3mm

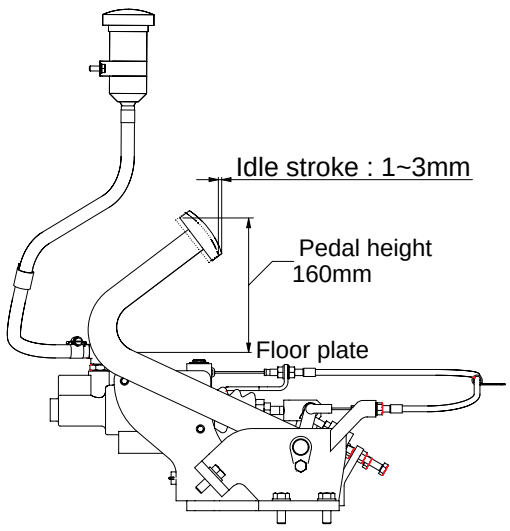

20D7BS10

https://www.forkliftpdfmanuals.com/

(3) Micro switch for parking brake (if equipped)

① After assembling parking brake and parking cable, put the parking brake lever released.

② Loosen the nut for parking brake plate to play up and down.

③ Move up the plate so that the stopper can be contacted with the pin and then reassemble nut.

- Micro switch stroke when parking brake is applied : 2~3mm (0.08 ~ 0.1in)

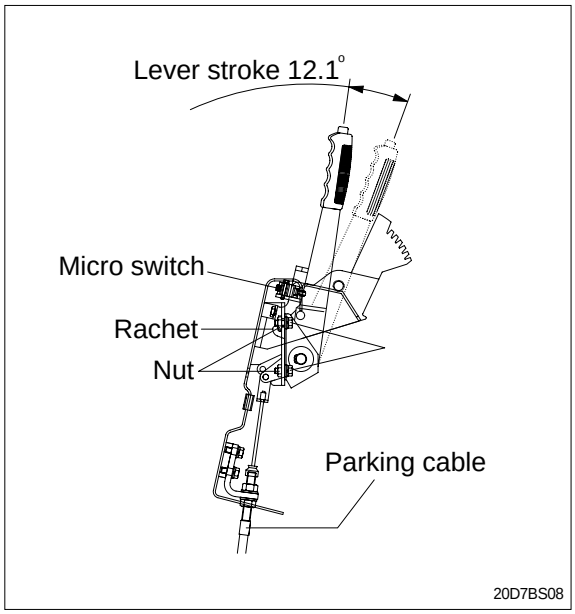

2) INCHING PEDAL

(1) Pedal height from floor plate

Adjust with stopper bolt.

- Pedal height : 160mm (6.3in)

(2) Adjust bolt so that brake pedal interconnects with inching pedal at inching pedal stroke 0mm.

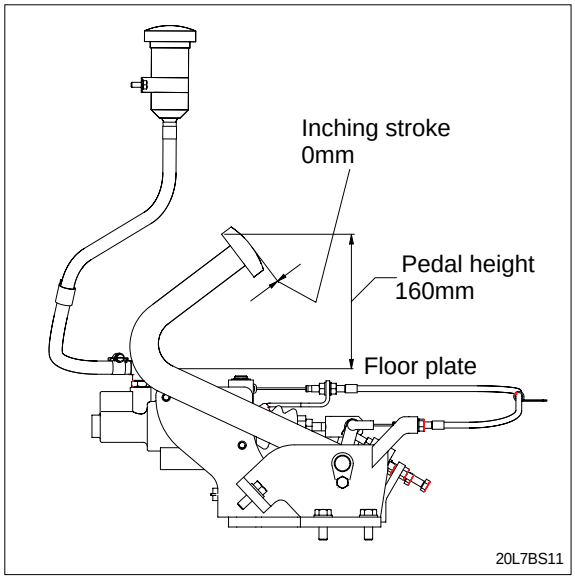

https://www.forkliftpdfmanuals.com/

SECTION 5 STEERING SYSTEM

Group 1 Structure and Function ····· 5-1
Group 2 Operational Checks and Troubleshooting ····· 5-12
Group 3 Disassembly and Assembly ····· 5-14

https://www.forkliftpdfmanuals.com/

SECTION 5 STEERING SYSTEM

GROUP 1 STRUCTURE AND FUNCTION

1. OUTLINE

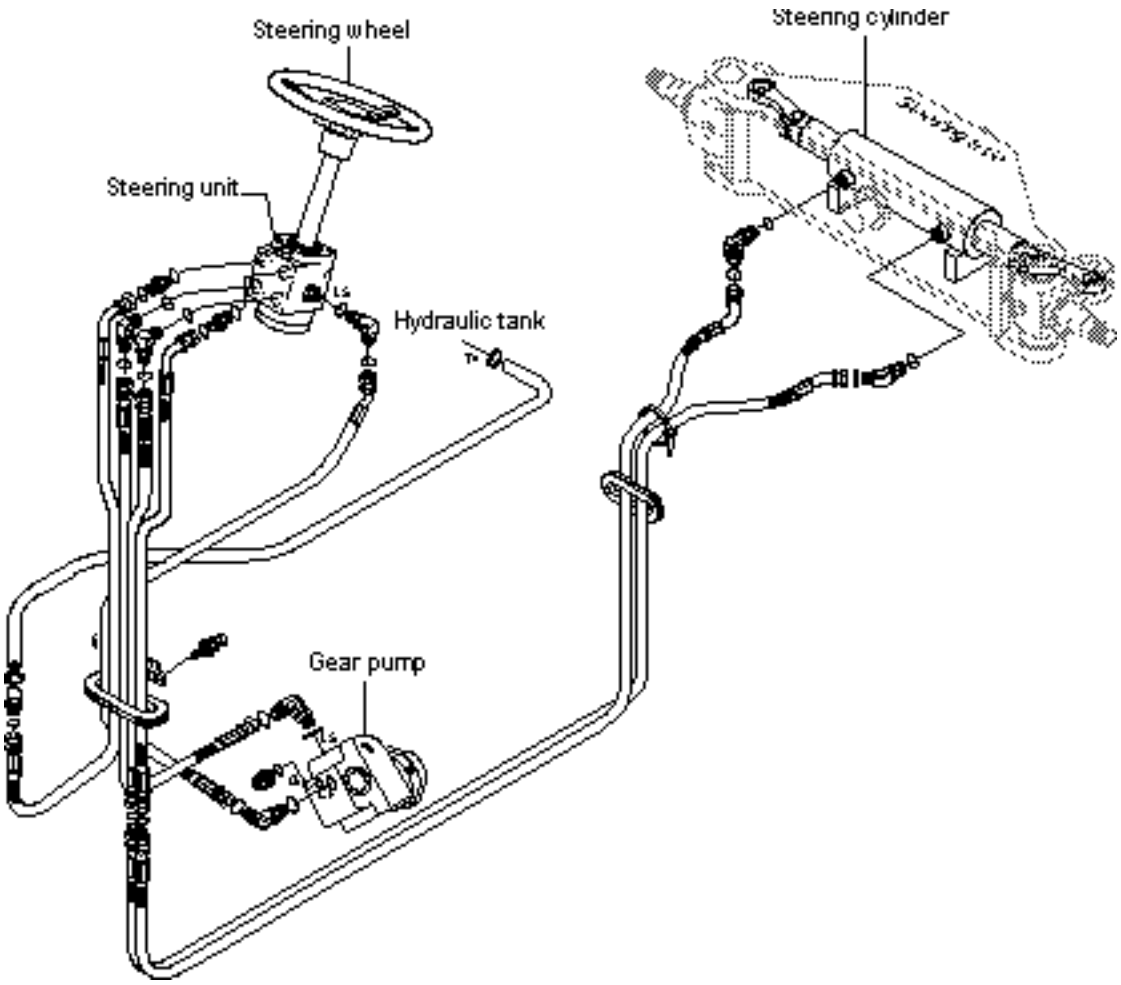

20L7SS01

The steering system for this machine is composed of steering wheel assembly, steering unit, steering cylinder, steering axle and pipings. The steering force given to the steering wheel enters the steering unit through the steering column. The required oil flow is sensed by the function of the control section of the unit, and pressurized oil delivered from the hydraulic pump is fed to the steering cylinder. The force produced by the steering cylinder moves the knuckle of steering tires through the intermediate link.

The axle body is unit structure having steering knuckles installed to its both ends by means of kingpins. Hub and wheel are mounted through bearing to spindle of knuckle.

https://www.forkliftpdfmanuals.com/

SECTION 5 STEERING SYSTEM

GROUP 1 STRUCTURE AND FUNCTION

1. OUTLINE

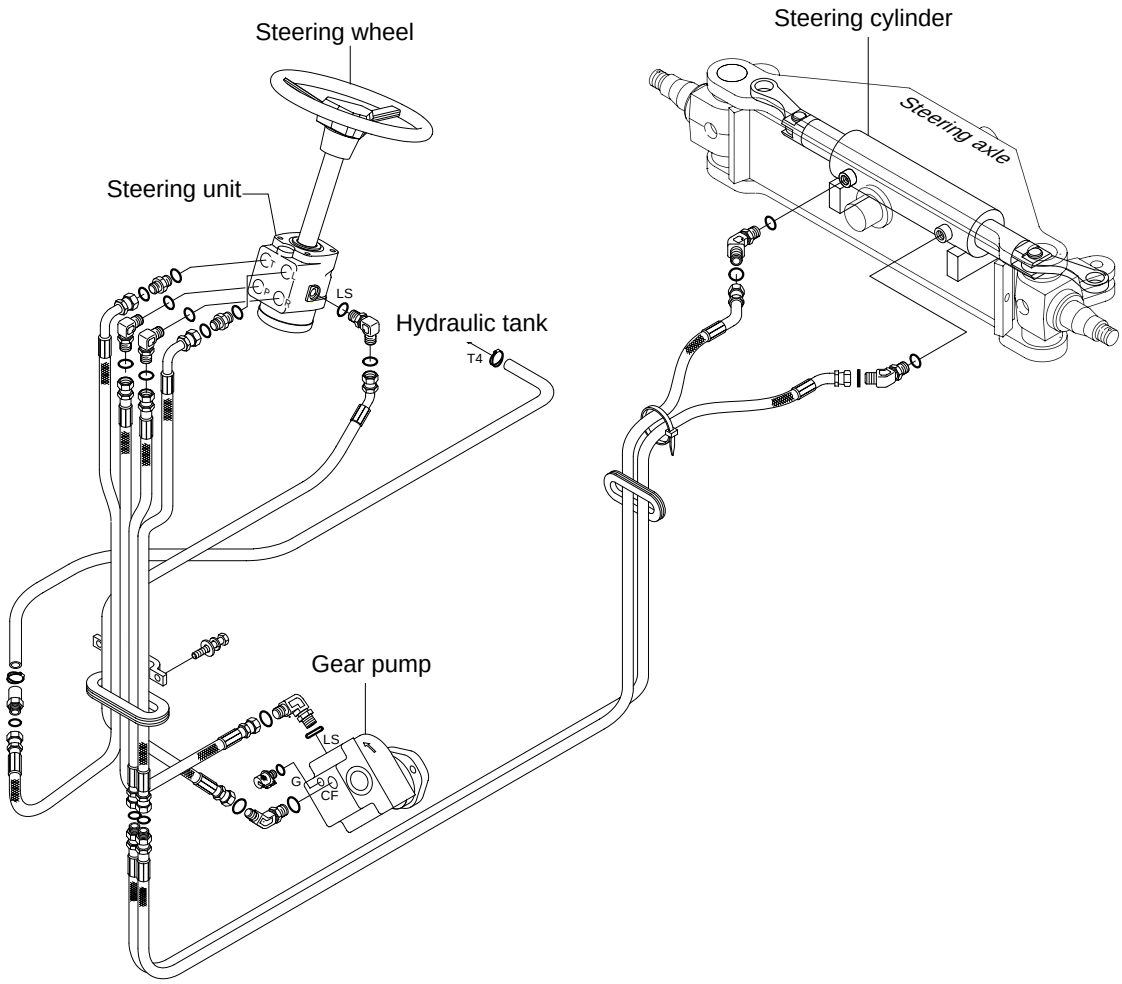

20L7SS01

The steering system for this machine is composed of steering wheel assembly, steering unit, steering cylinder, steering axle and pipings. The steering force given to the steering wheel enters the steering unit through the steering column. The required oil flow is sensed by the function of the control section of the unit, and pressurized oil delivered from the hydraulic pump is fed to the steering cylinder. The force produced by the steering cylinder moves the knuckle of steering tires through the intermediate link.

The axle body is unit structure having steering knuckles installed to its both ends by means of kingpins. Hub and wheel are mounted through bearing to spindle of knuckle.

https://www.forkliftpdfmanuals.com/

2. HYDRAULIC CIRCUIT

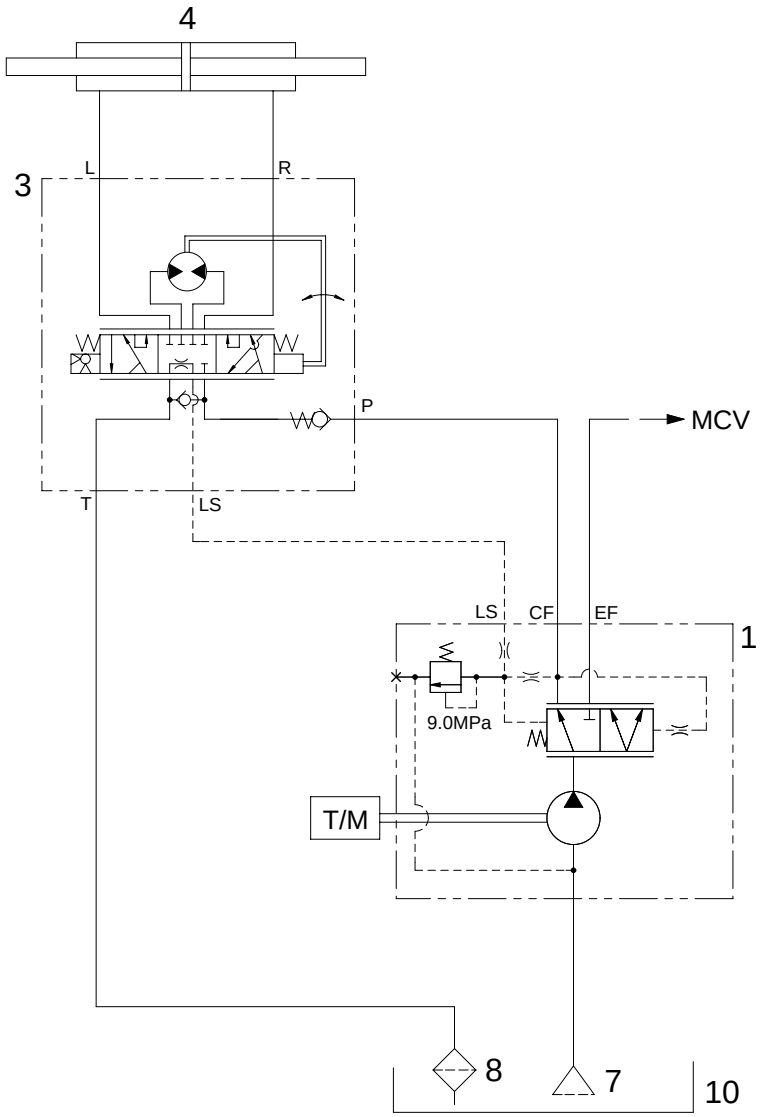

20L7SS02

1	Gear pump with priority valve	7	Suction strainer
3	Steering unit	8	Return filter
4	Steering cylinder	10	Hydraulic tank

https://www.forkliftpdfmanuals.com/

1) NEUTRAL

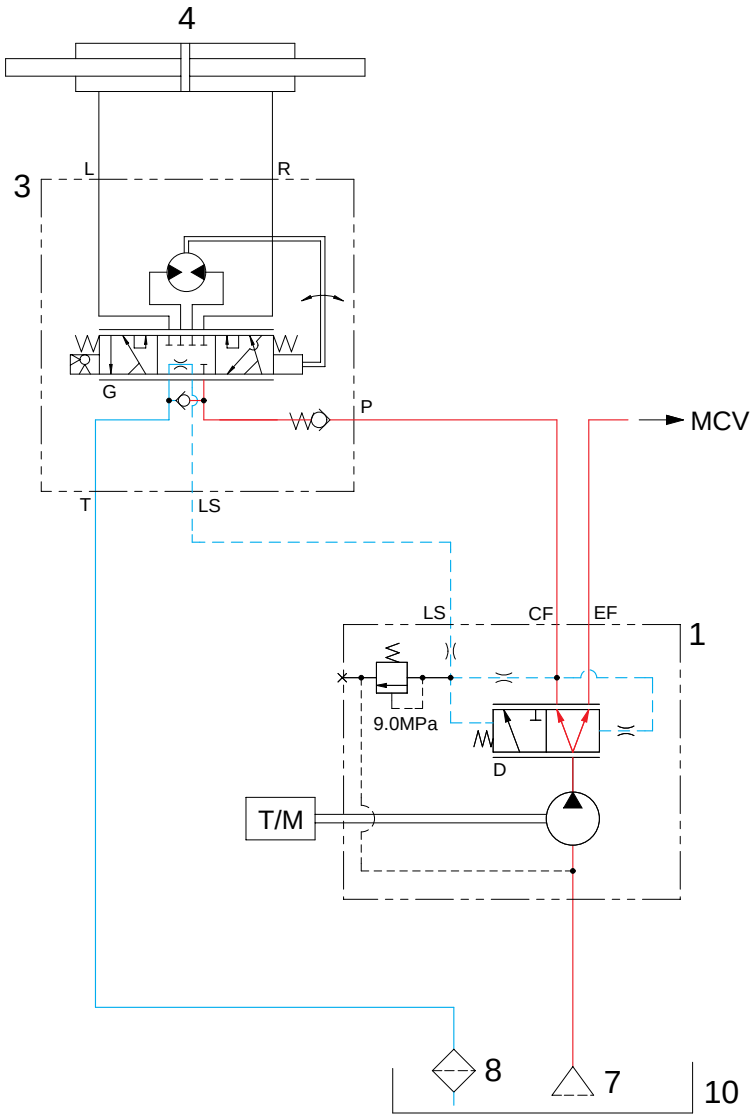

20L7SS03

The steering wheel is not being operated so control spool(G) does not move.
The oil from hydraulic gear pump(1) moves the priority valve spool(D) to the left.
Oil flow into LS port to the hydraulic tank(10).
So, the pump flow is routed to the main control valve.

https://www.forkliftpdfmanuals.com/

2) LEFT TURN

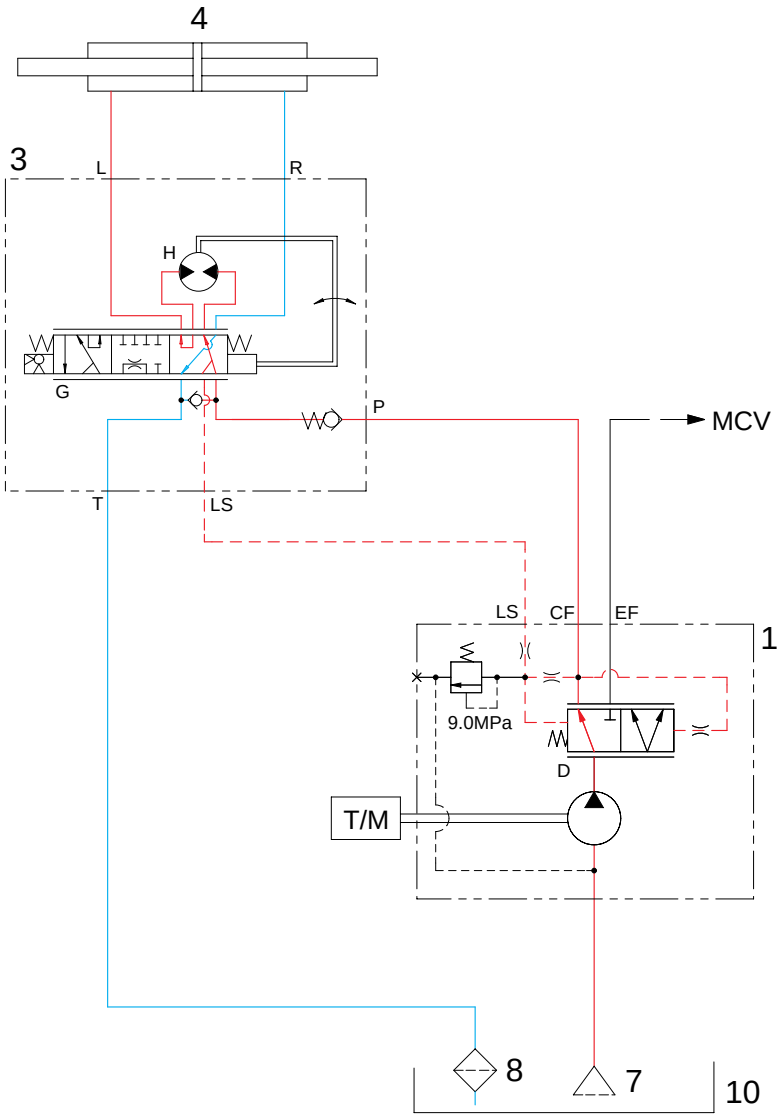

20L7SS04

When the steering wheel is turned to the left, the spool(G) within the steering unit(4) connected with steering column turns in left hand direction.
At this time, the oil discharged from the pump flows into the spool(G) within the steering unit(3) through the spool(D) of priority valve in gear pump(1) and flows to the gerotor(H).
Oil flow from the gerotor(H) flows back into the spool(G) where it is directed out of the left work port(L).
Oil returned from cylinder returns to hydraulic tank(10).
When the above operation is completed, the machine turns to the left.

https://www.forkliftpdfmanuals.com/

3) RIGHT TURN

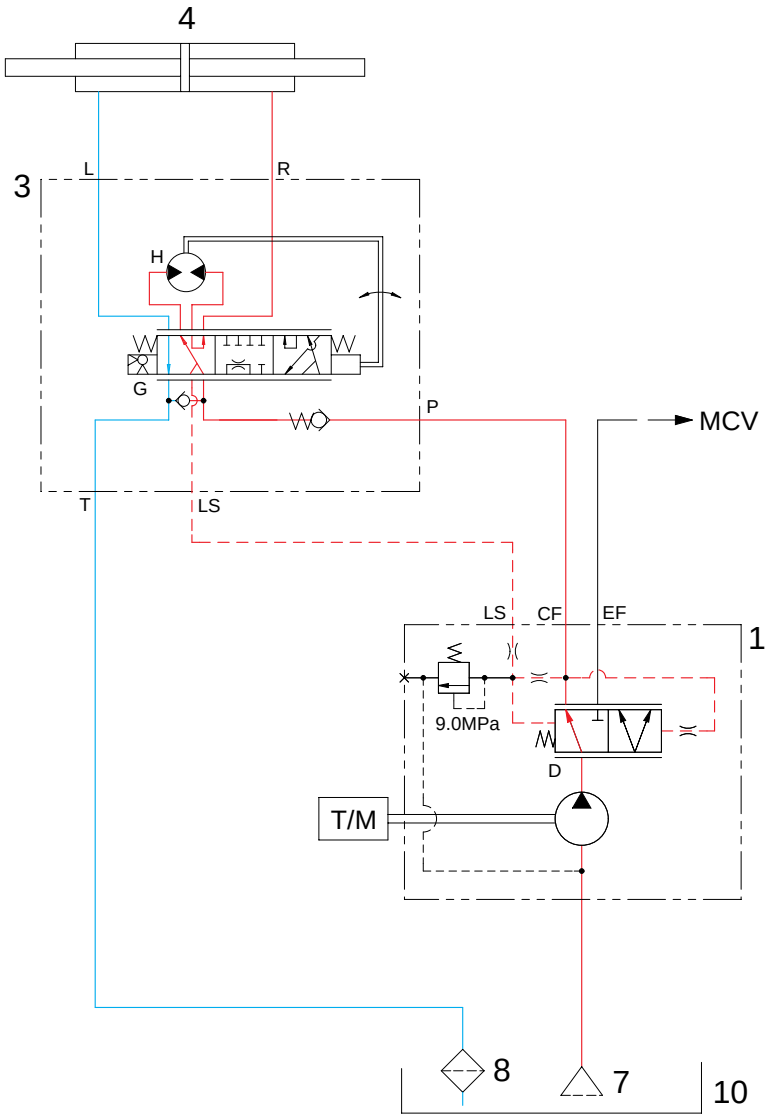

20L7SS05

When the steering wheel is turned to the right, the spool(G) within the steering unit(3) connected with steering column turns in right hand direction.
At this time, the oil discharged from the pump flows into the spool(G) within the steering unit (3) through the spool (D) of priority valve in gear pump (1) and flows to the gerotor(H).
Oil flow from the gerotor (H) flows back into the spool (G) where it is directed out of the right work port(R).
Oil returned from cylinder returns to hydraulic tank(10).
When the above operation is completed, the machine turns to the right.

https://www.forkliftpdfmanuals.com/

3. STEERING UNIT

1) STRUCTURE

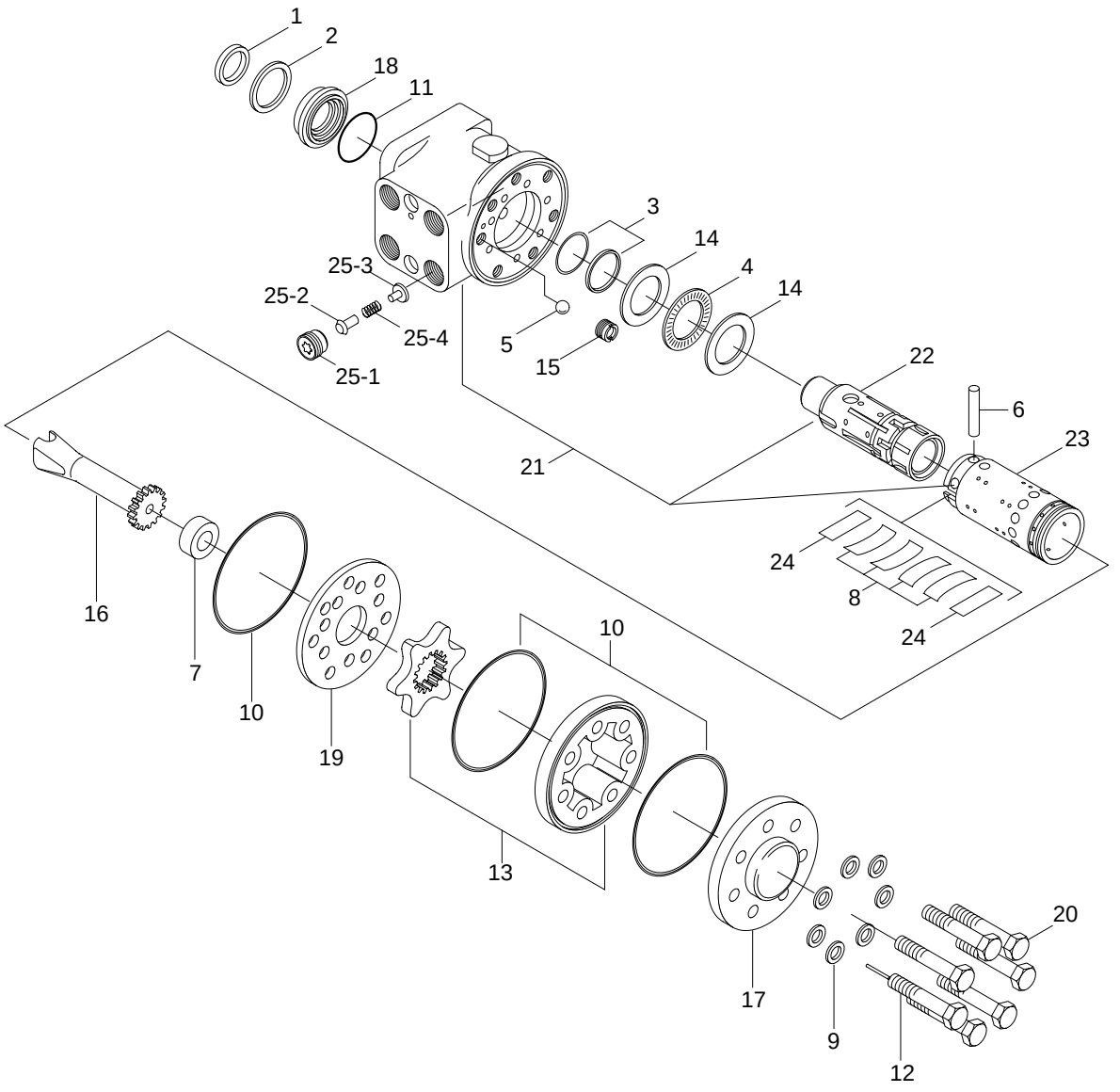

1	Dust seal	11	O-ring	21	Housing
2	Retaining ring	12	Rolled screw	22	Spool
3	Cap seal	13	Gerotor set	23	Sleeve
4	Thrust bearing	14	Bearing race	24	Plate spring
5	Ball	15	Bore screw	25	P-port check valve.
6	Pin	16	Drive	25-1	Plug
7	Spacer	17	End cap	25-2	Poppet
8	Center spring	18	Gland bushing	25-3	Spring seat
9	Washer	19	Plate	25-4	Spring
10	O-ring	20	Cap screw		

https://www.forkliftpdfmanuals.com/

2) OPERATION

The steering unit is composed of the control valve(rotary valve) and the metering device. The control valve controls the flow of oil from the pump in the interior of the unit depending on the condition of the steering wheel. The metering device is a kind of hydraulic motor composed of a stator and a rotor. It meters the required oil volume, feeds the metered oil to the power cylinder and detects cylinder's motion value, that is, cylinder's motion rate.

When the steering wheel is turned, the spool turns, the oil path is switched and the oil is fed into the metering device. As a result, the rotor is caused to run by oil pressure, and the sleeve is caused to run through the drive shaft and cross pin. Therefore, when the spool is turned, the spool turns by the same value in such a manner that it follows the motion of the spool. Steering motion can be accomplished when this operation is performed in a continuous state.

⚠ **If the hoses of the steering system are incorrectly connected, the steering wheel can turn very rapidly when the engine is started. Keep clear of the steering wheel when starting the engine.**

The centering spring for the spool and sleeve is provided to cause the valve to return to the neutral position. It is therefore possible to obtain a constant steering feeling, which is transmitted to the hands of the driver. Return to the center position occurs when the steering wheel is released.

https://www.forkliftpdfmanuals.com/

4. STEERING AXLE

1) STRUCTURE

(1) 20L/25L/30L-7, 20G/25G/30G-7

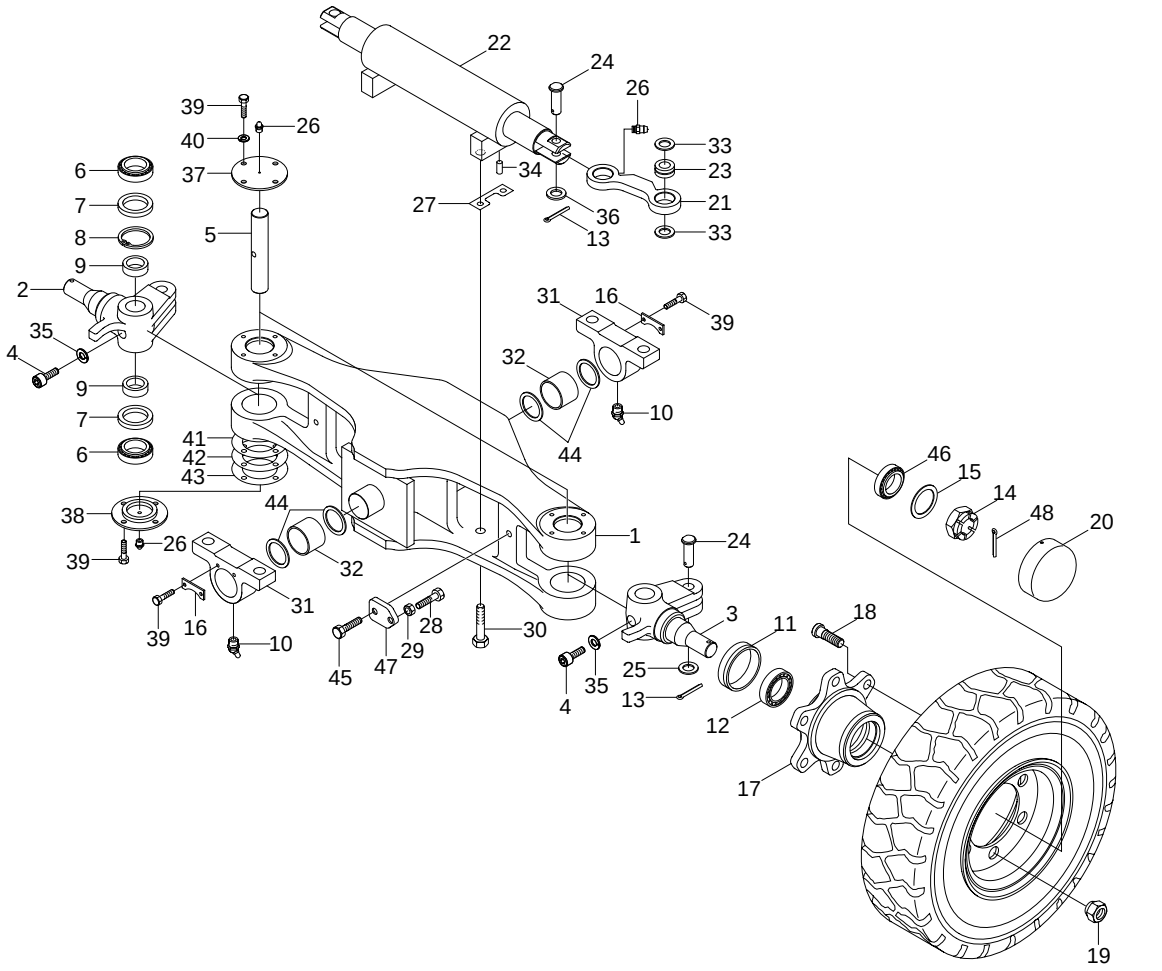

20D7SS07

1	Steering axle	17	Hub	33	Thrust washer
2	Knuckle-RH	18	Hub bolt	34	Pin
3	Knuckle-LH	19	Hub nut	35	Spring washer
4	Special bolt	20	Hub cap	36	Hardened washer
5	King pin	21	Steering link	37	Upper cover
6	Taper roller bearing	22	Steering cylinder	38	Lower cover
7	Oil seal	23	SPH plain bearing	39	Hex bolt
8	Retaining ring	24	Steer link pin	40	Spring wahser
9	Collar	25	Plain washer	41	Shim (0.1t)
10	Grease nipple	26	Grease nipple	42	Shim (0.15t)
11	Oil seal	27	Lock plate	43	Shim (0.3t)
12	Taper roller bearing	28	Bolt	44	Spacer
13	Split pin	29	Hex nut	45	Hex bolt
14	Nut	30	Hex bolt	46	Taper roller bearing
15	Washer	31	Trunnion block	47	Plate
16	Plate	32	Bushing	48	Split pin

https://www.forkliftpdfmanuals.com/

(2) 20LC/25LC/30LC-7, 20GC/25GC/30GC-7

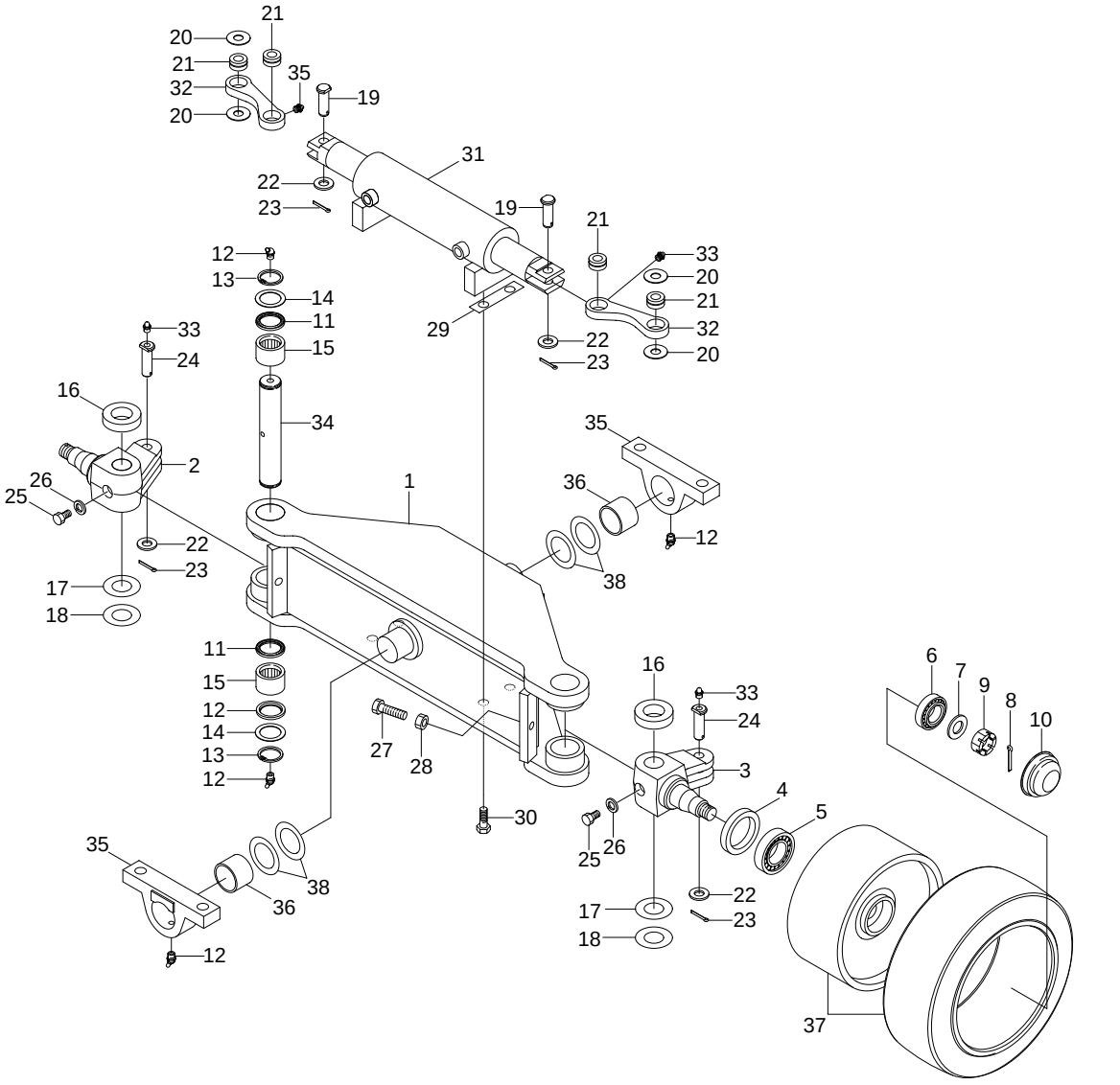

1	Steering axle	14	King pin washer	27	Hex bolt
2	Knuckle-RH	15	Needle bearing	28	Hex nut
3	Knuckle-LH	16	Thrust bearing	29	Lock plate
4	Oil seal	17	Shim (0.13t)	30	Hex bolt
5	Taper roller bearing	18	Shim (0.25t)	31	Steering cylinder
6	Taper roller bearing	19	Clevis pin	32	Link
7	Plain washer	20	Thrust washer	33	Grease nipple
8	Split pin	21	Bearing	34	King pin
9	Castle nut	22	Plain washer	35	Block
10	Hub cap	23	Split pin	36	Bushing
11	Oil seal	24	Clevis pin	37	Rear tire & rim assy
12	Grease nipple	25	Special bolt	38	Shim (0.5t, 1.0t)
13	Retaining ring	26	Spring washer		

https://www.forkliftpdfmanuals.com/

2) TIGHTENING TORQUE AND SPECIFICATION

(1) 20L/25L/30L-7, 20G/25G/30G-7

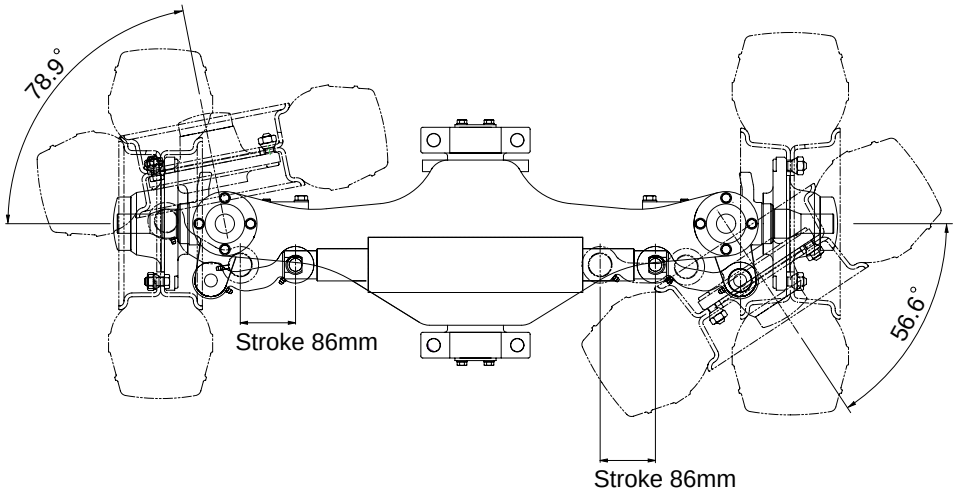

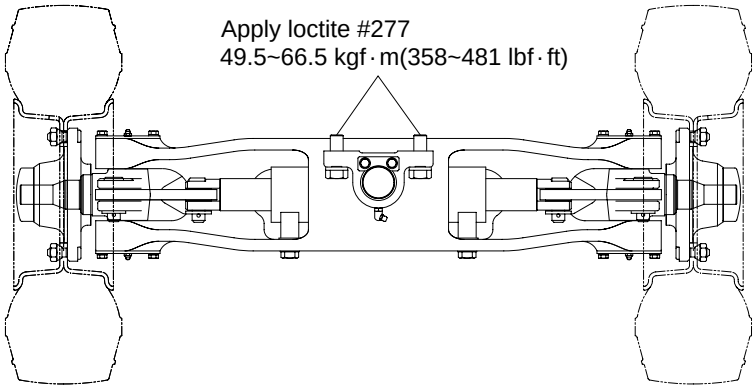

20D7SS08

Type	Unit	Center pin support single shaft
Structure of knuckle	-	Elliott type
Toe-in	degree	0
Camber	degree	0
Caster	degree	0
King pin angle	degree	0
Max steering angle of wheels(Inside/Outside)	degree	78.9 / 56.6
Tread	mm(in)	980 (38.6)

https://www.forkliftpdfmanuals.com/

(2) 20LC/25LC/30LC-7, 20GC/25GC/30GC-7

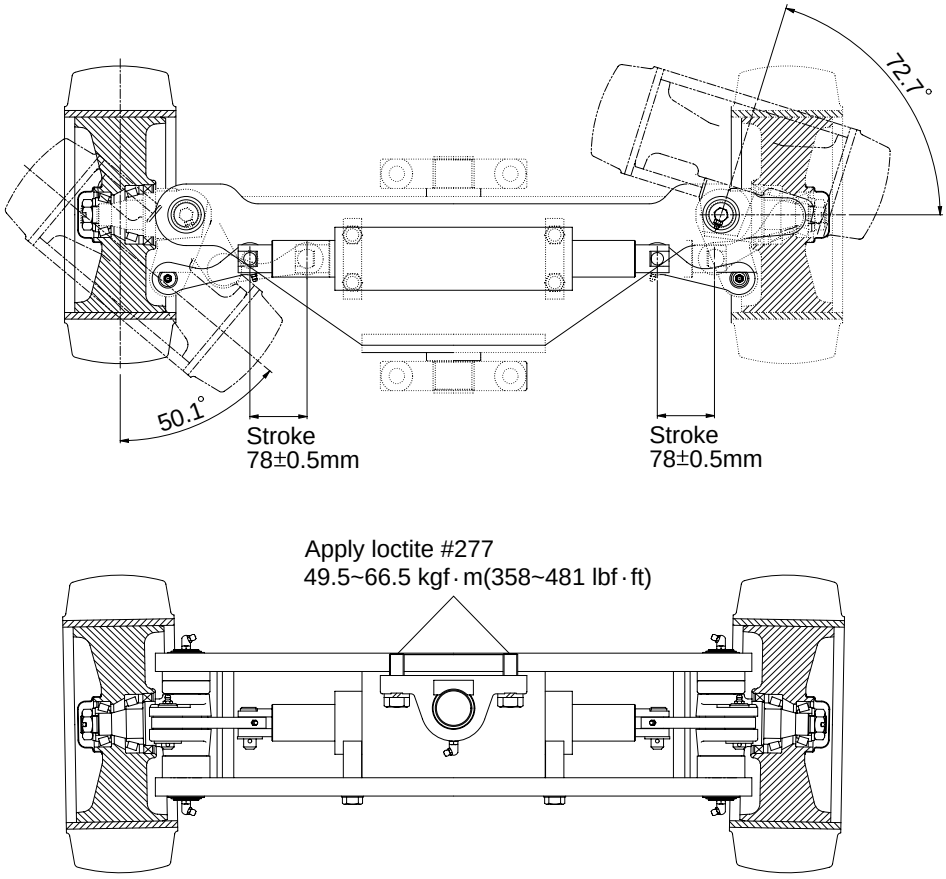

20L7SS08

Type	Unit	Center pin support single shaft
Structure of knuckle	-	Elliott type
Toe-in	degree	0
Camber	degree	0
Caster	degree	0
King pin angle	degree	0
Max steering angle of wheels(Inside/Outside)	degree	72.7 / 50.1
Tread	mm(in)	910 (35.8)

https://www.forkliftpdfmanuals.com/

GROUP 2 OPERATIONAL CHECKS AND TROUBLESHOOTING

1. OPERATIONAL CHECKS

Check item	Checking procedure
Steering wheel 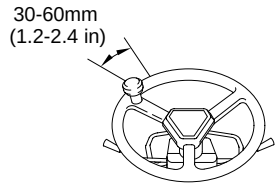 	· Set rear wheels facing straight forward, then turn steering wheel to left and right. Measure range of steering wheel movement before rear wheel starts to move. Range should be 30~60㎜ at rim of steering wheel. If play is too large, adjust at gear box. Test steering wheel play with engine at idling.
Knuckle	· Check knuckle visually or use crack detection method. If the knuckle is bent, the tire wear is uneven, so check tire wear.
Steering axle	· Put camber gauge in contact with hub and measure camber. If camber is not within 0±0.5° ; rear axle is bent. · Ask assistant to drive machine at minimum turning radius. · Fit bar and a piece of chalk at outside edge of counterweight to mark line of turning radius. · If minimum turning radius is not within±100㎜ (±4in)of specified value, adjust turning angle stopper bolt. Min turning radius(Outside)
Hydraulic pressure of power steering	Remove plug from outlet port of flow divider and install oil pressure gauge. Turn steering wheel fully and check oil pressure. ※ Oil pressure : 90kgf/cm² (1280psi)

20L-7, 20G-7	2252㎜(89in)	20LC-7, 20GC-7	2038㎜(80in)
25L-7, 25G-7	2300㎜(91in)	25LC-7, 25GC-7	2074㎜(82in)
30L-7, 30G-7	2393㎜(94in)	30LC-7, 30GC-7	2116㎜(83in)

2. TROUBLESHOOTING

Problem	Cause	Remedy
Steering wheel drags.	· Low oil pressure. · Bearing faulty. · Spring spool faulty. · Reaction plunger faulty. · Ball-and-screw assembly faulty. · Sector shaft adjusting screw excessively tight. · Gears poorly meshing. · Flow divider coil spring fatigued.	· Check lockout. Repair. · Clean or replace. · Clean or replace. · Replace. · Clean or replace. · Adjust. · Check and correct meshing. · Replace.
Steering wheel fails to return smoothly.	· Bearing faulty. · Reaction plunger faulty. · Ball-and-screw assy faulty · Gears poorly meshing.	· Clean or replace. · Replace. · Clean or replace. · Check and correct meshing.

https://www.forkliftpdfmanuals.com/

Problem	Cause	Remedy
Steering wheel turns unsteadily.	· Lockout loosening. · Metal spring deteriorated.	· Retighten. · Replace.
Steering system makes abnormal sound or vibration.	· Gear backlash out of adjustment. · Lockout loosening. · Air in oil circuit.	· Adjust. · Retighten. · Bleed air.
Abnormal sound heard when steering wheel is turned fully	Valve · Faulty. (Valve fails to open.) Piping · Pipe(from pump to power steering cylinder) dented or clogged.	 · Adjust valve set pressure and check for specified oil pressure. · Repair or replace.
Piping makes abnormal sounds.	Oil pump · Lack of oil. · Oil inlet pipe sucks air. · Insufficient air bleeding.	 · Add oil. · Repair. · Bleed air completely.
Valve or valve unit makes abnormal sounds.	Oil pump · Oil inlet pipe sucks air. Valve · Faulty. (Unbalance oil pressure) Piping · Pipe(from pump to power steering) dented or clogged. · Insufficient air bleeding.	 · Repair or replace. · Adjust valve set pressure and check specified oil pressure. · Repair or replace. · Bleed air completely.
Insufficient or variable oil flow.	· Flow control valve orifice clogged.	· Clean
Insufficient or variable discharge pressure.	Piping · Pipe(from tank to pipe) dented or clogged.	 · Repair or replace.
Steering cylinder head leakage (Piston rod)	· Packing foreign material. · Piston rod damage. · Rod seal damage and distortion. · Chrome gilding damage.	· Replace · Grind surface with oil stone. · Replace · Grind
Steering cylinder head thread (A little bit leak is no problem)	· O-ring damage.	· Replace
Welding leakage	· Cylinder tube damage.	· Tube replace.
Rod	· Tube inside damage. · Piston seal damage and distortion	· Grind surface with oil store. · Replace
Piston rod bushing inner diameter excessive gap	· Bushing wear.	· Replace

https://www.forkliftpdfmanuals.com/

GROUP 3 DISASSEMBLY AND ASSEMBLY

1. STEERING UNIT

1) STRUCTURE

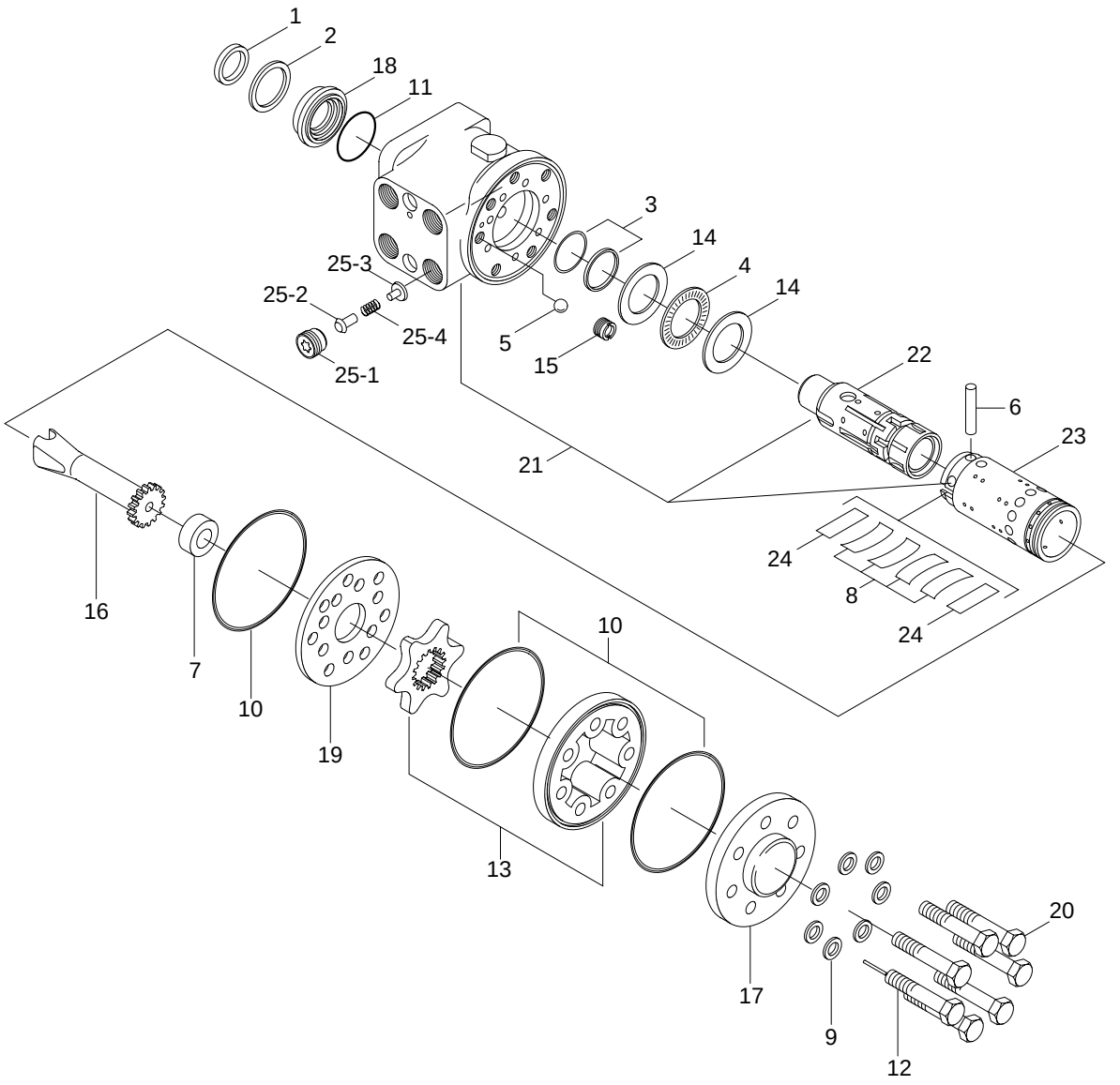

20D7SS06

1	Dust seal	11	O-ring	21	Housing
2	Retaining ring	12	Rolled screw	22	Spool
3	Cap seal	13	Gerotor set	23	Sleeve
4	Thrust bearing	14	Bearing race	24	Plate spring
5	Ball	15	Bore screw	25	P-port check valve.
6	Pin	16	Drive	25-1	Plug
7	Spacer	17	End cap	25-2	Poppet
8	Center spring	18	Gland bushing	25-3	Spring seat
9	Washer	19	Plate	25-4	Spring
10	O-ring	20	Cap screw		

https://www.forkliftpdfmanuals.com/

2) TOOLS

(1) Holding tool.

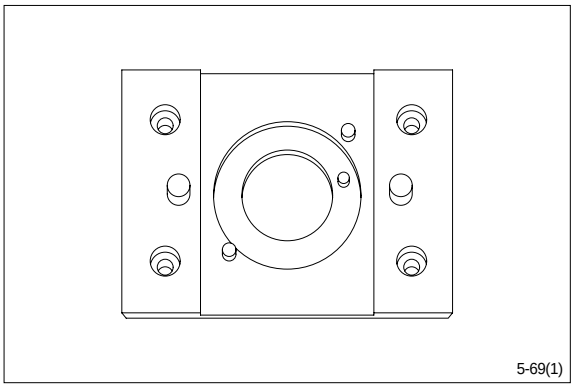

5-69(1)

(2) Assembly tool for O-ring and kin-ring.

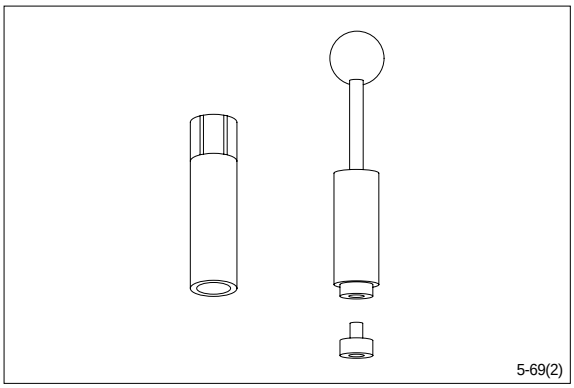

5-69(2)

(3) Assembly tool for lip seal.

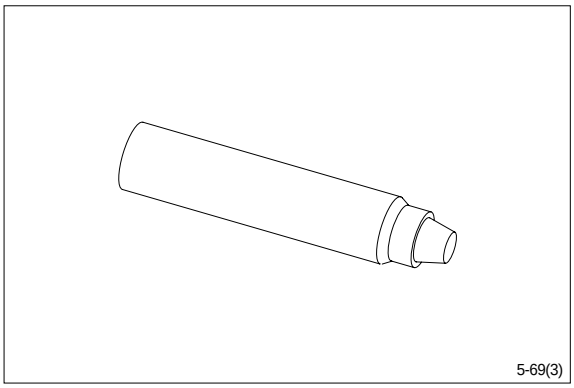

5-69(3)

(4) Assembly tool for cardan shaft.

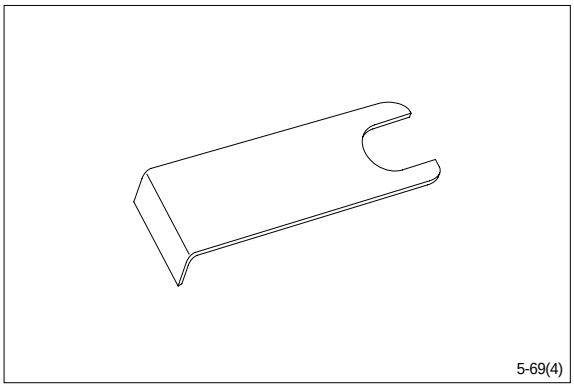

5-69(4)

https://www.forkliftpdfmanuals.com/

(5) Assembly tool for dust seal.

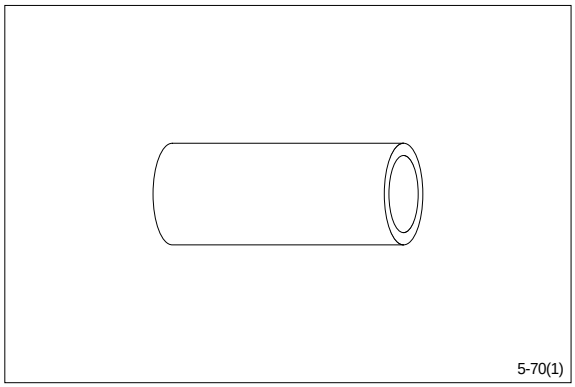

(6) Torque wrench 0~7.1kgf · m
(0~54.4lbf · ft)
13mm socket spanner
6, 8mm and 12mm hexagon sockets
12mm screwdriver
2mm screwdriver
13mm ring spanner
6, 8 and 12mm hexagon socket spanners
Plastic hammer
Tweezers

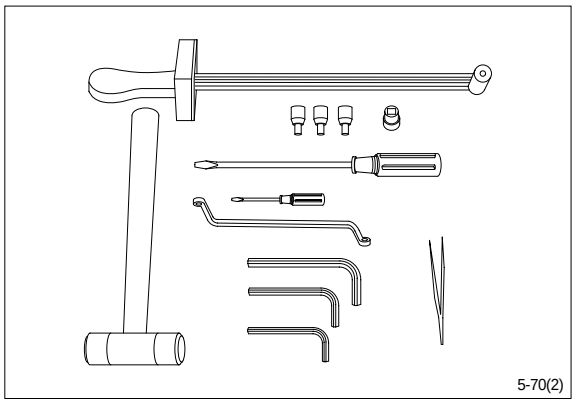

3) TIGHTENING TORQUE

L : Left port
R : Right port
T : Tank
P : Pump

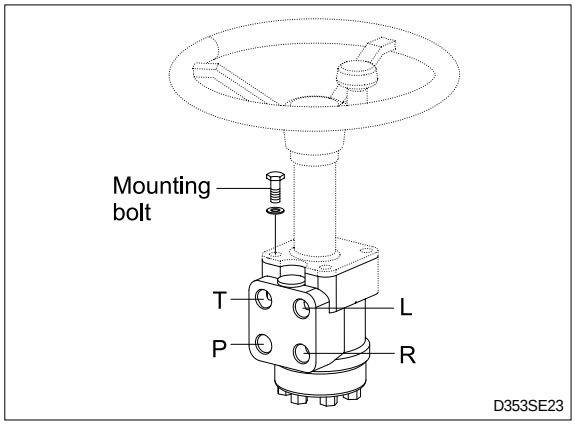

Port	Size	Torque [kgf · m(lbf · ft)]
L	3/4 UNF - 16	13 (94)
R	3/4 UNF - 16	13 (94)
T	3/4 UNF - 16	13 (94)
P	3/4 UNF - 16	13 (94)
Mounting bolt	M10×1.5	5.0 ±1.0 (36±7.2)

https://www.forkliftpdfmanuals.com/

4) DISASSEMBLY

(1) Disassemble steering column from steering unit and place the steering unit in the holding tool.
Screw out the screws in the end cover(6-off plus one special screw).

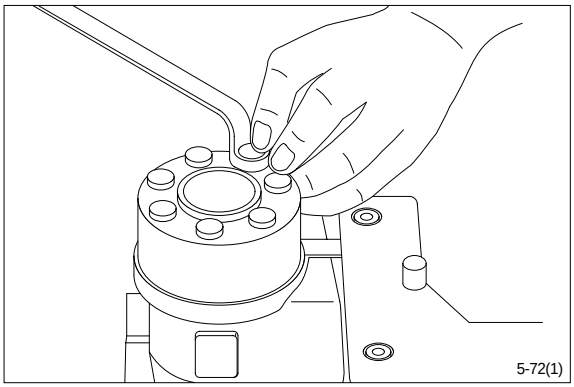
5-72(1)

(2) Remove the end cover, sideways.

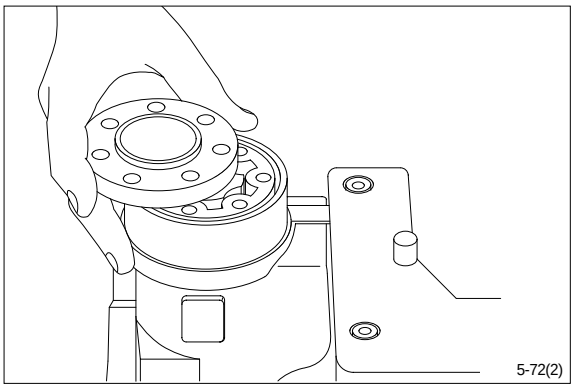
5-72(2)

(3) Lift the gearwheel set(With spacer if fitted) off the unit.
Take out the two O-rings.

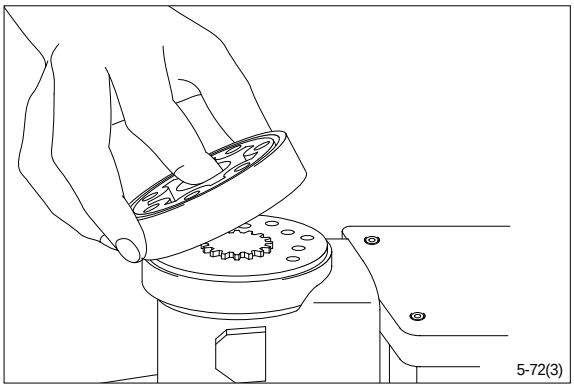
5-72(3)

(4) Remove cardan shaft.

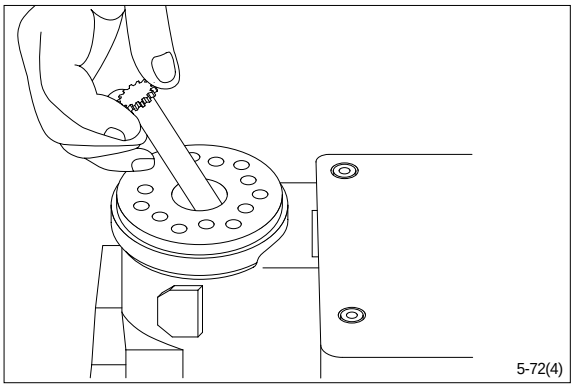
5-72(4)

https://www.forkliftpdfmanuals.com/

(5) Remove distributor plate.

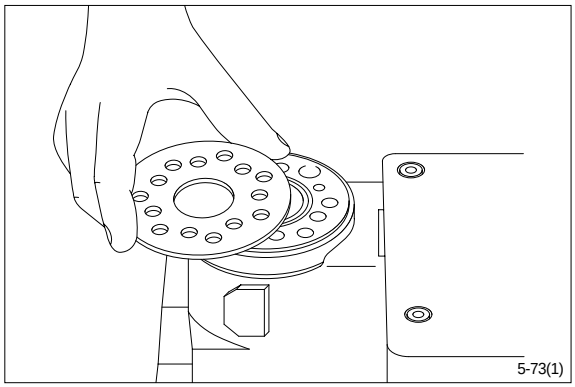
5-73(1)

(6) Screw out the threaded bush over the check valve.

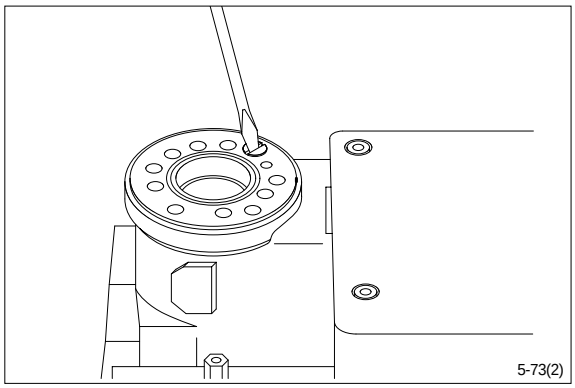
5-73(2)

(7) Remove O-ring.

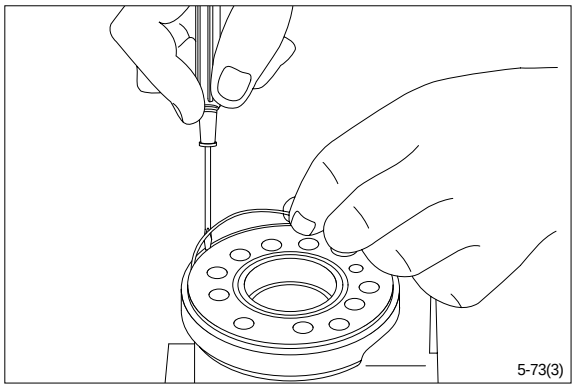
5-73(3)

(8) Take care to keep the cross pin in the sleeve and spool horizontal. The pin can be seen through the open end of the spool. Press the spool inwards and the sleeve, ring, bearing races and thrust bearing will be pushed out of the housing together.

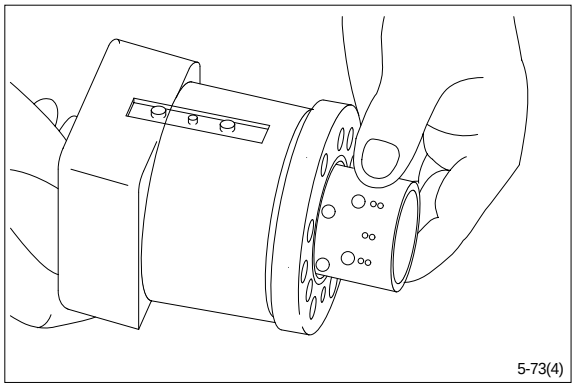
5-73(4)

https://www.forkliftpdfmanuals.com/

(9) Take ring, bearing races and thrust bearing from sleeve and spool. The outer (Thin) bearing race can sometimes "stick" in the housing, therefore check that it has come out.

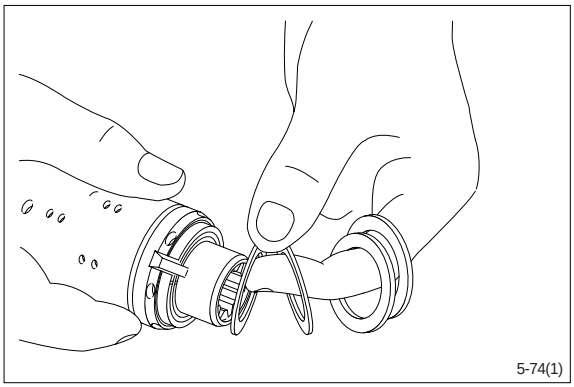
5-74(1)

(10) Press out the cross pin. Use the special screw from the end cover.

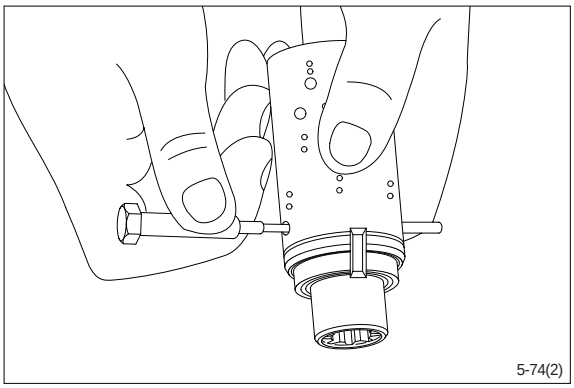
5-74(2)

※ **A small mark has been made with a pumice stone on both spool and sleeve close to one of the slots for the neutral position springs(See drawing).**
If the mark is not visible, remember to leave a mark of your own on sleeve and spool before the neutral position springs are disassembled.

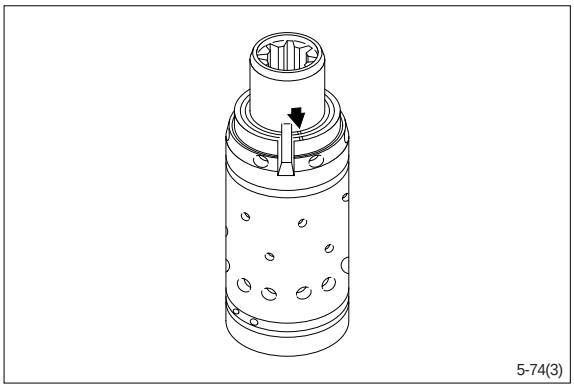
5-74(3)

(11) Carefully press the spool out of the sleeve.

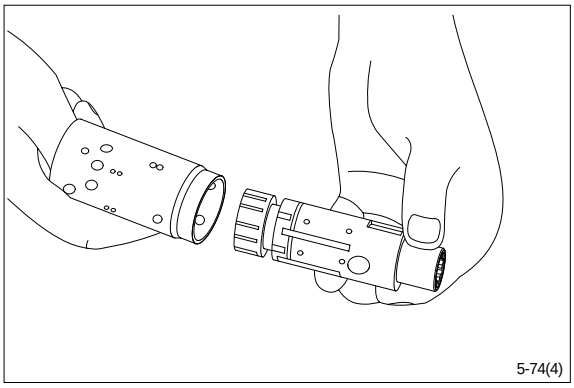
5-74(4)

https://www.forkliftpdfmanuals.com/

(12) Press the neutral position springs out of their slots in the spool.

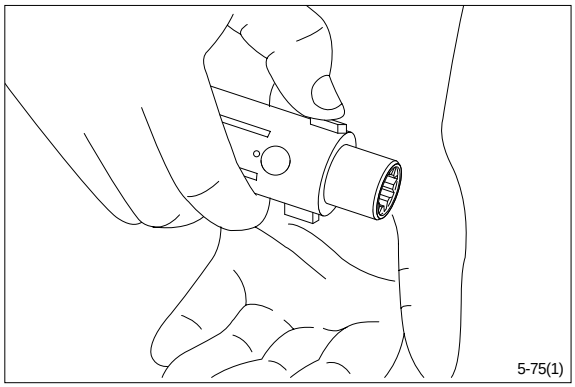

(13) Remove dust seal and O-ring.

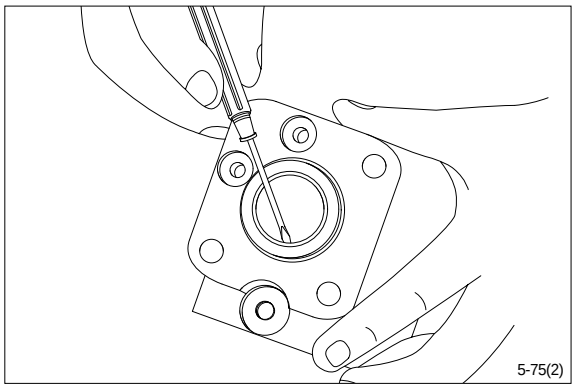

Disassembling the pressure relief valve

(14) Screw out the plug using an 8mm hexagon socket spanner.
Remove seal washers.

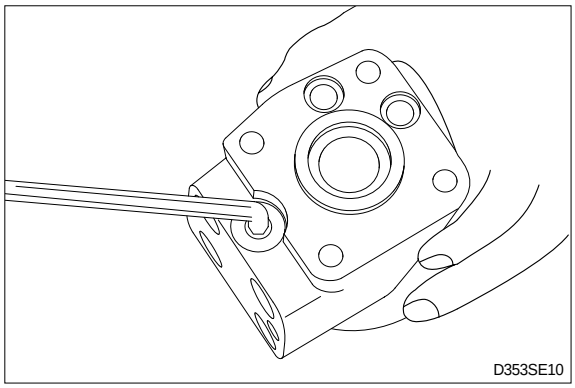

(15) Unscrew the setting screw using an 8mm hexagon socket spanner.

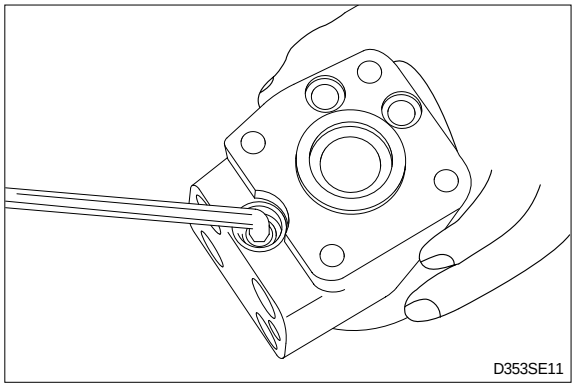

https://www.forkliftpdfmanuals.com/

(16) Shake out spring and piston. The valve seat is bonded into the housing and cannot be removed.

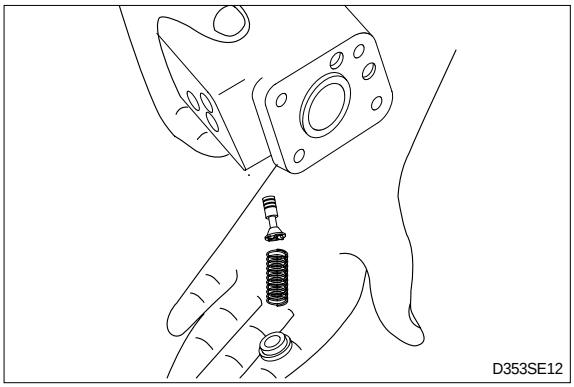

(17) The pressure relief valve is now disassembled.

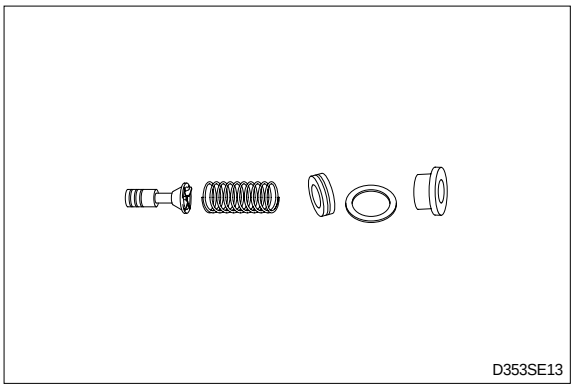

https://www.forkliftpdfmanuals.com/

5) ASSEMBLY

(1) Assemble spool and sleeve.

※ **When assembling spool and sleeve only one of two possible ways of positioning the spring slots is correct. There are three slots in the spool and three holes in the sleeve in the end of the spool / sleeve opposite to the end with spring slots. Place the slots and holes opposite each other so that parts of the holes in the sleeve are visible through the slots in the spool.**

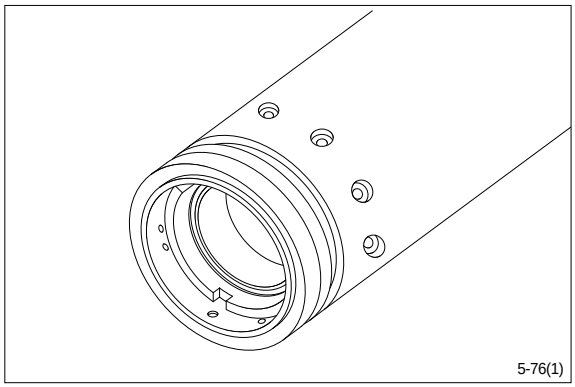
5-76(1)

(2) Place the two flat neutral position springs in the slot.
Place the curved springs between the flat ones and press them into place (see assembly pattern).

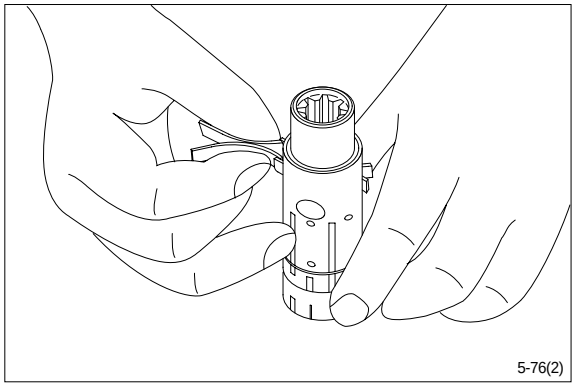
5-76(2)

(3) Line up the spring set.

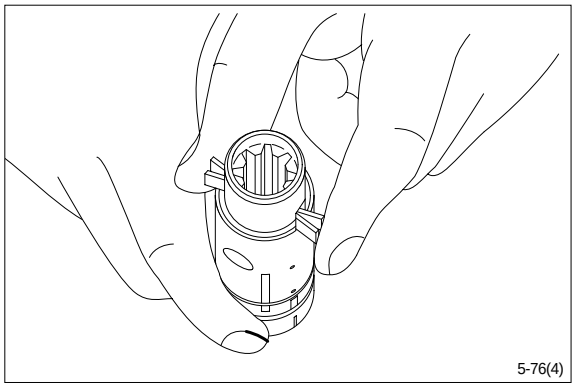
5-76(4)

(4) Guide the spool into the sleeve. Make sure that spool and sleeve are placed correctly in relation to each other.

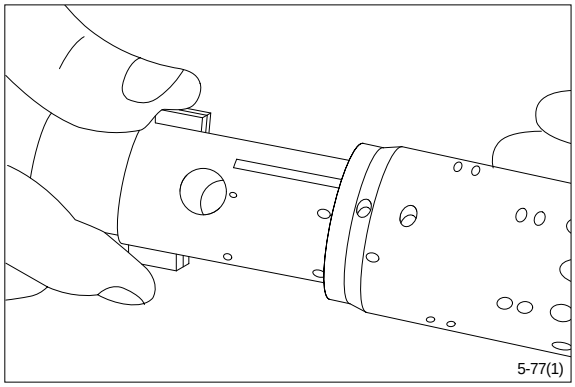
5-77(1)

https://www.forkliftpdfmanuals.com/

(5) Press the springs together and push the neutral position springs into place in the sleeve.

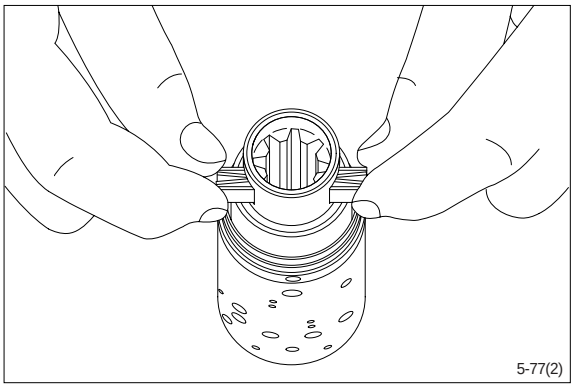
5-77(2)

(6) Line up the springs and center them.

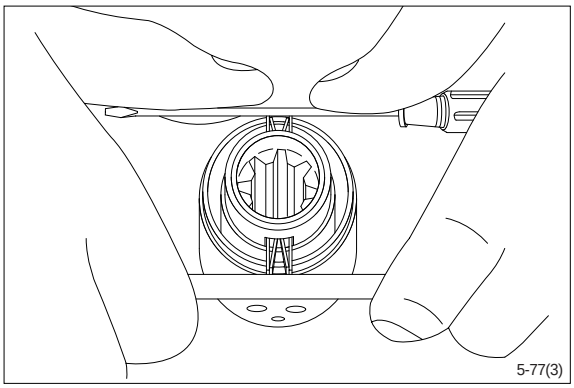
5-77(3)

(7) Guide the ring down over the sleeve.

※ **The ring should be able to rotate free of the springs.**

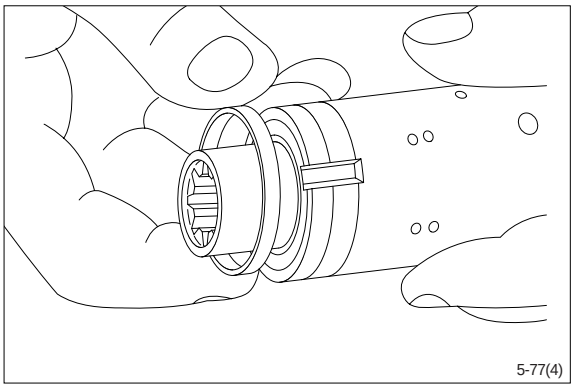
5-77(4)

(8) Fit the cross pin into the spool / sleeve.

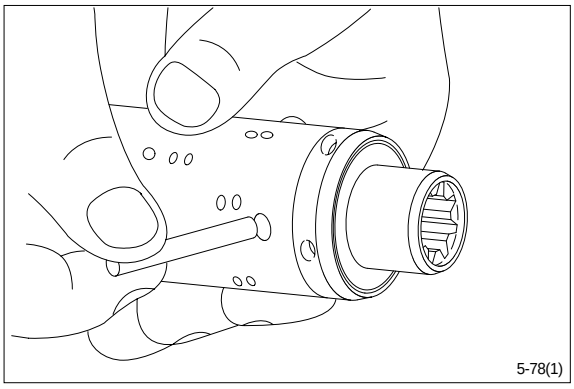
5-78(1)

https://www.forkliftpdfmanuals.com/

(9) Fit bearing races and needle bearing as shown on below drawing.

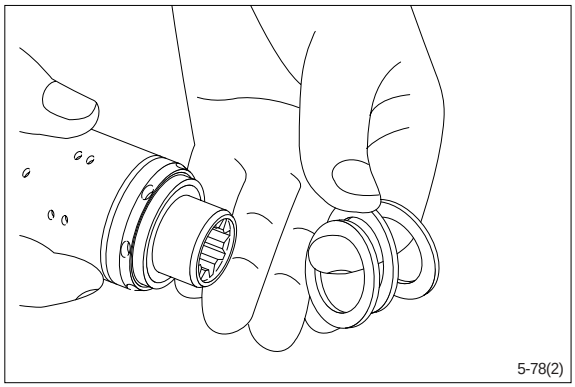

※ **Assembly pattern for standard bearings**

1 Outer bearing race
2 Thrust bearing
3 Inner bearing race
4 Spool
5 Sleeve

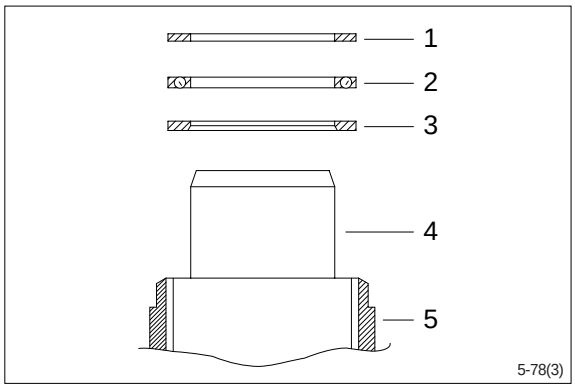

Installation instruction for O-ring

(10) Turn the steering unit until the bore is horizontal. Guide the outer part of the assembly tool into the bore for the spool / sleeve.

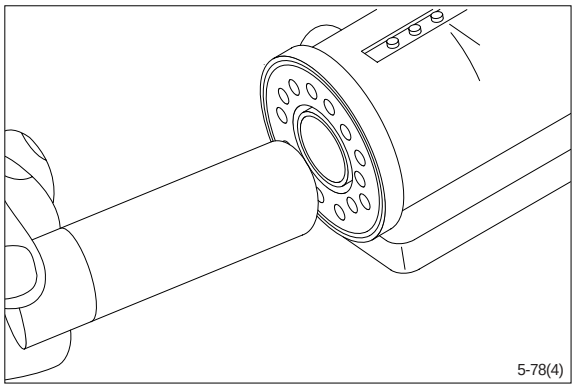

https://www.forkliftpdfmanuals.com/

(11) Grease O-ring with hydraulic oil and place them on the tool.

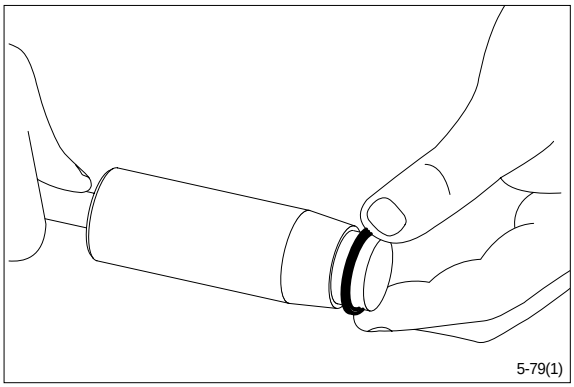
5-79(1)

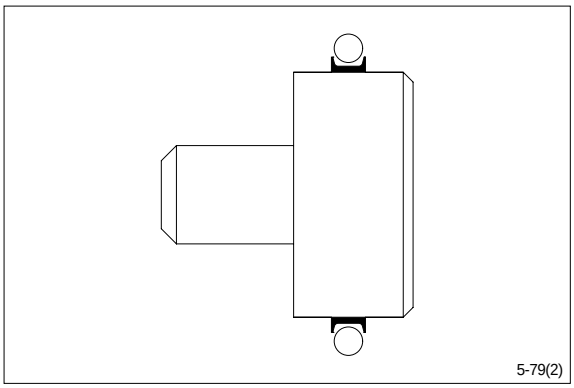
5-79(2)

(12) Hold the outer part of the assembly tool in the bottom of the steering unit housing and guide the inner part of the tool right to the bottom.

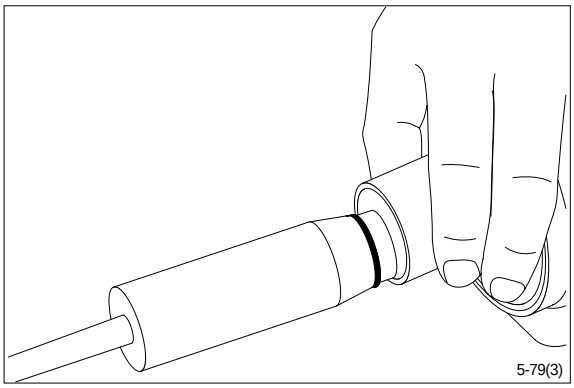
5-79(3)

(13) Press and turn the O-ring into position in the housing.

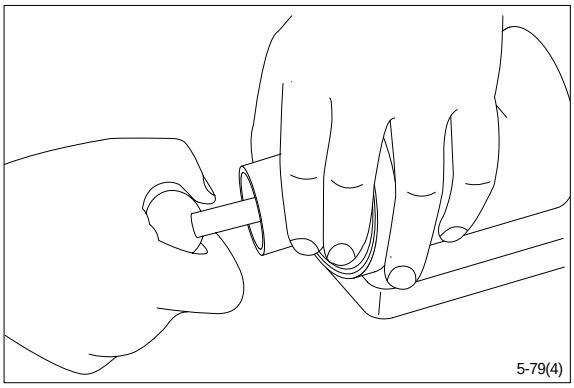
5-79(4)

https://www.forkliftpdfmanuals.com/

(14) Draw the inner and outer parts of the assembly tool out of the steering unit bore, leaving the guide from the inner part in the bore.

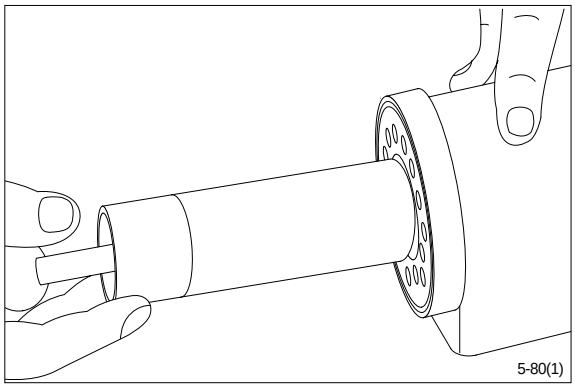

Installation instructions for lip seal

(15) Lubricate the lip seal with hydraulic oil and place it on the assembly tool.

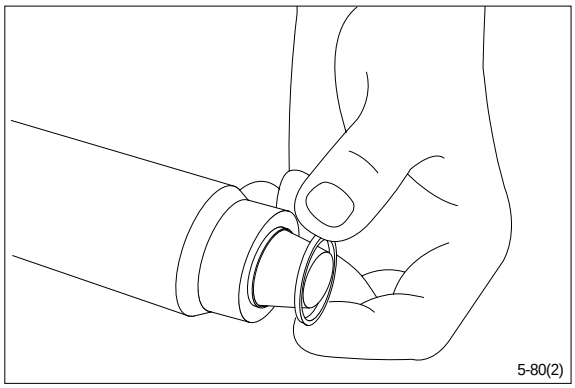

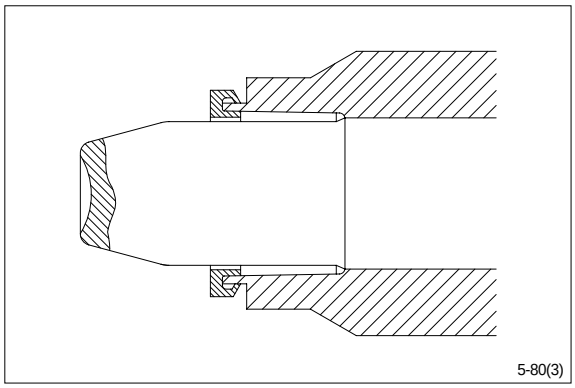

(16) Guide the assembly tool right to the bottom.

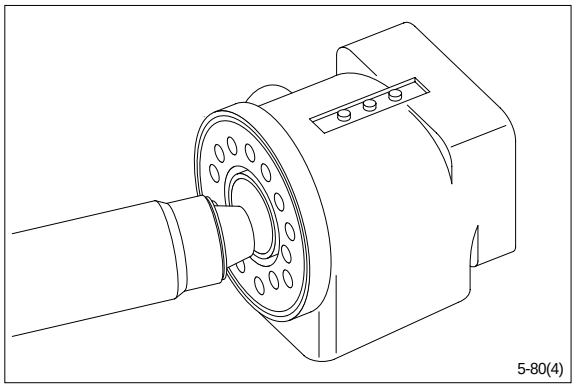

https://www.forkliftpdfmanuals.com/

(17) Press and turn the lip seal into place in the housing.

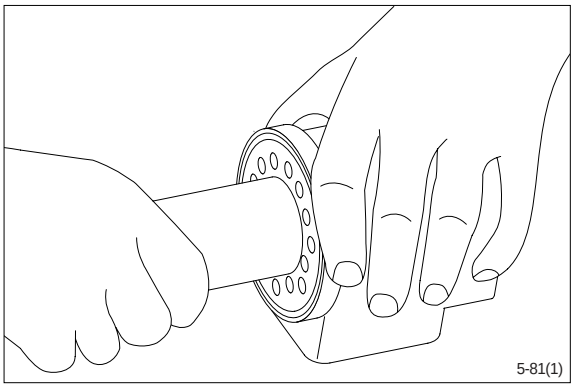
5-81(1)

(18) With a light turning movement, guide the spool and sleeve into the bore.

※ **Fit the spool set holding the cross pin horizontal.**

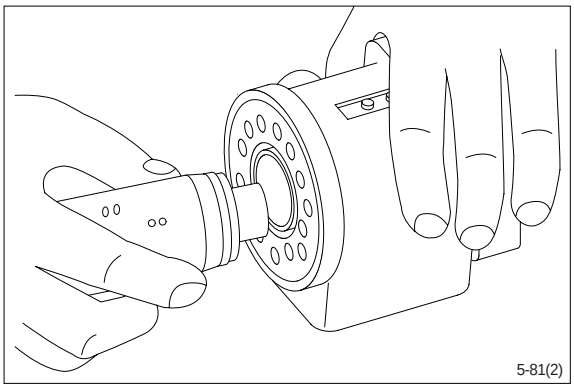
5-81(2)

(19) The spool set will push out the assembly tool guide. The O-ring are now in position.

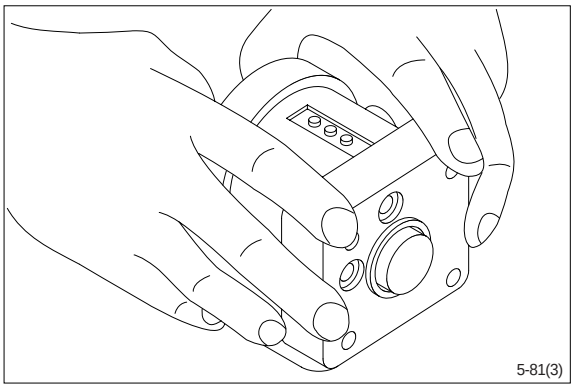
5-81(3)

(20) Turn the steering unit until the bore is vertical again. Put the check valve ball into the hole indicated by the arrow.

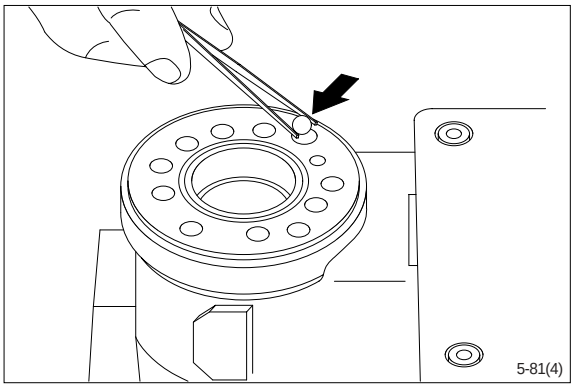
5-81(4)

https://www.forkliftpdfmanuals.com/

(21) Screw the threaded bush lightly into the check valve bore. The top of the bush must lie just below the surface of the housing.

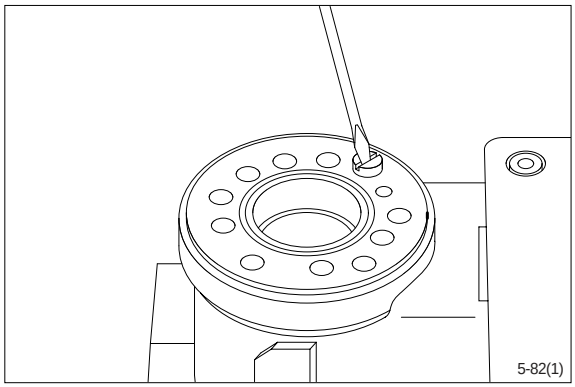

(22) Grease the O-ring with mineral oil approx. viscosity 500 cSt at 20℃.

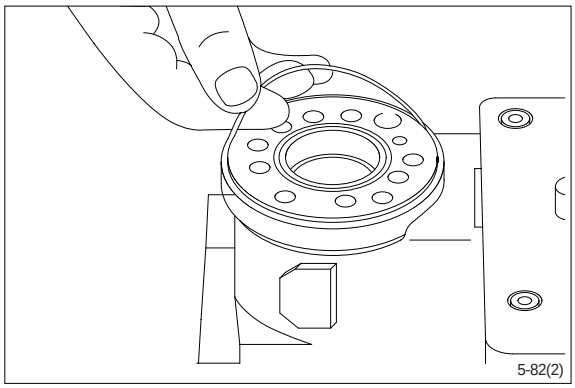

(23) Place the distributor plate so that the channel holes match the holes in the housing.

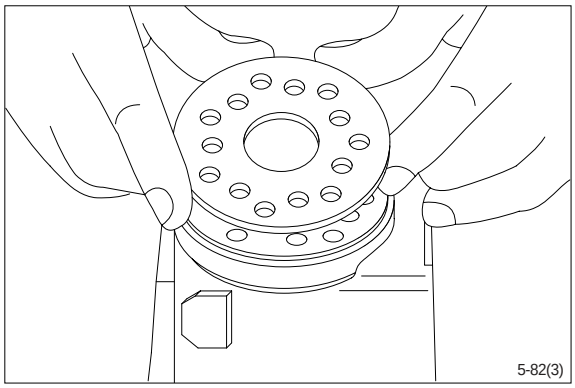

(24) Guide the cardan shaft down into the bore so that the slot is parallel with the connection flange.

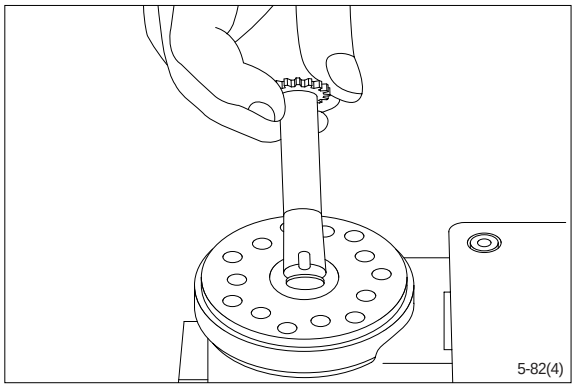

https://www.forkliftpdfmanuals.com/

(25) Place the cardan shaft as shown - so that it is held in position by the mounting fork.

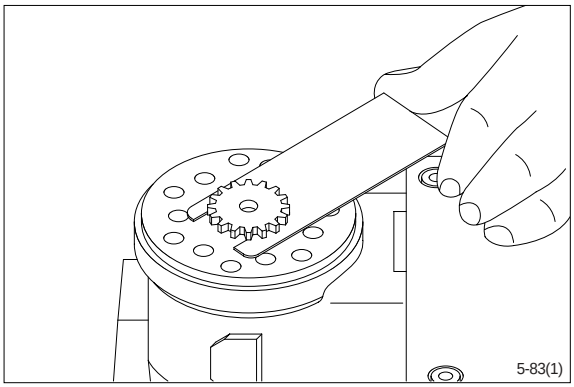

(26) Grease the two O-rings with mineral oil approx. viscosity 500 cSt at 20°C and place them in the two grooves in the gear rim. Fit the gearwheel and rim on the cardan shaft.

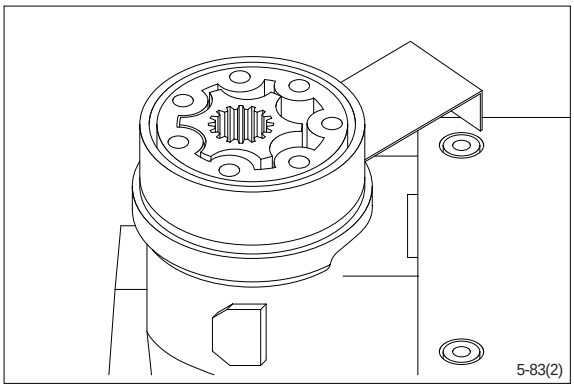

(27) Important

Fit the gearwheel(Rotor) and cardan shaft so that a tooth base in the rotor is positioned in relation to the shaft slot as shown.

Turn the gear rim so that the seven through holes match the holes in the housing.

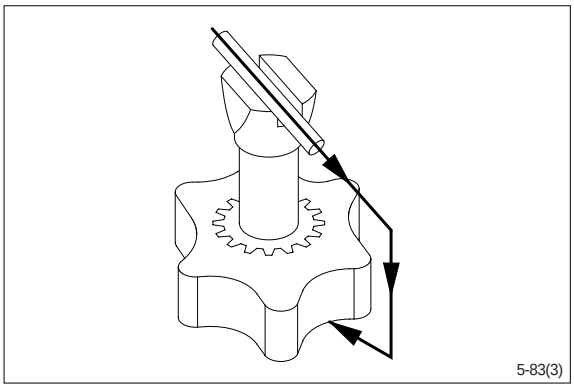

(28) Fit the spacer, if any.

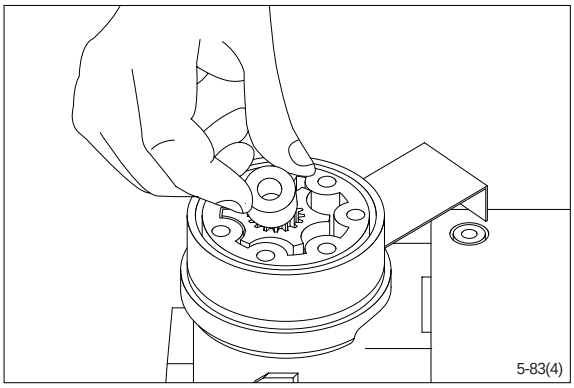

https://www.forkliftpdfmanuals.com/

(29) Place the end cover in position.

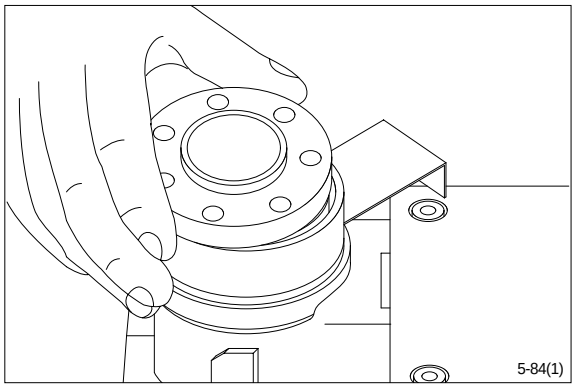
5-84(1)

(30) Fit the special screw with washer and place it in the hole shown.

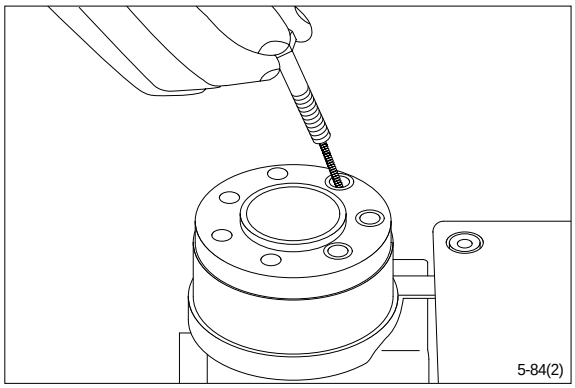
5-84(2)

(31) Fit the six screws with washers and insert them. Cross-tighten all the screws and the rolled pin.

・Tightening torque : 3.0 ± 0.6kgf・m
(21.7 ± 4.3lbf・ft)

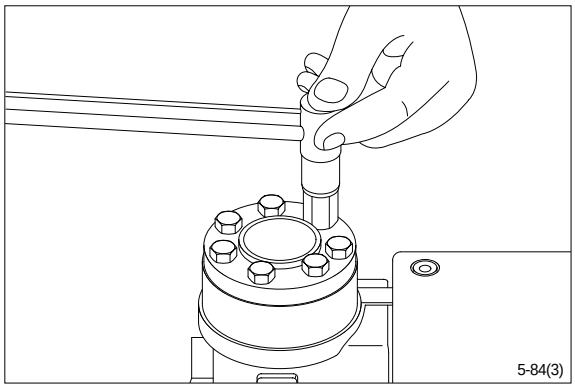
5-84(3)

(32) Place the dust seal ring in the housing.

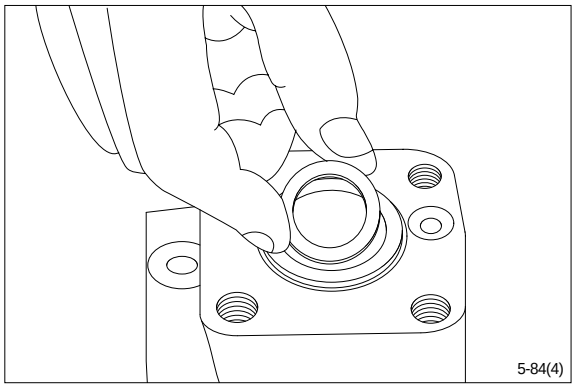
5-84(4)

https://www.forkliftpdfmanuals.com/

(33) Fit the dust seal ring in the housing.

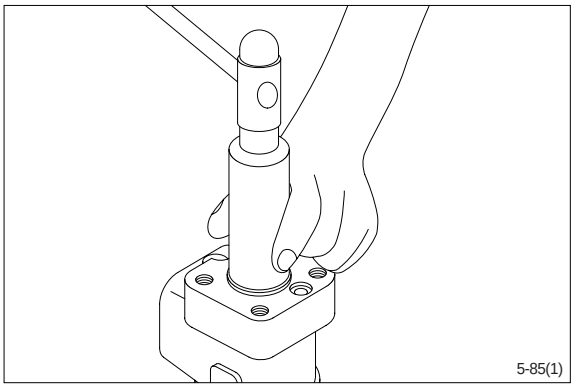
5-85(1)

(34) Press the plastic plugs into the connection ports.

※ **Do not use a hammer!**

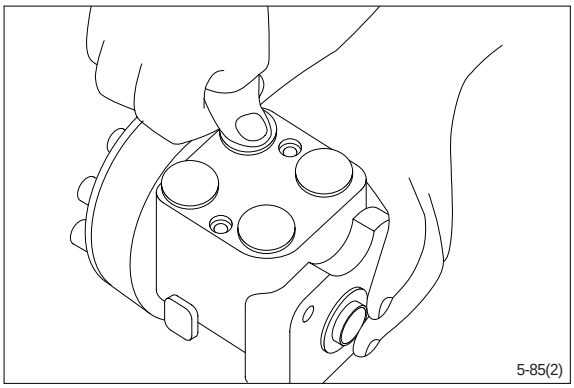
5-85(2)

https://www.forkliftpdfmanuals.com/

2. STEERING CYLINDER

1) STRUCTURE

(1) 20L/25L/30L-7

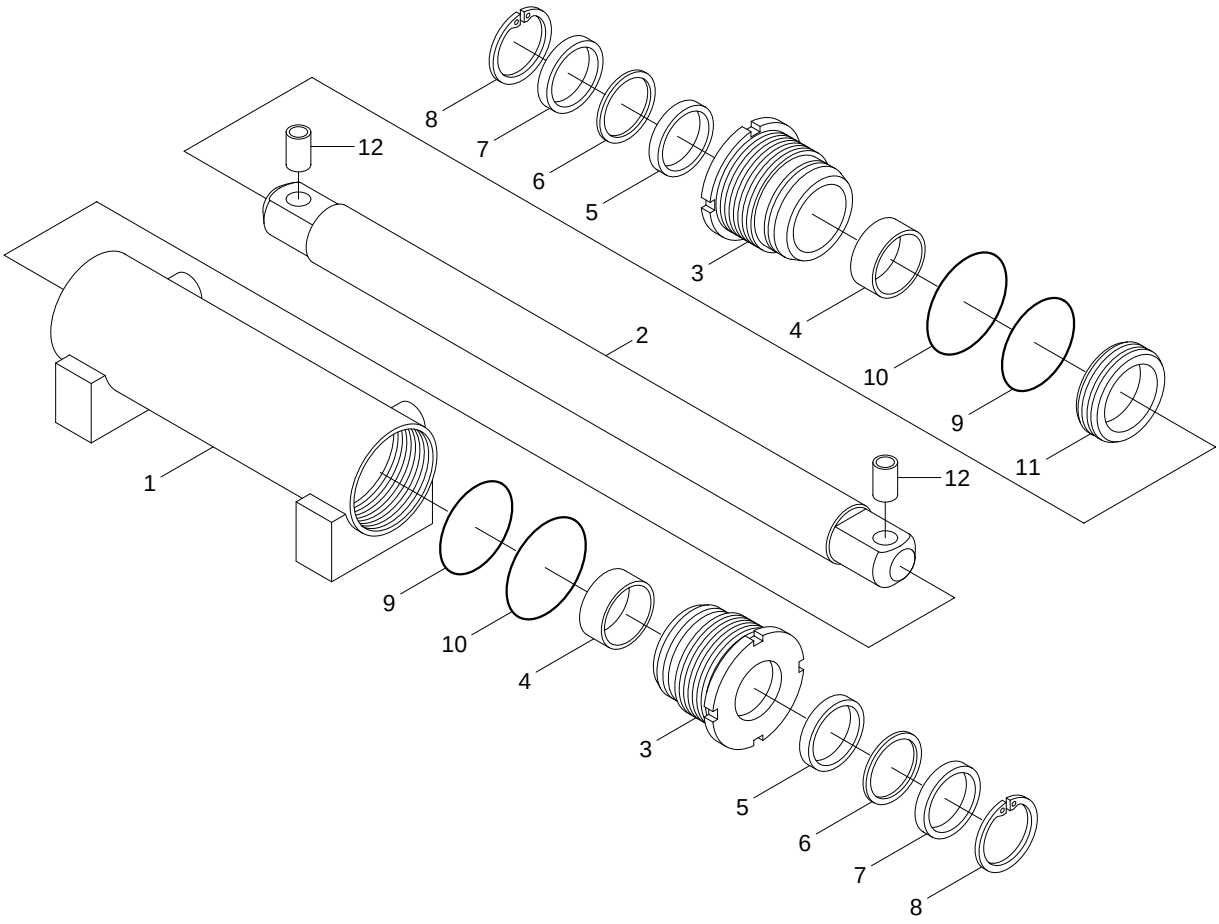

D255SS11

1	Tube assembly	5	Rod seal	9	O-ring
2	Rod	6	Back up ring	10	O-ring
3	Gland	7	Dust wiper	11	Piston seal
4	DU bushing	8	Snap ring	12	Pin bush

https://www.forkliftpdfmanuals.com/

(2) 20LC/25LC/30LC-7

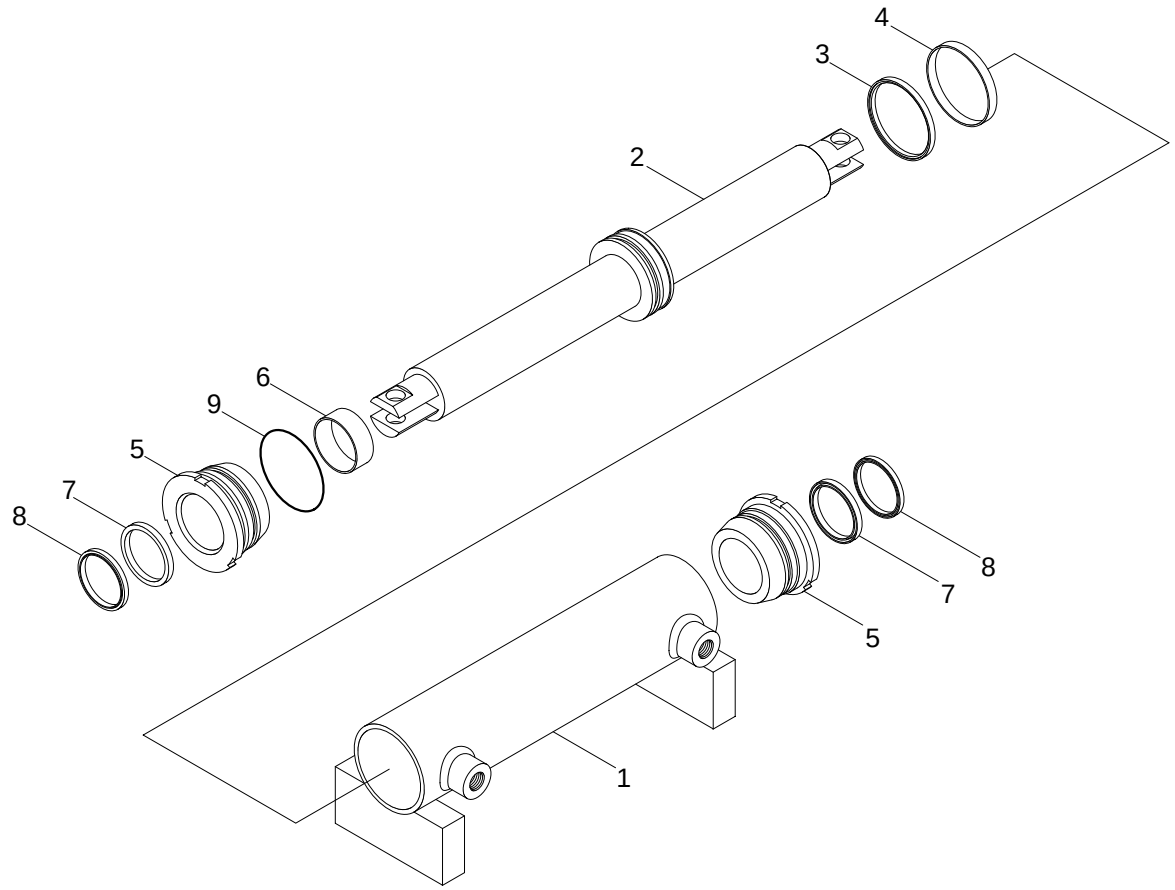

L255SS11

1	Tube assembly	6	Bushing
2	Rod assembly	7	U-packing
3	Piston seal	8	Dust wiper
4	Wear ring	9	O-ring
5	Gland		

https://www.forkliftpdfmanuals.com/

2) DISASSEMBLY

※ **Before disassembling steering cylinder, release oil in the cylinder first.**

(1) Put wooden blocks against the cylinder tube, then hold in a vice.

(2) Remove the gland by hook a wrench in the notch of cylinder head and turn counter-clockwise.

(3) Remove the cylinder rod and piston from the tube.

(4) Check wear condition of the sealing parts. If there are some damage, replace with new parts.

3) CHECK AND INSPECTION

mm(in)

Check item	Criteria		Remedy
	Standard size	Repair limit	
Clearance between piston & cylinder tube	0.064~0.137 (0.0025~0.0054)	0.180 (0.0070)	Replace piston seal
Clearance between cylinder rod & bushing	0.024~0.112 (0.0009~0.0044)	0.120 (0.0049)	Replace bushing
Seals, O-ring	Damage		Replace
Cylinder rod	Dents		Replace
Cylinder tube	Biting		Replace

4) ASSEMBLY

(1) Install a new piston seal the groove on the piston.

※ **Be careful not to scratch the seal too much during installation or it will not seat properly.**

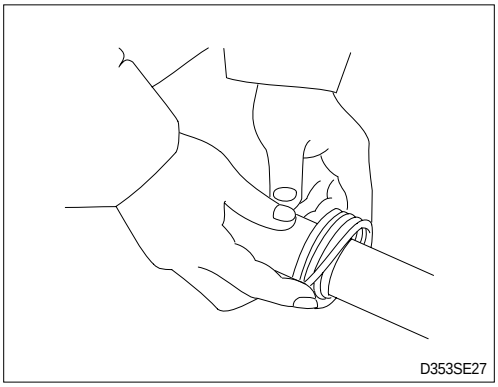

(2) Install the rod seal to the position in the gland applying a slight coat with grease prior to install.

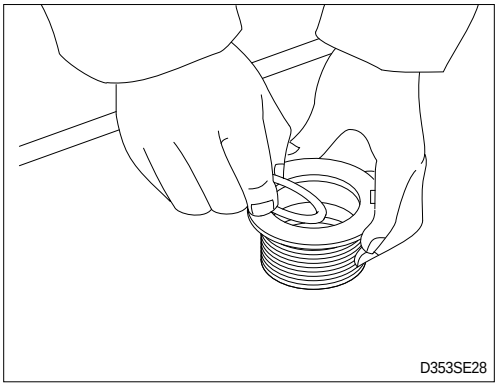

https://www.forkliftpdfmanuals.com/

(3) Install the dust wiper to the gland using a special installing tool. Coat the dust wiper with grease slightly before installing.

(4) Set a special tool the cylinder, gland assembly into the cylinder tube.

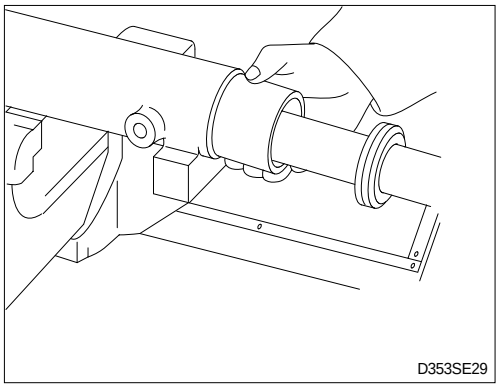
D353SE29

(5) Using a hook spanner, install the gland assembly, and tighten it with torque 45±4.5kgf · m (325±32.5lbf · ft).

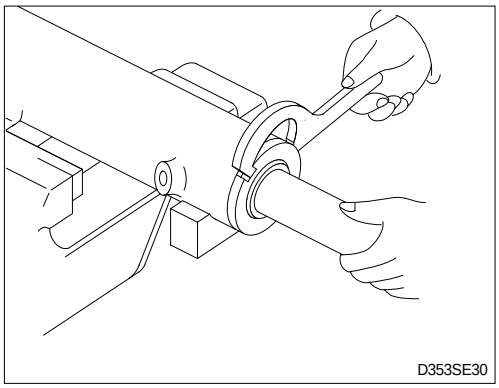
D353SE30

(6) After the gland assembly was installed to the cylinder tube, calk at the tube end into the groove on the gland to prevent screw loosening.

※ **If it need calking again, never using previous calking position.**

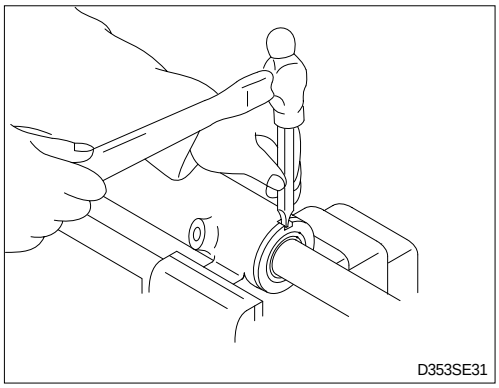
D353SE31

(7) Move the piston rod back and forth several times for the full distance of its stroke. This helps to seat the ring and seals before applying full hydraulic pressure to the cylinder.

(8) Install cylinder into steering axle.

(9) While idling the engine with the rear wheels off the ground, operate the steering wheel left and right alternately.

※ **Then, repeat the above operation at gradually increasing engine rpm. This releases air from the system and completes preparation for operation.**

(10) Stop the engine, lower the floating rear wheels, and check pump joints for oil leaks and looseness and retighten, them as required.

https://www.forkliftpdfmanuals.com/

3. STEERING AXLE

1) STRUCTURE

(1) 20L/25L/30L-7, 20G/25G/30G-7

※ Do not remove the stopper bolt unless necessary.

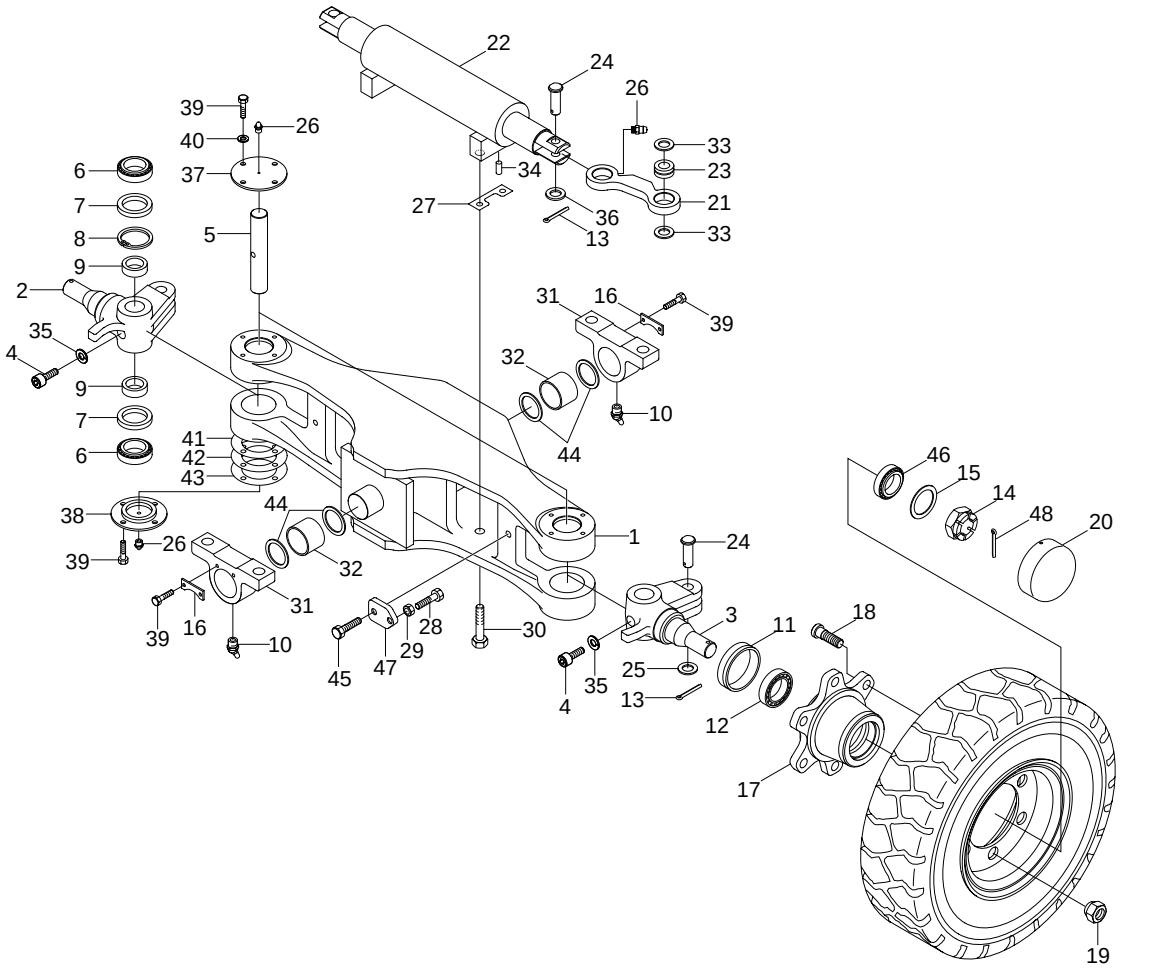

20D7SS07

1	Steering axle	17	Hub	33	Thrust washer
2	Knuckle-RH	18	Hub bolt	34	Pin
3	Knuckle-LH	19	Hub nut	35	Spring washer
4	Special bolt	20	Hub cap	36	Hardened washer
5	King pin	21	Steering link	37	Upper cover
6	Taper roller bearing	22	Steering cylinder	38	Lower cover
7	Oil seal	23	SPH plain bearing	39	Hex bolt
8	Retaining ring	24	Steer link pin	40	Spring wahser
9	Collar	25	Plain washer	41	Shim (0.1t)
10	Grease nipple	26	Grease nipple	42	Shim (0.15t)
11	Oil seal	27	Lock plate	43	Shim (0.3t)
12	Taper roller bearing	28	Bolt	44	Spacer
13	Split pin	29	Hex nut	45	Hex bolt
14	Nut	30	Hex bolt	46	Taper roller bearing
15	Washer	31	Trunnion block	47	Plate
16	Plate	32	Bushing	48	Split pin

https://www.forkliftpdfmanuals.com/

(2) 20LC/25LC/30LC-7, 20GC/25GC/30GC-7

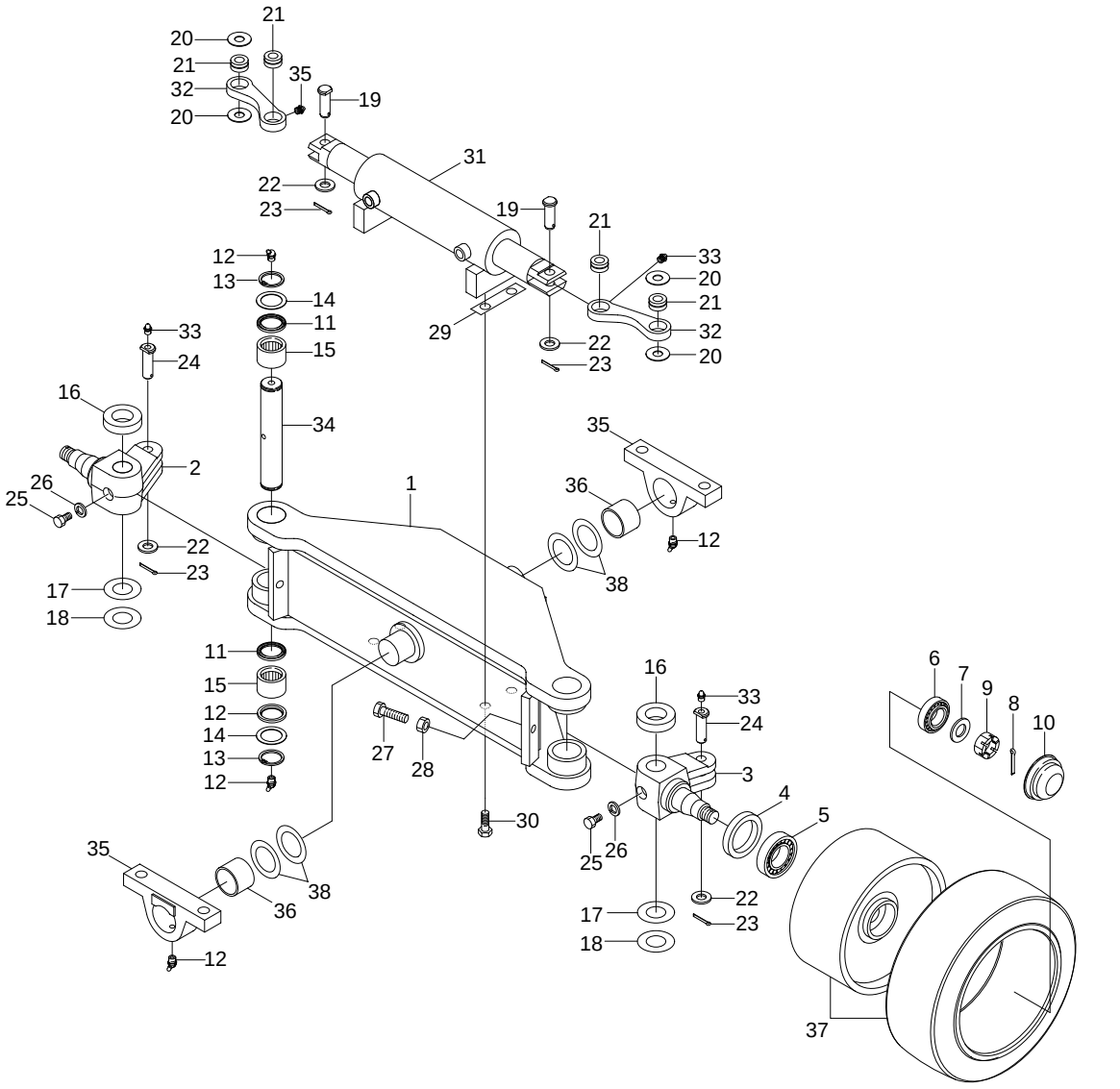

20L7SS06

1	Steering axle	14	King pin washer	27	Hex bolt
2	Knuckle-RH	15	Needle bearing	28	Hex nut
3	Knuckle-LH	16	Thrust bearing	29	Lock plate
4	Oil seal	17	Shim (0.13t)	30	Hex bolt
5	Taper roller bearing	18	Shim (0.25t)	31	Steering cylinder
6	Taper roller bearing	19	Clevis pin	32	Link
7	Plain washer	20	Thrust washer	33	Grease nipple
8	Split pin	21	Bearing	34	King pin
9	Castle nut	22	Plain washer	35	Block
10	Hub cap	23	Split pin	36	Bushing
11	Oil seal	24	Clevis pin	37	Rear tire & rim assy
12	Grease nipple	25	Special bolt	38	Shim (0.5t, 1.0t)
13	Retaining ring	26	Spring washer		

https://www.forkliftpdfmanuals.com/

2) CHECK AND INSPECTION

(1) 20L/25L/30L-7, 20G/25G/30G-7

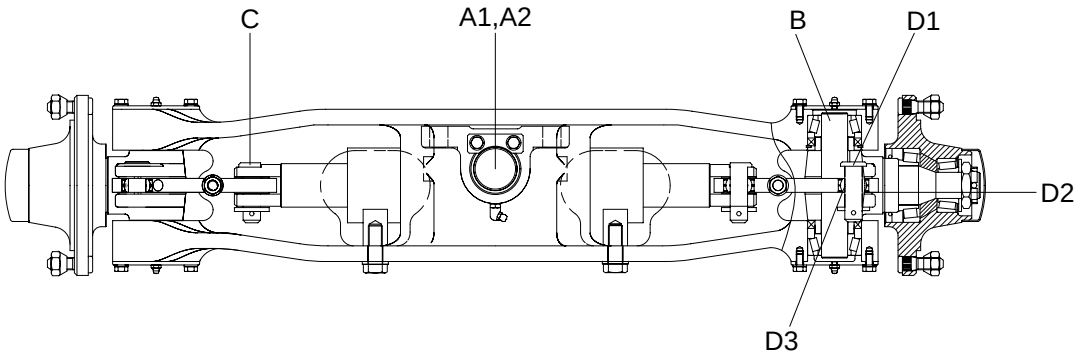

20D7SS10

unit : mm(in)

No.	Check item			Criteria		Remarks
				Standard size	Repair limit	
A	Shaft	A1	OD of shaft	55(2.2)	54.5(2.1)	Replace
		A2	ID of bushing	55(2.2)	55.5(2.2)	
B	OD of king pin			35(1.4)	34.5(1.4)	
C	OD of steering cylinder pin			20(0.8)	19.5(0.8)	
D	Knuckle	D1	OD of pin	20(0.8)	19.5(0.8)	
		D2	Vertical play	-	-	Adjust with shims
		D3	ID of bushing	20(0.8)	20.5(0.8)	Replace

- OD : Outer diameter
- ID : Inner diameter

https://www.forkliftpdfmanuals.com/

(2) 20LC/25LC/30LC-7, 20GC/25GC/30GC-7

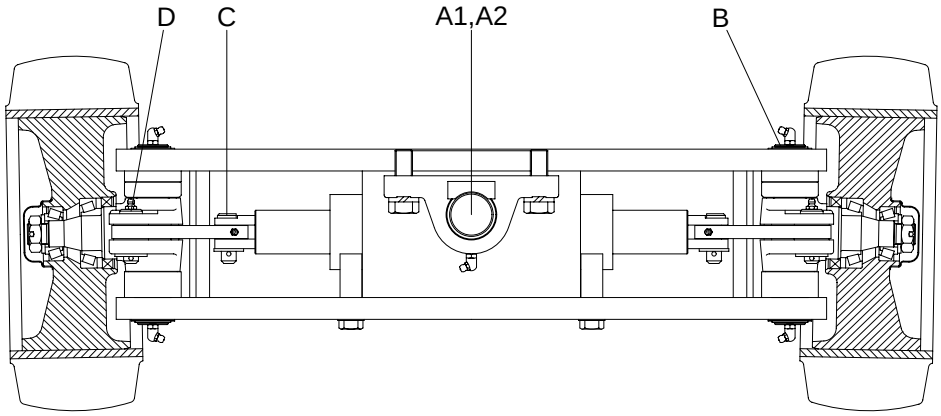

20L7SS10

unit : mm(in)

No.	Check item			Criteria		Remarks
				Standard size	Repair limit	
A	Shaft	A1	OD of shaft	50(2.0)	49.5(1.9)	Replace
		A2	ID of bushing	50(2.0)	50.5(2.0)	
B	OD of king pin			35(1.4)	34.5(1.4)	
C	OD of steering cylinder pin			17(0.7)	16.5(0.6)	
D	Knuckle	D1	OD of pin	17(0.7)	16.5(0.6)	
		D2	Vertical play	-	0.2(0.008)	Adjust with shims
		D3	ID of bushing	17(0.7)	17.5(0.7)	Replace

· OD : Outer diameter
· ID : Inner diameter

https://www.forkliftpdfmanuals.com/

3) DISASSEMBLY

※ Servicing work on the knuckle part can be carried out without removing the axle assy from chassis. The work can be done by jacking up the counter weight part of the truck.

(1) 20L/25L/30L-7, 20G/25G/30G-7

① Loosen the hub nut and take off the steering wheel tire.

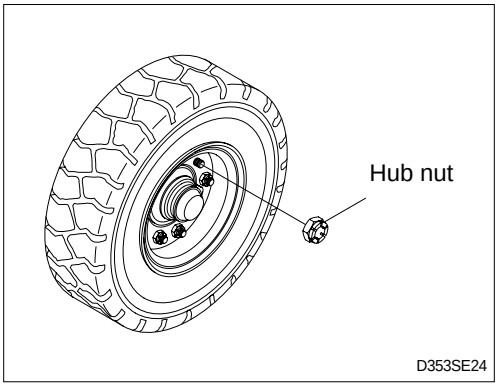

② Remove Hub cap.

③ Pull out split pin and remove slotted nut.

④ Using the puller, take off the hub together with the roller bearing.

※ Be very careful because just before the hub comes off, tapered roller bearing will fall out.

⑤ After hub is removed take off the inner race of roller bearing.

⑥ Pull out oil seal.

※ Don't use same oil seal twice.

⑦ Repeat the same procedure for the other side. Moreover, when disassembling is completed, part the slotted nut in the knuckle to protect the threaded portion.

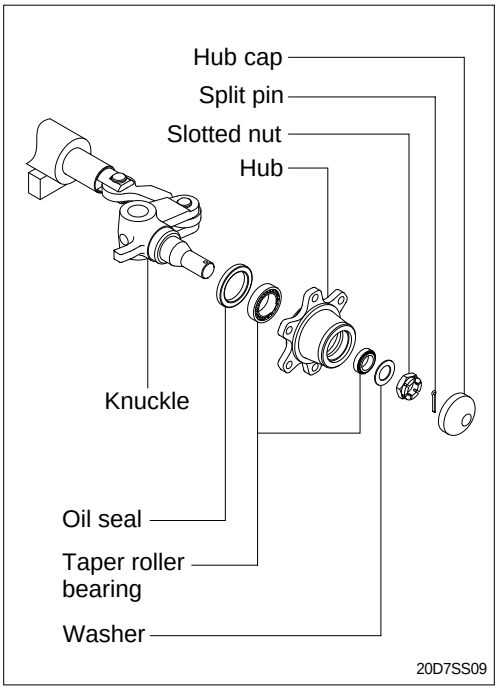

https://www.forkliftpdfmanuals.com/

⑧ Loosen special bolt (4) and spring washer (35).

⑨ Remove hexagon bolt (39) and upper cover (37).

⑩ Push out the king pin (5) without damaging the knuckle arm (3).

⑪ If defect is observed in bearing (6), pull it out by using extractor.

⑫ Remove spilt pin (13), plain washer(25) and link pin(24).

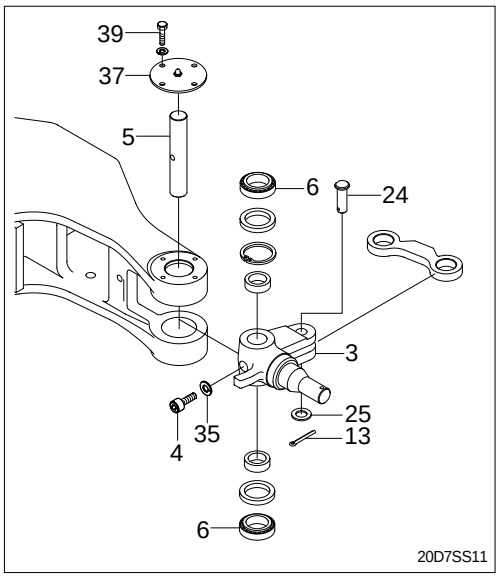

(2) 20LC/25LC/30LC-7, 20GC/25GC/30GC-7

① Remove hub cap.

② Pull out split pin and remove castle nut and plain washer.

③ Take off the steering wheel tire.

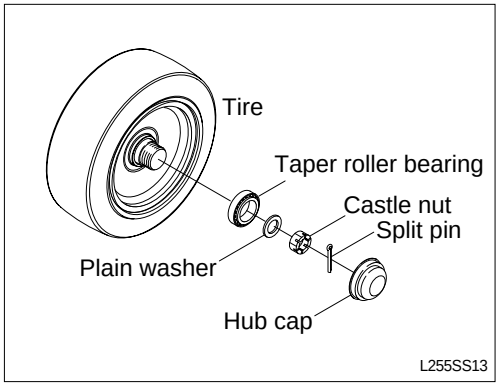

④ Using the puller, take off the hub together with the bearing.

※ Be very careful because just before the hub comes off, tapered roller bearing will fall out.

⑤ After wheel hub is removed take off the inner race of bearing.

⑥ Pull out oil seal.

※ Don't use same oil seal twice.

⑦ Repeat the same procedure for the other side. Moreover, when disassembling is completed, part the castle nut in the knuckle to protect the threaded portion.

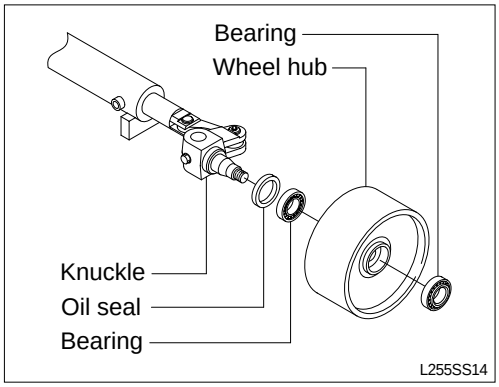

https://www.forkliftpdfmanuals.com/

⑧ Loosen special bolt(27) and spring washer(28).

⑨ Pry out the retaining ring(15) and remove oil seal(13).

⑩ Push out the king pin(36) without damaging the knuckle(2).

⑪ Pull out the needle bearing(17).
If defect is observed in needle bearing(17), pull it out by using extractor.

⑫ Remove the split pin(25) and the clevis pin(26). Then, remove the knuckle(2).

※ Repeat the same procedure for the other side.

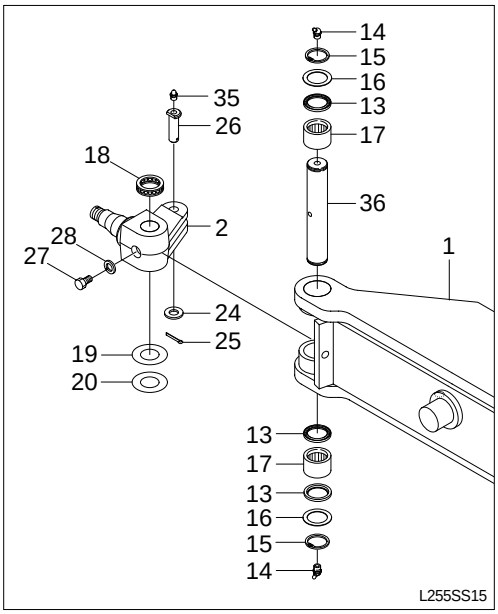

https://www.forkliftpdfmanuals.com/

4) ASSEMBLY

※ In reassembling, have all parts washed, grease applied to lubricating parts, and all expendable items such as oil seal and spring washers replaced by new ones.
Perform the disassembly in reverse order.

(1) 20L/25L/30L-7, 20G/25G/30G-7

① Tighten the special bolt (4) and washer (35) of king pin (5).

② There is a notch in the middle of the king pin (5), make sure that this notch is on the special bolt side.

③ Do not hammer to drive in bearing (6) because it will break.
Always use drive-in tool.
Be sure that the fixed ring of the bearing is placed in position facing the knuckle (3).

④ Hub

- Mount oil seal(11) and inner race of tapered roller bearing(12) on the knuckle. The bearing should be well greased before assembling.
- Install the outer race of the bearing(46) in the wheel center and assemble to the knuckle.
- Tighten nut(14) and lock with split pin(48). In locking with split pin, locate the hole for the split pin by turning the nut back 1/6 of a turn. Adjust the preload of bearing.
- Mount the hub cap(20).
Bearing should be well greased before assembling.

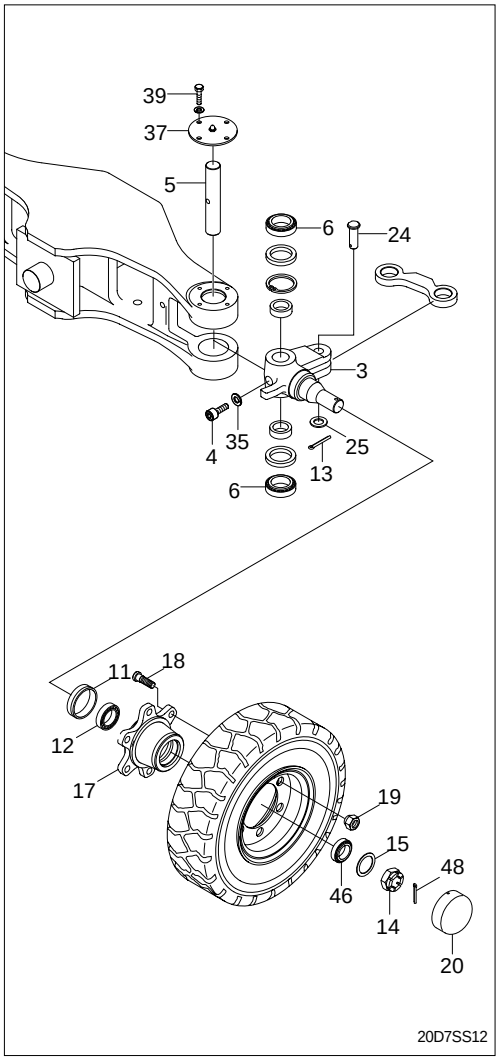

https://www.forkliftpdfmanuals.com/

(2) 20LC/25LC/30LC-7, 20GC/25GC/30GC-7

① Tighten the special bolt(27) of king pin.

※ **There is a notch in the middle of the king pin(36), make sure that this notch is on the special bolt side.**

② Do not hammer to drive in needle bearing(17) because it will break.
Always use drive-in tool. Be sure that the fixed ring of the bearing is placed in position facing the knuckle.

③ Wheel hub

- Mount oil seal(6) and inner race of tapered roller bearing(7) on the knuckle(2). The bearing should be well greased before assembling.
- Install the outer race of the bearing(8) in the wheel center and assemble to the knuckle.
- Tighten with castle nut(11) and locked with split pin (10). In locking with split pin, locate the hole for the split pin by turning the nut back 1/6 of a turn. Adjust the preload of bearing.
- Mount the hub cap(12). Bearing should be well greased before assembling.

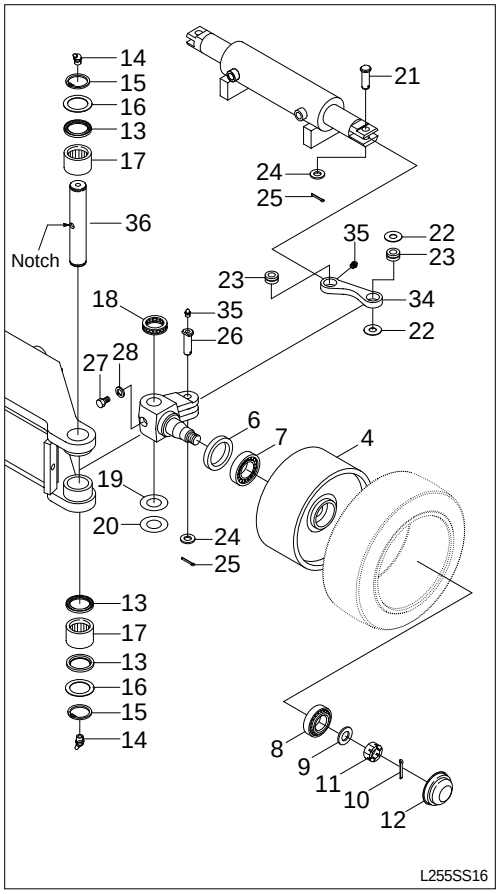

https://www.forkliftpdfmanuals.com/

SECTION 6 HYDRAULIC SYSTEM

Group 1 Structure and Function ····· 6-1
Group 2 Operational Checks and Troubleshooting ····· 6-19
Group 3 Disassembly and Assembly ····· 6-23

https://www.forkliftpdfmanuals.com/

GROUP 1 STRUCTURE AND FUNCTION

1. HYDRAULIC CIRCUIT (Non OPSS and non boosted brake)

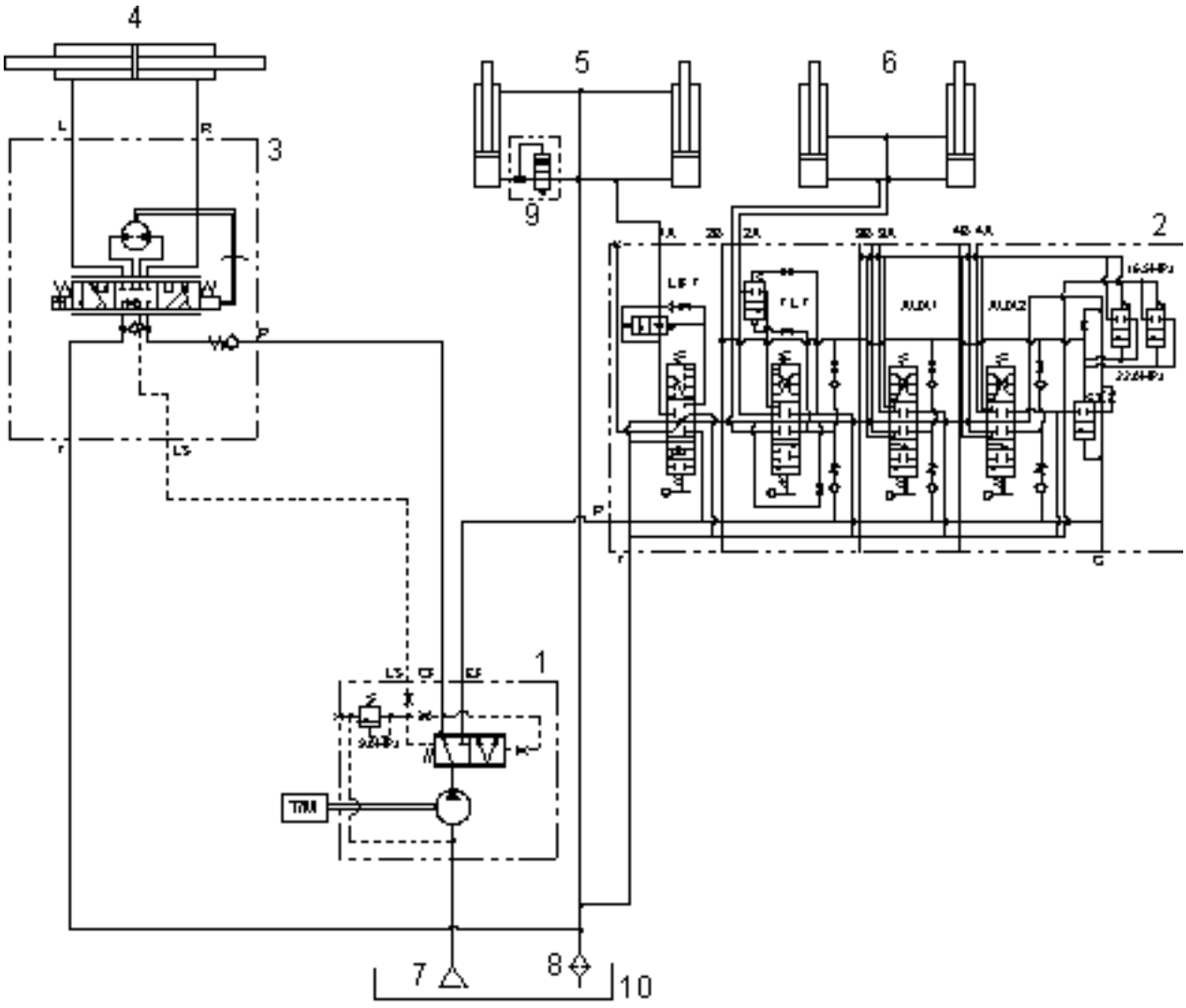

20L7HS01

1	Gear pump with priority valve	6	Tilt cylinder
2	Main control valve	7	Suction strainer
3	Steering unit	8	Return filter
4	Steering cylinder	9	Down safety valve
5	Lift cylinder	10	Hydraulic tank

https://www.forkliftpdfmanuals.com/

GROUP 1 STRUCTURE AND FUNCTION

1. HYDRAULIC CIRCUIT (Non OPSS and non boosted brake)

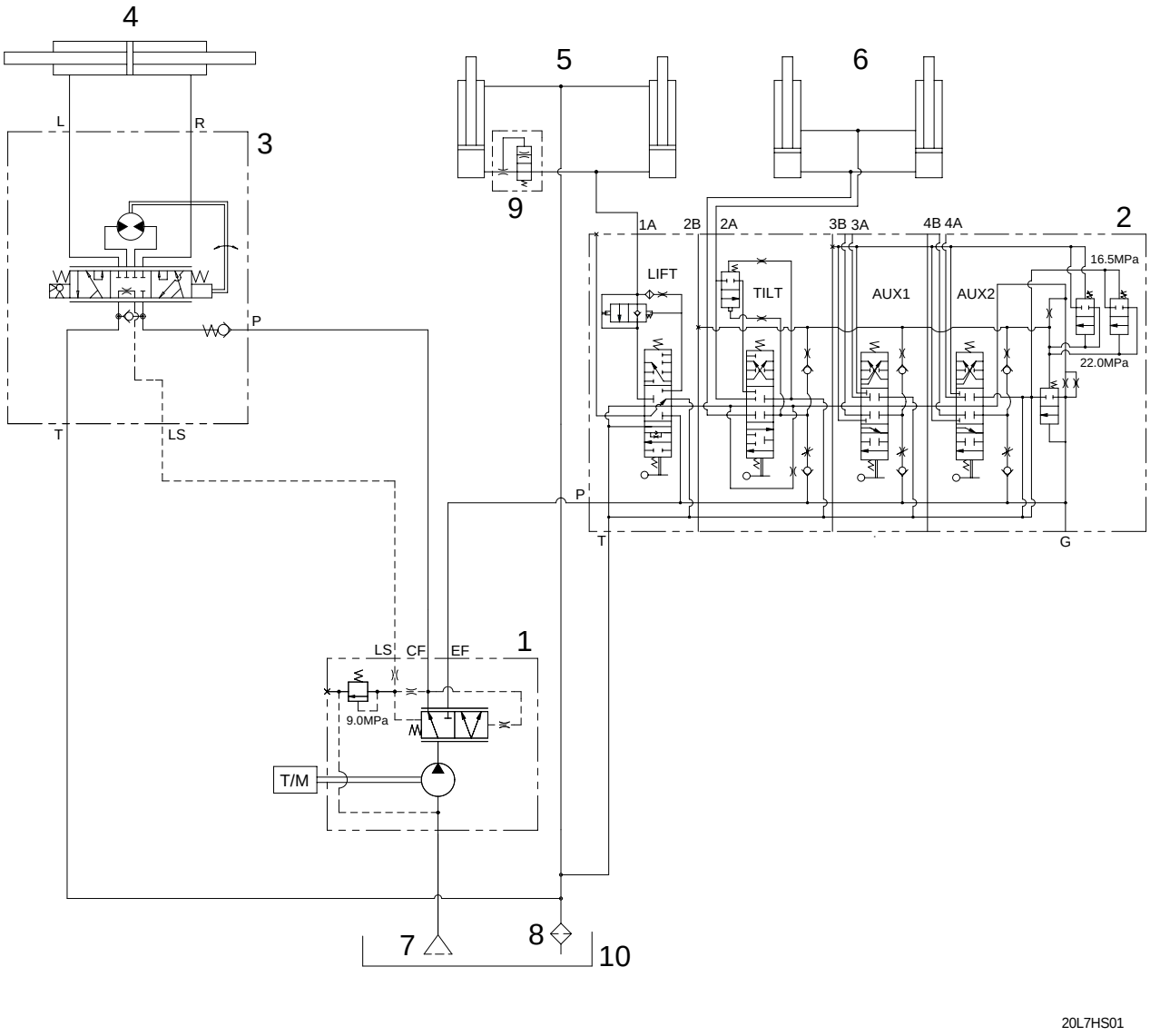

1	Gear pump with priority valve	6	Tilt cylinder
2	Main control valve	7	Suction strainer
3	Steering unit	8	Return filter
4	Steering cylinder	9	Down safety valve
5	Lift cylinder	10	Hydraulic tank

https://www.forkliftpdfmanuals.com/

HYDRAULIC CIRCUIT (OPSS and boosted brake)

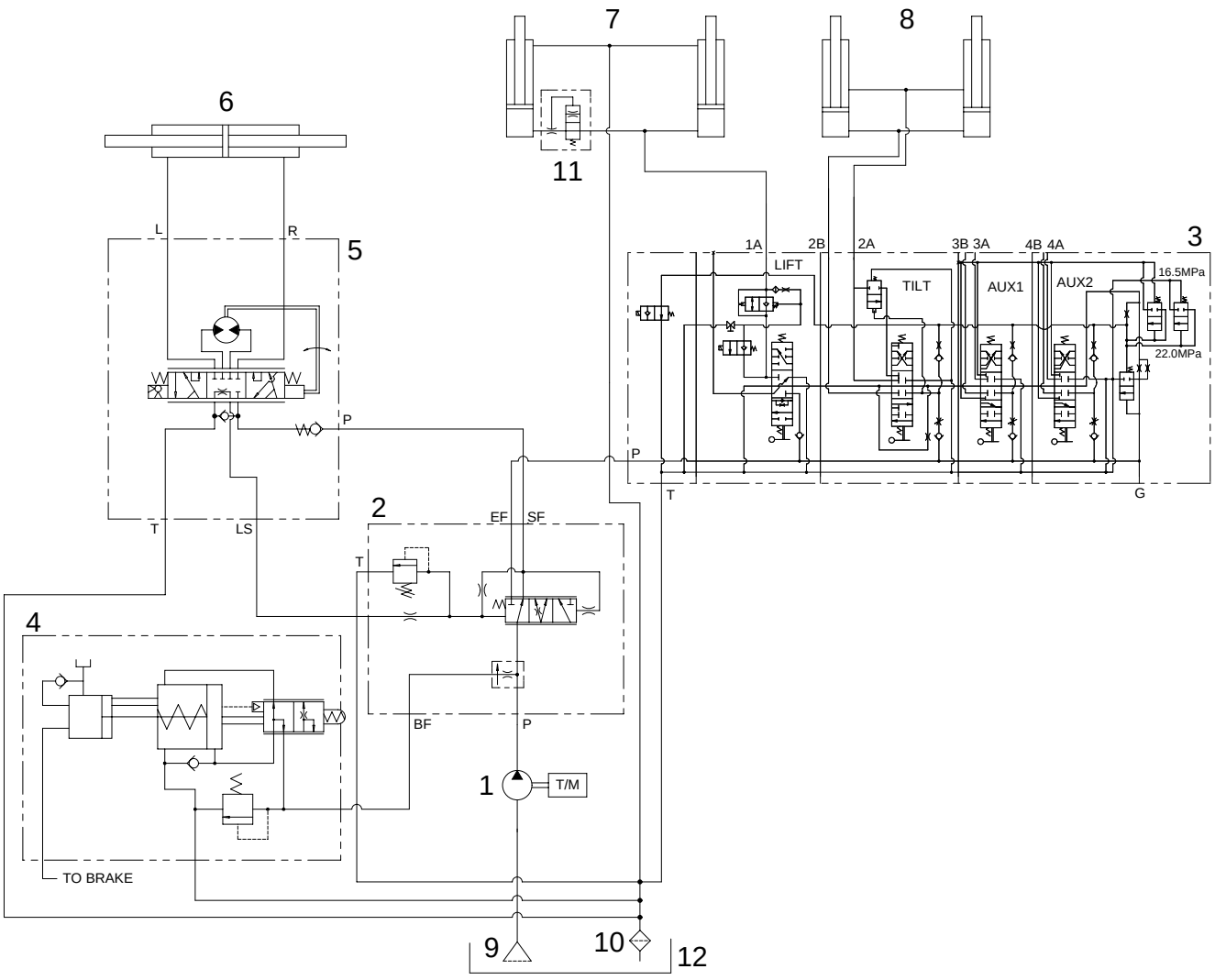

1	Hydraulic gear pump	7	Lift cylinder
2	Dual flow divider	8	Tilt cylinder
3	Main control valve	9	Suction strainer
4	Brake valve	10	Return filter
5	Steering unit	11	Down safety valve
6	Steering cylinder	12	Hydraulic tank

https://www.forkliftpdfmanuals.com/

1) WHEN THE LIFT CONTROL LEVER IS IN THE LIFT POSITION

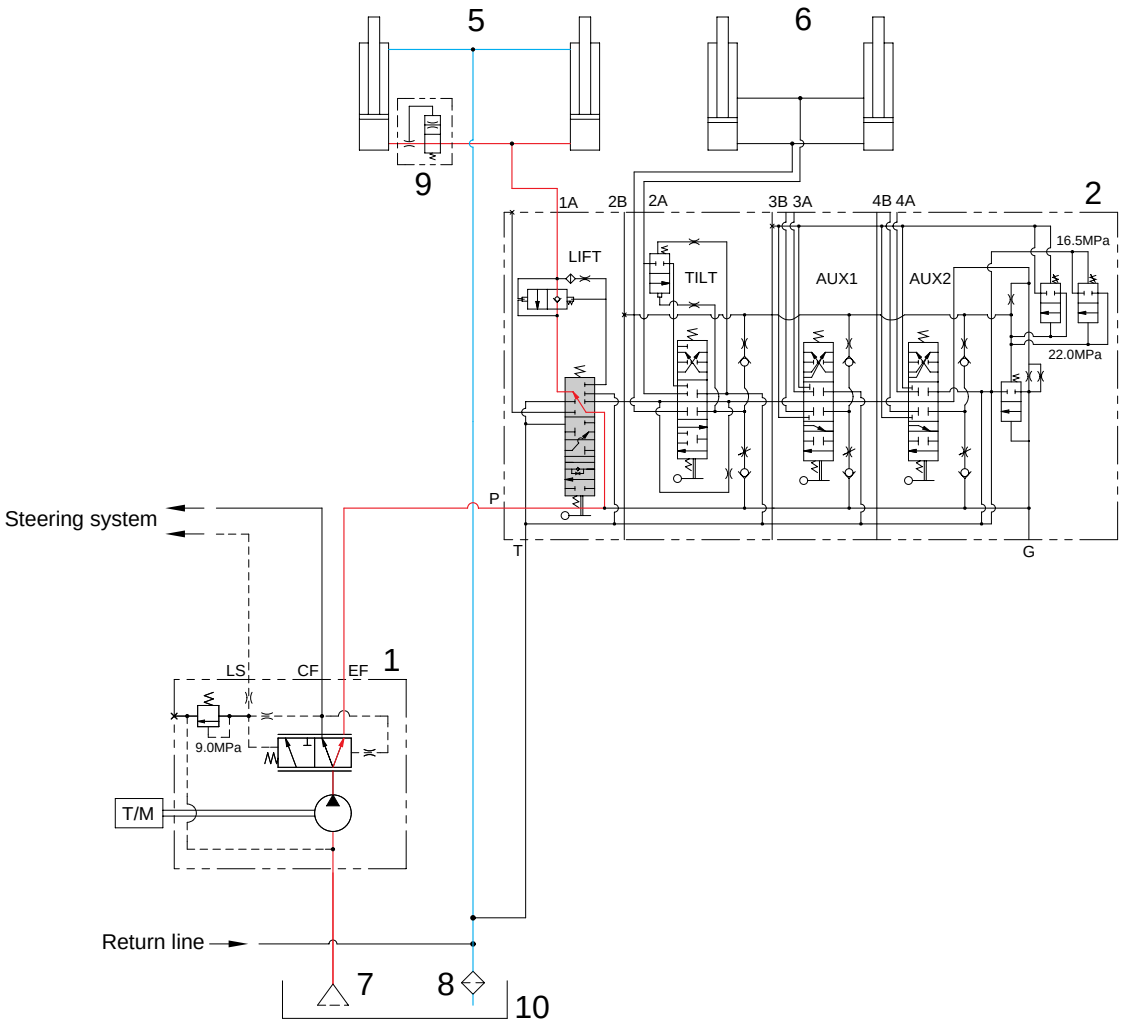

20L7HS03

When the lift control lever is pulled back, the spool on the first block moves to lift position.
The oil from hydraulic gear pump(1) flows into main control valve(2) and then goes to the large chamber of lift cylinder(5) by pushing the load check valve of the spool.
The oil from the small chamber of lift cylinder(5) returns to hydraulic oil tank(10) at the same time.
When this happens, the fork goes up.

https://www.forkliftpdfmanuals.com/

2) WHEN THE LIFT CONTROL LEVER IS IN THE LOWER POSITION

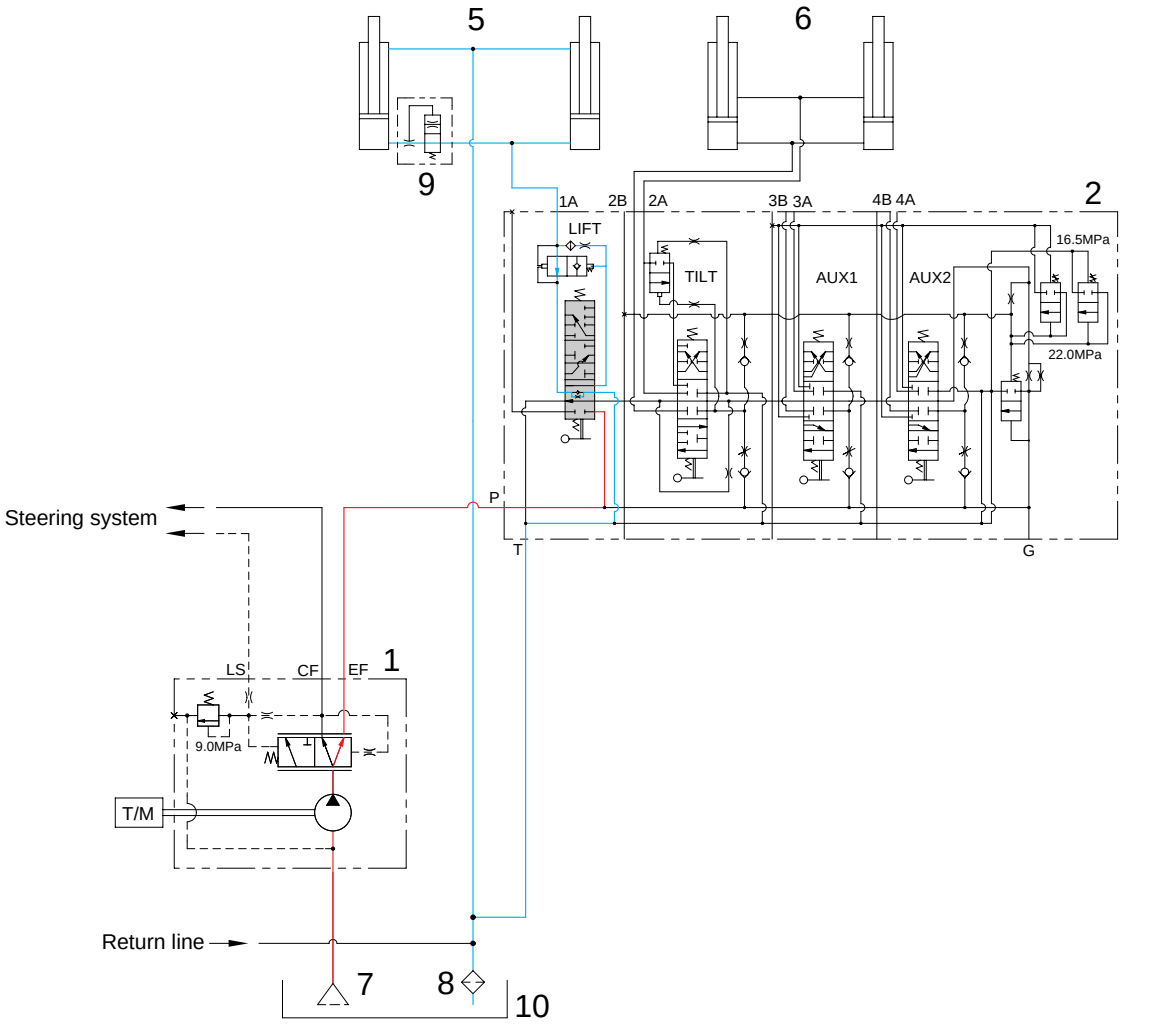

20L7HS04

When the lift control lever is pushed forward, the spool on the first block moves to lower position. The work port(1A) and the small and the large chamber of lift cylinder are connected to the return passage, so the fork will be lowered due to its own weight.

https://www.forkliftpdfmanuals.com/

3) WHEN THE TILT CONTROL LEVER IS IN THE FORWARD POSITION

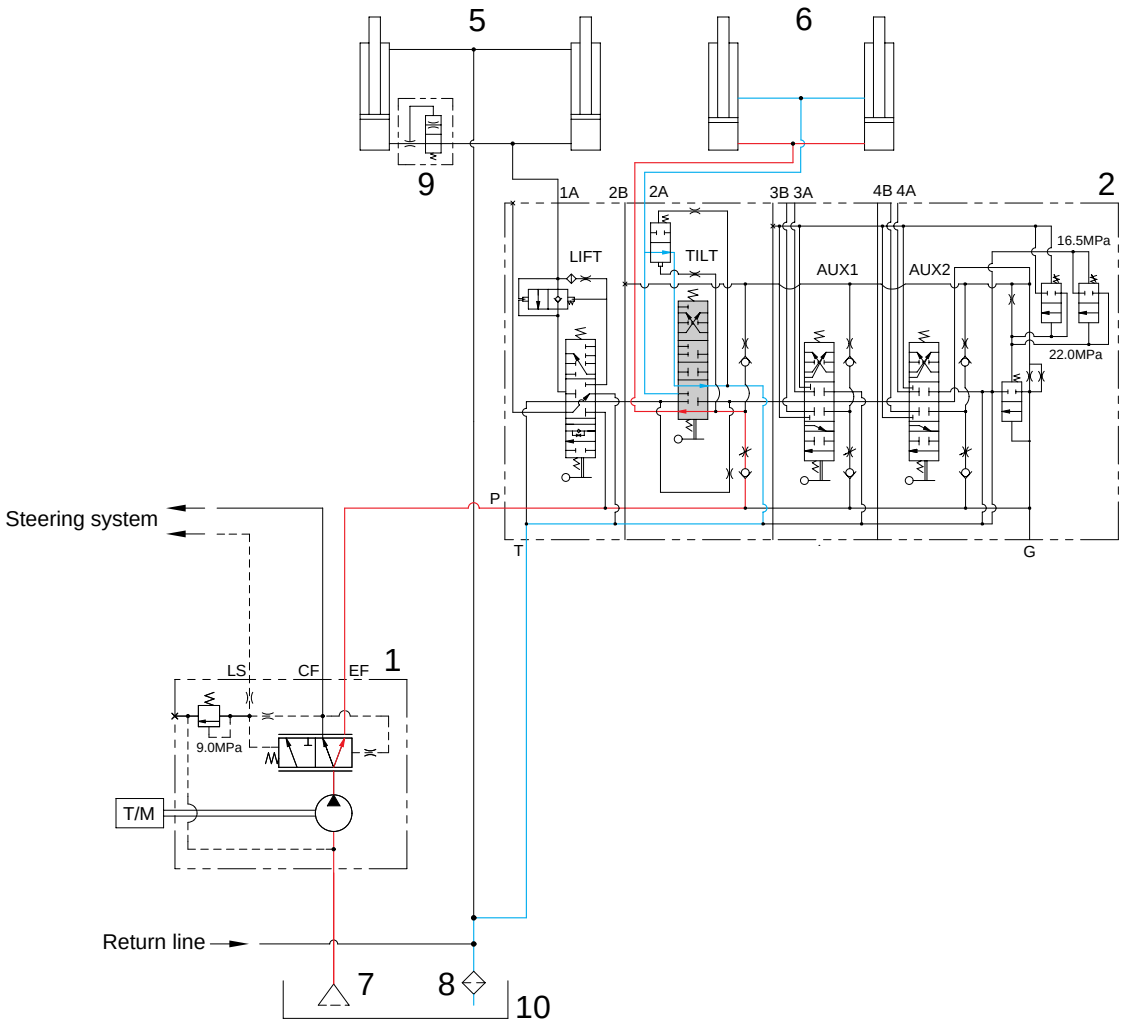

20L7HS05

When the tilt control lever is pushed forward, the spool on the second block is moved to tilt forward position.

The oil from hydraulic gear pump(1) flows into main control valve(2) and then goes to the large chamber of tilt cylinder(6) by pushing the load check valve of the spool.

The oil at the small chamber of tilt cylinder(6) returns to hydraulic tank(10) at the same time.

When this happens, the mast tilt forward.

https://www.forkliftpdfmanuals.com/

4) WHEN THE TILT CONTROL LEVER IS IN THE BACKWARD POSITION

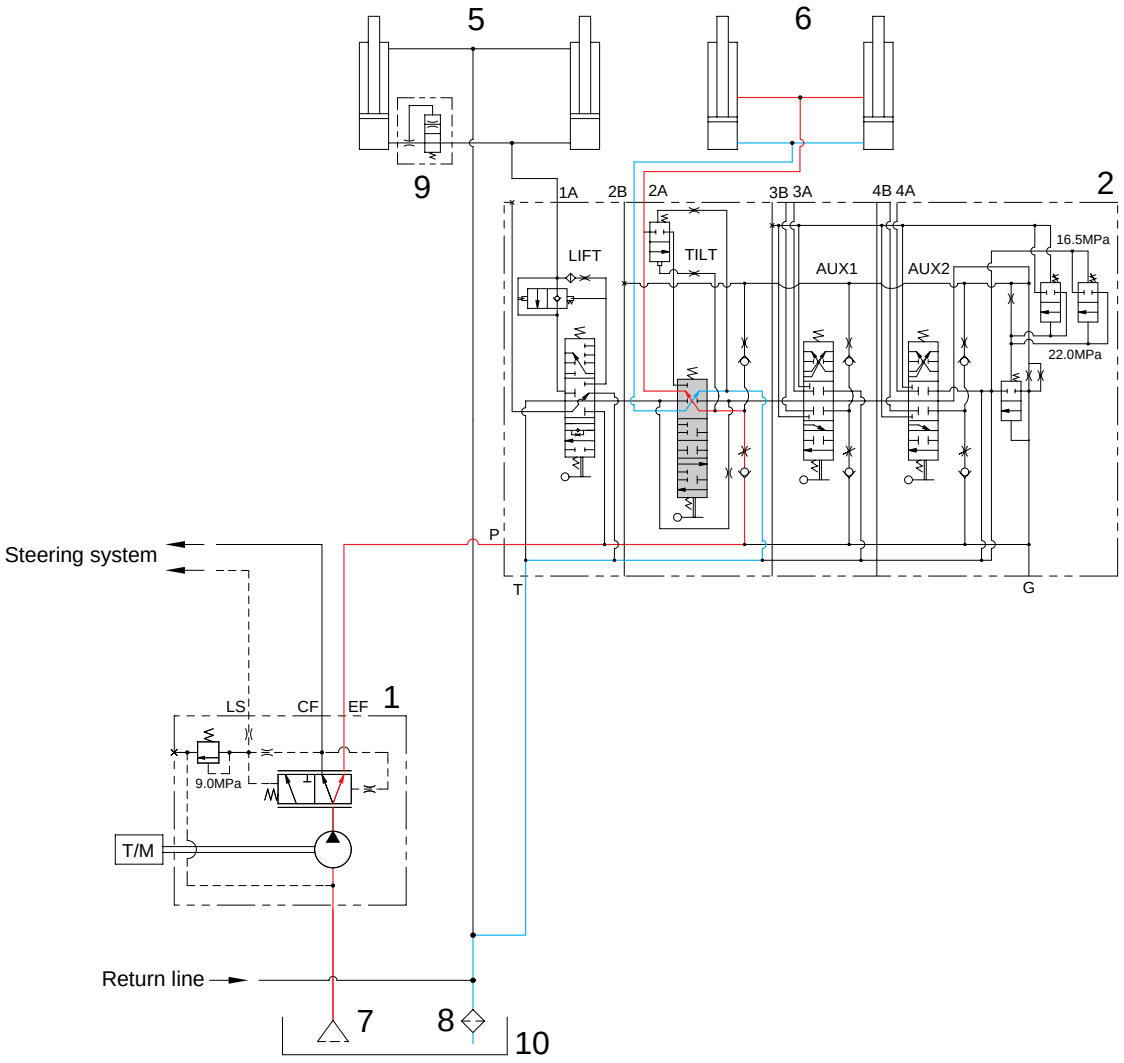

20L7HS06

When the tilt control lever is pulled back, the spool on the second block is moved to tilt backward position.

The oil from hydraulic gear pump(1) flows into main control valve(2) and then goes to the small chamber of tilt cylinder(6) by pushing the load check valve of the spool.

The oil at the large chamber of tilt cylinder(6) returns to hydraulic tank(10) at the same time.

When this happens, the mast tilts backward.

https://www.forkliftpdfmanuals.com/

2. HYDRAULIC GEAR PUMP

1) STRUCTURE (Booster brake)

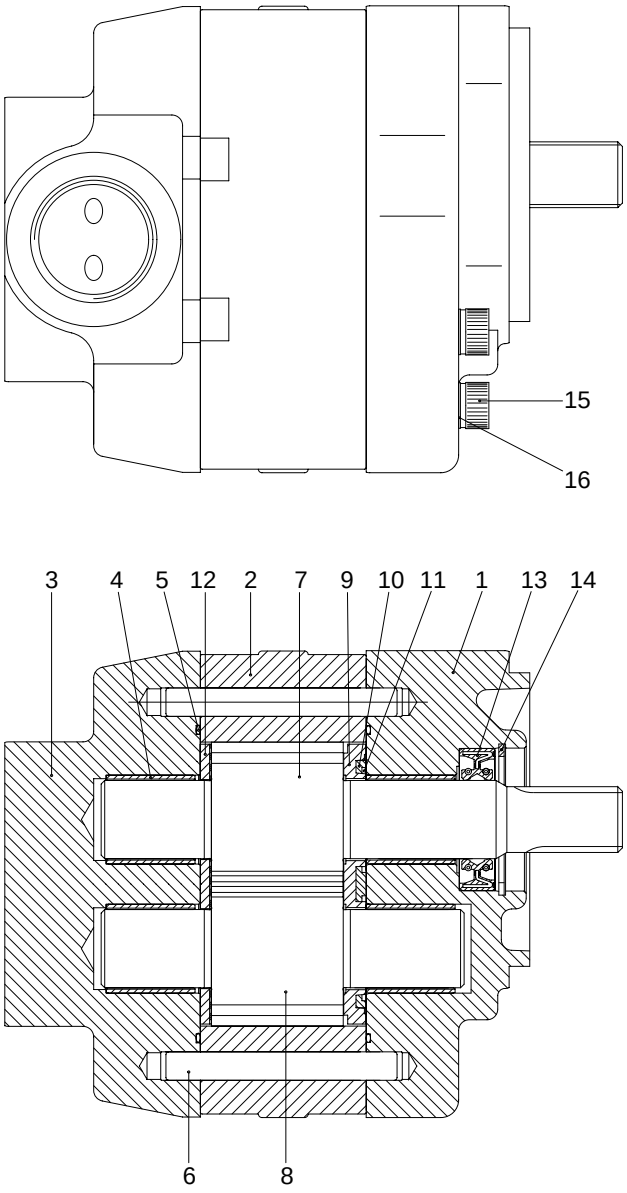

20D7HS14

1	Housing	7	Drive gear	12	Side plate
2	Body	8	Idle gear	13	Oil seal
3	Rear cover	9	Side plate	14	Snap ring
4	Bushing	10	O-ring	15	Bolt
5	O-ring	11	Back up ring	16	Washer
6	Pin				

https://www.forkliftpdfmanuals.com/

STRUCTURE (Non booster brake)

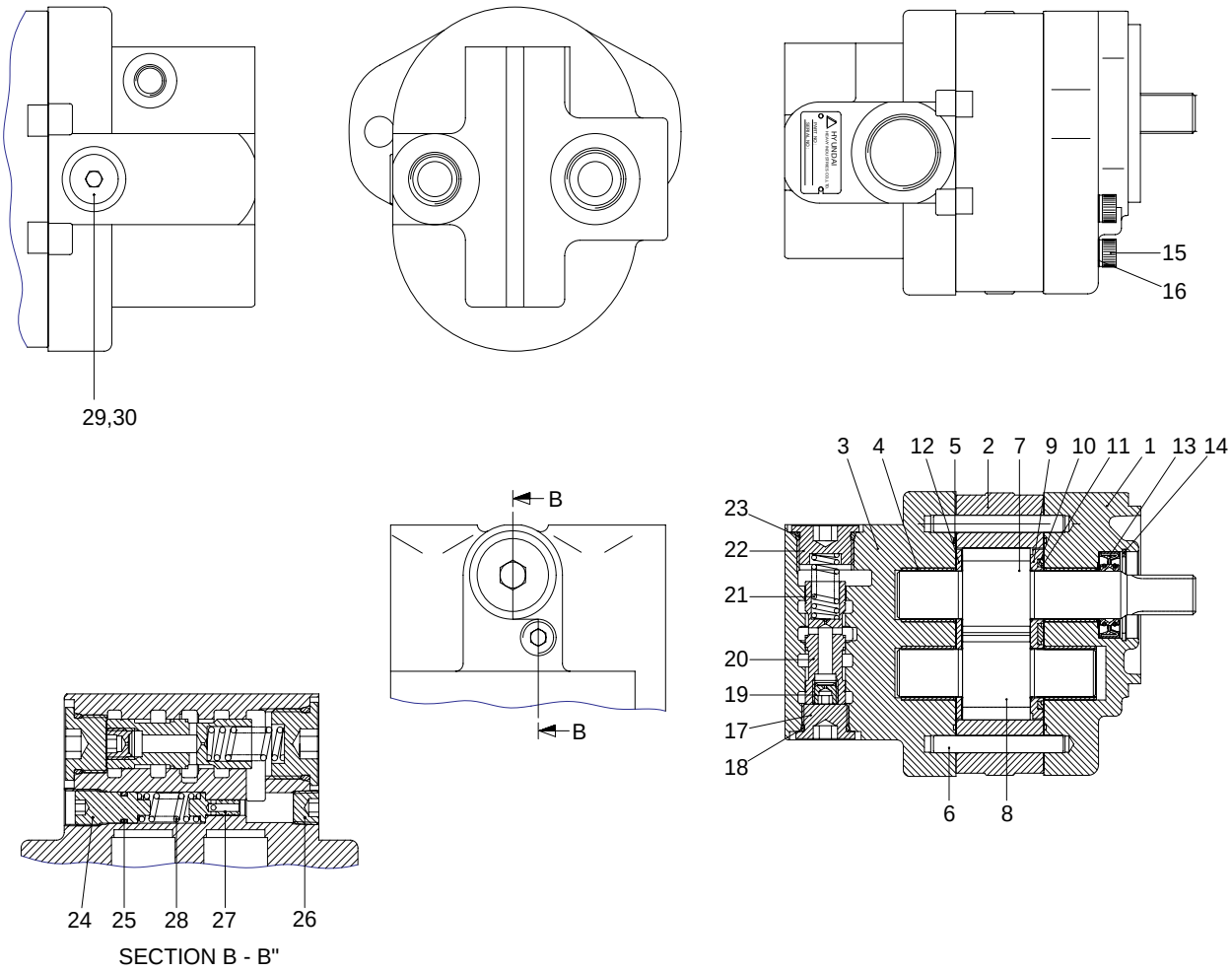

20L7HS07

1	Housing	11	Back up ring	21	Spring
2	Body	12	Side plate	22	Plug
3	Priority valve body	13	Oil seal	23	O-ring
4	Bushing	14	Snap ring	24	Adjust screw
5	O-ring	15	Bolt	25	O-ring
6	Pin	16	Washer	26	Bolt plug
7	Drive gear	17	Plug	27	Poppet
8	Idle gear	18	O-ring	28	Relief spring
9	Side plate	19	Orifice plug	29	Plug
10	O-ring	20	Spool	30	O-ring

https://www.forkliftpdfmanuals.com/

3. MAIN CONTROL VALVE

1) STRUCTURE (4- Spool)

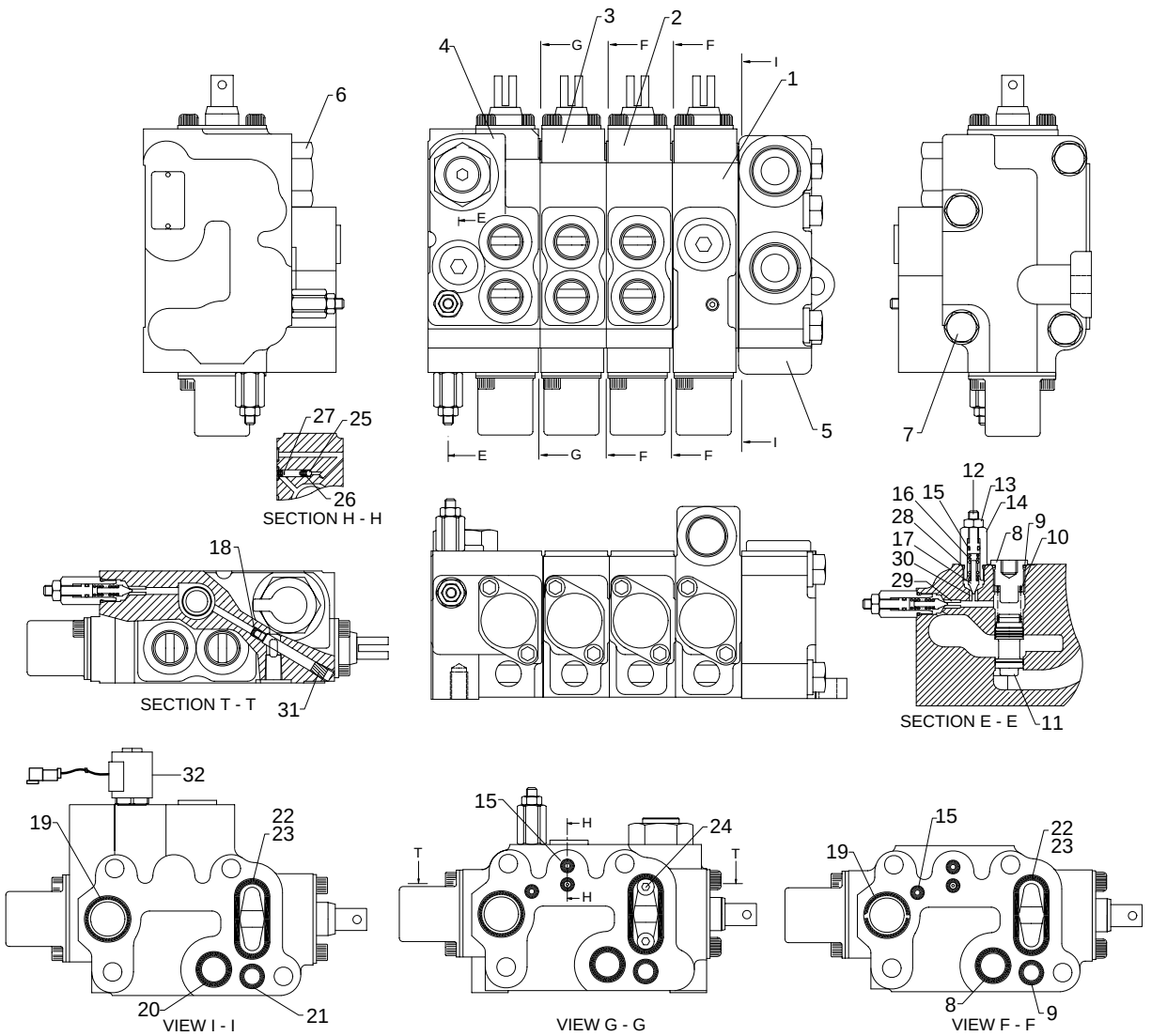

Port name	Size
Inlet port	1-1/16-12UNF-2B
Outlet port	1-1/16-12UNF-2B

20D7HS07

1	Lift block assy	12	Relief piston	22	O-ring
2	Tilt block assy	13	Nut	23	O-ring, retainer
3	Aux1 block assy	14	Relief plug	24	Plug
4	Aux2 block assy	15	O-ring	25	Steel ball
5	T cover	16	Relief spring	26	Load sensor spring
6	Gauge plug assy	17	Pilot poppet	27	Load sensor spring
7	Long bolt	18	Plug	28	O-ring
8	Hydrostat plug	19	O-ring	29	System relief seat
9	O-ring	20	O-ring	30	Secondary relief seat
10	Hydrostat spring	21	O-ring	32	Solenoid valve assy
11	Hydrostat sleeve				

https://www.forkliftpdfmanuals.com/

2) INLET SECTION OPERATION

(1) Structure and description

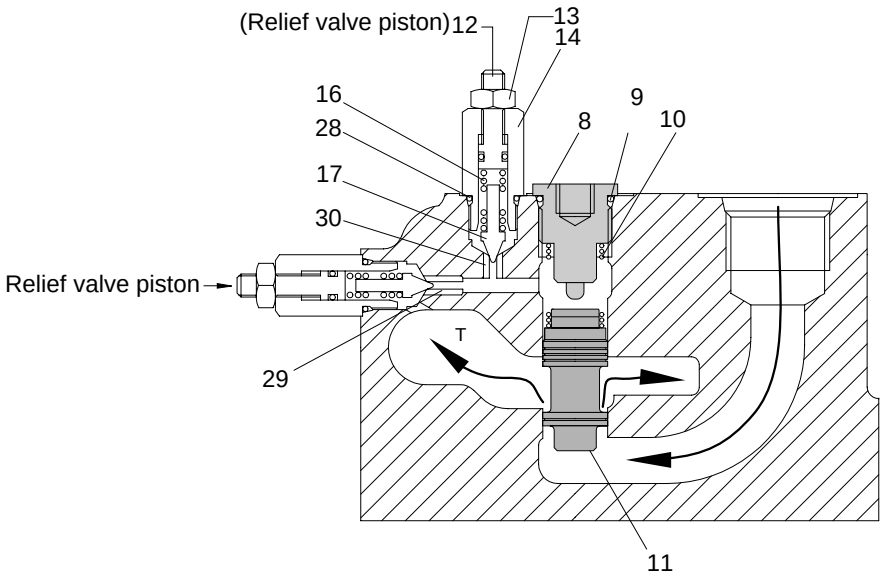

20D7HS08

8	Hydrostat plug	14	Relief plug
9	O-ring	16	Relief spring
10	Hydrostat spring	17	Pilot poppet
11	Hydrostat sleeve	28	O-ring
12	Relief piston	29	System relief seat
13	Nut	30	Secondary relief seat

https://www.forkliftpdfmanuals.com/

(2) Operation

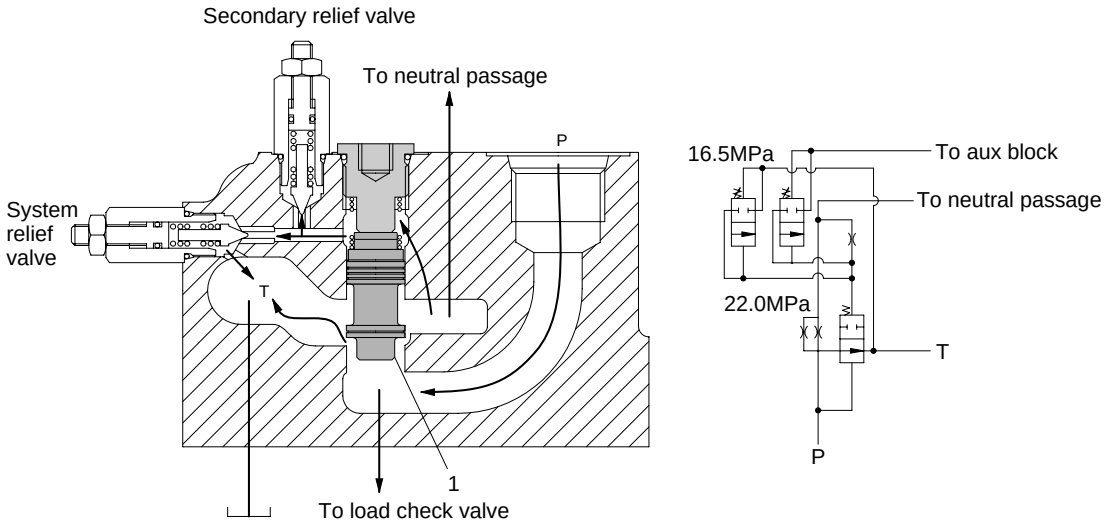

20L7HS15

Oil flows from P(pump) port to reservoir(T) by pushing hydrostat spool(1).
Before the center bypass line closed, hydrostat spool is keep opening, so pump port(P) and tank port(T) are always connected in operation to minimize heat generation.

https://www.forkliftpdfmanuals.com/

3) LIFT SECTION OPERATION

(1) Lift position

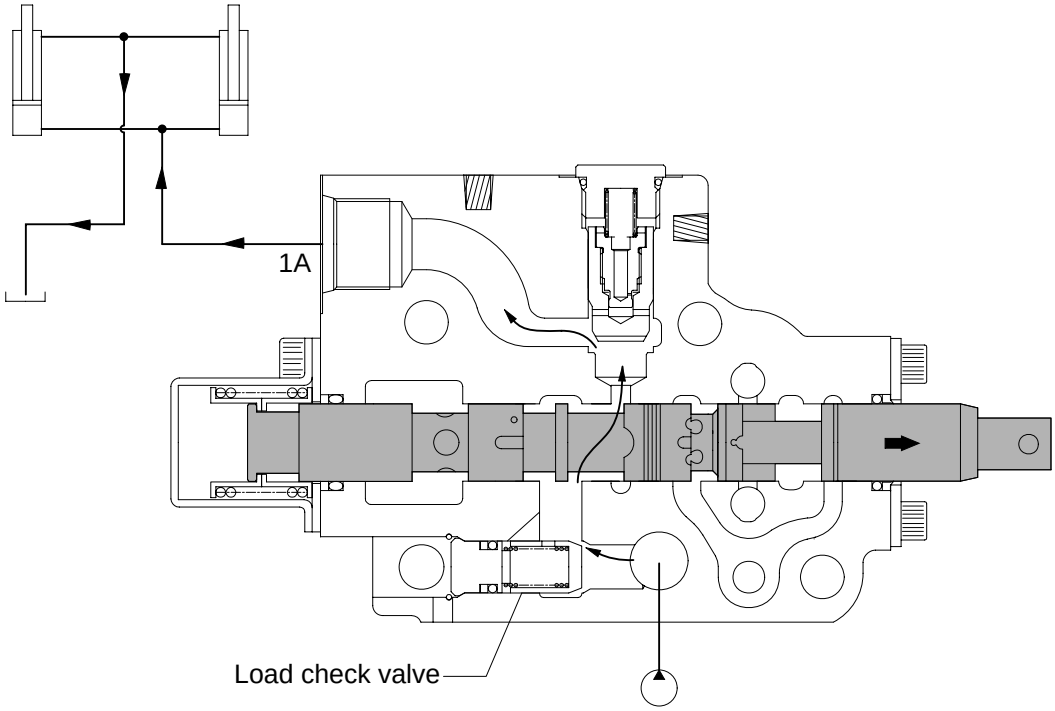

20D7HS09

When the lift control lever is pulled back, the spool moves to the right and the neutral passage is closed.
The oil supplied from the pump pushes up the load check valve and flow into lift cylinder port(1A).
The pump pressure reaches proportionally the load of cylinder and fine control finished by shut off of the neutral passage.
The return oil from cylinder flows into the tank.

https://www.forkliftpdfmanuals.com/

(2) Lower position

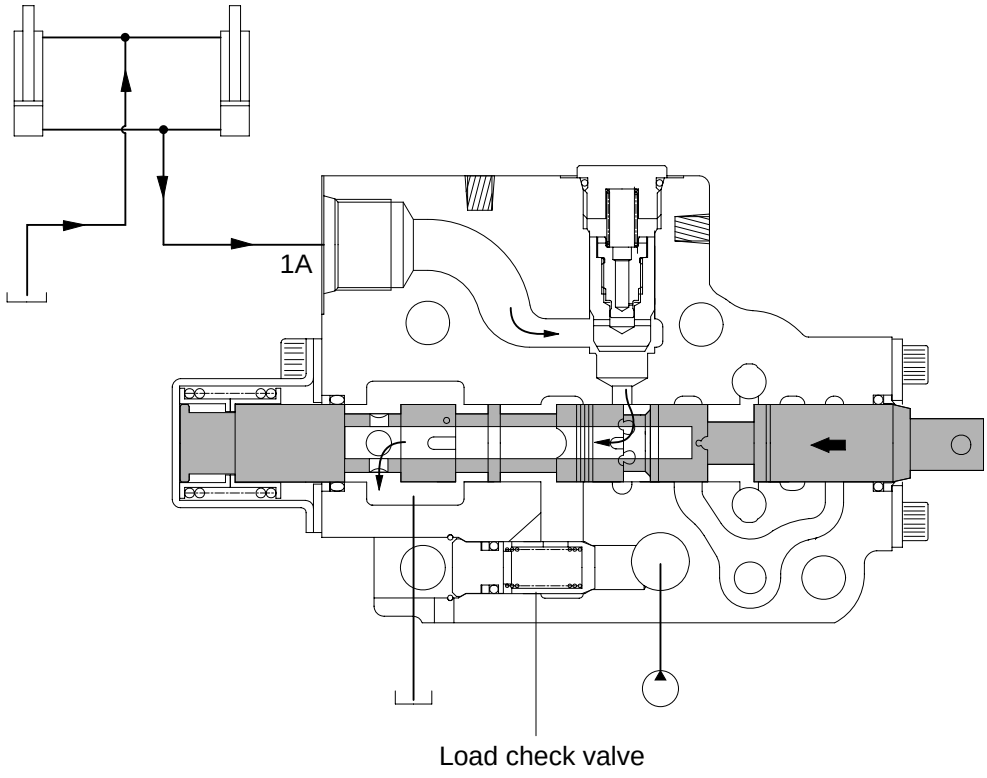

When the lift control lever is pushed forward, the spool moves to the left and the neutral passage is closed.
The spool moves to the lift lower position, opening up the neutral passage to tank and (1A) → T.
In lift lower position the fork drops due to its own weight.

https://www.forkliftpdfmanuals.com/

4) TILT SECTION OPERATION

(1) Tilt forward position

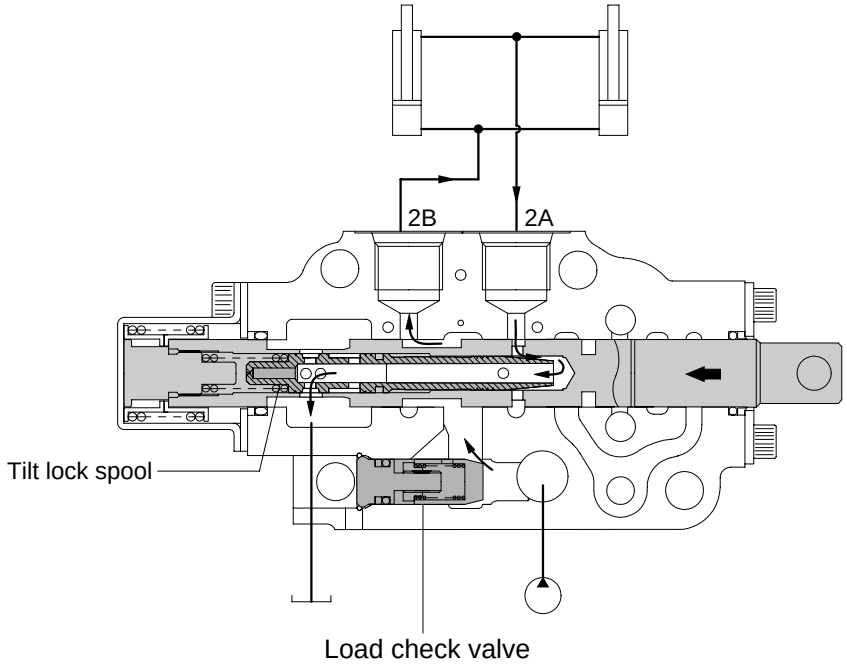

20D7HS11

When the tilt control lever is pushed forward, the spool moves to the left and the neutral passage is closed.
The oil supplied from the pump pushes up the load check valve and flow into tilt cylinder port(2B).
The pump pressure reaches proportionally the load of cylinders and fine control finished by closing the neutral passage.
The return oil from cylinder port(2A) flows into the tank through the hole of the tilt lock spool.

https://www.forkliftpdfmanuals.com/

(2) Tilt backward position

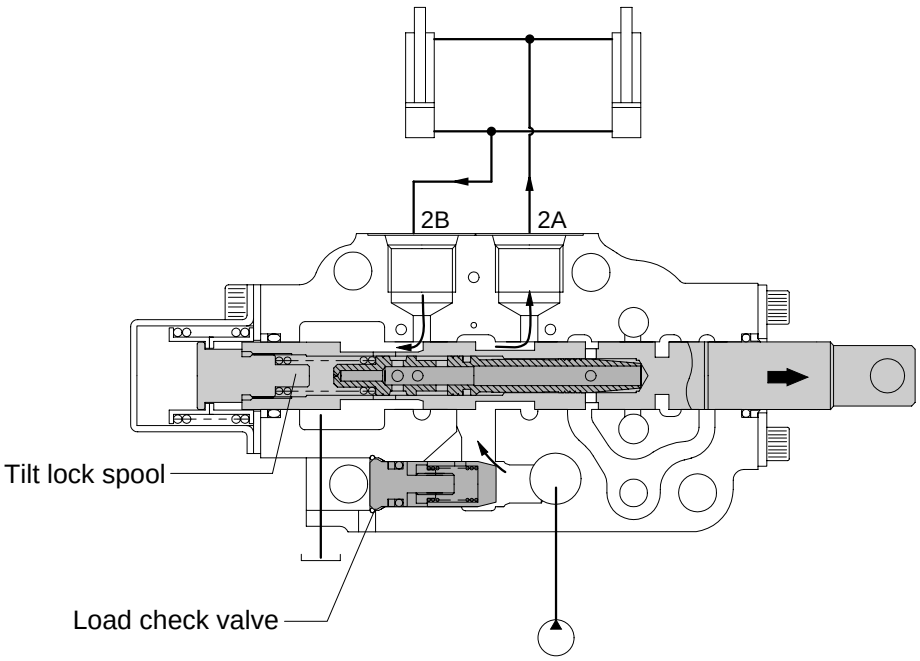

20D7HS12

When the tilt control lever is pulled back, the spool moves to the right and the neutral passage is closed.
The oil supplied from the pump pushes up the load check valve and flows into tilt cylinder port(2A).
The pump pressure reaches proportionally the load of cylinder and fine control finished by shut off of the neutral passage.
The return oil from cylinder port(2B) flows into the tank via the low pressure passage.

https://www.forkliftpdfmanuals.com/

5) MAIN RELIEF VALVE

(1) Pressure setting

A good pressure gauge must be installed in the line which is in communication with the work port relief. A load must be applied in a manner to reach the set pressure of the relief unit.

Procedure

① Loosen lock nut.
② Set adjusting bar to desired pressure setting.
③ Tighten lock nut.
④ Retest in similar manner as above.

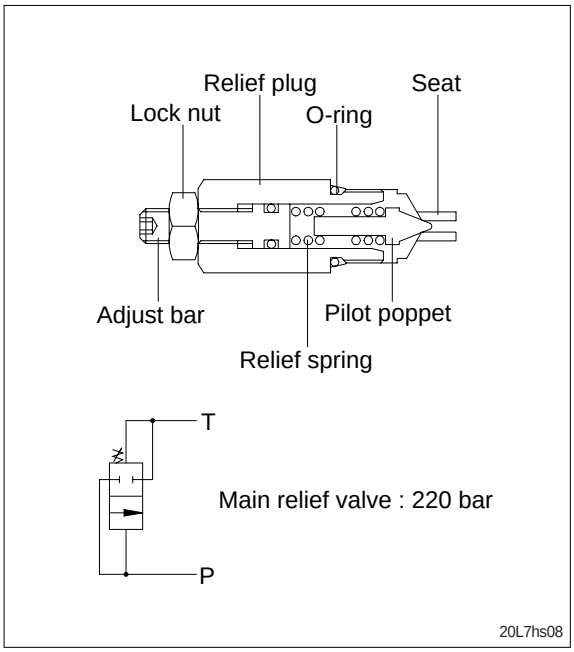

(2) Operation

Pressurized oil over the relief pressure pushes pilot poppet and flows to tank passage, therefore the system pressure keeps under the adjusted relief pressure.

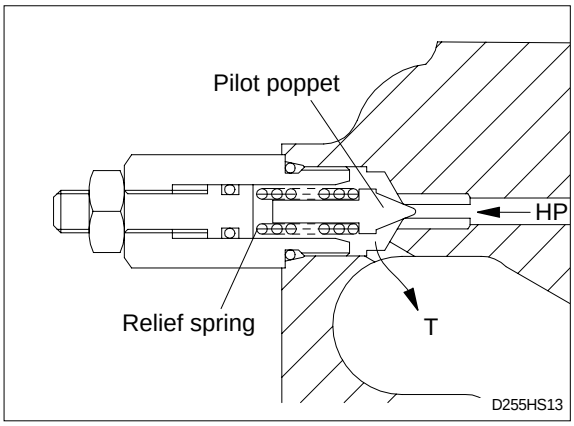

https://www.forkliftpdfmanuals.com/

4. LIFT CYLINDER

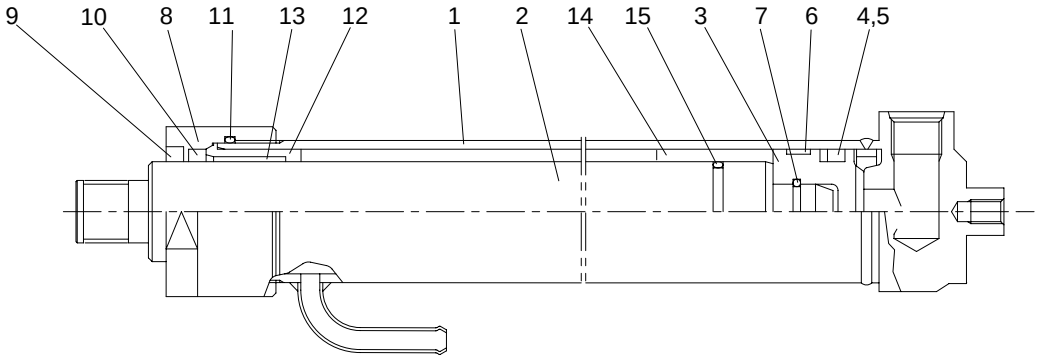

D255HS18

1	Tube assembly	6	Wear ring	11	O-ring
2	Rod	7	Retaining ring	12	Guide
3	Piston	8	Gland	13	DU bushing
4	Piston seal	9	Dust wiper	14	Spacer
5	Back up ring	10	Rod seal	15	O-ring

5. TILT CYLINDER

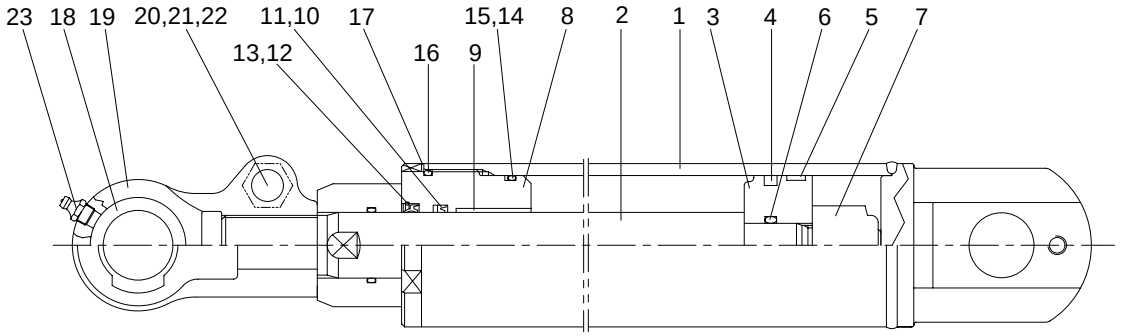

20L7HS19

1	Tube assembly	9	Bushing	17	Washer
2	Rod	10	U-packing	18	Eye
3	Piston	11	Back up ring	19	Bushing
4	Glyd ring	12	Dust wiper	20	Hexagon bolt
5	Wear ring	13	Stop ring	21	Spring washer
6	O-ring	14	O-ring	22	Lock nut
7	Hexagon nut	15	Back up ring	23	Grease nipple
8	Gland	16	O-ring		

https://www.forkliftpdfmanuals.com/

6. FREE LIFT CYLINDER

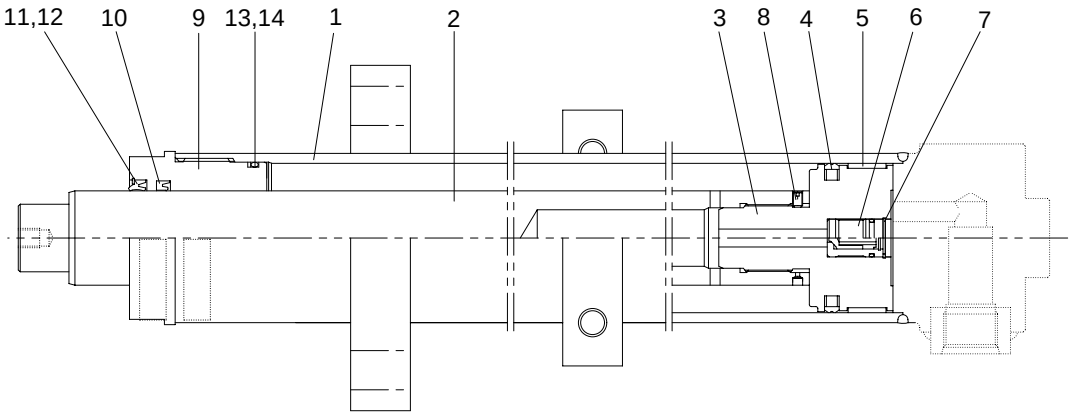

20L7HS20

1	Tube assembly	6	Check valve	11	Dust wiper
2	Rod	7	Retaining ring	12	Retaining ring
3	Piston	8	Set screw	13	O-ring
4	Piston seal	9	Gland	14	Back up ring
5	Wear ring	10	U-packing		

https://www.forkliftpdfmanuals.com/

GROUP 2 OPERATIONAL CHECKS AND TROUBLESHOOTING

1. OPERATIONAL CHECKS

1) CHECK ITEM

(1) Check visually for deformation, cracks or damage of rod.

(2) Set mast vertical and raise 1m from ground. Wait for 10 minutes and measure hydraulic drift(amount forks move down and amount mast tilts forward).

· Check condition

- Hydraulic oil : Normal operating temp
- Mast substantially vertical.
- Rated capacity load.

· Hydraulic drift

- Down(Downward movement of forks)
  : Within 100mm (3.9in)
- Forward(Extension of tilt cylinder)
  : Within 5°

(3) If the hydraulic drift is more than the specified value, replace the control valve or cylinder packing.

Check that clearance between tilt cylinder bushing and mounting pin is within standard range.

mm (in)

Standard	Under 0.6 (0.02)

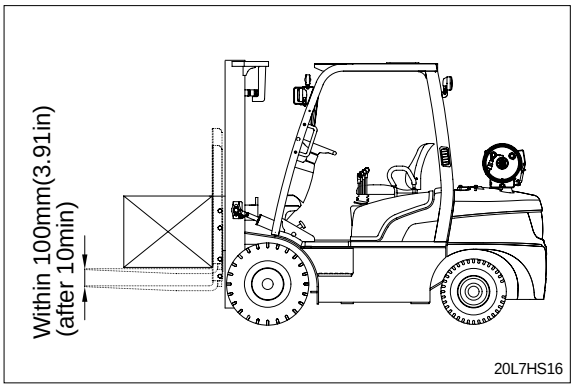

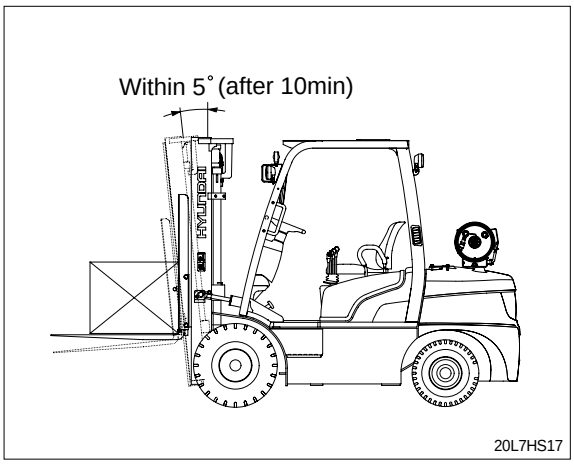

2) HYDRAULIC OIL

(1) Using dipstick, measure oil level, and oil if necessary.

(2) When changing hydraulic oil, clean suction strainer(screwed into outlet port pipe) and line filter(screwed into inlet pipe). Line filter uses paper element, so replace periodically(every 6 months or 1000 hours)

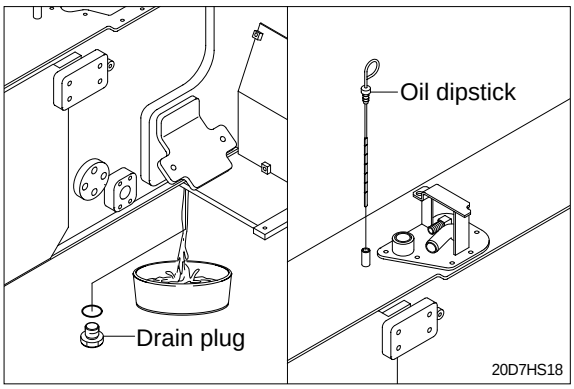

3) CONTROL VALVE

(1) Raise forks to maximum height and measure oil pressure.

Check that oil pressure is 220kgf/cm^2.
(3130psi)

https://www.forkliftpdfmanuals.com/

2. TROUBLESHOOTING

1) SYSTEM

Problem	Cause	Remedy
Large fork lowering speed.	· Seal inside control valve defective. · Oil leaks from joint or hose. · Seal inside cylinder defective.	· Replace spool or valve body. · Replace. · Replace packing.
Large spontaneous tilt of mast.	· Tilting backward : Check valve defective. · Tilting forward : tilt lock valve defective. · Oil leaks from joint or hose. · Seal inside cylinder defective.	· Clean or replace. · Clean or replace. · Replace. · Replace seal.
Slow fork lifting or slow mast tilting.	· Lack of hydraulic oil. · Hydraulic oil mixed with air. · Oil leaks from joint or hose. · Excessive restriction of oil flow on pump suction side. · Relief valve fails to keep specified pressure. · Poor sealing inside cylinder. · High hydraulic oil viscosity. · Mast fails to move smoothly. · Oil leaks from lift control valve spool. · Oil leaks from tilt control valve spool.	· Add oil. · Bleed air. · Replace. · Clean filter. · Adjust relief valve. · Replace packing. · Change to SAE10W, class CF engine oil. · Adjust roll to rail clearance. · Replace spool or valve body. · Replace spool or valve body.
Hydraulic system makes abnormal sounds.	· Excessive restriction of oil flow pump suction side. · Gear or bearing in hydraulic pump defective.	· Clean filter. · Replace gear or bearing.
Control valve lever is locked	· Foreign matter jammed between spool and valve body. · Valve body defective.	· Clean. · Tighten body mounting bolts uniformly.
High oil temperature.	· Lack of hydraulic oil. · High oil viscosity. · Oil filter clogged.	· Add oil. · Change to SAE10W, class CF engine oil. · Clean filter.

https://www.forkliftpdfmanuals.com/

2) HYDRAULIC GEAR PUMP

Problem	Cause	Remedy
Pump does not develop full pressure.	· System relief valve set too low or leaking. · Oil viscosity too low. · Pump is worn out.	· Check system relief valve for proper setting. · Change to proper viscosity oil. · Repair or replace pump.
Pump will not pump oil.	· Reservoir low or empty. · Suction strainer clogged.	· Fill reservoir to proper level. · Clean suction strainer.
Noisy pump caused by cavitation.	· Oil too thick. · Oil filter plugged. · Suction line plugged or too small.	· Change to proper viscosity. · Clean filters. · Clean line and check for proper size.
Oil heating.	· Oil supply low. · Contaminated oil. · Setting of relief valve too high or too low. · Oil viscosity too low.	· Fill reservoir to proper level. · Drain reservoir and refill with clean oil. · Set to correct pressure. · Drain reservoir and fill with proper viscosity.
Foaming oil.	· Low oil level. · Air leaking into suction line. · Wrong kind of oil.	· Fill reservoir to proper level. · Tighten fittings, check condition of line. · Drain reservoir, fill with non-foaming oil.
Shaft seal leakage.	· Worn shaft seal. · Worn shaft in seal area.	· Replace shaft seal. · Replace drive shaft and seal.

3) MAIN RELIEF VALVE

Problem	Cause	Remedy
Can't get pressure	· Poppet D, E or K stuck open or contamination under seat.	· Check for foreign matter between poppets D, E or K and their mating parts. Parts must slide freely.
Erratic pressure	· Pilot poppet seat damaged.	· Replace the relief valve. · Clean and remove surface marks for free movement.
Pressure setting not correct	· Normal wear. Lock nut & adjust screw loose.	· See page 6-16 for how to set pressure on work main relief.
Leaks	· Damaged seats. · Worn O-rings. · Parts sticking due to contamination.	· Replace the relief valve. · Install seal and spring kit. · Disassemble and clean.

https://www.forkliftpdfmanuals.com/

4) LIFT CYLINDER

Problem	Cause	Remedy
Oil leaks out from gland through rod.	· Foreign matters on packing. · Unallowable score on rod. · Unusual distortion of dust seal. · Chrome plating is striped.	· Replace packing. · Smooth rod surface with an oil stone. · Replace dust seal. · Replace rod.
Oil leaks out from cylinder gland thread.	· O-ring damaged.	· Replace O-ring.
Rod spontaneously retract.	· Scores on inner surface of tube. · Unallowable score on the inner surface of tube. · Foreign matters in piston seal.	· Smooth rod surface with an oil stone. · Replace cylinder tube. · Replace piston seal.
Wear(clearance between cylinder tube and wear ring)	· Excessive clearance between cylinder tube and wear ring.	· Replace wear ring.
Abnormal noise is produced during tilting operation.	· Insufficient lubrication of anchor pin or worn bushing and pin. · Bent tilt cylinder rod.	· Lubricate or replace. · Replace.

https://www.forkliftpdfmanuals.com/

1. HYDRAULIC GEAR PUMP

※ **Tools required**

- Metric socket set
- Internal snap ring pliers
- Shaft seal sleeve
- Torque wrench

(1) It is very important to work in a clean work area when repairing hydraulic products. Plug ports and wash exterior of pump with a proper cleaning solvent before continuing.

(2) Remove port plugs and drain oil from pump.

(3) Use a permanent marker pen to mark a line across the mounting flange, gear housing and end cover. This will assure proper reassembly and rotation of pump.

(4) Remove key from drive shaft if applicable.

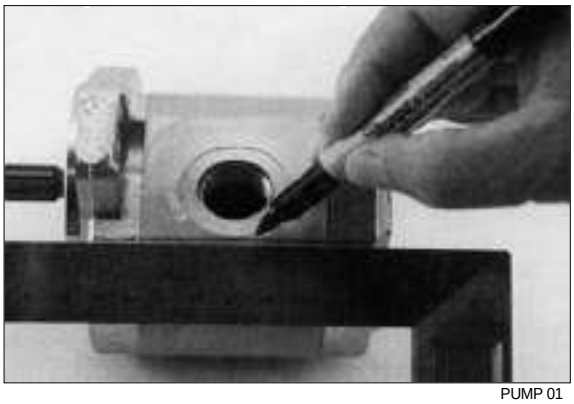

PUMP 01

(5) Clamp mounting flange in a protected jaw vise with pump shaft facing down.

(6) Loosen the four metric hexagon head bolts.

(7) Remove pump from vise and place on clean work bench, remove the four hexagon head bolts and spacers applicable.

PUMP 02

https://www.forkliftpdfmanuals.com/

(8) Lift and remove end cover.

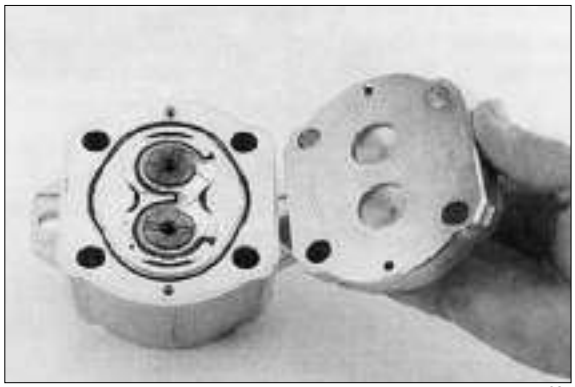

PUMP 03

(9) Carefully remove gear housing and place on work bench. Make sure the rear bearing block remains on the drive and idler shafts.

PUMP 04

(10) Remove rear bearing block from drive and idler shafts.

PUMP 05

(11) Remove idler shaft from bearing block.

PUMP 06

https://www.forkliftpdfmanuals.com/

(12) Remove drive shaft from mounting flange. There is no need to protect the shaft seal as it will be replaced as a new item.

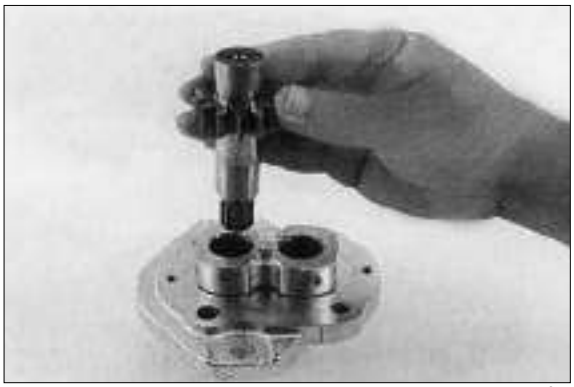

PUMP 07

(13) Remove the front bearing block.

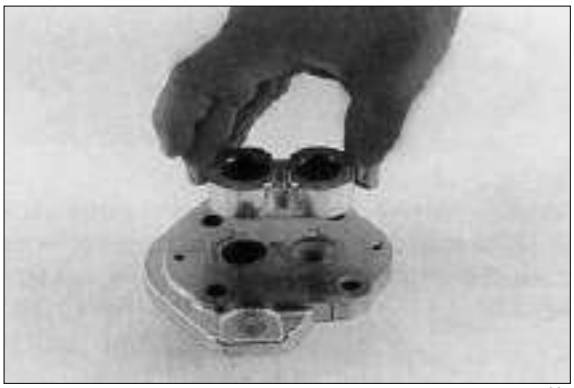

PUMP 08

(14) Turn mounting flange over, with shaft seal up, and remove the retaining ring with proper snap ring pliers.

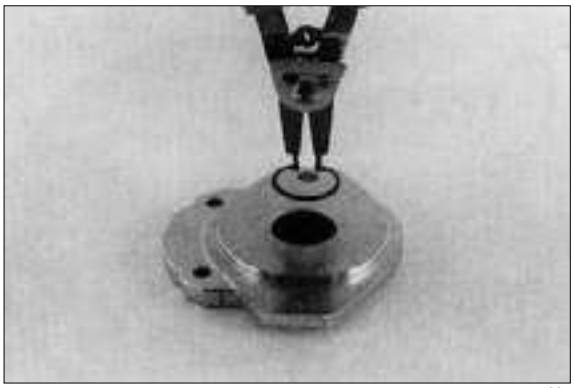

PUMP 09

(15) Remove the oil seal from mounting flange, be careful not to mar or scratch the seal bore.

(16) Remove the dowel pins from the gear housing. Do not lose pins.

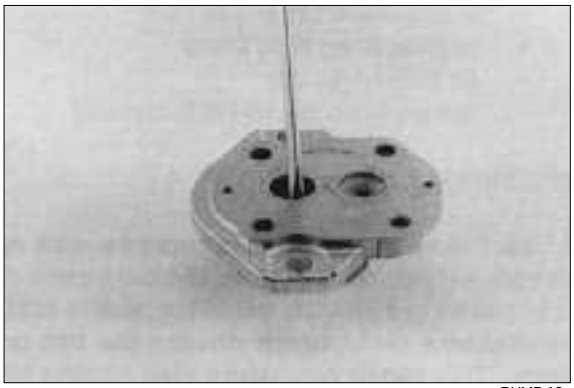

PUMP 10

https://www.forkliftpdfmanuals.com/

(17) Remove seals from both bearing blocks and discard.

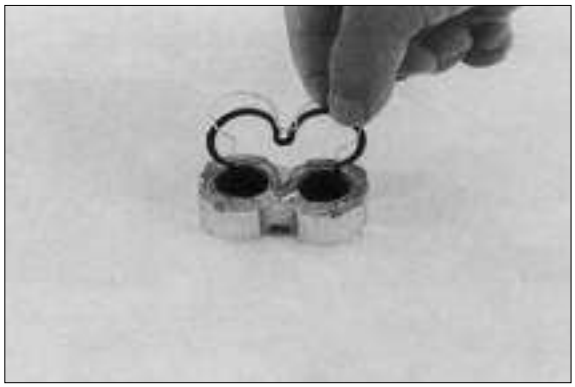

PUMP 11

2) INSPECT PARTS FOR WEAR

(1) Clean and dry all parts thoroughly prior to inspection. It is not necessary to inspect the seals as they will be replaced as new items.

(2) Check drive shaft spline for twisted or broken teeth, check keyed drive shaft for broken or chipped keyway. No marks or grooves on shaft in seal area, some discoloration of shaft is allowable.

(3) Inspect both the drive gear shaft and idler gear shafts at the bearing points and seal area for rough surfaces and excessive wear.

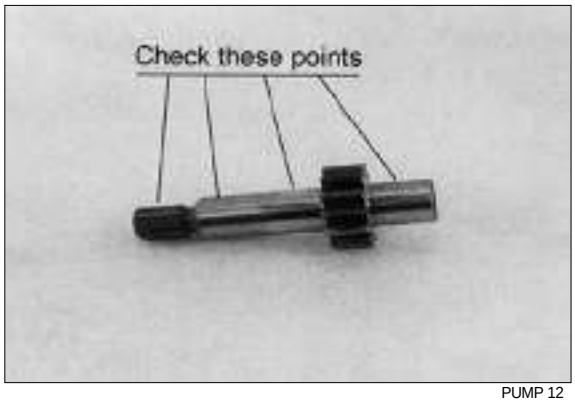

PUMP 12

(4) Inspect gear face for scoring or excessive wear. If the face edge of gear teeth are sharp, they will mill into the bearing blocks. If wear has occurred, the parts are unusable.

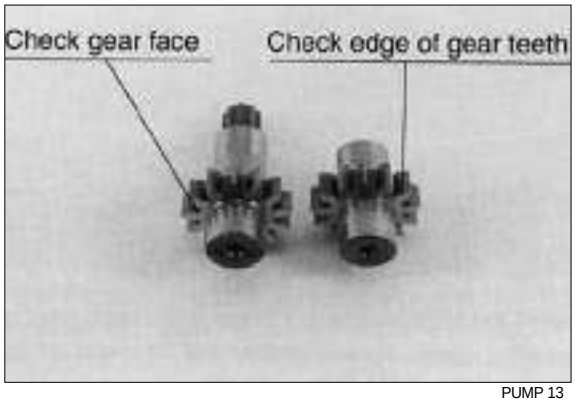

PUMP 13

https://www.forkliftpdfmanuals.com/

(5) Inspect bearing blocks for excessive wear or scoring on the surfaces which are in contact with the gears. Also inspect the bearings for excessive wear or scoring.

(6) Inspect the area inside the gear housing. It is normal for the surface inside the gear housing to show a clean "wipe" on the inside surface on the intake side. There should not be excessive wear or deep scratches and gouges.

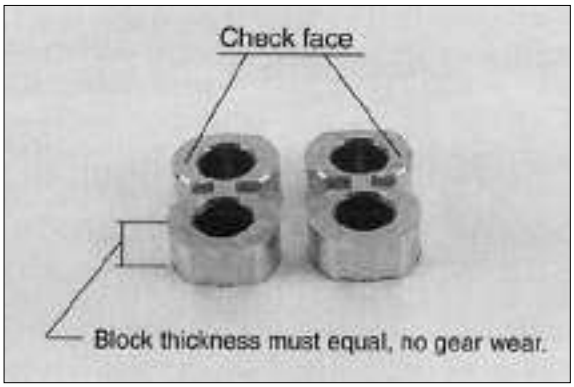

PUMP 14

※ **General information**
It is important that the relationship of the mounting flange, bearing blocks and gear housing is correct. Failure to properly assemble this pump will result with little or no flow at rated pressure.

※ **This pump is not bi-rotational.**

https://www.forkliftpdfmanuals.com/

3) ASSEMBLY

※ **New seals should be installed upon reassembly of pump.**

(1) Install new shaft seal in mounting flange with part number side facing outboard. Press the seal into the seal bore until the seal reaches the bottom of the bore. Uniform pressure must be used to prevent misalignment or damage to the seal.

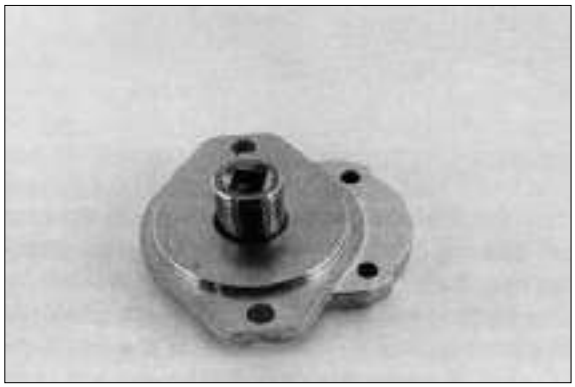

PUMP 15

(2) Install retaining ring in groove in seal bore of mounting flange.

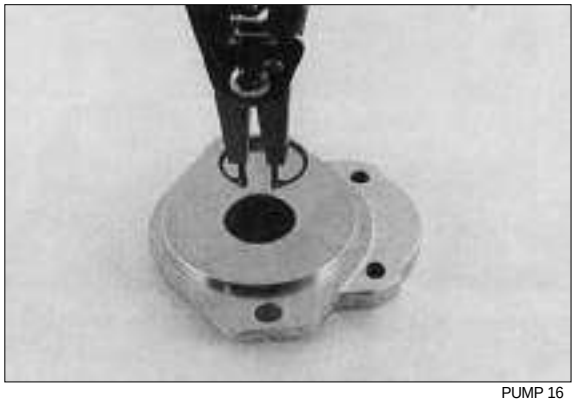

PUMP 16

(3) Place front and back bearing blocks on a clean surface with the E-seal grooves facing up. Apply a light coating of petroleum jelly in the grooves. Also coat the E-seal and backup with the petroleum jelly, this will help keep the seals in place during assembly.

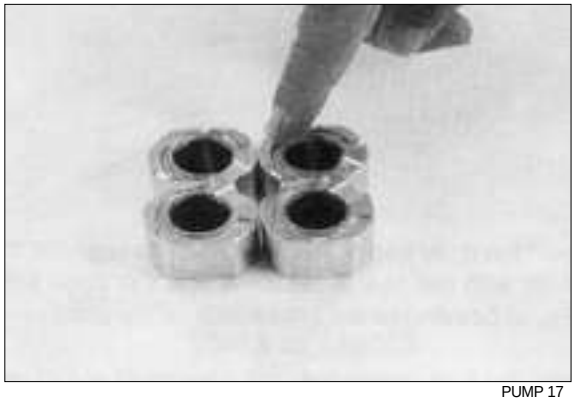

PUMP 17

(4) Place the E-seals, flat side outward, into the grooves in both bearing blocks. Follow by carefully placing the backup ring, flat side outward, in the groove made by the E-seal and the groove in the bearing block.

(5) Place mounting flange, with shaft seal side down, on a clean flat surface.

(6) Apply a light coating of petroleum jelly to the exposed face of the front bearing block.

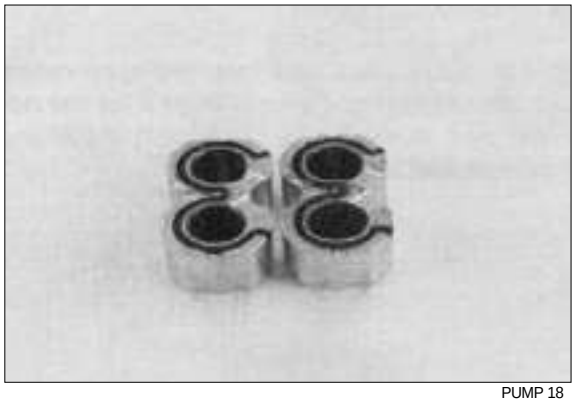

PUMP 18

https://www.forkliftpdfmanuals.com/

(7) Insert the drive end of the drive shaft through the bearing block with the seal side down, and the open side of the E-seal pointing to the intake side of the pump.

(8) Install the seal sleeve over the drive shaft and carefully slide the drive shaft through the shaft seal. Remove the seal sleeve from shaft.

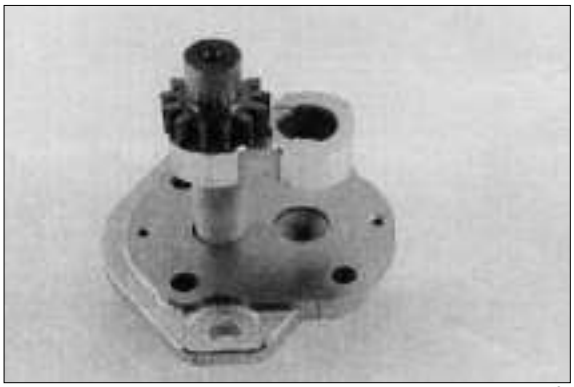

PUMP 19

(9) Install the idler gear shaft in the remaining position in the bearing block. Apply a light coat of clean oil to the face of the drive and idler gears.

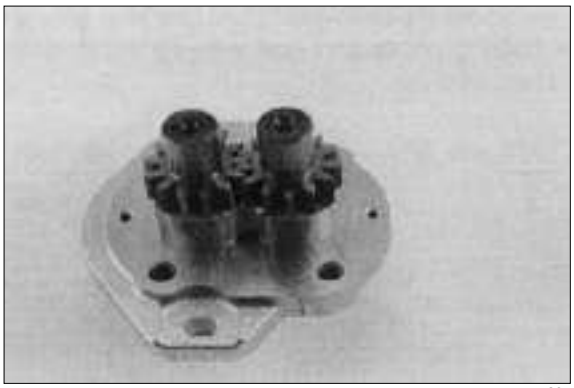

PUMP 20

(10) Pick up the rear bearing block, with seal side up and with open end of the E-seal facing the intake side of the pump, place over the drive and idler gear shafts.

(11) Install two dowel pins in the holes in the mounting flange or two long dowel pins through gear housing if pump is a multiple section pump.

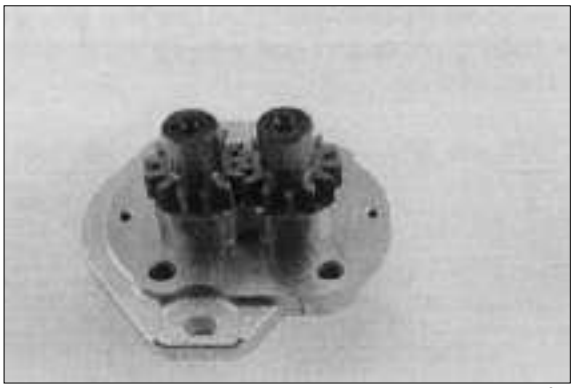

PUMP 21

(12) To install the O-rings in the gear housing, apply a light coating of petroleum jelly in the grooves on both sides of the gear housing.

Also coat the new O-ring and install them in the grooves.

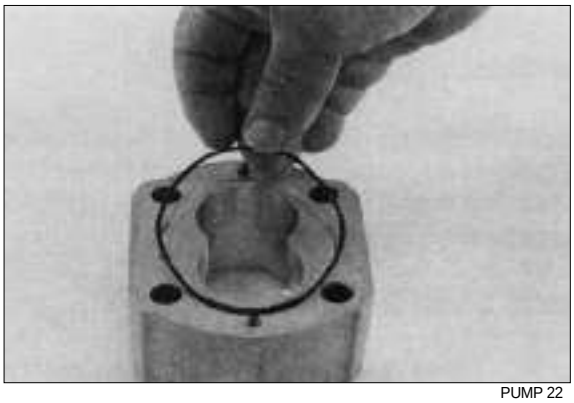

PUMP 22

https://www.forkliftpdfmanuals.com/

(13) Gently slide the gear housing over the rear bearing block assembly, slide housing down until the housing engages the dowel pins. Press firmly in place with hands, do not force or use any tool.
Check to make sure the intake port in the housing in on the same side as the open end of the E-seal and that the marked lines on the mounting flange and gear housing are in alignment.

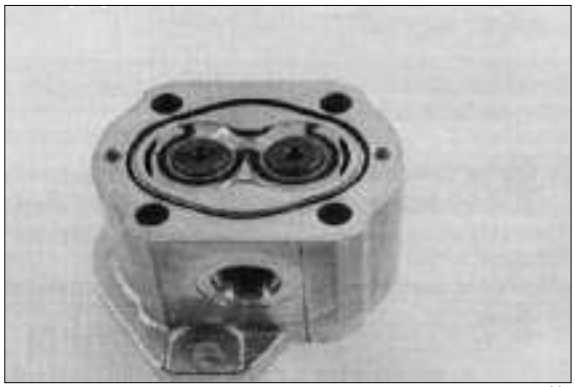
PUMP 23

(14) The surface of the rear bearing block should be slightly below the face of the gear housing. If the bearing block sits higher then the rear face of the gear housing then the E-seal or O-ring have shifted out of the groove. If this is the case, remove the gear housing and check for proper seal installation.

(15) Install the two remaining dowel pins in the rear of the gear housing and place the end cover over the back of the pump.

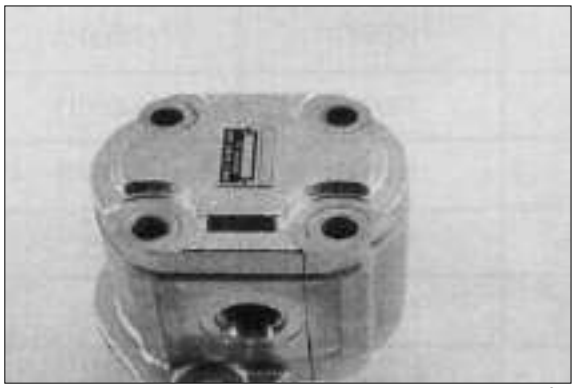
PUMP 24

(16) Install the four spacers and hexagon head bolts through the bolt holes in the end cover, hand tighten.

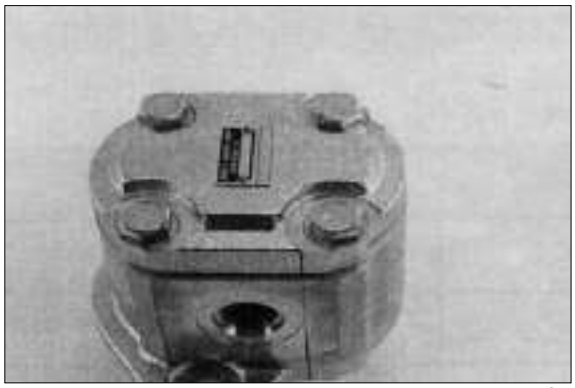
PUMP 25

https://www.forkliftpdfmanuals.com/

(17) Place mounting flange of the pump back in the protected jawed vise and alternately torque the bolts.

・Tighten torque : 3.0~4.0kgf・m
(22~29lbf・ft)

(18) Remove pump from vise.

(19) Place a small amount of clean oil in the inlet of the pump and rotate the drive shaft away from the inlet one revolution. If the drive shaft binds, disassemble the pump and check for assembly problems, then reassemble the pump.

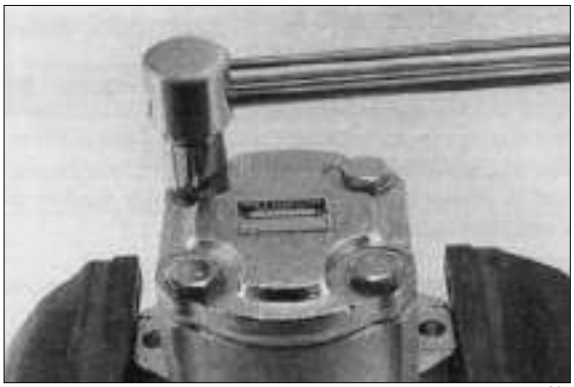

PUMP 26

https://www.forkliftpdfmanuals.com/

2. MAIN CONTROL VALVE

1) Remove bolt (1) to separate the valve section.

20D7MCV01

2) Divide the valve body.

20D7MCV02

3) Remove dust cap (3) and bolt (2) from the valve body.

20D7MCV03

4) Remove attachment spool (4) from the valve body.

20D7MCV04

https://www.forkliftpdfmanuals.com/

5) Remove O-ring seals (5) from the valve body.

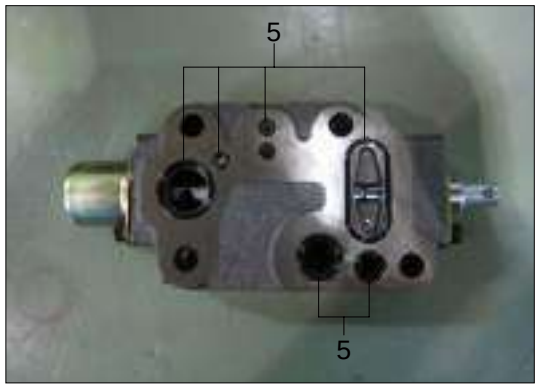

20D7MCV05

6) Remove tilt spool (6) from the valve body.

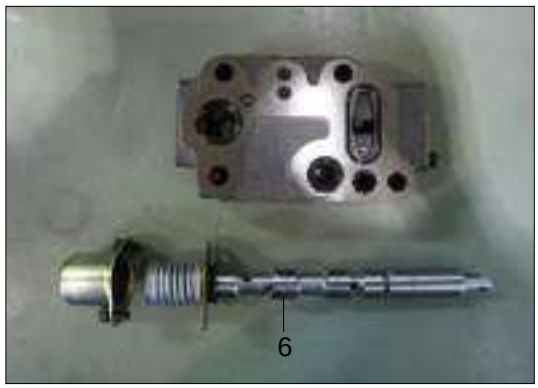

20D7MCV06

7) Remove lift spool (7) from the valve body.

8) Remove lock poppet (8) from the valve body.

9) Remove normal close solenoid valve (9, Opt) from the valve body.

20D7MCV07

10) Remove plug (12) and spring (11).

11) Remove hydrostate (10).

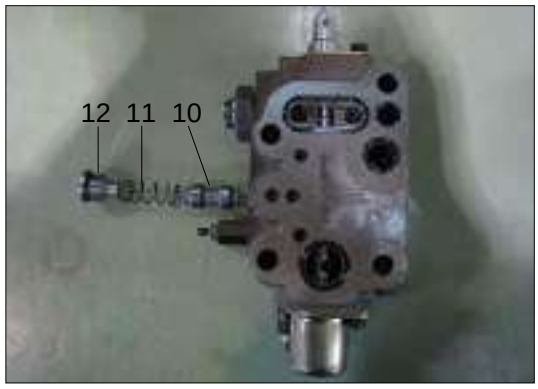

20D7MCV08

https://www.forkliftpdfmanuals.com/

12) Remove relief plugs (15), springs (14) and poppets (13).

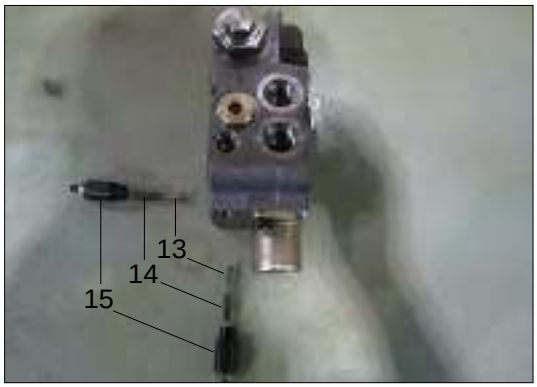

20D7MCV09

13) Remove normal open solenoid valve (16, Opt) from the valve body.

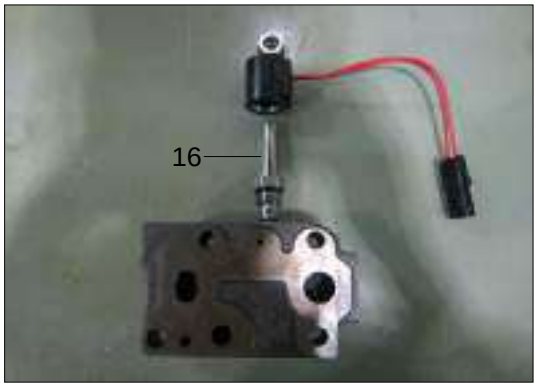

20D7MCV10

https://www.forkliftpdfmanuals.com/

3. LIFT CYLINDER

1) STRUCTURE

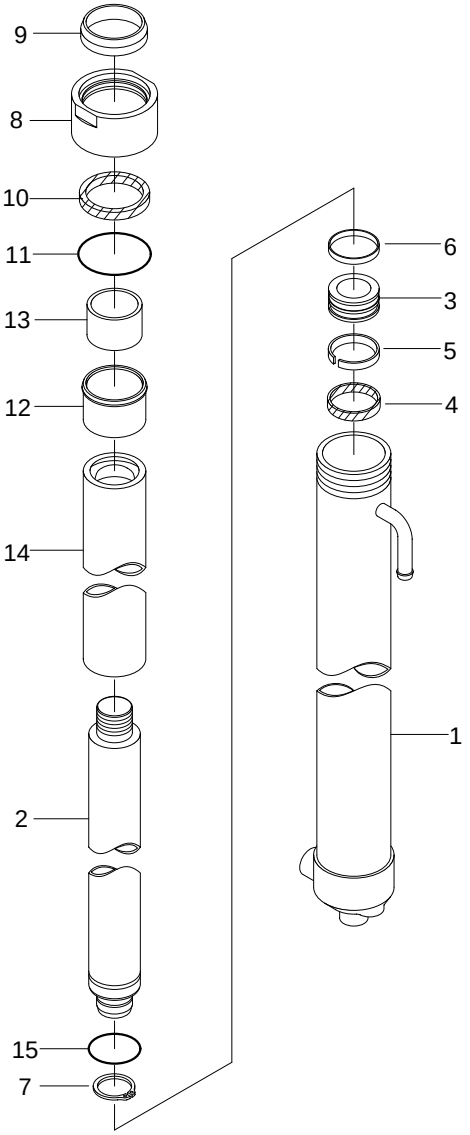

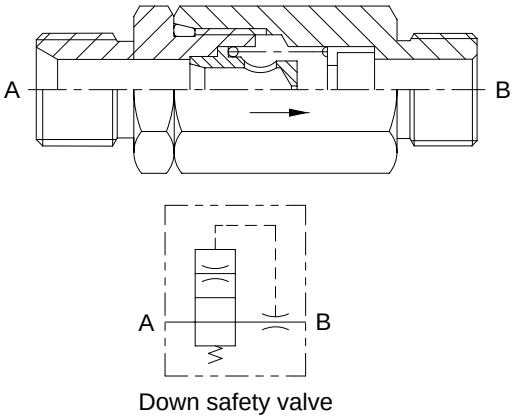

Down safety valve

D255HS24

1	Tube assy	6	Wear ring	11	O-ring
2	Rod assy	7	Retaining ring	12	Guide
3	Piston	8	Gland	13	Du bushing
4	Piston seal	9	Dust wiper	14	Spacer
5	Back up ring	10	Rod seal	15	O-ring

https://www.forkliftpdfmanuals.com/

2) DISASSEMBLY

(1) Hold the cylinder tube in a vice, loosen the cylinder head and remove it.
Remove the spacer from the cylinder tube and knock out the bushing. Hook a wrench in the hole in the retainer at the piston end and turn. Lever up the edge of the guide, then turn the guide in again and the guide can be removed.

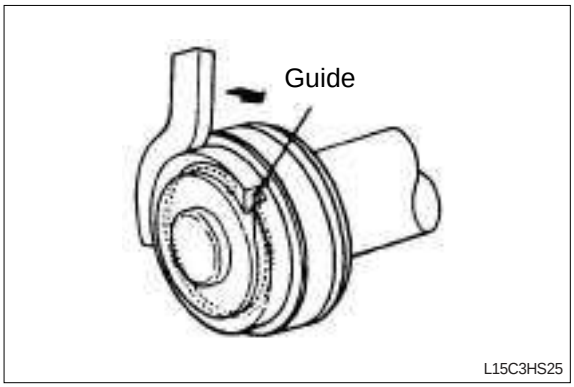

3) CHECK AND INSPECTION

mm(in)

Check item	Standard size	Repair limit	Remedy
Clearance between cylinder rod & bushing	0.072~0.288 (0.003~0.011)	0.5 (0.020)	Replace bushing
Clearance between piston ring & tube	0.05~0.030 (0.002~0.012)	0.5 (0.020)	Replace piston ring

4) ASSEMBLY

(1) Soak the piston ring in hydraulic oil at a temperature of 40 to 50°C, expand the inside diameter and assemble on the piston. Install a piston seal.
Bend the edge of the guide and rotate it to install the guide completely.

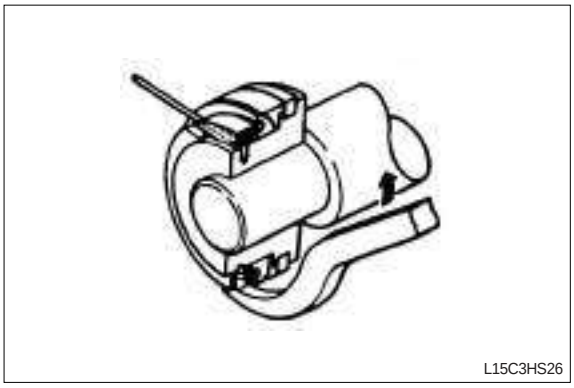

https://www.forkliftpdfmanuals.com/

4. TILT CYLINDER

1) STRUCTURE

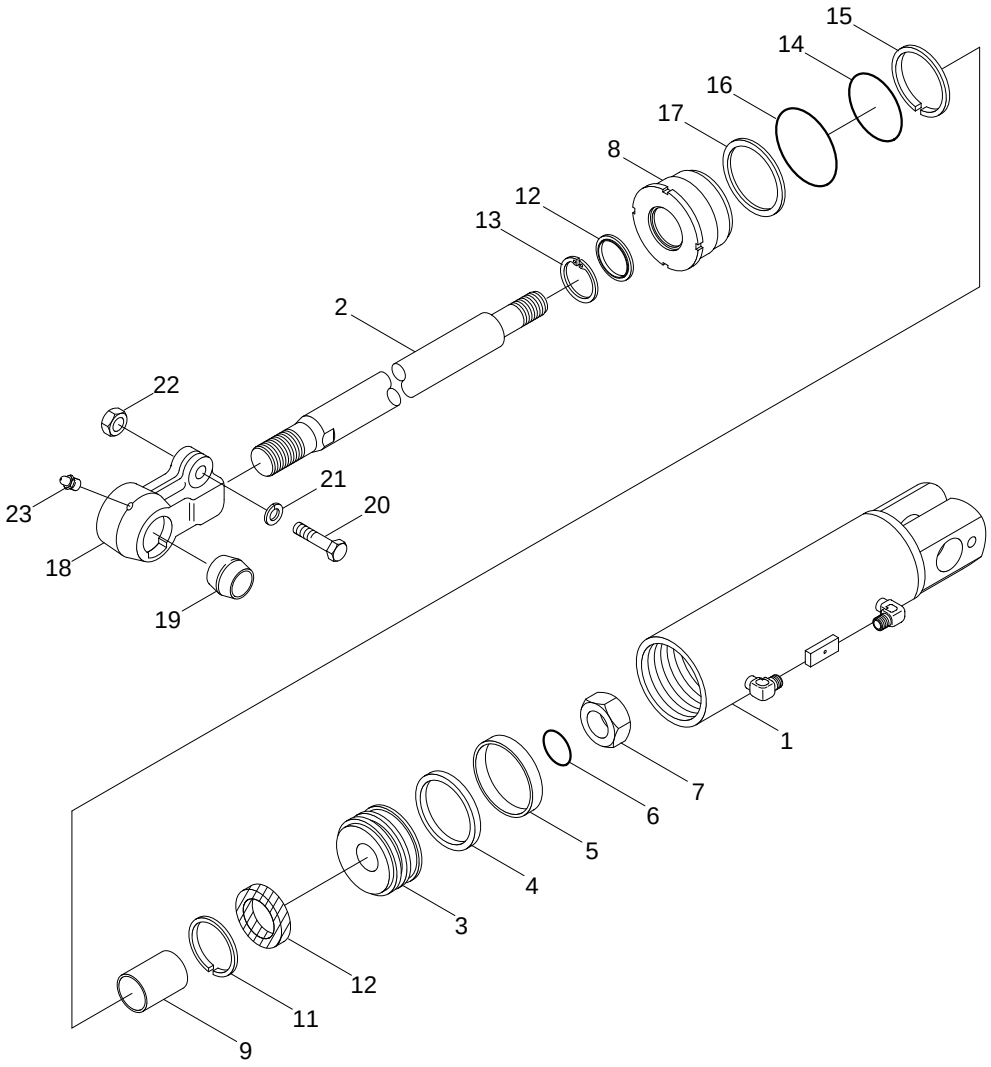

20L7HS27

1	Tube assembly	9	Bushing	17	Washer
2	Rod	10	U-packing	18	Eye
3	Piston	11	Back up ring	19	Bushing
4	Glyd ring	12	Dust wiper	20	Hexagon bolt
5	Wear ring	13	Stop ring	21	Spring washer
6	O-ring	14	O-ring	22	Lock nut
7	Nylon nut	15	Back up ring	23	Grease nipple
8	Rod cover	16	O-ring		

https://www.forkliftpdfmanuals.com/

2) DISASSEMBLY

(1) Hold the parallel parts of the cylinder tube bottom in a vice and mark the rod head end to show how much it is screwed in, then remove the rod head. Next, hook a wrench into the notch at the cylinder head and remove the cylinder head from cylinder tube.
When doing this, wind tape round the threaded part of the rod and be careful not to damage the dust seal and rod seal inside cylinder head.

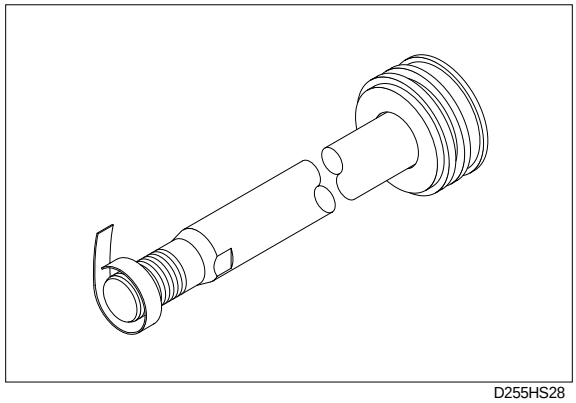

D255HS28

3) CHECK AND INSPECTION

mm(in)

Check item	Standard size	Repair limit	Remedy
Clearance between cylinder rod & bushing	0.072~0.288 (0.003~0.011)	0.5 (0.020)	Replace bushing
Clearance between rod head bushing & pin	0.10~0.35 (0.004~0.014)	0.6 (0.024)	Replace bushing

https://www.forkliftpdfmanuals.com/

SECTION 7 ELECTRICAL SYSTEM

Group 1 Component Location ····· 7-1
Group 2 Electrical Circuit ····· 7-2
Group 3 Component Specification ····· 7-12
Group 4 Connector Destination ····· 7-13
Group 5 Troubleshooting ····· 7-15

https://www.forkliftpdfmanuals.com/

GROUP 1 COMPONENT LOCATION

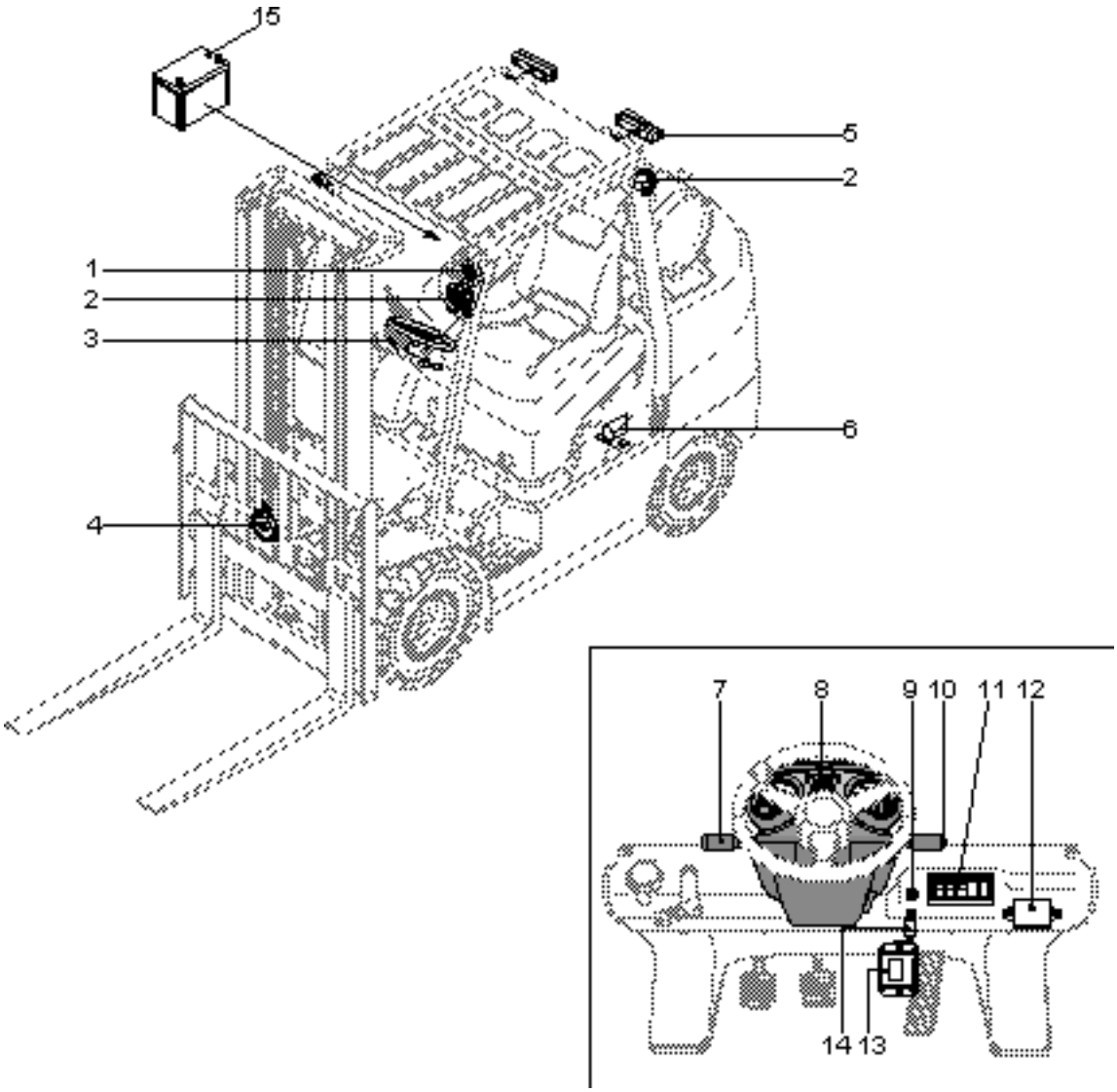

20L7EL02

1	Flasher lamp	6	Back buzzer	11	Switch assembly
2	Work lamp	7	Forward-reverse lever	12	Fuse box
3	Combination switch	8	Operating panel	13	OPSS unit
4	Horn assembly	9	Start switch	14	Flasher unit
5	Combination lamp	10	Horn button	15	Battery

https://www.forkliftpdfmanuals.com/

GROUP 1 COMPONENT LOCATION

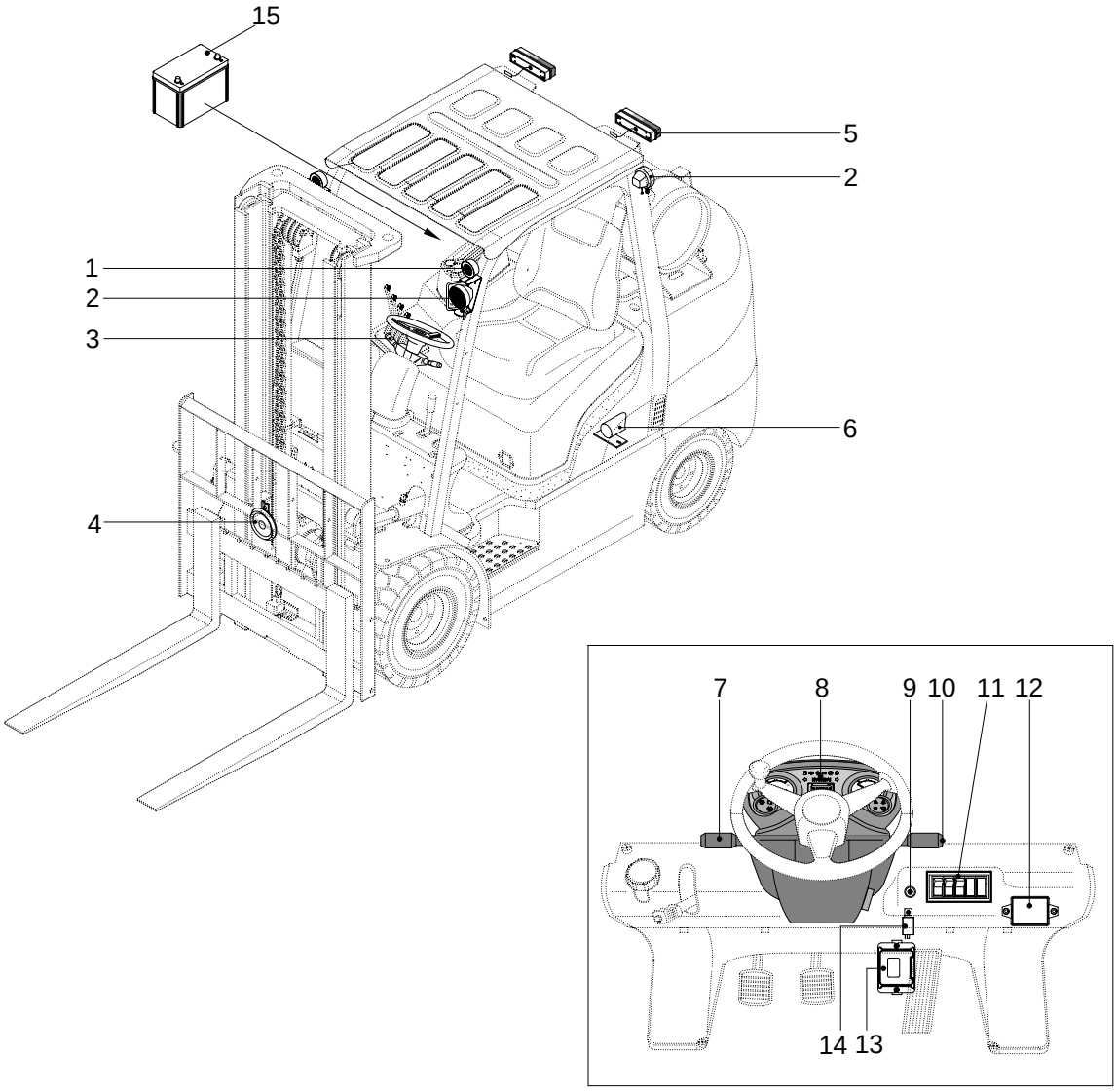

20L7EL02

1	Flasher lamp	6	Back buzzer	11	Switch assembly
2	Work lamp	7	Forward-reverse lever	12	Fuse box
3	Combination switch	8	Operating panel	13	OPSS unit
4	Horn assembly	9	Start switch	14	Flasher unit
5	Combination lamp	10	Horn button	15	Battery

https://www.forkliftpdfmanuals.com/

GROUP 2 ELECTRICAL CIRCUIT

DASHBOARD PART

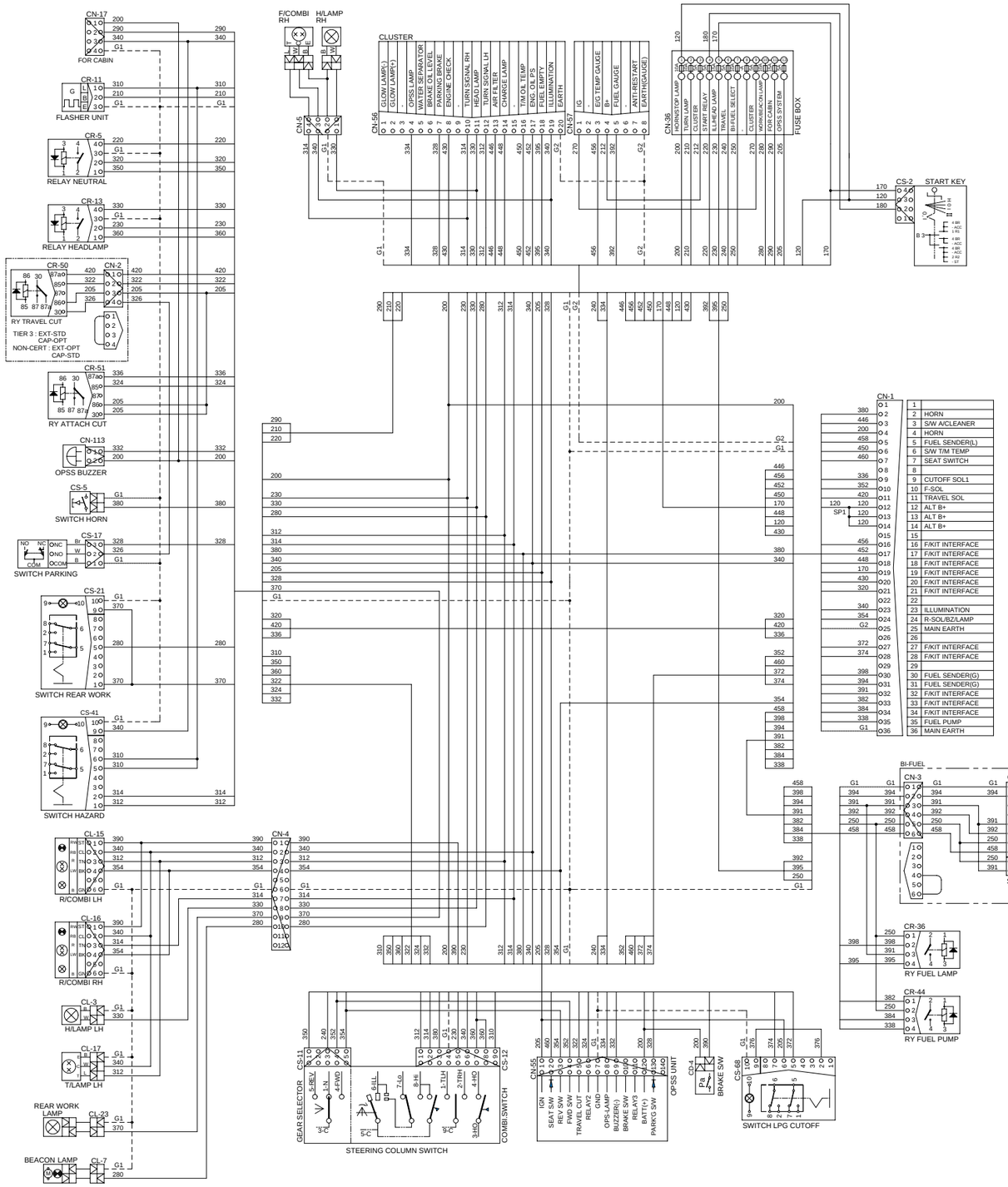

FRAME / ENGINE PART

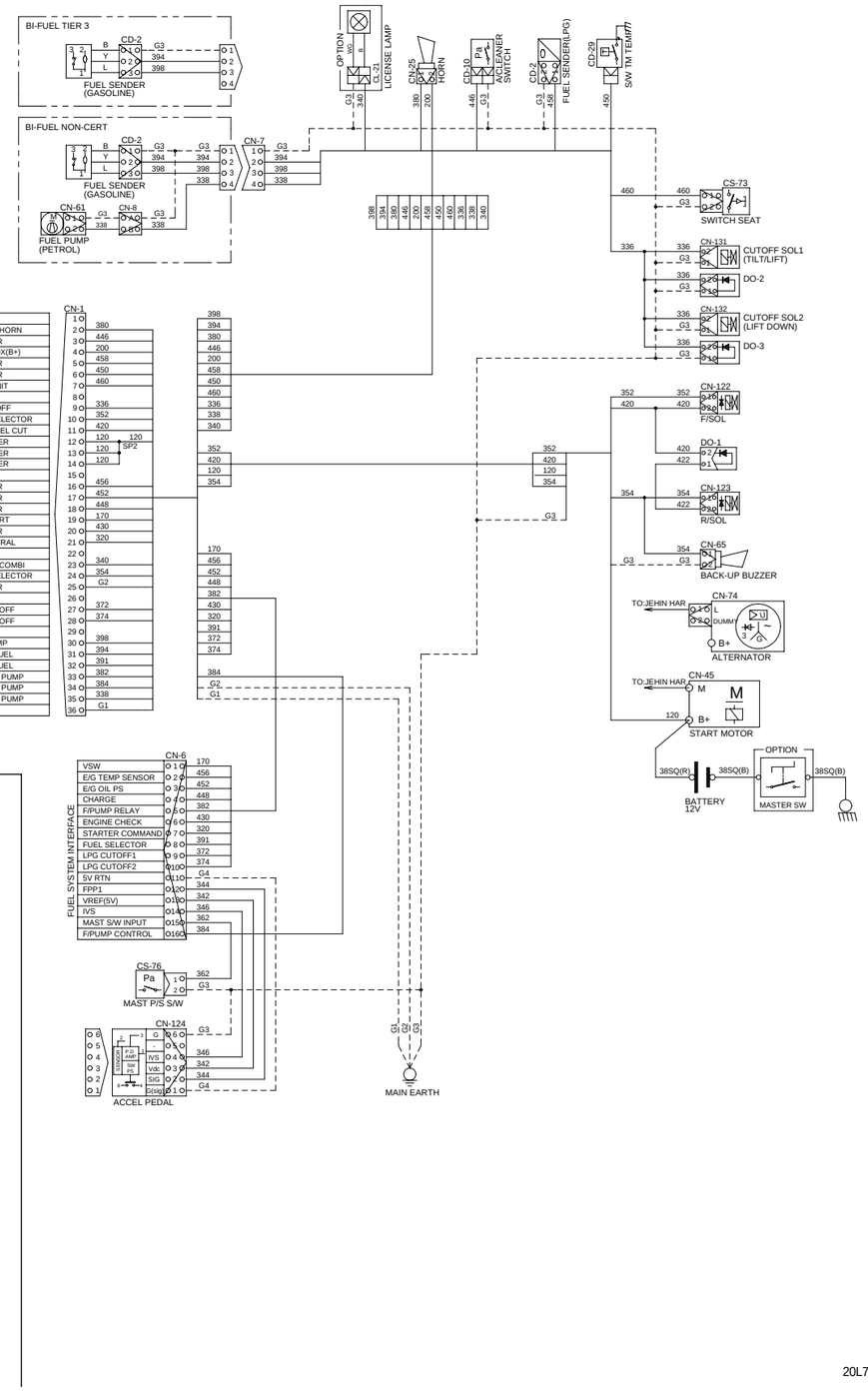

20L7EL01

https://www.forkliftpdfmanuals.com/

FUEL SYSTEM CIRCUIT(TIER 3, LPG)

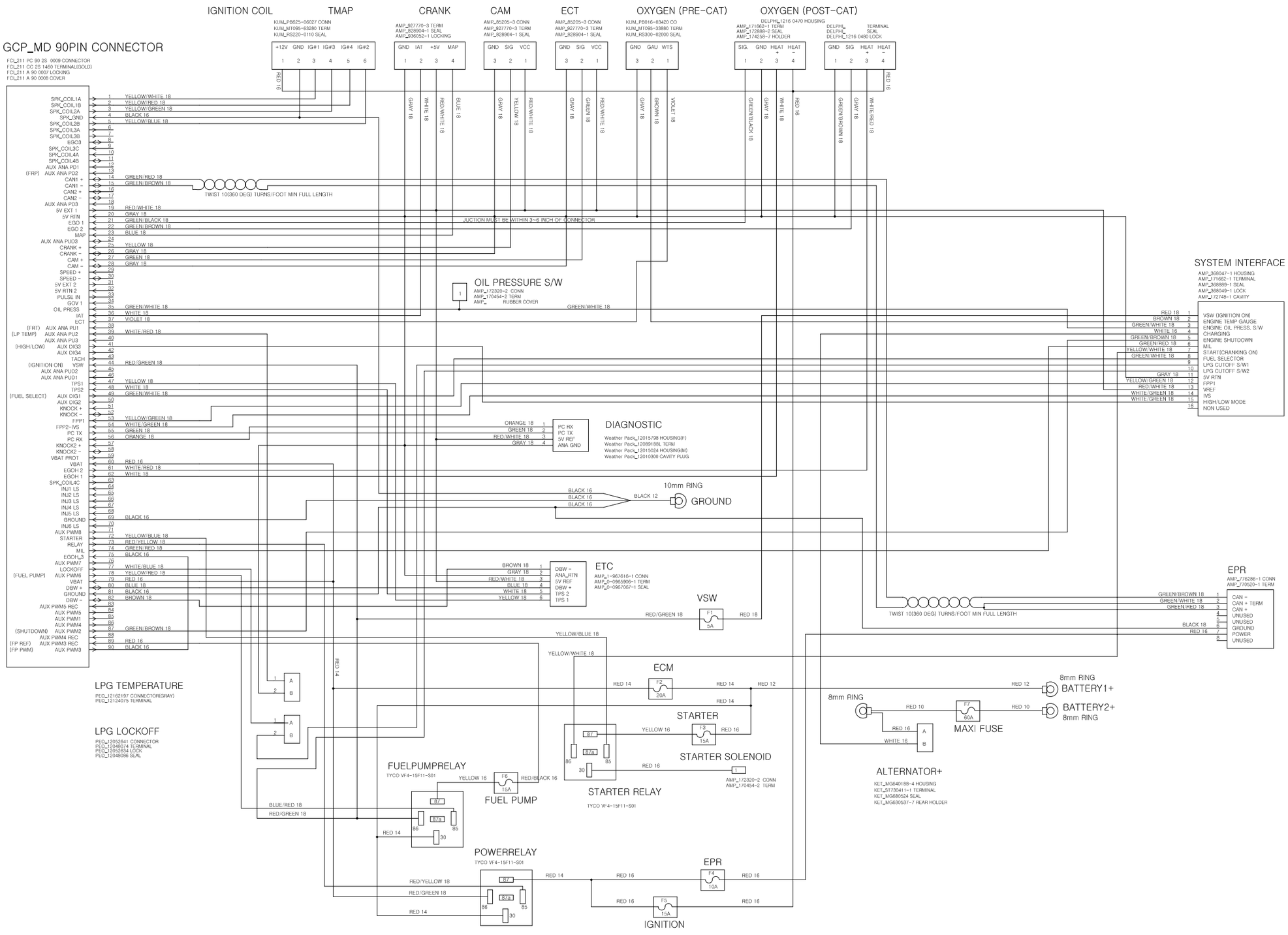

https://www.forkliftpdfmanuals.com/

FUEL SYSTEM CIRCUIT(TIER 3, BI-FUEL)

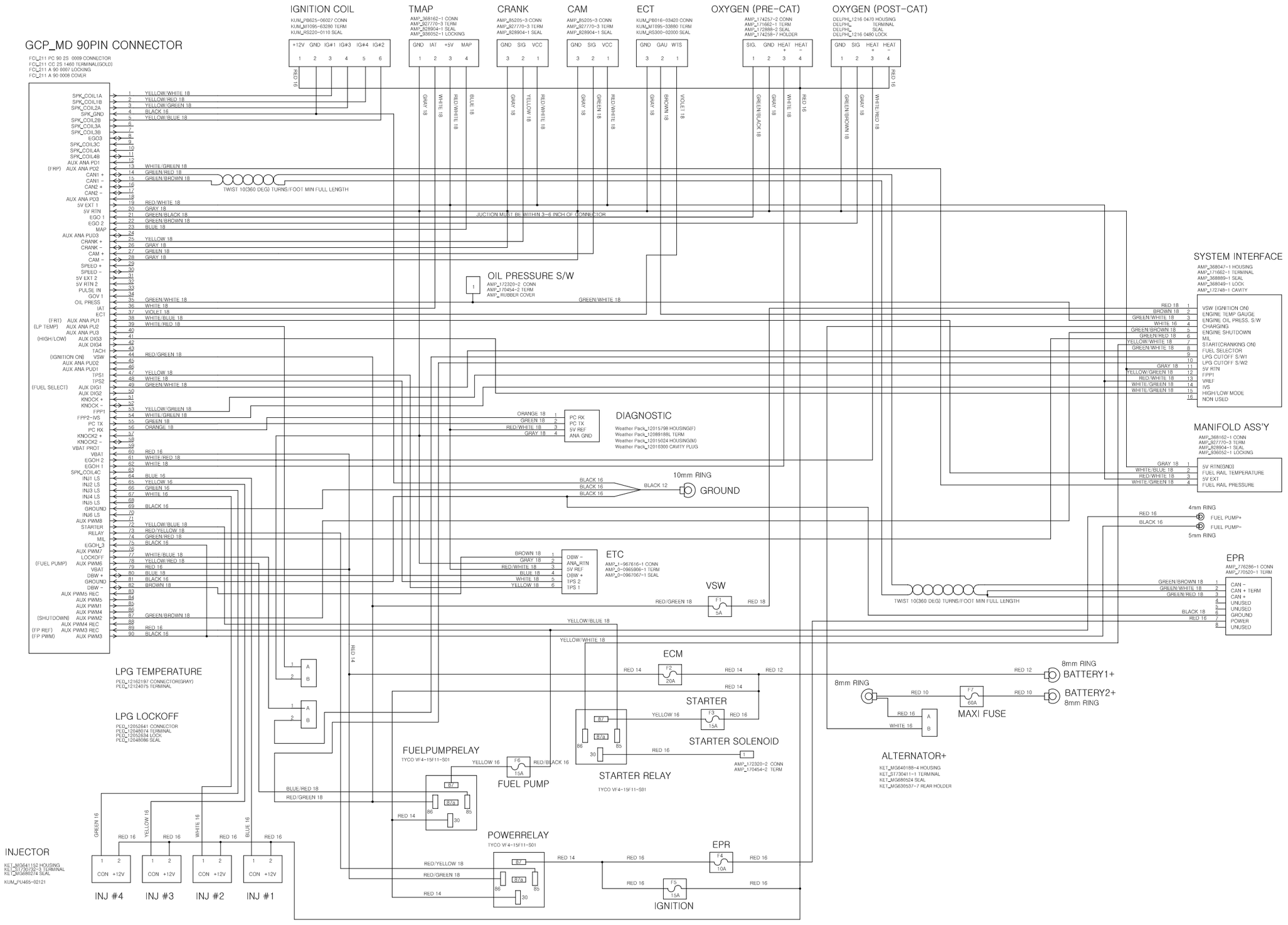

https://www.forkliftpdfmanuals.com/

FUEL SYSTEM CIRCUIT(NON-CERT, LPG)

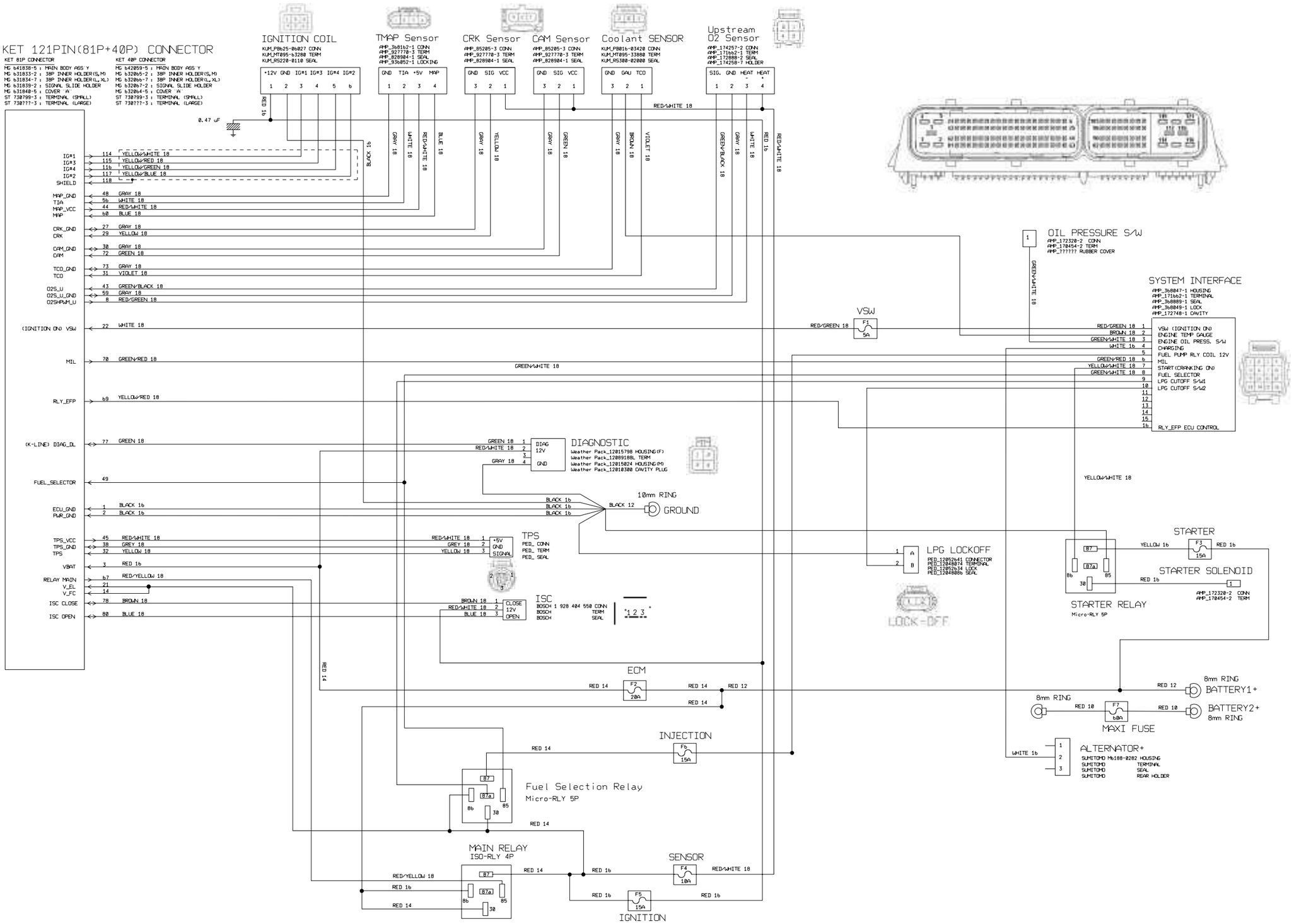

https://www.forkliftpdfmanuals.com/

FUEL SYSTEM CIRCUIT(NON-CERT, BI-FUEL)

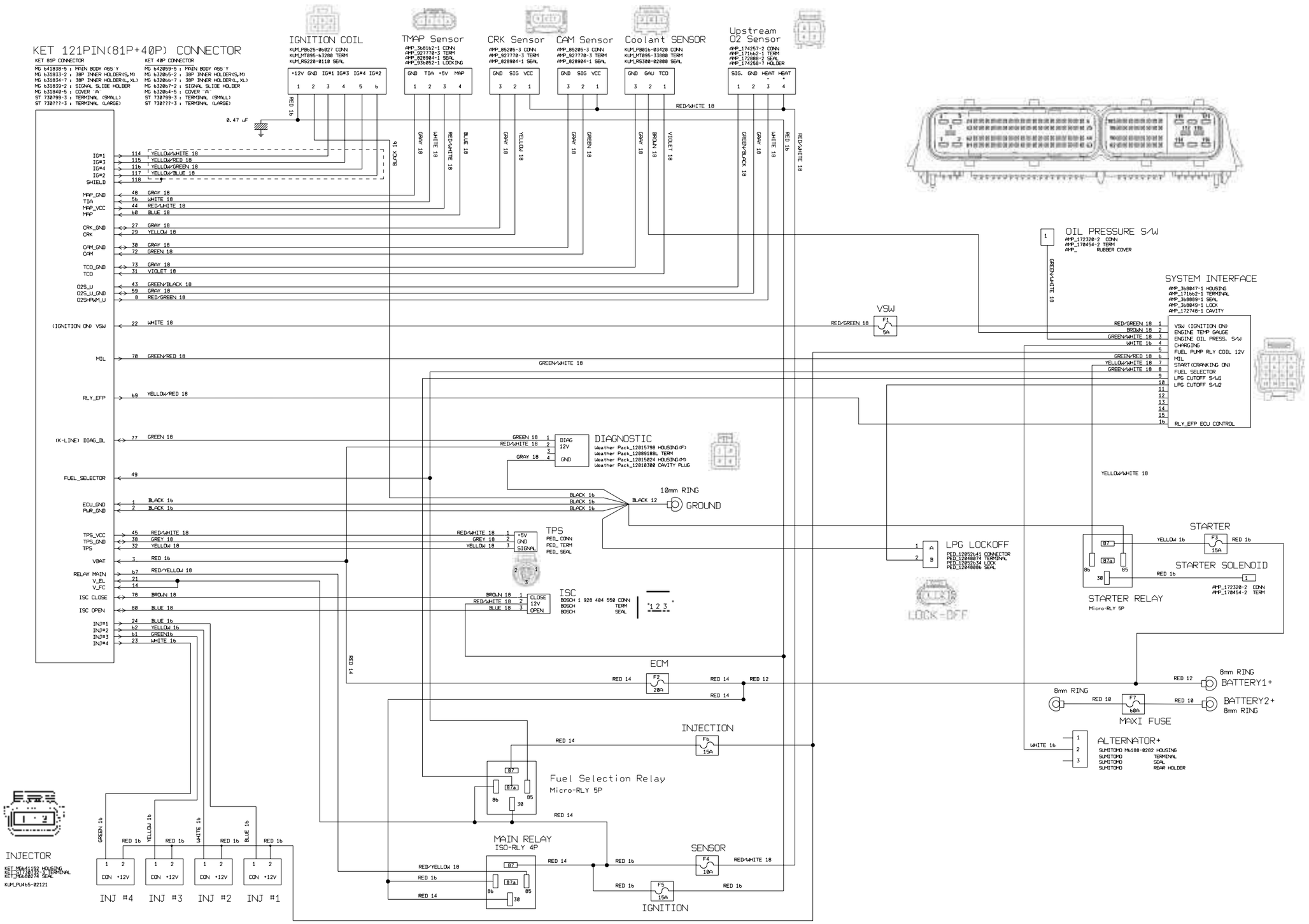

https://www.forkliftpdfmanuals.com/

MEMORANDUM

https://www.forkliftpdfmanuals.com/

1. POWER CIRCUIT

The negative terminal of the battery is grounded to the machine chassis.
When the start switch is in the OFF position, the current flows from the positive battery terminal.

1) OPERATING FLOW

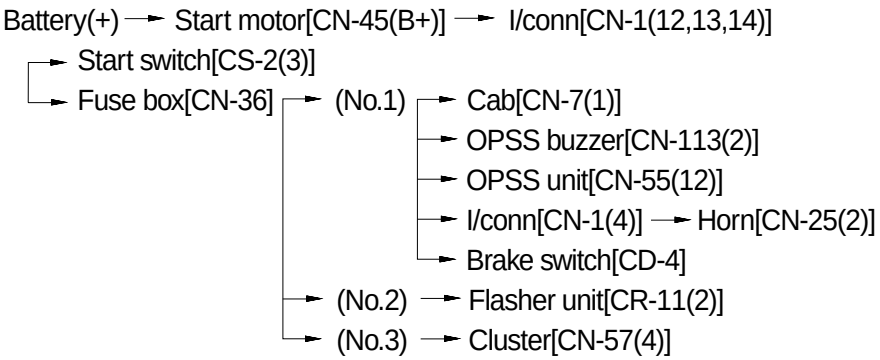

2) CHECK POINT

Engine	Key switch	Check point	Voltage
OFF	OFF	① - GND (Battery(+)) ② - GND (Fuse No.1) ③ - GND (Start key)	10 ~ 13V

https://www.forkliftpdfmanuals.com/

POWER CIRCUIT

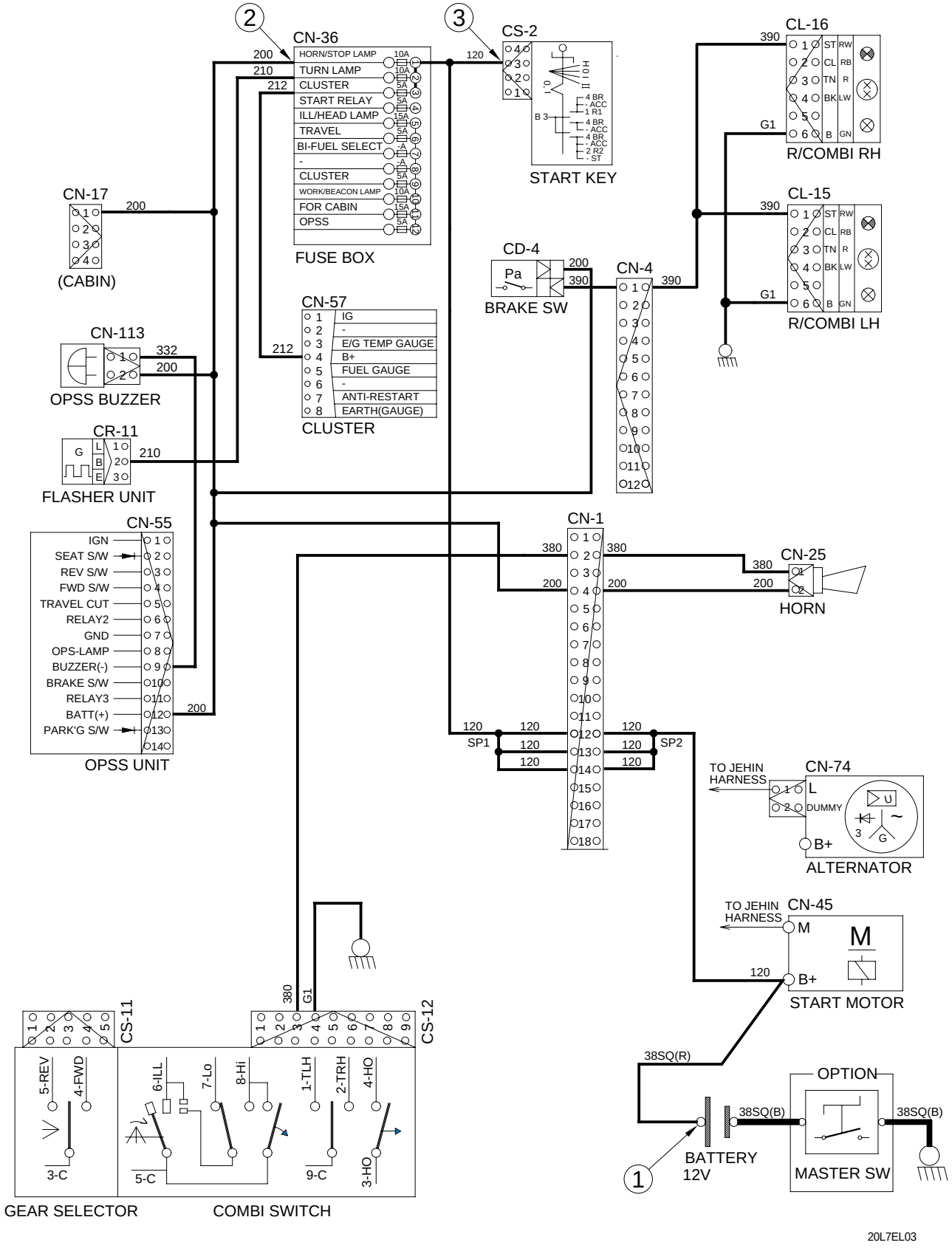

https://www.forkliftpdfmanuals.com/

2. STARTING CIRCUIT

1) OPERATING FLOW

Battery(+) terminal → Start motor[CN-45(B+)] → I/conn[CN-1(12,13,14)] → Start switch[CS-2(3)]

※ **The engine can be started only when the gearshift is in neutral position.**

(1) When start key switch is in ON position

Start switch ON [CS-2(4)] → Fuse box[No. 5]
→ I/conn[CN-1(19)] → Fuel system interface[CN-6(1)]

(2) When start key switch is START position

Start switch START[CS-2(2)] → Fuse box[CN-36(4)] → Neutral relay[CR-5(4→2)]
→ I/conn[CN-1(21)] → Fuel system interface[CN-6(7)]

2) CHECK POINT

Engine	Key switch	Check point	Voltage
Running	ON	① - GND (Battery B+) ② - GND (Fuse box No.5) ③ - GND (Start key) ④ - GND (Neutral relay)	10 ~ 14.5V

https://www.forkliftpdfmanuals.com/

STARTING CIRCUIT

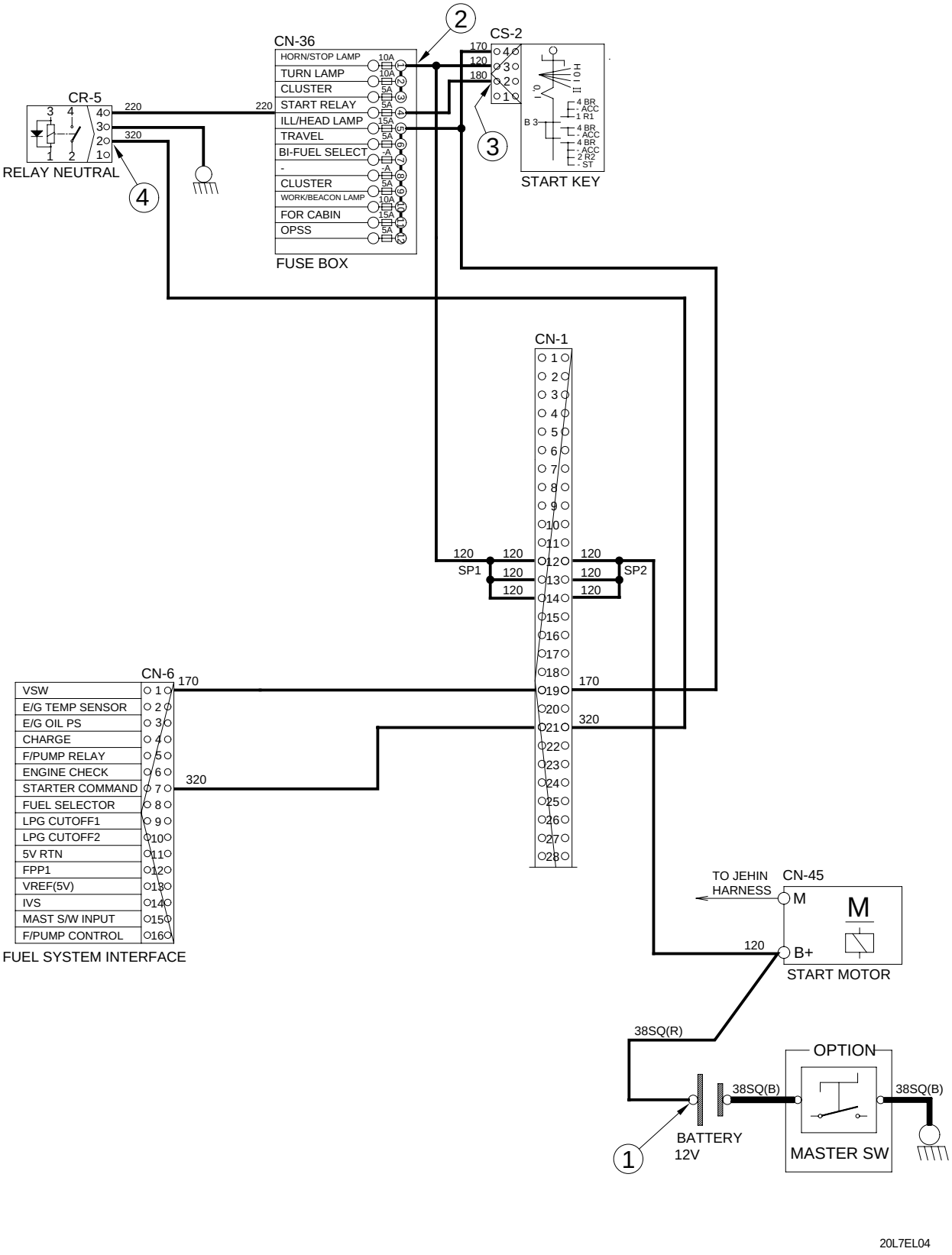

https://www.forkliftpdfmanuals.com/

GROUP 3 COMPONENT SPECIFICATION

No	Part name	Qty	Specification	Remark
1	Battery	1	CCA : 550 20HR : 60AH CMF 60(223×168×220)	
2	Working lamp	1	12V, 55W	
3	License lamp	1	12V, 3.4W×2	
4	Combination lamp	2	12V, 21W(T/S) 12V, 10W(Back) 12V, 5W (Tail) 12V, 21W(Stop)	
5	Head lamp	2	12V, 55W	
6	Flasher lamp	2	85±10 C/M, (23W+23W)×2+3W×2	
7	Flasher & Relay	1	12V, 20A (Relay) 12V, (21W+21W)×2+3W(Flasher) 130W (Harzard)	
8	Back horn	1	12V, 90±5dB, 60±10C/M	
9	Horn	1	12V, MAX 3.5A, 105~120dB	
10	Master switch	1	180A	
11	Combination switch	1	12V, 16A	
12	Hazard switch	1	12V, 16A	
13	Start switch	1	12V/24V, 15~28A	
14	OPSS unit	1	12V/24V, MAX 0.5A(at 12V)	
15	Relay(4P)	2	12V, 20A	
16	Relay(5P)	2	12V, 20A	

https://www.forkliftpdfmanuals.com/

GROUP 4 CONNECTOR DESTINATION

Connector number	Type	No. of pin	Destination	Connector part No.	
				Female	Male
CN-1	AMP	36	I/conn(Dashboard harness-frame harness)	1743059-2	1743062-2
CN-2	KET	4	I/conn (Dashboard harness-travel ext harness)	MG610331	MG640329
CN-4	KET	12	I/conn (Dashboard harness-head guard harness)	MG640348	MG610346
CN-5	KET	4	Support harness-RH	S810-004201	-
CN-6	AMP	16	Fuel system interface connection	-	368050-1
CN-17	KET	4	Power output for cabin	S810-004201	-
CN-25	MOLEX	2	Horn	35825-0211	-
CN-36	-	-	Fuse box	21HF-10500	-
CN-45	RING TERM	-	Start motor	-	-
CN-48	KET	2	Hour meter	S822-014000	S822-114000
CN-55	KET	14	OPSS unit	S814-014100	-
CN-56	AMP	20	Cluster	368511-2	-
CN-65	KET	2	Back buzzer	MG640322	-
CN-113	KET	2	OPSS buzzer	S814-002100	-
CN-122	DEUTSCH	2	Forward solenoid	DT03-2S	-
CN-123	DEUTSCH	2	Reverse solenoid	DT03-2S	-
CN-124	AMP	6	Accel pedal	174262-2	-
Switch					-
CS-2	KET	4	Start switch	S810-004201	-
CS-11	AMP	5	Gear selector switch	172494-1	-
CS-12	AMP	9	Combination switch	S811-009002	-
CS-17	KET	3	Parking switch	S810-003201	-
CS-21	SWF	10	Rear work switch	593757	-
CS-41	SWF	10	Hazard switch	593757	-
CS-68	SWF	10	Cut off switch	593757	-
CS-73	KET	2	Seat switch	MG610043	-
Lamp					
CL-3	KET	2	Head lamp	S822-014000	S822-114000
CL-7	KET	2	Beacon lamp	S822-014000	S822-114000
CL-15	DAEDONG	6	Combination lamp-LH	110-6PR	-
CL-16	DAEDONG	6	Combination lamp-RH	110-6PR	-
CL-23	KET	2	Rear working lamp	S822-014000	S822-114000
Relay					
CR-5	KET	4	Neutral relay	S810-004201	-
CR-11	KET	3	Flasher unit	S810-003702	-
CR-13	KET	4	Head lamp relay	S810-004201	-
CR-35	AMP	4	Warning relay	S810-004202	-
CR-36	KET	4	Fuel lamp relay	S810-004201	-
CR-51	KET	5	Attach cut relay	MG640927	-

https://www.forkliftpdfmanuals.com/

Connector number	Type	No. of pin	Destination	Connector part No.	
				Female	Male
Sensor and pressure switch					
CD-2	KET	2	Fuel level sensor	MG610043	-
CD-4	DEUTSCH	2	Brake switch	-	DT04-2P-E005
CD-10	KET	2	Air cleaner switch	ST730057-2	-
CD-29	AMP	1	T/M temp switch	172320-2	-

https://www.forkliftpdfmanuals.com/

GROUP 5 TROUBLESHOOTING

Trouble symptom	Probable cause	Remedy
Lamps dimming even at maximum engine speed.	· Faulty wiring.	· Check for loose terminal and disconnected wire.
Lamps flicker during engine operation.	· Improper belt tension.	· Adjust belt tension.
Charge lamp does not light during normal engine operation.	· Charge lamp defective. · Faulty wiring.	· Replace. · Check and repair.
Alternator makes abnormal sounds.	· Alternator defective.	· Replace
Starting motor fails to run.	· Faulty wiring. · Insufficient battery voltage.	· Check and repair. · Recharge battery.
Starting motor pinion repeats going in and out.	· Insufficient battery voltage.	· Recharge battery.
Excessively low starting motor speed.	· Insufficient battery voltage. · Starting motor defective.	· Recharge battery. · Replace
Starting motor comes to a stop before engine starts up.	· Faulty wiring. · Insufficient battery voltage.	· Check and repair. · Recharge battery.
Heater signal does not become red.	· Faulty wiring. · Glow plug damaged.	· Check and repair. · Replace
Engine oil pressure caution lamp does not light when engine is stopped (with starting switch left in"ON" position).	· Caution lamp defective. · Caution lamp switch defective.	· Replace · Replace

https://www.forkliftpdfmanuals.com/

SECTION 8 MAST

Group 1 Structure ····· 8-1
Group 2 Operational Checks and Troubleshooting ····· 8-5
Group 3 Adjustment ····· 8-8
Group 4 Removal and Installation ····· 8-11

https://www.forkliftpdfmanuals.com/

GROUP 1 STRUCTURE

1. 2 STAGE MAST(V MAST)

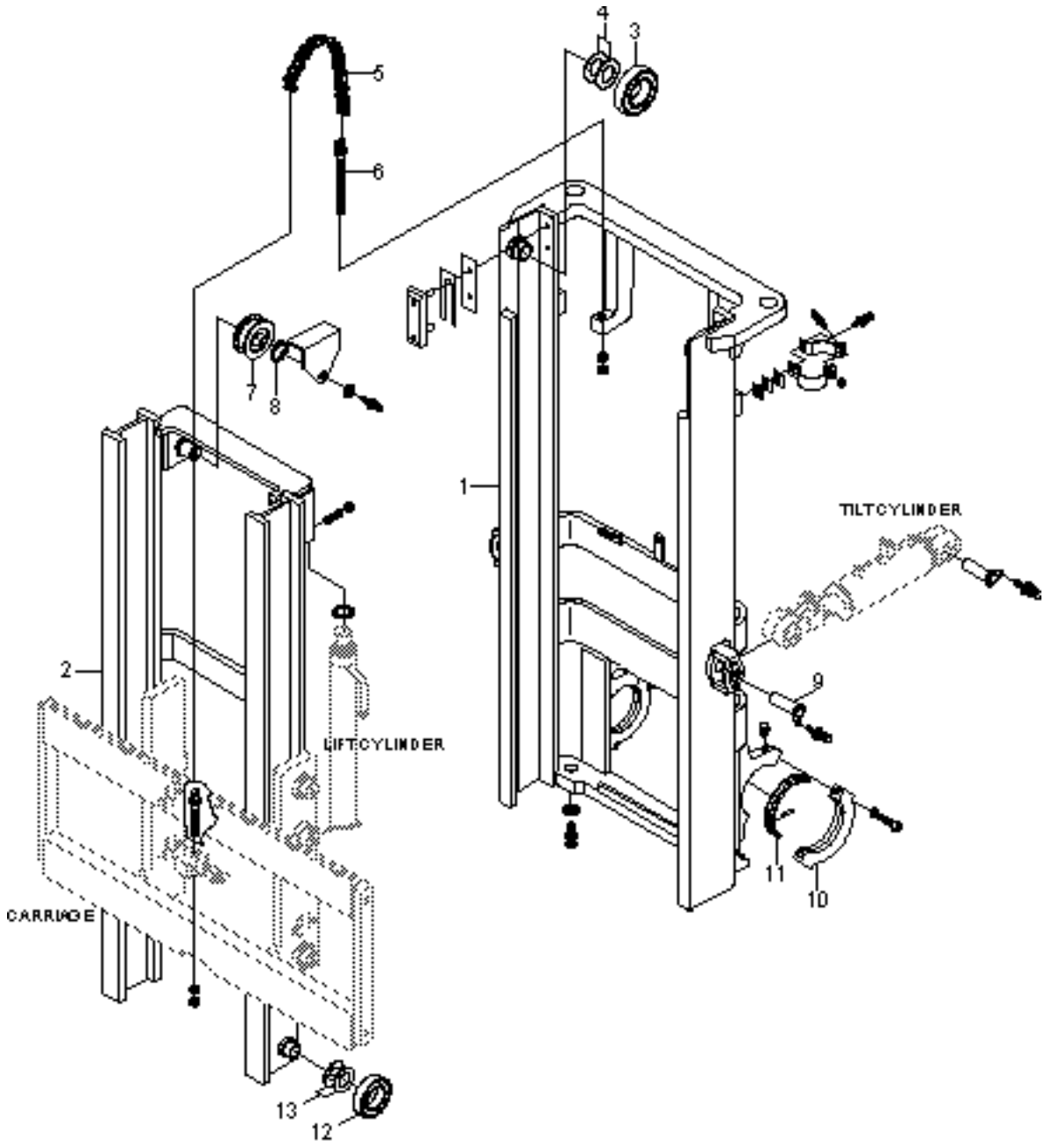

1	Outer mast	6	Anchor bolt	10	Trunnion cap
2	Inner mast	7	Chain wheel bearing	11	Bushing
3	Roller	8	Retaining ring	12	Roller
4	Shim(0.5, 1.0t)	9	Tilt cylinder pin	13	Shim(0.5, 1.0t)
5	Chain				

https://www.forkliftpdfmanuals.com/

GROUP 1 STRUCTURE

1. 2 STAGE MAST(V MAST)

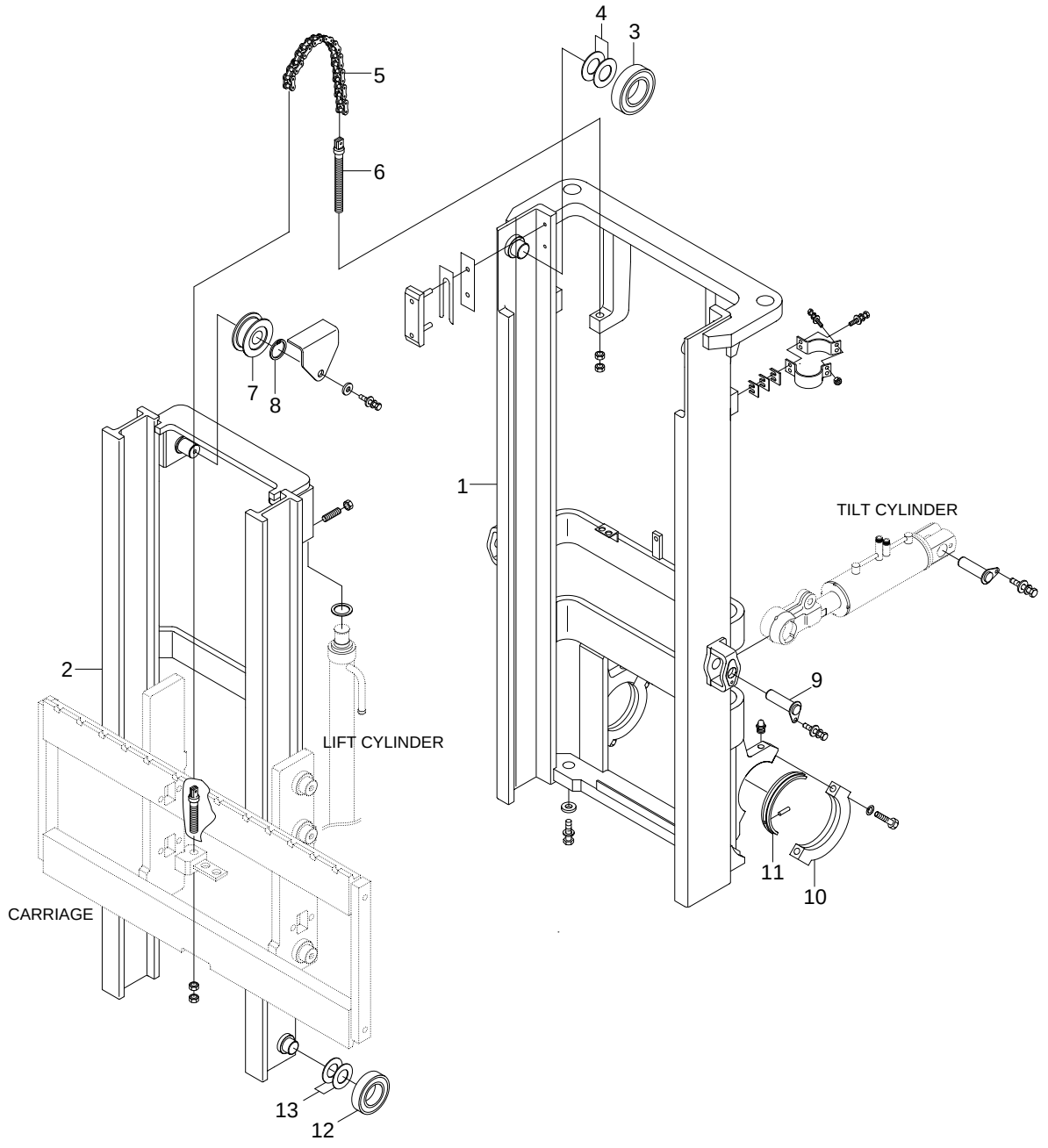

1	Outer mast	6	Anchor bolt	10	Trunnion cap
2	Inner mast	7	Chain wheel bearing	11	Bushing
3	Roller	8	Retaining ring	12	Roller
4	Shim(0.5, 1.0t)	9	Tilt cylinder pin	13	Shim(0.5, 1.0t)
5	Chain				

https://www.forkliftpdfmanuals.com/

2. 2 STAGE MAST(VF MAST)

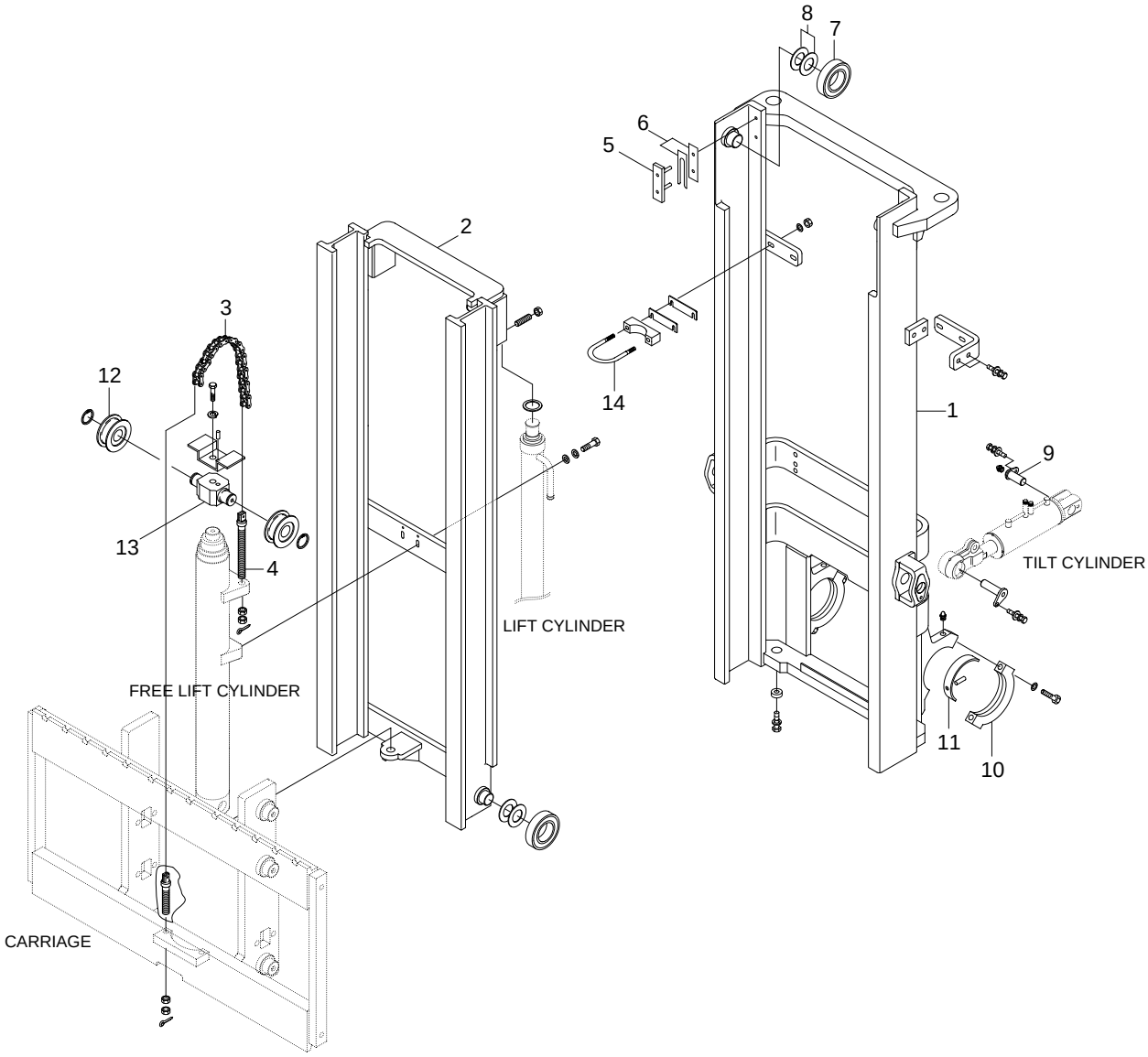

1	Outer mast	6	Shim(0.5, 1.0t)	11	Bushing
2	Inner mast	7	Roller	12	Sheave
3	Chain	8	Shim(0.5, 1.0t)	13	Sheave bracket
4	Anchor bolt	9	Tilt cylinder pin	14	U-bolt
5	Back up liner	10	Support cap		

https://www.forkliftpdfmanuals.com/

3. 3 STAGE MAST(TF MAST)

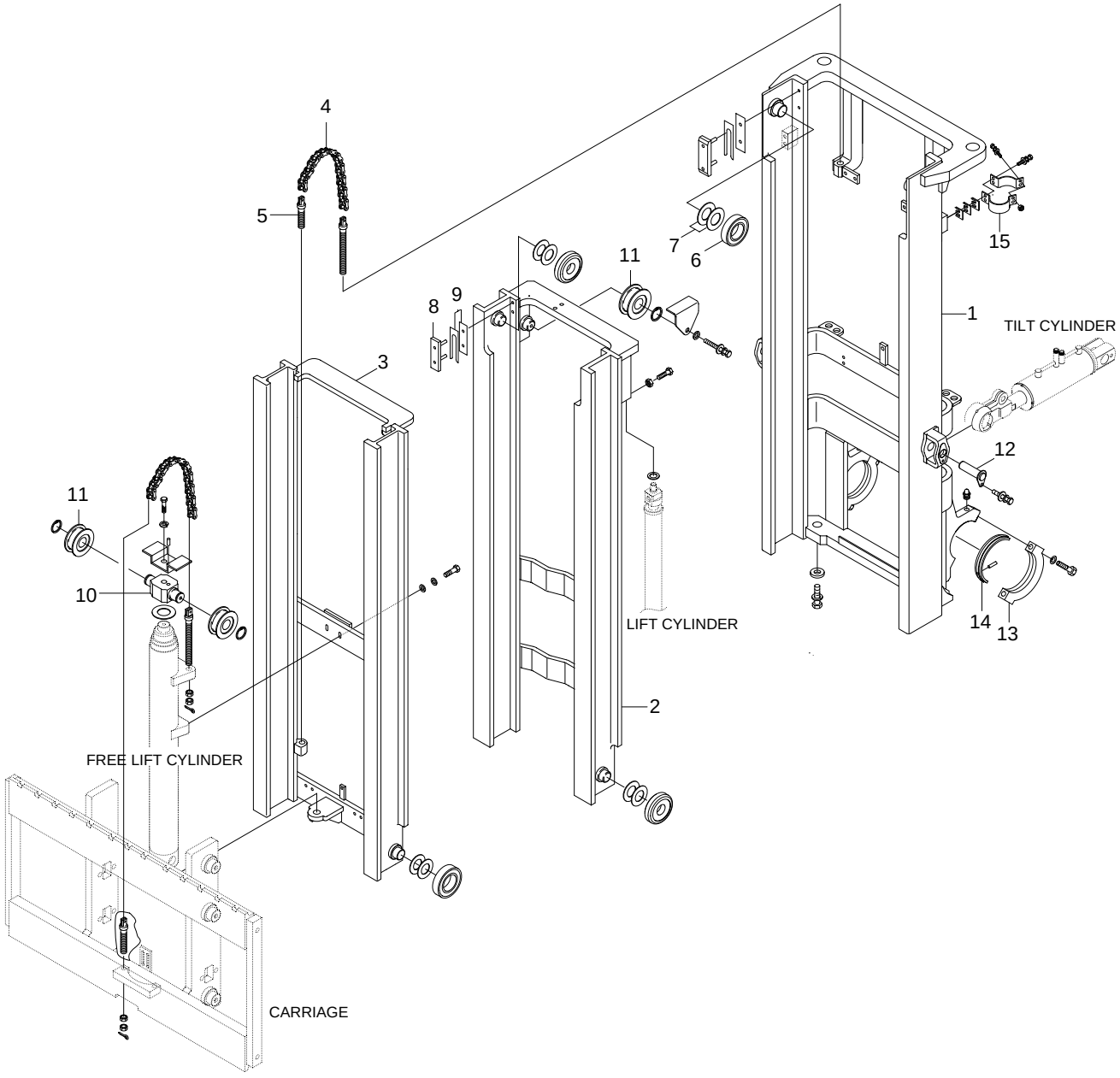

1	Outer mast	6	Roller	11	Sheave
2	Middle mast	7	Shim(0.5, 1.0t)	12	Tilt cylinder pin
3	Inner mast	8	Back up liner	13	Support cap
4	Chain	9	Shim(0.5, 1.0t)	14	Bushing
5	Anchor bolt	10	Sheave bracket	15	Clamp

https://www.forkliftpdfmanuals.com/

4. CARRIAGE, BACKREST AND FORK

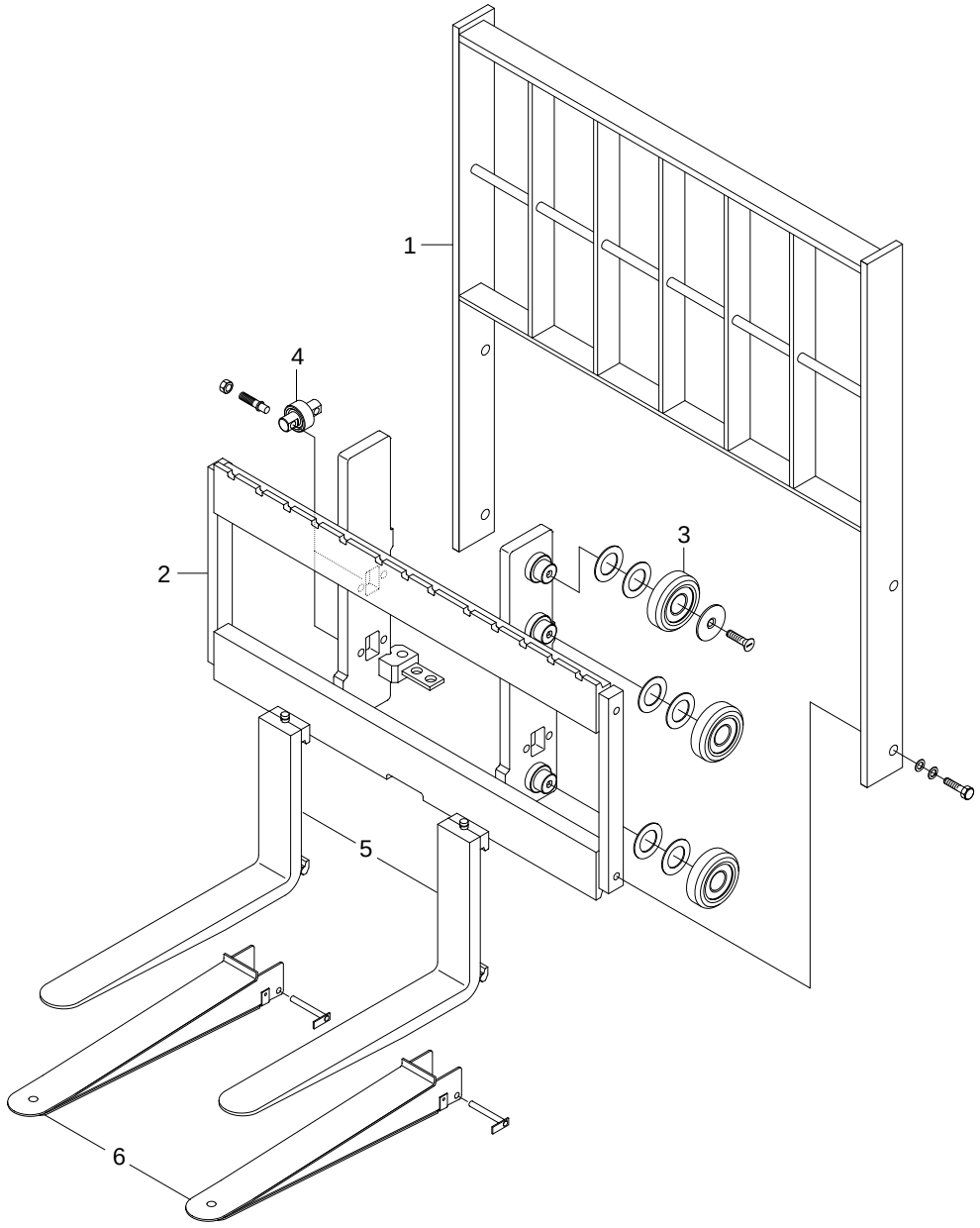

D255MS03

1	Backrest	3	Load roller	5	Fork assembly
2	Carriage	4	Side roller	6	Extension fork

https://www.forkliftpdfmanuals.com/

GROUP 2 OPERATIONAL CHECKS AND TROUBLESHOOTING

1. OPERATIONAL CHECKS

1) FORKS

(1) Measure thickness of root of forks and check that it is more than specified value.
EX : ℓ =1050mm(41.3in)

mm(in)

STD Fork assy	Applicable model	Standard	Limit
F173796-02	20L(C)/25L(C)-7 20G(C)/25G(C)-7	45(1.8)	40(1.6)
64FG-31020	30L(C)-7, 30G(C)-7	45(1.8)	40(1.6)

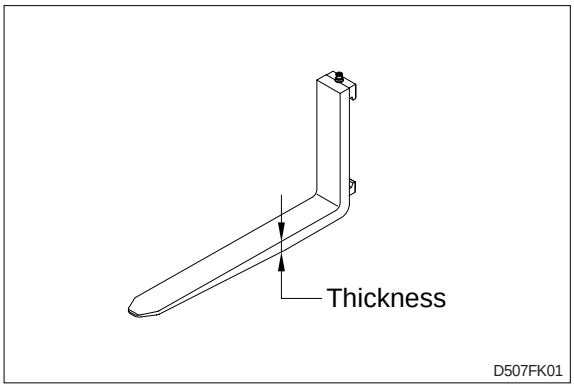

(2) Set forks in middle and measure difference in height at top of forks.

Model	Fork length (mm)	Height difference(mm)
20L(C)/25L(C)-7 20G(C)/25G(C)-7	900~1800	3
30L(C)-7 30G(C)-7	900~1150	3
	1150~1800	6

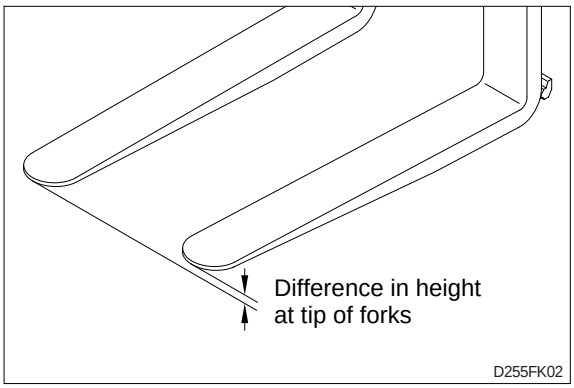

(3) Most force is concentrated at root of fork and at hook, so use crack detection method to check cracks.

2. MAST

1) Check for cracks at mast stay, tilt cylinder bracket, guide bar, fork carriage and roller shaft weld. Check visually or use crack detection method. Repair any abnormality.
2) Set mast vertical, raise forks about 10cm from ground and check front-to-rear clearance and left-to-right clearance between inner mast and fork carriage, and between outer mast and inner mast. Use these figures to judge if there is any play at roller or rail.
   - Front-to-rear clearance : Within 2.0mm(0.08in)
   - Left-to-right clearance : Within 2.5mm (0.10in)
3) Check that there is an oil groove in bushing at mast support.
4) Set mast vertical, raise forks about 10cm from ground, and push center of lift chain with finger to check for difference in tension.
   If there is any difference in tension, adjust chain stopper bolt.
5) Check visually for abnormalities at thread of chain anchor bolt, and at contact surface between chain wheel and chain.
   Rotate chain wheel by hand and check for any play of bearing.

https://www.forkliftpdfmanuals.com/

2. TROUBLESHOOTING

1) MAST

Problem	Cause	Remedy
Forks fail to lower.	· Deformed mast or carriage.	· Disassemble, repair or replace.
Fork fails to elevate	· Faulty hydraulic equipment.	· See troubleshooting hydraulic pump and cylinders in section 6, hydraulic system.
	· Deformed mast assembly.	· Disassemble mast and replace damaged parts or replace complete mast assembly.
Slow lifting speed and insufficient handling capacity.	· Faulty hydraulic equipment.	· See troubleshooting hydraulic pump and cylinders in section 6, hydraulic system.
	· Deformed mast assembly.	· Disassemble mast and replace damaged parts or replace complete mast assembly.
Mast fails to lift smoothly.	· Deformed masts or carriage.	· Disassembly, repair or replace.
	· Faulty hydraulic equipment.	· See Troubleshooting Hydraulic Cylinders, pump and control valve in section 6, hydraulic system.
	· Damaged load and side rollers.	· Replace.
	· Unequal chain tension between LH & RH sides.	· Adjust chains.
	· LH & RH mast inclination angles are unequal. (Mast assembly is twisted when tilted)	· Adjust tilt cylinder rods.
Abnormal noise is produced when mast is lifted and lowered.	· Broken load roller bearings.	· Replace.
	· Broken side roller bearings.	· Replace.
	· Deformed masts.	· Disassemble, repair or replace.
	· Bent lift cylinder rod.	· Replace.
	· Deformed carriage.	· Replace.
	· Broken sheave bearing.	· Replace.
Abnormal noise is produced during tilting operation.	· Insufficient lubrication of anchor pin, or worn bushing and pin.	· Lubricate or replace.
	· Bent tilt cylinder rod.	· Replace.

https://www.forkliftpdfmanuals.com/

2) FORKS

Problem	Cause	Remedy
Abrasion	Long-time operations causes the fork to wear and reduces the thickness of the fork. Inspection for thickness is needed. ・Wear limit : Must be 90% of fork thickness	If the measured value is below the wear limit, replace fork.
Distortion	Forks are bent out of shape by a number of reasons such as overloading, glancing blows against walls and objects, and picking up load unevenly. ・Difference in fork tip height : 15㎜ ・Difference in fork tip width : 35㎜	If the measured value exceeds the allowance, replace fork.
Fatigue	Fatigue failure may result from the fatigue crack even though the stress to fork is below the static strength of the fork. Therefore, a daily inspection should be done. ・Crack on the fork heel. ・Crack on the fork weldments.	Repair fork by expert. In case of excessive distortion, replace fork.

https://www.forkliftpdfmanuals.com/

1. MAST LOAD ROLLER(V, VF MAST)

1) INNER/OUTER MAST ROLLER CLEARANCE ADJUSTMENT

(1) Measure the clearance with the mast overlap at near 480mm.

(2) Shift the inner mast to one side to bring the roller into contact with the outer mast, and adjust the clearance between the roller side face and mast at the closest position on the opposite side to the following value by inserting the inner/outer mast roller shim.

- Standard clearance A, B = 0~0.6mm
- Shim thickness 0.5, 1.0mm

(3) Distribute the shim thickness equally to the left and right roller. Refer to Mast load roller and back up liner, removal and Installation.

(4) After the adjustment, check that the inner mast moves smoothly in the outer mast.

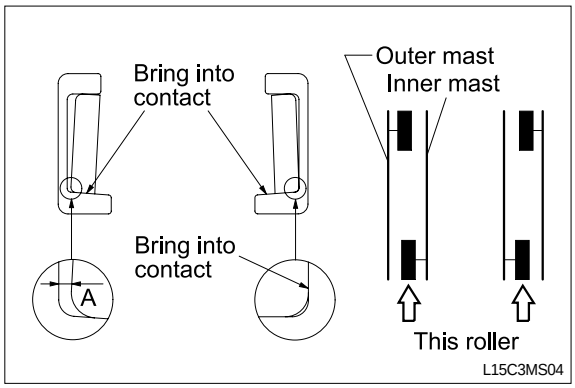

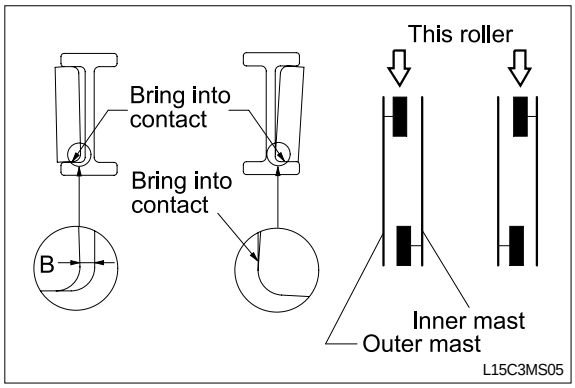

https://www.forkliftpdfmanuals.com/

2. MAST LOAD ROLLER(TF MAST)

1) INNER AND MIDDLE MAST ROLLER CLEARANCE ADJUSTMENT

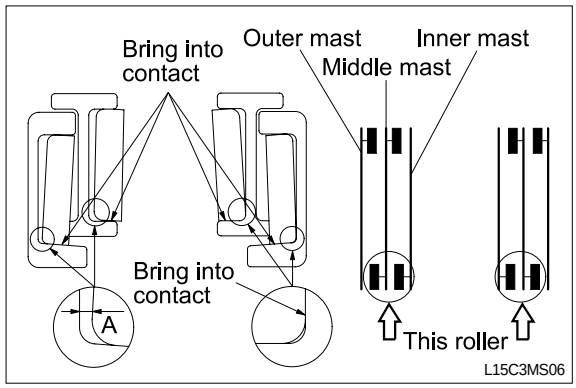

(1) Measure the clearance with the mast overlap at near 480mm.

(2) Shift the inner mast to one side to bring the roller into contact with the outer mast and the middle mast, and adjust the clearance between the roller side face and mast at the closest position on the opposite side to the following value by inserting the inner and middle mast roller shim, respectively.

- Standard clearance A = 0~0.6mm
- Shim thickness 0.5, 1.0mm

(3) Distribute the shim thickness equally to the left and right roller. Refer to Mast load roller and back up liner, removal and Installation.

(4) After the adjustment, check that the inner mast moves smoothly in the middle mast, and the middle mast moves smoothly in the outer mast.

2) OUTER AND MIDDLE MAST UPPER ROLLER CLEARANCE ADJUSTMENT.

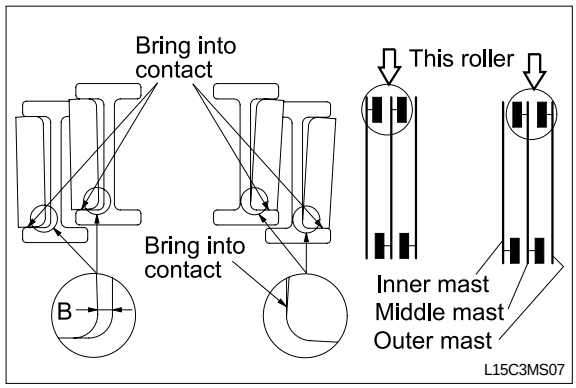

(1) Measure the clearance with the mast overlap at near 480mm.

(2) Shift the inner mast to one side to bring the roller into contact with the outer mast and the middle mast, and adjust the clearance between the roller side face and mast at the closest position on the opposite side to the following value by inserting the outer and middle mast roller shim, respectively.

- Standard clearance B = 0~0.6mm
- Shim thickness 0.5, 1.0mm

(3) Distribute the shim thickness equally to the left and right roller. Refer to Mast load roller and back up liner, removal and installation.

(4) After the adjustment, check that the inner mast moves smoothly in the middle mast, and the middle mast moves smoothly in the outer mast.

https://www.forkliftpdfmanuals.com/

3) CARRIAGE LOAD ROLLER

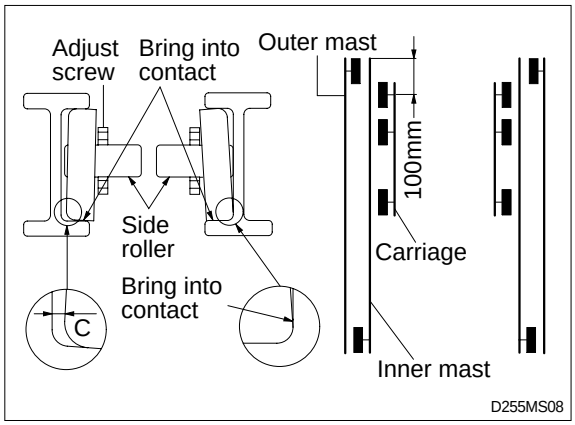

(1) Measure the clearance when the center of the carriage upper roller is 100㎜ from the top of the inner mast.

(2) Measure the clearance at upper, middle and lower rollers after loosen the adjust screws from the side rollers. Shift the carriage to one side to bring the roller into contact with the inner mast, and measure the clearance between the roller side face and mast at the closest position on the opposite side to the following value by inserting the carriage roller shim.

- Standard clearance C = 0~0.6㎜
- Shim thickness 0.5, 1.0㎜

(3) Distribute the shim thickness equally to the left and right roller. Refer to Carriage assembly.

(4) After the adjustment, the carriage should move smoothly along the overall mast length.

4) MAST BACK UP LINER

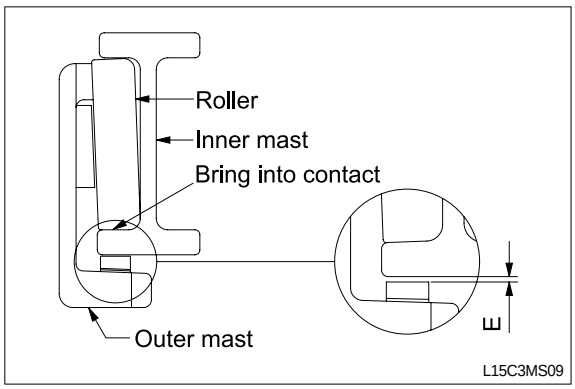

(1) Measure the clearance with the middle mast at the bottom position.

(2) With the middle mast in contact with the outer mast roller, adjust the clearance between the mast back up liner and middle mast to the following value by inserting the back up liner shim.

- Standard clearance E = 0.2 ~ 0.6㎜
- Shim thickness 0.5, 1.0㎜

(3) After the adjustment, the mast should move smoothly.

https://www.forkliftpdfmanuals.com/

GROUP 4 REMOVAL AND INSTALLATION

1. FORKS

1) Lower the fork carriage until the forks are approximately 25mm(1inch) from the floor.
2) Turn knob up and slide forks, one by one, toward the center of the carriage where a notch has been cut in the bottom plate for easy fork removal.
3) Remove the fork one by one. On larger forks it may be necessary to use a block of wood.
4) Reverse the above procedure to install load forks.

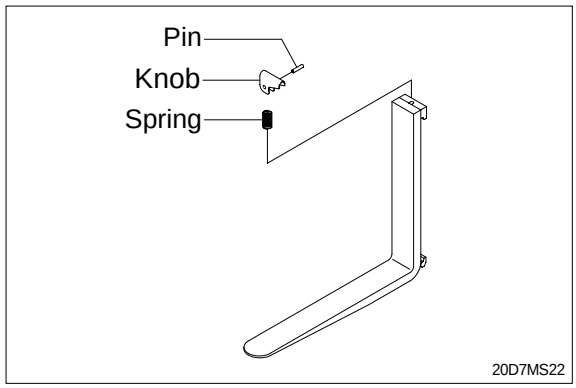

2. BACKREST

1) Remove bolts securing backrest to fork carriage. Lift backrest straight up and remove from carriage.
2) Position backrest on carriage and lower in place. Install and tighten bolts.

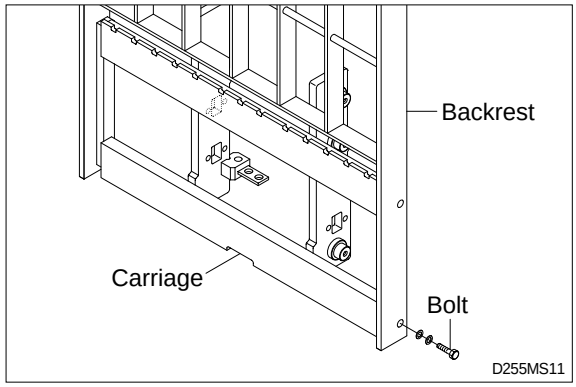

3. CARRIAGE ASSEMBLY

1) CARRIAGE

(1) With the mast vertical, raise the carriage high enough to place blocks under the load forks. This is done to create slack in the load chains when the carriage is lowered. Lower the carriage all the way down to the floor. Make sure the carriage is level, this will prevent any binding when the mast is raised.
(2) While supporting lift chains, remove the split pin and slide out chain anchor pins from the chain anchors of stationary upright.
(3) Pull the chains out of the sheaves and drape them over the front of the carriage.
(4) Slowly raise elevating upright until mast clears top of fork carriage. Move carriage to work area and lower mast.

⚠ **Make sure carriage remains on floor and does not bind while mast is being raised.**

(5) Inspect all parts for wear or damage. Replace all worn or damaged pars.
(6) Reverse the above steps to reinstall.

⚠ **Replace the split pin of chain anchor with new one.**

https://www.forkliftpdfmanuals.com/

2) SIDE ROLLER

(1) Remove carriage as outlined in the carriage assembly and removal paragraph.
(2) Loosen and remove nuts, adjust screws and side rollers from carriage side pate.
(3) Thoroughly clean, inspect and replace all worn or damaged parts.
(4) Reverse the above procedure to assembly.

※ **Adjustment**

- Once carriage is properly installed, loosen nuts and adjust screws, (if not already done) allowing carriage to be centered in the inner mast.
- Adjust side roller by tightening screw until side roller just makes contact with mast. Back off approximately 1/10 turn on screw and tighten nut to lock screw in place.
- Run carriage up and down for the inner mast to be sure the carriage has free movement and does not stick. Also, make sure chains are properly adjusted. Refer to chain adjustment paragraph. Make adjustment when necessary and recheck operation of carriage.

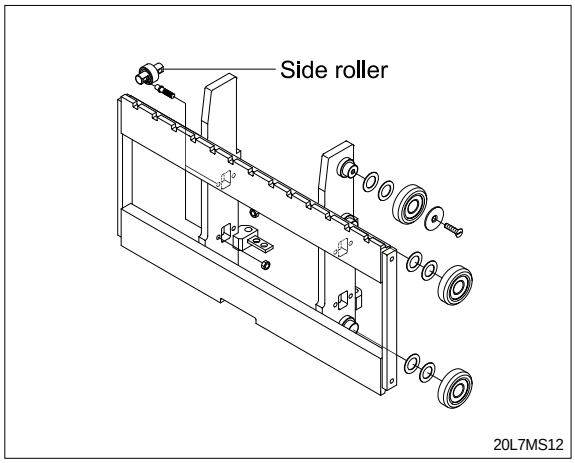

3) CARRIAGE LOAD ROLLER

(1) Remove carriage as outlined in the carriage assembly removal paragraph.
(2) Loosen and remove flat head bolts and plain washers from top load roller bracket.
(3) Using a pryer, remove load rollers from load roller bracket.
(4) Reverse the above procedure to assemble. Refer to MAST ROLLER ADJUSTMENT paragraph.

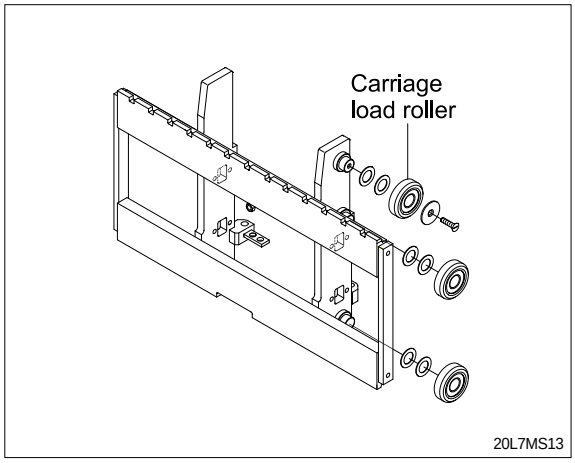

https://www.forkliftpdfmanuals.com/

4) MAST LOAD ROLLER AND BACK UP LINER

(1) 2 stage mast(V mast)

① Remove the carriage assembly and move them to one side.
② Loosen and remove hexagon bolts and washers securing lift cylinders to inner mast.
③ Loosen and remove hexagon bolts and nuts securing lift cylinders to inner mast.
④ Attach chains or sling to the inner mast section at top crossmember. Using an overhead hoist, slowly raise the inner mast high enough to clear lift cylinder.
⑤ After lowering the lift cylinder rods, and disconnecting lift cylinder hose, tilt the lift cylinders LH and RH and them with ropes to the outer mast.
⑥ Using the overhead hoist, lower inner mast until top and bottom rollers and back up liners are exposed.
⑦ Using a pryer, remove load rollers from load roller bracket. Remove back up liners and shims.
⑧ Thoroughly clean, inspect and replace all worn or damaged parts.
⑨ Reverse the above procedure to assemble. Refer to MAST LOAD ROLLER ADJUSTMENT paragraph.

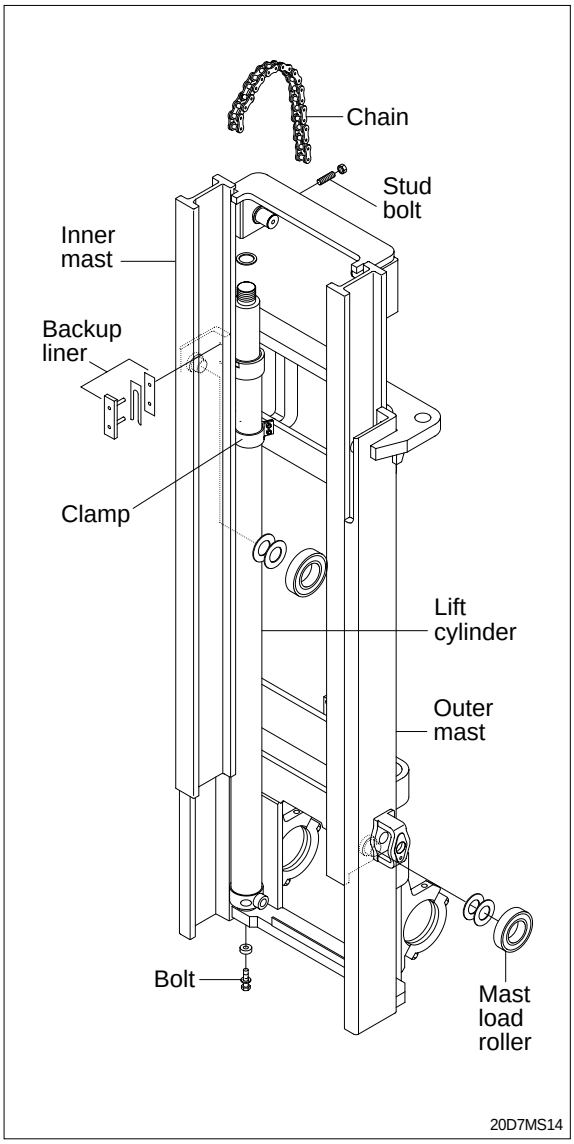

https://www.forkliftpdfmanuals.com/

(2) 2 stage mast(VF mast)

① Remove free lift chain connected between carriage and free lift cylinder.
② Remove the carriage assembly and move them to one side.
③ Loosen and remove hexagon bolts and washers securing lift cylinders to inner mast.
④ Loosen and remove hexagon bolts and nuts securing lift cylinders to inner mast.
⑤ Attach chains or sling to the inner mast section at top crossmember. Using an overhead hoist, slowly raise the inner mast high enough to clear lift cylinder.
⑥ After lowering the lift cylinder rods, and disconnecting lift cylinder hose, tilt the lift cylinders LH and RH and them with ropes to the outer mast.
⑦ Using the overhead hoist, lower inner mast until top and bottom rollers and back up liners are exposed.
⑧ Using a pryer, remove load rollers from load roller bracket. Remove back up liners and shims.
⑨ Thoroughly clean, inspect and replace all worn or damaged parts.
⑩ Reverse the above procedure to assemble. Refer to MAST LOAD ROLLER ADJUSTMENT paragraph.

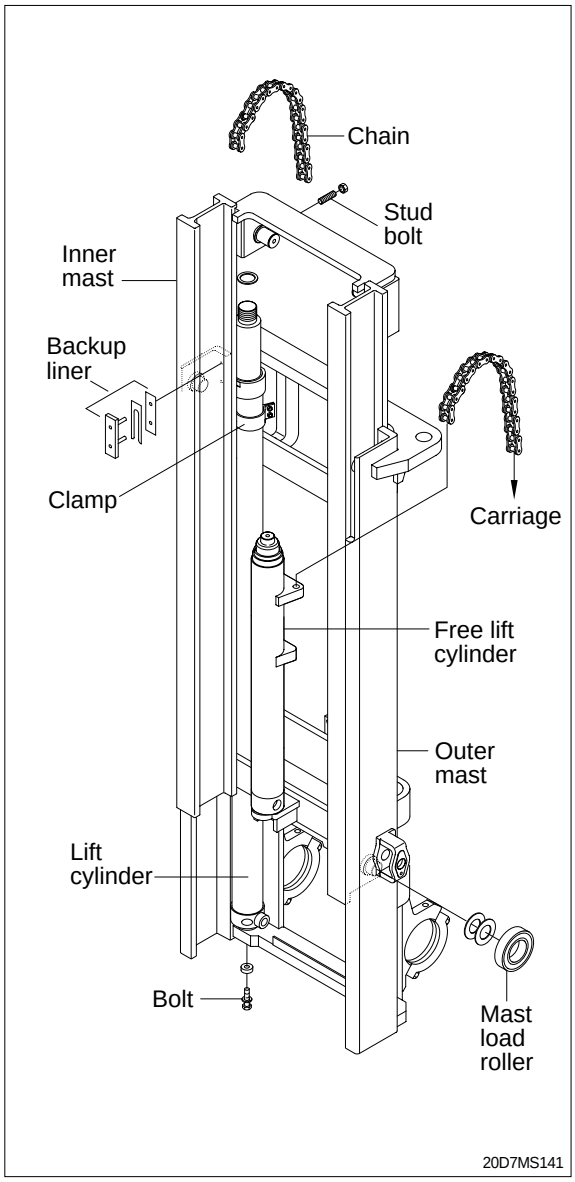

https://www.forkliftpdfmanuals.com/

(3) 3 stage mast(TF mast)

① Remove the carriage assembly and move to one side.

② Loosen and remove hexagon bolt securing bottom cylinder from outer mast.

③ Loosen and remove bolts and special washers securing lift cylinders to middle mast.

④ Attach chains or sling to the inner and middle mast section at top crossmember. Using an overhead hoist, slowly raise the uprights high enough to clear lift cylinder.

⑤ After lowering the lift cylinder rods, and disconnecting lift cylinder hose, tilt the lift cylinders LH and RH and tie them with ropes to the outer mast.

⑥ Using the overhead hoist raise inner and middle masts. Place 4 inch block of wood under the free lift cylinder bracket of the inner mast then lower mast sections (this will create slack in the chains).

⑦ Remove retaining rings securing chain sheaves to sheave support brackets. While support chains, remove chain sheaves and let chains hang free. The upper outer and lower middle mast rollers and back up liners are now exposed.

⑧ Using a pryer, remove load rollers from load bracket. Remove back up liners and shims.

⑨ Attach chains or sling to the middle mast section at top crossmember. Using an overhead hoist, slowly raise the middle mast until top and bottom rollers are exposed.

⑩ Using a player, remove load rollers from load roller bracket.

⑪ Thoroughly clean, inspect and replace all worn or damaged parts.

⑫ Reverse the above procedure to assemble. Refer to MAST LOAD ROLLER ADJUSTMENT paragraph.

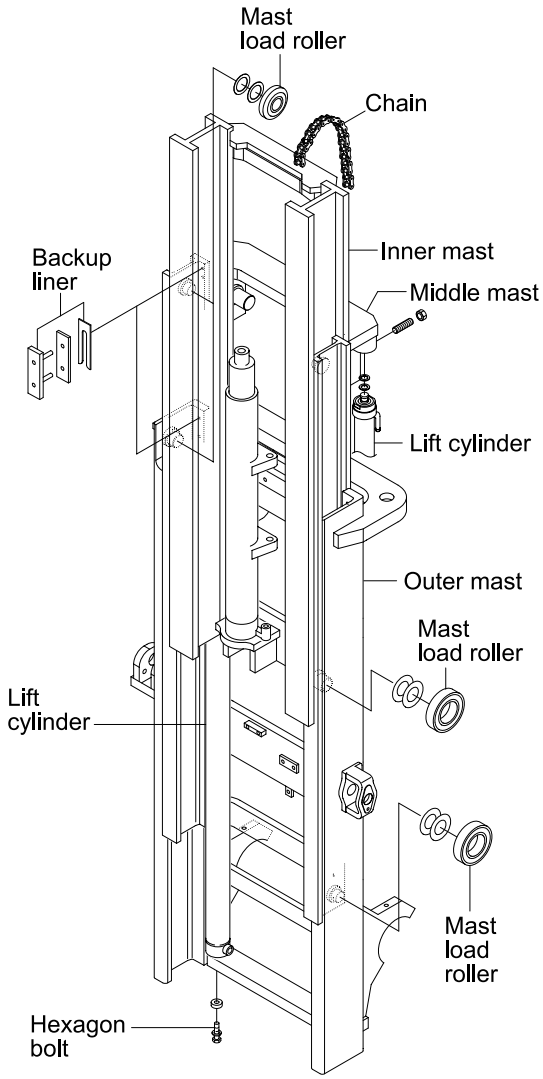

20D7MS15

https://www.forkliftpdfmanuals.com/

5) ELEVATING MAST

(1) Inner mast (V, VF mast)

① After completing all necessary steps for load rollers and back up liner removal use an overhead hoist and sling or chain around upper crossmember of the inner mast section.
② Lift inner mast upright straight up and out of outer mast section.
③ Replace and reverse above procedure to install. Make all necessary measurements and adjustments.

(2) Inner and middle mast(TF mast)

① After completing all necessary steps for load rollers and back up liner removal. Remove rear chains and sheave support if not already done.
② Disconnect free lift cylinder hose. Drain hose into a suitable pan or container and cap hose.
③ While supporting free lift cylinder assembly, remove bolts and washers securing cylinder to mast crossmember.
④ Place a sling around free lift cylinder and attach to an overhead hoist. Slowly raise and move cylinder to one side.
⑤ Attach chains or sling to the inner mast section at top crossmember. Using an overhead hoist slowly raise the upright straight up and out of middle mast section.
⑥ Attach chains or sling to the middle mast section at top crossmember. Using an overhead hoist slowly raise the upright straight up and out of outer mast section.
⑦ Replace upright and reverse above procedure to install. Make all necessary measurements and adjustments.

https://www.forkliftpdfmanuals.com/

6) CHAIN

(1) Chain sheave(V, VF mast)

① Place a sling around carriage and attach to an overhead hoist. Lift carriage high enough so that the tension on the chain over sheaves is relieved after the carriage is blocked. Position wooden blocks under the carriage and lower it.

② Remove the split pin securing the chain anchor pins and discard. While supporting the chains, remove the chain anchor pins and drape the chains over the

③ carriage.

Remove retaining ring securing sheaves to sheave support. Remove sheaves

④ with bearings.

Remove bearing retaining ring from

⑤ sheave and press bearings from sheaves.

Thoroughly clean, inspect and replace all

⑥ worn or damaged parts.

Reverse the above to assemble and install.

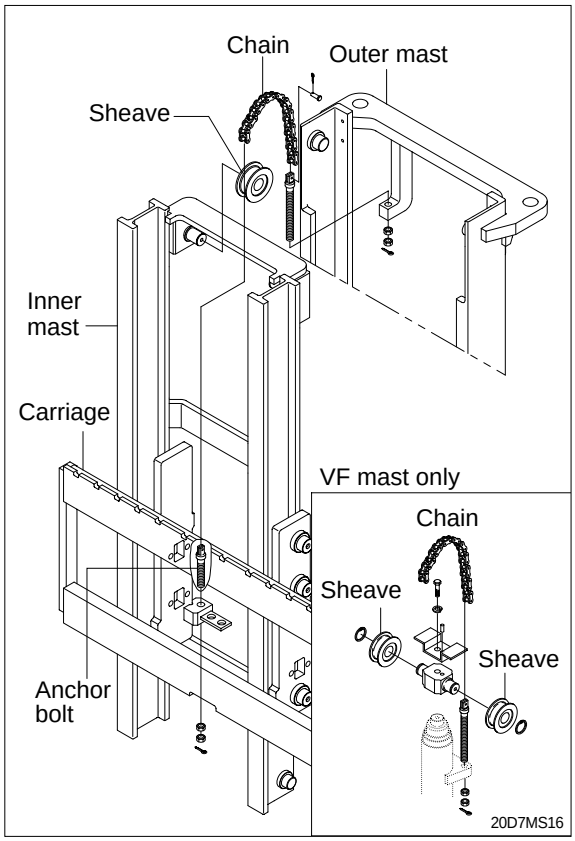

(2) Rear chain sheave(TF mast)

① Raise and securely block carriage and inner mast section.

② Remove the split pin securing the chain anchor pins and discard. While supporting the chains, remove the chain anchor pins from outer mast section.

③ Remove chains.

④ Remove retaining ring securing chain sheaves to sheave support. Pry off sheaves with bearings.

⑤ Remove bearing retaining ring from sheave and press bearings from sheaves.

⑥ Thoroughly clean, inspect and replace all worn or damaged parts.

⑦ Reverse the above procedure to assemble and install. Use new split pins in chain anchor pins.

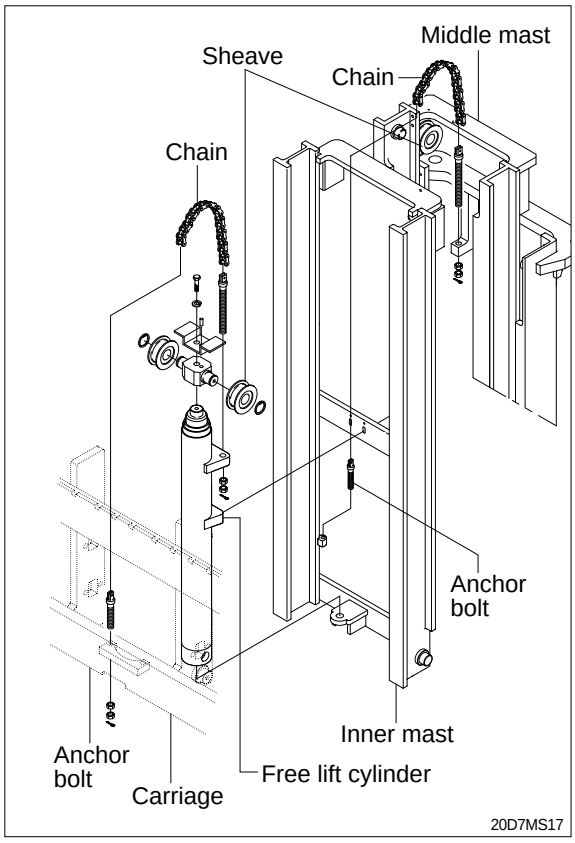

https://www.forkliftpdfmanuals.com/

(3) Chain wheel bearing support(TF mast)

① Remove the carriage assembly and move to one side.
② After removing bolt to securing chain wheel bearing support assembly to free lift cylinder.
After a sling to the chain wheel bearing support assembly. Using an overhead hoist, lift support assembly straight up and off of free lift cylinder. Move assembly to work area.
③ Remove retaining ring securing chain wheel bearing to chain wheel bearing support.
④ Remove bearing retaining ring from chain wheel bearing and press bearings from chain wheel bearings.
⑤ Thoroughly clean, inspect and replace all worn or damaged parts.
⑥ Reverse the above procedure to install.

(4) Rear chain(TF mast)

① Remove the carriage assembly and move to one side. Refer to carriage removal and installation.
② Raise and securely block truck approximately 6 inches from the floor.
③ Using a sling or chain around inner mast section attached to an overhead hoist, slowly raise inner mast until there is enough slack in the chains to remove them. Block inner mast section.
④ Remove split pins and chain anchor pins securing chains to chain anchor(part of inner mast).
⑤ While supporting the chains, remove split and chain anchor pins securing chains to chain anchors attached to outer mast section.
⑥ Remove chains.
⑦ Reverse the above to assemble and install. Use new split pins in chain anchor pins. Refer to this section for Load chain lubrication and adjustment.

(5) Carriage chain

① Place a sling around carriage front plate and attach to an overhead hoist. Lift and secure carriage high enough so that split and chain anchor pins on carriage can be easily be removed. Remove chain anchor pins from carriage and drape chains out over carriage.
② Place a wooden block under the carriage and lower the carriage on the block.
③ While supporting the chains, remove split pins and chain anchor pins from chain anchors.
④ Remove chains and wash them with solvent. Refer to this section for Load chain inspection and maintenance.
⑤ Reverse the above procedure to assemble and install. Use new split pins in chain anchor pins. Refer to this section for Load chain lubrication and adjustment.

(6) Load chain inspection and maintenance

After every 200 hours of truck operation, lift chains should be inspected and lubricated inspect for the following chain conditions :

① Wear

As the chain flexes on and off the chain wheel bearings, the joints very gradually wear. The stretch a chain developes in service is due to material being worn off pin outer diameter and pitch hole inner diameter on the inside plate.
Chain wear can be measured using a wear scale or steel tape. When chains have elongated 2%, they should be discarded. When checking chain wear, be sure to measure a segment of chain that operates over a sheave. Do not repair chains by cutting our the worn section and splicing in a new piece. If part of the chain is worn, replace all the chains on the truck.

https://www.forkliftpdfmanuals.com/

② Rust and corrosion

Chains used on lift trucks are highly stressed precision components. It is very important that the "as-manufactured" ultimate strength and fatigue strength be maintained throughout the chain service life. Corrosion will cause a major reduction in the load-carrying capacity of lift chain or roller chain because corrosion causes side plate cracking.

③ Cracked plate

The most common cause of plate cracking is fatigue failure. Fatigue is a penomenon that affects most metals and many plastics. After many repeated heavy loads, the plates may crack and the chains will eventually break. Fatigue cracks are almost always found through the pitch holes perpendicular to the pitch line. Contrast this failure mode to the random failures caused by stress-corrosion cracking. If cracks are present, replace all the chain on the truck. Noise in the chain indicates that the plate is on the verge of cracking and will be failed before long.

④ Tight joints

All joints in lift chain should flex freely. Tight joints resist flexure, increase internal friction, thus increasing chain tension required to lift a given load. Increased tension accelerates wear and fatigue problems.

Tight joints in lift chains can be caused by :

- Bent pins or plates.
- Rusty joints.
- Peened plate edges.

Oil rusty chains and replace chains with bent or peened components.

⑤ Protruding or turned pins

Heavily loaded chains operating with lube generate tremendous friction between pins and plates. In extreme cases, the frictional torque in the joint can actually turn pins in the press-fit outside plates. If chain is allowed to operate in this condition, the pins slowly work out of the chain causing chain failure. Turned pins can be quickly spotted because the flats on the V heads are no longer in line. Chains with turned or protruding pins should be replaced immediately. Do not attempt to repair the chain by driving pins back into the chain.

⑥ Chain side wear

A wear pattern on pin heads and outside plates indicates misalignment. This condition damages chain and sheaves as well as increasing internal friction in the chain system.

⑦ Chain anchors and chain wheel bearings

An inspection of the chain system includes a close examination of chain anchors and chain wheel bearings. Check chain anchors for wear, breakage and misalignment.

Anchors with worn or broken fingers should be replaced. Anchors should be adjusted to eliminate twisting or other misalignment in the chain. When chain is misaligned, load is not distributed uniformly between the plates. Prolonged operation will result in premature fatigue failure. Chain wheel bearings with badly worn flanges and outside diameter should be replaced. Heavy flange wear indicates chain misalignment.

https://www.forkliftpdfmanuals.com/

⑧ Chain wear scale

The chain can be checked for wear or stretching with the use of a chain wear scale. Stretching of a chain is due to the elongation of the pitch holes and wearing of the pin O.D. The greatest amount of stretching occurs at the areas of the chain that flex over the sheaves most frequently. Check the chain at this point with a scale. The wear scale has instructions printed on the sides for use in determining chain stretch and are as follows :

- Determine pitch length of chain using 6 inch scale on one side of wear scale.
- If pitch is 1/2(12.7㎜), 3/4(19.05㎜), 1(25.4㎜), 1-1/2(38.1㎜), 2(50.8㎜), use side A of scale.
- If pitch is 5/8(15.875㎜), 1-1/4(31.75㎜) or 2(50.8㎜), use side B.
- Align point A or B to center of a pin and note position of the opposite A or B point.
- If other point also lines up with a pin, the chain is worn and should be replaced.

If any of the above conditions exists(cracked plates, turned pins, stretching etc), the chains should be replaced in pairs as a complete assembly. Order chains by part number to insure the correct chain length, pitch and material specifications.

(7) Load chain lubrication and adjustment

① Lubrication

The most important consideration in field maintenance of lift chains is lubrication. Hard working, heavily loaded chains cannot be expected to give satisfactory wear life without scheduled periodic re-lubrication. Like all bearing surfaces, the precision manufactured, hardened steel, joint-wearing surfaces require a film of oil between mating parts to prevent rapid wear. Oil must penetrate the chain joint to prevent wear. Applying oil to external surfaces will prevent rust, but oil must flow into the live bearing surfaces for maximum wear life. Frequency of re-lube will vary with operating conditions and environment, the best estimate of lube period is 200 hours. Trucks parked outdoors or trucks in extremely severe service, may require more frequent re-lube to maintain an oil film on all chain surface.

- Wipe off the old oil with a clean cloth and blow out the remaining dirt with compressed air.

⚠ Wear eye protection.

- With a clean brush, apply EP-140 extreme pressure lubricant or heavy motor oil(40W).

② Replacement

Replace chains as a pair. It will be virtually impossible to maintain uniform loading between the strands if a new chain is put into service opposite an old chain. The jonts in the old chain will be greater than that on the new chain, greatly complicating the problem of maintaining equal chain tension. The new chain will wear more slowly causing it to bear the major portion of the load resulting in premature wear and fatigue failure. Don't steam clean or decrease new chains.

The manufacturer's grease is effective in reducing wear and corrosion. If the original factory lube is dried out or wiped off, soak the new chain in heavy engine oil for at 1/2 hour prior to installing on truck. After the old chains have been stripped from the mast, very carefully inspect chain anchors and chain wheel bearing. Broken, cracked or worn anchor must be replaced using the new anchor pin and split pin. Do not paint newly replaced chain after it has been installed.

https://www.forkliftpdfmanuals.com/

③ Adjustment

Chain adjustments are important for the following reasons :

- Equal loading of chain.
- Proper sequencing of mast.
- Prevent over-stretching of chains.
- Prevent chains from jumping off sheaves if they are too loose.

④ Adjustment procedure

- With mast in its fully collapsed and vertical position, lower the fork to the floor.
- Adjust the chain length by loosening or tightening nut on the chain anchor.
  After making adjustment on the mast, be sure to tighten the nut.

https://www.forkliftpdfmanuals.com/

MODEL L4GC
SHOP MANUAL
(FOR INDUSTRIAL USE)

HYUNDAI

https://www.forkliftpdfmanuals.com/

FORWORD

We would like to express our sincere gratitude to the patrons who have given us unwavering encouragement. This manual covers shop manual and parts catalog in one volume for an easy reference of parts list, as well as contains the accurate and efficient service procedures for HYUNDAI L4GC industrial engine.

This manual includes specifications, troubleshooting, removal, installation, disassembly and assembly in each group and presents component illustrations and descriptions for an easy reference.

Accordingly, thoroughly read this manual, rapidly purchase the required parts and service the engine in proper methods to extend its life and benefit.

Improper service methods and procedures may shorten the engine life resulting from its low performance. Hyundai genuine parts are designed and built to provide the best performance in your engine. If your claim is caused by using non-Hyundai genuine parts or servicing at places not recommended, your warranty is not available.

Hyundai Motor Co., Inc. makes efforts to enhance quality and build better parts and service data for you. We want to assist you in every way possible with this manual and your purchase of HYUNDAI engine is highly appreciated.

October 2006

Hyundai Motor Co., Inc.
Industrial Engine Development Team
(TEL 052-280-8221~8223)

O.E.M Parts Export Team
(TEL 02-746-0291~0298)

NOTE: Contents and specifications are subject to change according to design changes without notice.

https://www.forkliftpdfmanuals.com/

IMPORTANT SAFETY NOTICE

Appropriate service methods and proper repair procedures are essential for the safe, reliable operation of all engines as well as the personal safety during work. This manual provides general directions for the efficient service methods and procedures**.**

There are numerous variations in procedure, techniques, tools and parts for servicing engines, as well as in the skill of the individual technician.
This manual cannot possibly anticipate all such variations and provide advice or cautions as to each.
Accordingly, anyone who departs from the instructions provided in this manual must establish that he comprises neither his personal safety nor the vehicle integrity by his choice of methods, tools or parts.

NOTE, CAUTION, WARNING

NOTE : Information needed in reference to a repair service.

CAUTION: Information about an activity that could cause damage to the vehicle.

WARNING : Information about an activity that could cause injury or damage to the driver, occupants or repairman.

[SAFETY INFORMATION]

The following list contains some general warnings that you should follow when you work on an engine.

- Always wear safety glasses for eye protection.
- Be sure that the ignition switch is always in the OFF position, unless otherwise required by the procedure.
- Operate the engine only in a well-ventilated area to avoid the danger carbon monoxide poisoning.
- Keep yourself and your clothing away from moving parts when the engine is running, especially the drive belt.
- To prevent serious burns, avoid contact with hot metal parts such as the radiator, exhaust manifold, tail pipe, catalytic converter and muffler.
- Do not smoke while working on an engine.
- To avoid injury, always remove rings, watches, loose hanging jewelry and loose clothing before beginning to work on an engine.
- Keep hands and other objects clear of the radiator fan.
  The fan can be operated with the ignition key in the OFF position. Therefore necessarily disconnect the radiator fan motor connector.

https://www.forkliftpdfmanuals.com/

CONTENTS

1.	GENERAL	1-1
2.	ENGINE MECHANICAL SYSTEM	2-1
3.	ENGINE ELECTRICAL SYSTEM	3-1
4.	FUEL SYSTEM	4-1

https://www.forkliftpdfmanuals.com/

CHAPTER 1. GENERAL

1. GENERAL 1- 1

2. RECOMMENDED LUBRICANTS AND CAPACITIES 1- 5

3. SCHEDULED MAINTENANCE 1- 6

https://www.forkliftpdfmanuals.com/

ENGINE IDENTIFICATION NUMBER LOCATION

The engine identification number is stamped on the left side of the top edge of the exhaust manifold cylinder block.

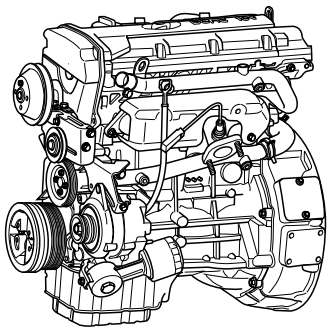
L4GC200A

ENGINE IDENTIFICATION NUMBER

The engine identification number consists of 11 digits.

L	4	G	C	X	0	0	0	0	0	1
1	2	3	4	5	6					

1. Engine fuel
   L : LPG
2. Engine range
   4 : In line 4 cycle 4 cylinder
3. Engine development order
   G : β engine
4. Engine capacity
   C: 1975 CC (β engine)
5. Production year
   1 : 2001 2 : 2002 3 : 2003
   4 : 2004 5 : 2005 6 : 2006
6. Engine production sequence number
   000001 ~ 999999

https://www.forkliftpdfmanuals.com/

SAFETY NOTICE

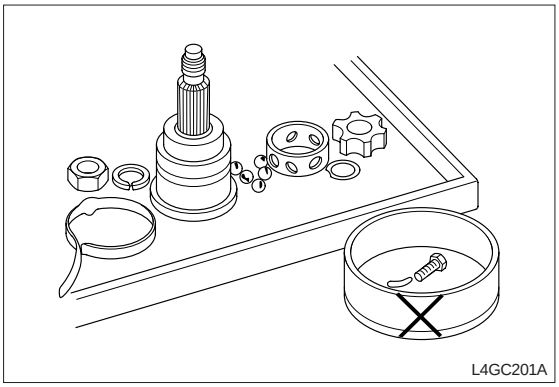
L4GC201A

1. REMOVING AND DISASSEMBLING
   After finding the malfunctioning reason and determining the removal and disassembly if necessary, simultaneously with checking the defect parts, start the job as the instruction of the shop manual.
   To prevent mal-assembly and to ease job, put punch marks or identification marks on the places where not affect normal function and exterior.
   Arrange multi-piece parts and similar parts in order when disassembling not to make a mistake while reassembling.
   1) Arrange the removed parts in order.
   2) Sort replacement parts and re-use parts
   3) When replacing bolts and nuts, necessarily use the specified standard parts.

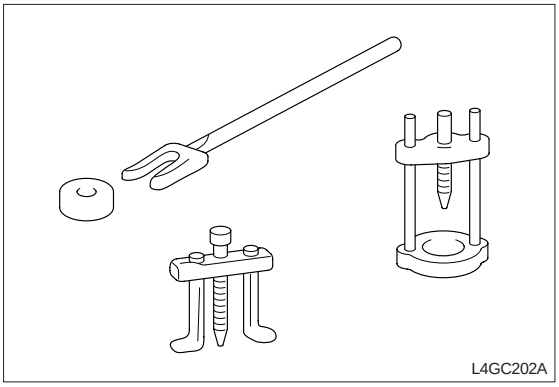
L4GC202A

2. SPECIAL TOOL
   Necessarily use the special tool as instruction to prevent parts from damage as result of using other general tool.

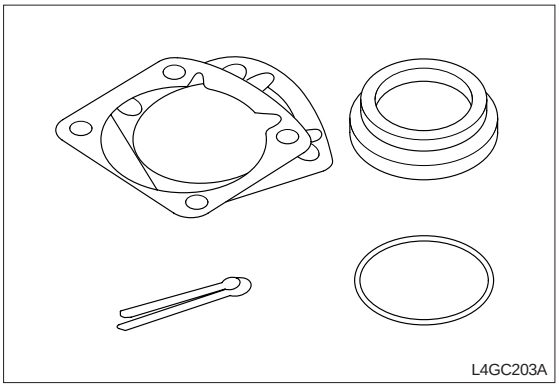
L4GC203A

3. REPLACEMENT PARTS
   The following parts should be replaced with new parts after removing.
   1) Oil seal
   2) Gasket (except the locker cover gasket)
   3) Packing
   4) O-ring
   5) Locker washer
   6) Split pin

https://www.forkliftpdfmanuals.com/

4. PARTS

1) When replacing parts, necessarily use the Hyundai genuine parts.
2) It is recommended to use spare parts prepared in the set or kit.
3) Spare parts can be different from actual assembled parts as the result of parts unification, so start the job after checking the parts catalog

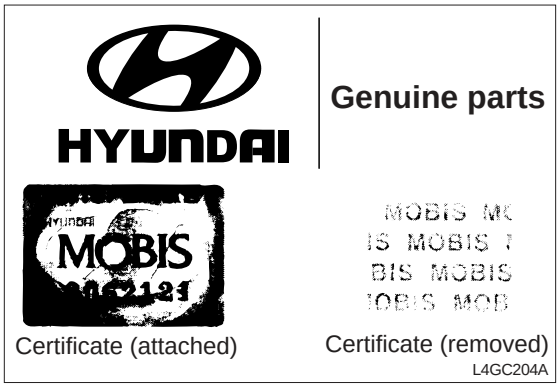

Certificate (attached) Certificate (removed)

L4GC204A

https://www.forkliftpdfmanuals.com/

TIGHTENING TORQUE TABLE OF STANDARD PARTS

Bolt nominal diameter (mm)	Pitch (mm)	Torque (kg·m)	
		Head mark 4	Head mark 7
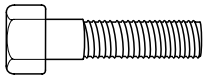 L4GC205A	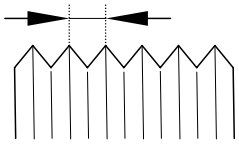 L4GC206A	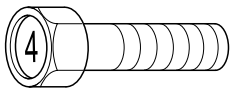 L4GC207A	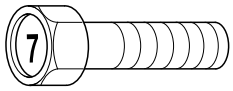 L4GC208A
M5	0.8	0.3 ~ 0.4	0.5 ~ 0.6
M6	1.0	0.5 ~ 0.6	0.9 ~ 1.1
M8	1.25	1.2 ~ 1.5	2.0 ~ 2.5
M10	1.25	2.5 ~ 3.0	4.0 ~ 5.0
M12	1.25	3.5 ~ 4.5	6 ~ 8
M14	1.2	7.5 ~ 8.5	12 ~ 14
M16	1.5	11 ~ 13	18 ~ 21
M18	1.5	16 ~ 18	26 ~ 30
M20	1.5	22 ~ 25	36 ~ 42
M22	1.5	29 ~ 33	48 ~ 55
M24	1.5	37 ~ 42	61 ~ 70

NOTE

- ***The torques shown in the table are standard values under the following conditions.***
  1. ***Nuts and bolt are made of steel bar and galvanized.***
  2. ***Galvanized plain steel washers are inserted.***
  3. ***All nuts, bolts, plain washers are dry.***
- ***The torques shown in the table are not applicable,***
  1. ***When spring washers, toothed washers and the like are inserted.***
  2. ***If plastic parts are fastened.***
  3. ***If oil is applied to threads and surfaces.***
- ***If you reduce the torques in the table to the percentage indicated below under the following conditions, it will be the standard value.***
  1. ***If spring washers are used : 85%***
  2. ***If threads and bearing surfaces are stained with oil: 85%***

https://www.forkliftpdfmanuals.com/

RECOMMENDED LUBRICANTS AND CAPACITIES

LUBRICANTS CAPACITIES

Description		Capacities	Specified oil
Engine oil	Oil pan	3.7 ℓ	Above API SG (10W/30 or 15W/40)
	Oil filter	0.3 ℓ	
	Total	4.0 ℓ	
Coolant (for engine)		3.0 ℓ	It varies according to the radiator capacity

https://www.forkliftpdfmanuals.com/

SCHEDULED MAINTENANCE

ENGINE OIL CLASSIFICATION

Recommended API classification: Above SG

Recommended SAE viscosity classification

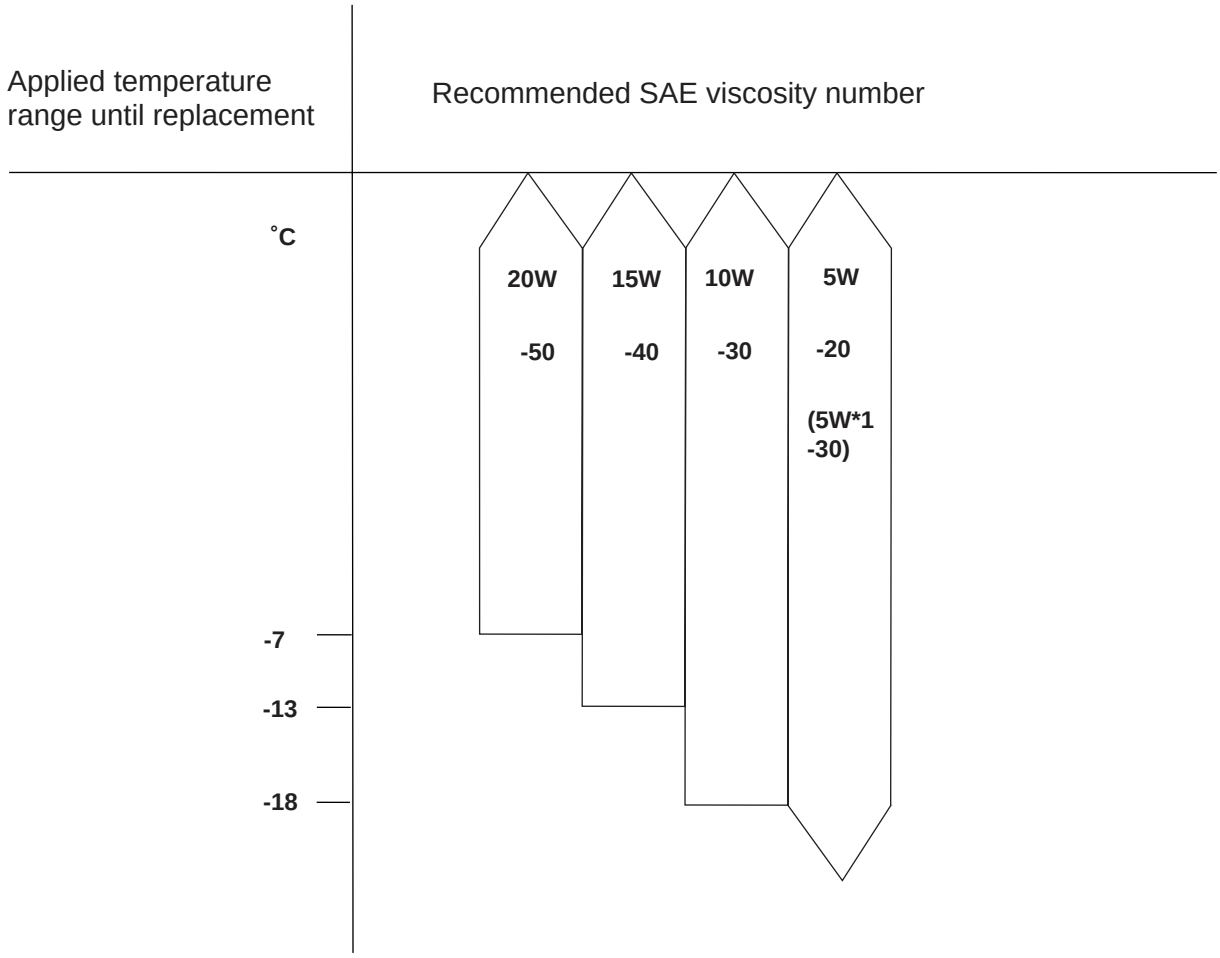

*1 : 5W-20 engine oil is recommended for everywhere
If 5W-20 is not applicable, proper engine oil will be possible according to temperature ranges.

L4GC209A

The following lubricants should be selected for all engines to enhance excellent performance and maximum effect.

1. Observe the API classification guide.
2. Proper SAE classification number should be selected within ambient temperature ranges. Do not use the lubricant with SAE classification number and API grade not identified on the container.

https://www.forkliftpdfmanuals.com/

CHECKING ENGINE OIL LEVEL

1. Check that the oil level is between "MIN" and "Max" marks on the engine oil level gauge.
2. If the oil level is below "MIN" mark, add oil until the level is within the specified ranges.
3. Check the engine for oil contamination and viscosity and replace if necessary.

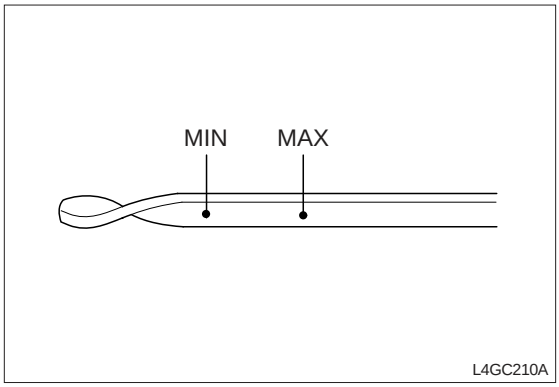

REPLACING ENGINE OIL

1. When cooling the engine, warm up the engine up to the normal temperature.
2. Stop the engine.
3. After removing the oil filler cap, oil filter, and drain plug, drain the engine oil.
4. Tighten the drain plug to the specified torque(3.5~4.5kg·m).

   CAUTION
   When installing the drain plug, always use a new plug gasket.

5. Pour new engine oil to the oil filler.

Oil capacity (including filter)	4.0 ℓ

   CAUTION
   Over replenishing can happen oil saturation and overpressure.

6. Close the oil filler cap.
7. Run the engine.
8. Stop the engine and after checking the oil level, add oil if necessary.

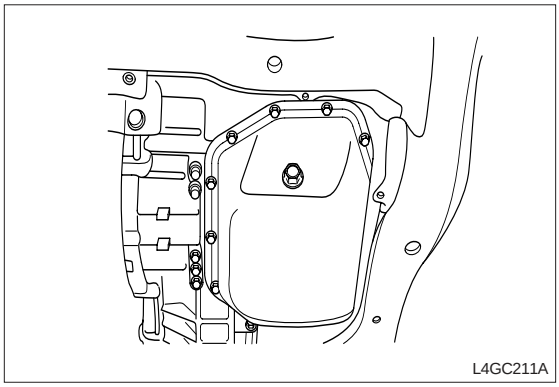

https://www.forkliftpdfmanuals.com/

REPLACING ENGINE OIL FILTER

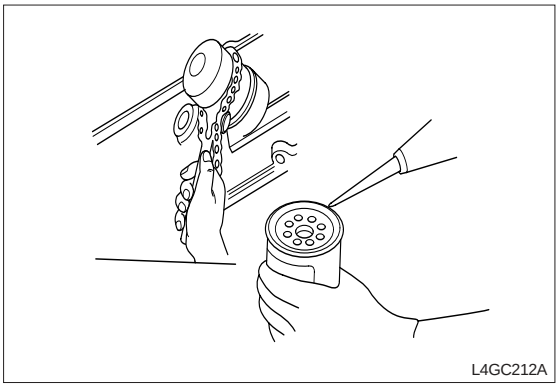
L4GC212A

1. Remove the oil filter using a filter wrench.
2. When installing new parts, after applying engine oil to the O-ring, tighten the oil filter securely by hand.
3. Tighten the oil filter to the specified torque.

Oil filter	1.2 ~ 1.6 kg·m

4. Start the engine and inspect the oil leak.

CHECKING DRIVE BELT TENSION

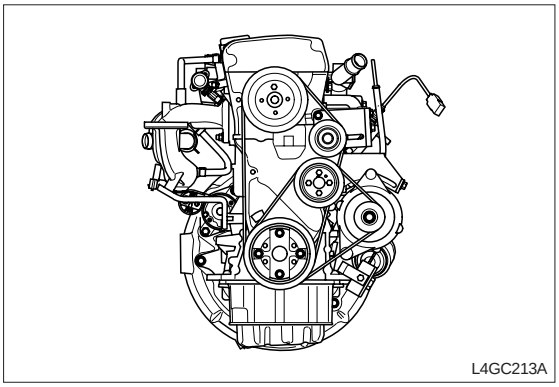
L4GC213A

1. Press the middle of the water pump pulley and alternator pulley with 10kg·f.
2. Inspect the belt deflection by pressing it.
3. If the belt deflection is out of the standard, adjust it as follows.

Item	Standard	
	New belt	Used belt
Drive belt deflection	4.0 ~ 4.4mm	5.1 ~ 5.7mm

CHECKING SPARK PLUG

INSPECTION

1. Remove the spark plug from the cylinder head using a spark plug wrench.

CAUTION
Prevent foreign material from getting in the spark plug fitting hole.

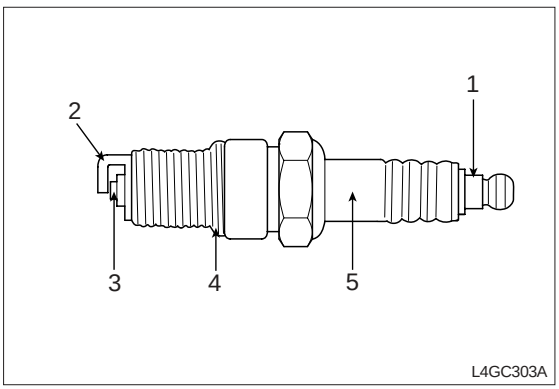

L4GC303A

2. Check the following items of the spark plug.
   1) Damage of the insulator
   2) Wear of the terminal
   3) Carbon deposits
   4) Damage of the gasket
   5) Porcelain insulator in the spark plug clearance

https://www.forkliftpdfmanuals.com/

3. Check the plug clearance using a plug clearance gauge and if the value is not within the specified values, adjust it by bending the ground clearance.
   When installing a new spark plug, install it after checking the uniform plug clearance.

Spark plug clearance	0.7 ~ 0.8mm

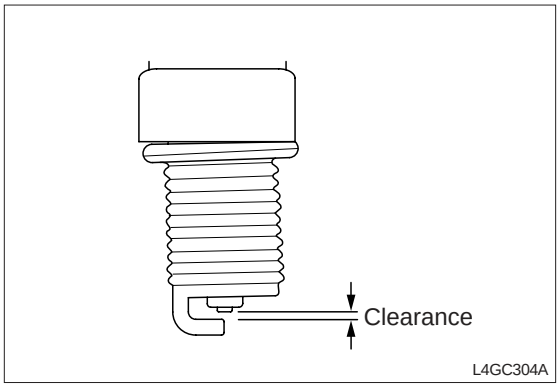

4. Install the spark plug and tighten it to the specified torque. Take care not to over tighten it to prevent cylinder head threads from damage.

SPARK PLUG ANALYSIS

State	Contact point is black	Contact point is white
Description	· Density of the fuel mixture is thick · Lack of air intake	· Density of the fuel mixture is thin · Ignition timing is fast · Spark plug is tight · Lack of torque

SPARK PLUG TEST

After connecting the spark plug to the high tension cable, connect the outer terminal(main body) to the ground and crank the engine.
Because the discharging clearance is narrow in the air, only slight spark will arise. But if the spark plug is defect, spark does not arise because insulation is damaged.

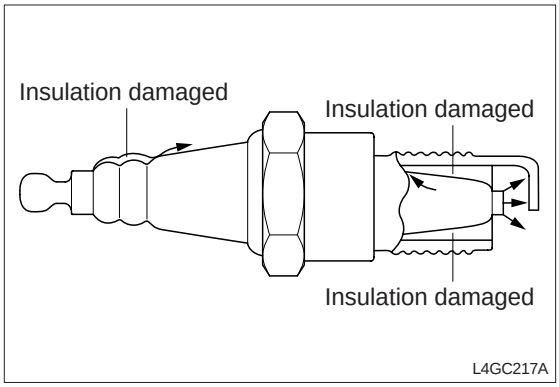

https://www.forkliftpdfmanuals.com/

REPLACING OXYGEN SENSOR

Oxygen sensor is as a fuel mixture control unit, if it is damaged, exhaust gas will be bad as well as engine performance. So, if the oxygen sensor is defected, necessarily replace it.

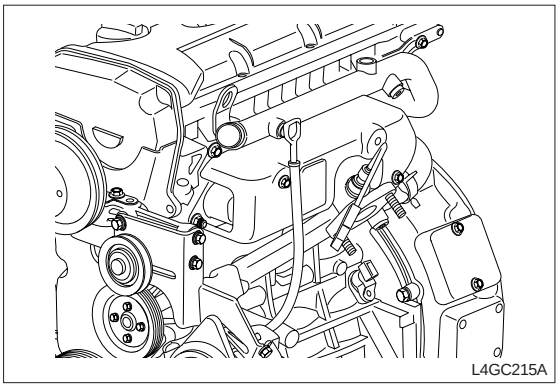
L4GC215A

COOLING SYSTEM

Check the cooling system hoses for damage and looseness or inspect the joints for coolant leaks.

COOLANT

When the engine is delivered, the engine cooling system contains mixture of antifreeze(40%) and water(60%).
Because the cylinder head and the water pump are made of aluminum alloy, the mixture should contain antifreeze (ethylene glycol) of 30~60% to prevent those from corrosion, freezing and bursting.

NOTE

- ***If the coolant contains less than 30% of antifreeze, anticorrosion is decreased.***
- ***If the coolant contains more than 60% of antifreeze, the engine will be fatally affected, resulting from decreased anti-freezing and engine cooling. Use only the recommended antifreeze and do not mix with other production.***

Recommended antifreeze	Ethylene glycol

https://www.forkliftpdfmanuals.com/

COOLANT VISCOSITY MEASUREMENT

Run the engine until the coolant is mixed completely, drain a little of coolant to determine the coolant viscosity at a safe operating temperature, measure the coolant viscosity and adjust it to the specified value.

REPLACING COOLANT

CAUTION

If the coolant is hot, injury can happen, so when the engine is hot, never open the radiator cap until the coolant temperature is dropped. When open the radiator cap, be careful of hot coolant or steam, surround the upper portion of the cap with a rag, slightly open it counterclockwise to drop the pressure through the reservoir tank tube, and then slowly turn the cap to open.

1. After opening the radiator cap, loosen the drain plug and the engine drain plug and drain the coolant.
2. Remove the reservoir tank and drain the coolant.
3. After draining the coolant completely, close the drain plug, fill the engine and the radiator full with a radiator cleaner, and clean the engine and the radiator.
4. After completing the cleaning, drain the cleaner and close the radiator and engine drain plug.
5. After running the engine for a while, inspect the coolant level and add a coolant to the specified level.
6. Replenish the reservoir tank with a coolant until the level reads between "FULL" and "LOW" marks.

https://www.forkliftpdfmanuals.com/

CHAPTER 2. ENGINE MECHANICAL SYSTEM

1. GENERAL 2- 1

2. CYLINDER BLOCK 2-20

3. MAIN MOVING SYSTEM 2-29

4. COOLING SYSTEM 2-56

5. LUBRICATION SYSTEM 2-62

6. INTAKE AND EXHAUST SYSTEM 2-64

7. CYLINDER HEAD ASSEMBLY 2-69

8. TIMING SYSTME 2-78

https://www.forkliftpdfmanuals.com/

GENERAL

OUTLINE

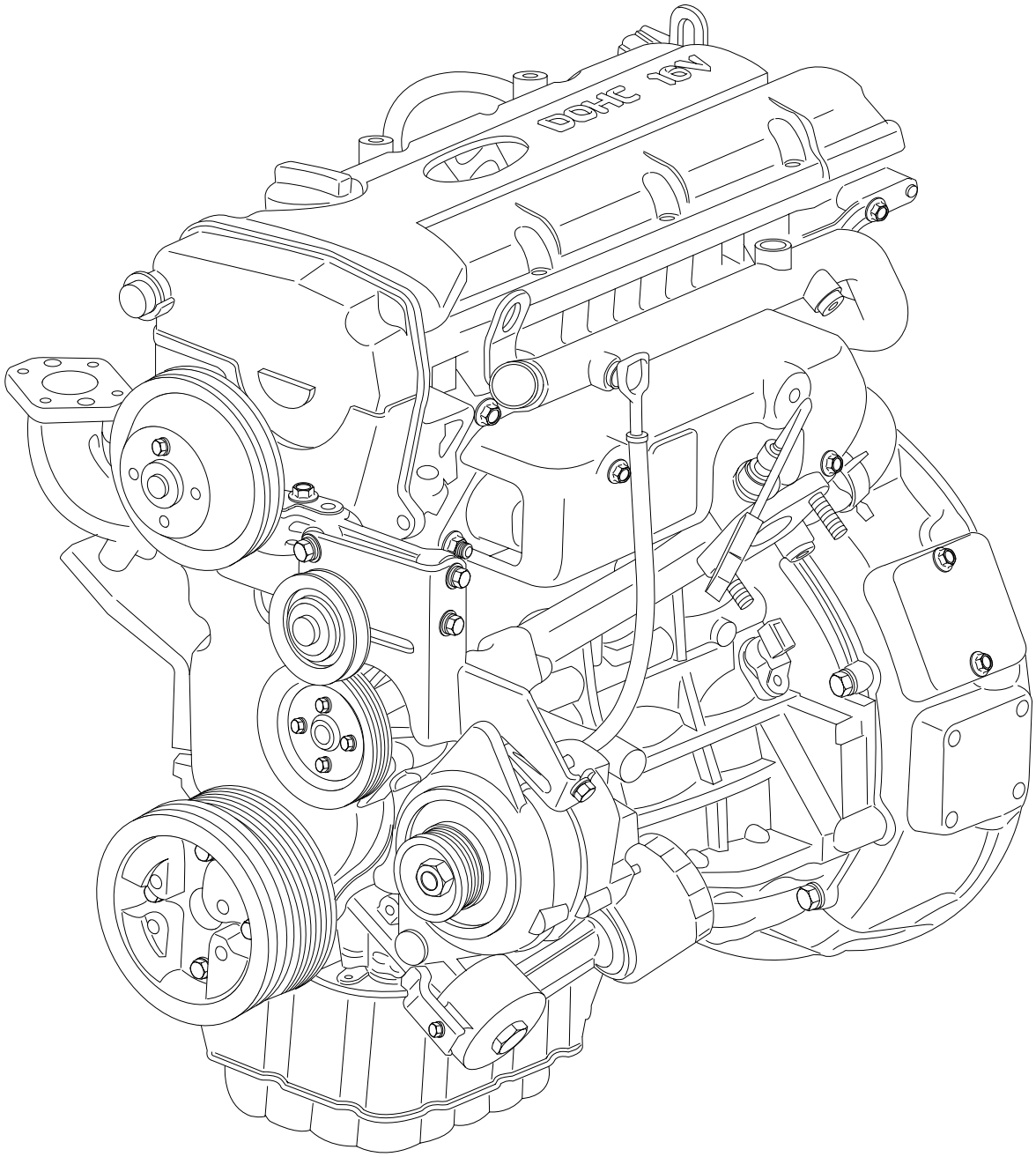

L4GC001A

https://www.forkliftpdfmanuals.com/

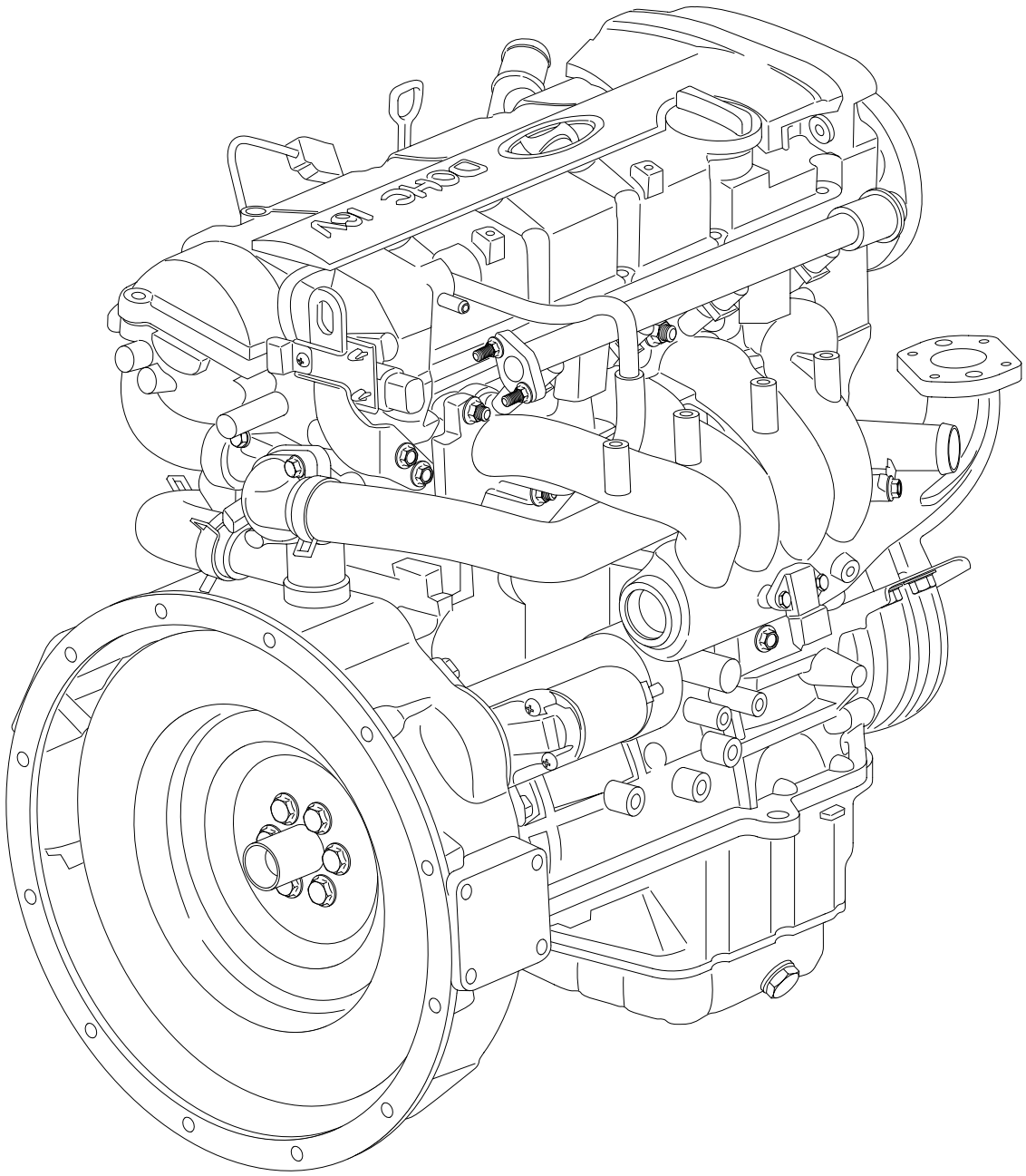

L4GC002A

https://www.forkliftpdfmanuals.com/

GENERAL

SPECIFICATIONS

Description	Specification	Limit
GENERAL		
Type	Series, DOHC	
Cylinder number	4	
Bore	82 mm	
Stroke	93.5 mm	
Displacement	1,975 cc	
Compression ratio	9.4	
Firing order	1 - 3 - 4 - 2	
RPM	700 ± 100 rpm	
Ignition timing	BTDC 8° ± 5 °	
Valve timing		
Intake		
Open	BTDC 2°	
Close	ABDC 16°	
Exhaust		
Open	BBDC 18°	
Close	ATDC 2°	
Valve over rap	4 °	
CYLINDER HEAD		
Flatness of gasket surface	0.03 mm or less	0.06 mm
Flatness of manifold mounting surface	0.15 mm or less	0.3 mm
Oversize of valve seat hole		
Intake		
0.3 OS	33.3 ~ 33.325 mm	0.2 mm
0.6 OS	33.6 ~ 33.625 mm	
Exhaust		
0.3 OS	28.8 ~ 28.821 mm	
0.6 OS	29.1 ~ 29.121 mm	
Oversize of valve guide hole		
0.05 OS	11.05 ~ 11.069 mm	
0.25 OS	11.25 ~ 11.268 mm	
0.50 OS	11.50 ~ 11.518 mm	
CAMSHAFT		
Cam height		
Intake	43 mm	42.9 mm
Exhaust	43 mm	42.9 mm
Journal O.D	Φ28	
Bearing oil clearance	0.02 ~ 0.061 mm	
End play	0.1 ~ 0.2 mm	

https://www.forkliftpdfmanuals.com/

Description	Specification	Limit
VALVE		
Stem O.D		
Intake	5.965 ~ 5.980 mm	
Exhaust	5.950 ~ 5.965 mm	
Thickness of valve head (Margin)		
Intake	1.15 mm	0.8 mm
Exhaust	1.35 mm	1.0 mm
Valve stem to guide clearance		
Intake	0.02 ~ 0.05 mm	0.1 mm
Exhaust	0.035 ~ 0.065 mm	0.13 mm
VALVE GUIDE		
Length		
Installed size	Intake : 46, Exhaust : 54.5	
Over size	0.05, 0.25, 0.50	
VALVE SEAT		
Seat angle	45°	
Over size	0.3, 0.6	
VALVE SPRING		
Free length	48.86 mm	
Load	18.3kg/39 mm	
	40.0kg/30.5 mm	
Installed height	39 mm	
Out-of squareness	1.5 mm or less	3°
CYLINDER BLOCK		
Cylinder I.D	82.00 ~ 82.03 mm	
Out-of cylindricity of cylinder I.D	Less than 0.01 mm	
Cylinder block-to-piston clearance	0.02 ~ 0.04	
PISTON		
O.D	81.97 ~ 82.00 mm	
Over size	0.25, 0.50, 0.75, 1.00	
PISTON RING		
Side clearance		
No.1	0.04 ~ 0.08 mm	0.1 mm
No.2	0.03 ~ 0.07mm	0.1 mm
End gap		
No.1	0.23 ~ 0.38 mm	
No.2	0.33 ~ 0.48 mm	1.0 mm
Oil ring side rail	0.2 ~ 0.6 mm	1.0 mm
Over size	0.25, 0.50, 0.75, 1.00	1.0 mm
CONNECTING ROD		
Bend	0.05 mm or less	
Twist	0.10 mm or less	
Side clearance	0.100 ~ 0.250 mm	0.4 mm

https://www.forkliftpdfmanuals.com/

Description	Specification	Limit
CONNECTING ROD BEARING		
Oil clearance	0.024 ~ 0.044 mm	
Under size	0.25, 0.50, 0.75	
CRANKSHAFT		
Pin O.D	45 mm	
Journal O.D	57 mm	
Bend	Less than 0.03 mm	
Out-of cylindricity of journal and pin	Less than 0.01 mm	
End play	0.06 ~ 0.260	
Under size of pin		
0.25	44.725 ~ 44.740 mm	
0.50	44.475 ~ 44.490 mm	
0.75	44.225 ~ 44.240 mm	
Under size of journal		
0.25	56.727 ~ 56.742 mm	
0.50	56.477 ~ 56.492 mm	
0.75	56.227 ~ 56.242 mm	
OIL PUMP		
O.D-to-front case clearance	0.12 ~ 0.185 mm	
Front side clearance		
Tip clearance	0.025 ~ 0.069 mm	
Outer gear	0.04 ~ 0.09 mm	
Inner gear	0.04 ~ 0.085 mm	
Oil pressure (Oil temperature 90°C~100°C)		
at idle (800rpm)	1.7kg/cm^2	
RELIEF SPRING		
Free height	43.8 mm	
Load	3.7kg/40.1 mm	
Cooling type	Water-cooled forced circulation system, Mechanical cooling pan	
Water pump type	Centrifugal impeller	
Thermostat type	Wax pellet type with jiggle valve	
Antifreeze viscosity	40%	
THERMOSTAT		
Valve open temperature	82°C ± 1.5°C	
Fully open temperature	95°C	
WATER TEMPERATURE SENSOR		
Type		
Resistance(at 20°C)	2.31KΩ ~ 2.59KΩ	

https://www.forkliftpdfmanuals.com/

TORQUE SPECIFICATIONS

Description	Standard (Kg·m)
Cylinder block	
Engine support bracket bolt and nut	3.5 ~ 5.0
Engine support bracket spare bolt	4.3 ~ 5.5
Oil pressure switch	1.3 ~ 1.5
Cylinder head	
Cylinder head bolt	
M10	2.5+(60°~ 65°) + (60°~ 65°)
M12	3.0+(60°~ 65°) + (60°~ 65°)
Intake manifold bolt and nut	1.6 ~ 2.3
Exhaust manifold nut	4.3 ~ 5.5
Cylinder head cover bolt	0.8 ~ 1.0
Camshaft bearing cap bolt	1.4 ~ 1.5
Rear plate bolt	0.8 ~ 1.0
Main moving	
Connecting rod cap nut	5.0 ~ 5.3
Crankshaft bearing cap bolt	2.7 ~ 3.3+(60°~ 65°)
Flywheel manual transmission bolt	12.0 ~ 13.0
Drive plate automatic transmission bolt	12.0 ~ 13.0
Timing belt	
Crankshaft pulley bolt	17 ~ 18
Camshaft sprocket bolt	10 ~ 12
Timing belt tensioner bolt	4.3 ~ 5.5
Timing belt idler bolt	4.3 ~ 5.5
Timing belt cover bolt	0.8 ~ 1.0
Front case bolt	2.0 ~ 2.7
Engine mounting	
Oil filter	1.2 ~ 1.6
Oil pan bolt	1.0 ~ 1.2
Oil pan drain plug	3.5 ~ 4.5
Oil screen	1.5 ~ 2.2
Oil seal case	1.0 ~ 1.2

https://www.forkliftpdfmanuals.com/

Description	Standard (Kg·m)
Thermostat inlet fitting nut	1.5 ~ 2.0
Thermostat housing mounting nut	1.5 ~ 2.0
Water pump mounting bolt	2.0 ~ 2.7
Alternator brace bolt	2.0 ~ 2.7
Water temperature sensor	2.0 ~ 4.0
Alternator support bolt and nut	2.0 ~ 2.5
Water pump pulley	0.8 ~ 1.0
Intake manifold and cylinder head bolt	1.6 ~ 2.3
Intake manifold cover and intake manifold bolt	1.8 ~ 2.5
Throttle body and Surge tank nut	1.5 ~ 2.0
Exhaust manifold and cylinder head bolt	4.3 ~ 5.5
Exhaust manifold cover and intake manifold bolt	1.5 ~ 2.0
Oxygen sensor and intake manifold bolt	5.0 ~ 6.0
Water pipe bracket bolt	1.2 ~ 1.5
Chain guide	0.8 ~ 1.0
Starter bolt	2.7 ~ 3.4
Heater protector	1.5 ~ 2.0

https://www.forkliftpdfmanuals.com/

SPECIAL TOOLS

Tool (number and name)	Illustration	Use
Crankshaft front oil seal installer (09214-32000)	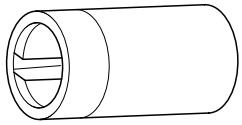 L4GC006A	Installation of front oil seal
Crankshaft front oil seal guide (09214-32100)	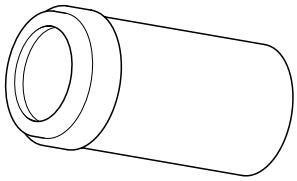 L4GC007A	Installation of front oil seal
Removal and installation of mounting bushing (09216-22000)	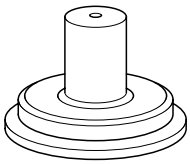 L4GC008A	Removal and installation of engine mounting bushing (Use with 09216-22100)
Valve clearance adjusting tool (09220-2D000)	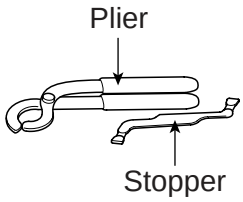 L4GC009A	Removal and installation of mechanical tappet shim
Camshaft oil seal installer (09221-21000)	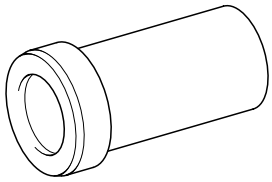 L4GC010A	Installation of camshaft oil seal

https://www.forkliftpdfmanuals.com/

Tool (number and name)	Illustration	Use
Valve guide installer (09221-22000(A/B))	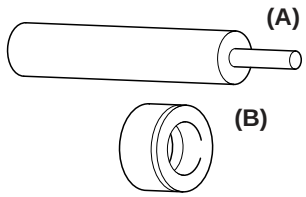 L4GC011A	Removal and installation of valve guide
Cylinder head bolt wrench (09221-32001)	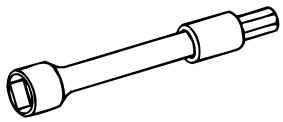 L4GC012A	Removal and tightening of cylinder head bolt
Valve stem oil seal installer (09222-22001)	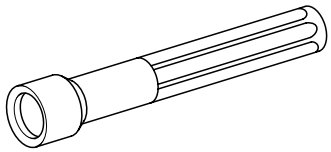 L4GC013A	Installation of valve stem oil seal
Valve spring compressor holder and adaptor (09222-28000, 09222-28100)	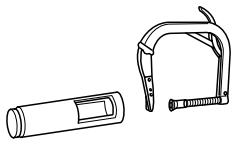 L4GC014A	Removal and installation of piston pin (Use with 09234-33003)
Valve stem seal remover (09222-29000)	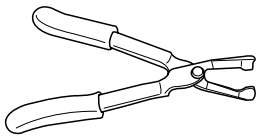 L4GC015A	Removal of valve stem seal

https://www.forkliftpdfmanuals.com/

Tool (number and name)	Illustration	Use
Crankshaft rear oil seal installer (09231-21000)	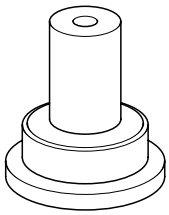 L4GC016A	1. Installation of engine rear oil seal 2. Installation of crankshaft rear oil seal
Piston pin removal and installation kit (09234-33001)	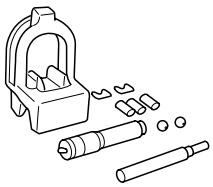 L4GC017A	Removal and installation of intake and exhaust valve (Use with 09222-29000)
Piston pin setting tool insert (09234-33003)	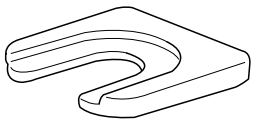 L4GC018A	Removal and installation of piston pin (Use with 09234-33001)

https://www.forkliftpdfmanuals.com/

TROUBLESHOOTING

Symptom	Possible cause	Remedy
Low compression	Cylinder head gasket damaged	Replace gasket
	Worn or damaged piston ring	Replace ring
	Worn piston or cylinder	Repair or replace piston and cylinder block
	Worn or damaged valve seat	Repair or replace valve and seat ring
Low oil pressure	Insufficient engine oil	Check engine oil level
	Oil pressure switch defective	Replace oil pressure switch
	Oil filter clogged	Install new filter
	Worn oil pump gear or cover	Replace
	Thin or diluted engine oil	Replace engine oil
	Oil relief valve clogged(Open)	Replace or inspect
	Excessive bearing clearance	Replace bearing
High oil pressure	Oil relief valve clogged(Closed)	Repair relief valve
Noisy valve	Thin or diluted engine oil	Replace engine oil
	Faulty HLA	Replace HLA
	Worn belt stem or valve guide	Replace belt stem or valve guide
Noisy connecting rod or timing belt	Insufficient engine oil	Check engine oil level
	Low oil pressure	Refer to "too low oil pressure"
	Thin or diluted engine oil	Replace engine oil
	Excessive bearing clearance	Replace bearing
Noisy timing belt	Incorrect belt tension	Correct belt tension
Low coolant level	Coolant leak from	
	Heater or radiator hose	Repair or replace parts
	Defective radiator cap	Retighten clamp or replace
	Thermostat housing	Replace gasket or housing
	Radiator	Replace
	Water pump	Replace parts
Radiator clogged	Foreign material into coolant	Replace coolant
Abnormally high coolant temperature	Thermostat defective	Replace parts
	Radiator cap defective	Replace parts
	Abnormal flow in cooling system	Clean or replace parts
	Loose or missing driving belt	Correct or replace
	Loose water pump	Replace
	Water temperature wiring defective	Repair or replace
	Cooling pan defective	Repair or replace
	Radiator or thermostat switch defective	Replace
	Inefficient coolant	Add coolant

https://www.forkliftpdfmanuals.com/

Symptom	Possible cause	Remedy
Abnormally low coolant temperature	Thermostat defective	Replace
	Water wiring defective	Repair or replace
Oil cooling system leak	Loose connecting part	Retighten
	Cracked or damaged hose, pipe, and oil cooler	Replace
Exhaust gas leak	Loose connecting part	Retighten
	Pipe or muffler damaged	Repair or replace
Abnormal noise	Breakaway exhaust plate in muffler	Replace
	Rubber hanger damaged	Replace
	Pipe or muffler with body Interfered	Repair
	Pipe or muffler damaged	Repair or replace
	Catalytic converter damaged	Replace
	Each connecting gasket damaged	Replace

https://www.forkliftpdfmanuals.com/

SERVICE AND ADJUSTING PROCEDURE

CHECKING ENGINE OIL

1. Be sure that the oil is between "F" and "L" marks of the dipstick.

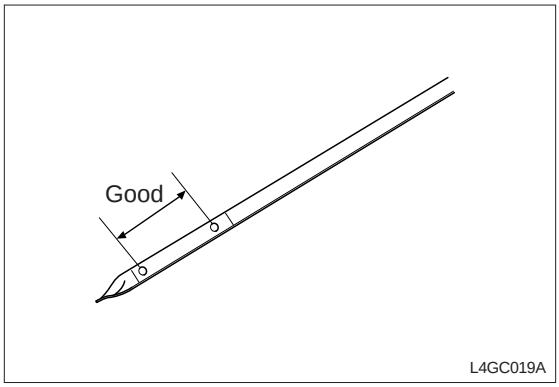

2. If the oil level is below "L" mark, add about 1L of oil.
3. Check contamination and viscosity of the engine oil and replace it if necessary.

CHECKING COMPRESSED PRESSURE

1. Prior to inspection, check that the engine oil, starter motor and battery are normal.
2. Start the engine and run it until the engine coolant temperature reaches 80 ~ 95°C).
3. Stop the engine and disconnect the spark plug cable and air cleaner element.
4. Remove the spark plug.
5. After opening the throttle valve completely, crank the engine to remove foreign material from the cylinder.

   CAUTION
   - ***At this time, necessarily screen the spark plug hole with a rag. Because hot coolant, oil, fuel, and other foreign material, being penetrated in the cylinder through cracks can come into the spark hole during checking compressed pressure.***
   - ***When cranking the engine to test compressed pressure, necessarily open the throttle valve before cranking.***
6. Install the compression gauge to the spark plug hole.

https://www.forkliftpdfmanuals.com/

7. With the throttle valve opened, crank the engine to measure the compressed pressure.

Standard(250~400rpm)	Standard	15kg/cm^2
	Limit	14kg/cm^2

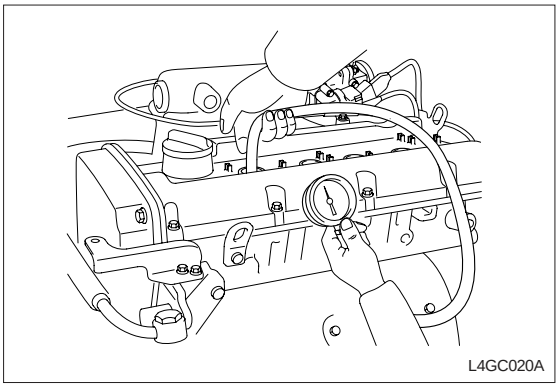
L4GC020A

8. Follow the procedures (no.6-7) to each cylinder and check that compressed pressure values of all cylinders are within the limit.

Limit	1.0kg/cm^2

9. If any of all cylinders is out of limit, add a small amount of engine oil to the spark plug hole, and re-proceed the procedures (no.6-7) to the cylinder.
   At this time, if the compressed pressure is increased, it means that the piston, piston ring or cylinder surface are worn or damaged, and if the compressed pressure is decreased, it means that the valve is clogged, the valve contact is faulty, or the pressure leaks through gasket.

   CAUTION
   If a large amount of incomplete combustion gasoline comes into the catalytic converter, emergency such as a fire can occur due to overheating. So this job should be done quickly with the engine not operated.

https://www.forkliftpdfmanuals.com/

ADJUSTING TIMING BELT TENSION

Adjust the tension as the following order.

1. Turn the steering wheel completely counterclockwise.
2. While the engine oil pan is supported with a wooden block, raise the vehicle using a jack.

   CAUTION
   At this time carefully raise the vehicle not to overload parts.
3. Remove the pan drive tension pulley.
4. Loosen the timing belt upper cover bolt(B) and disconnect the upper cover(A).

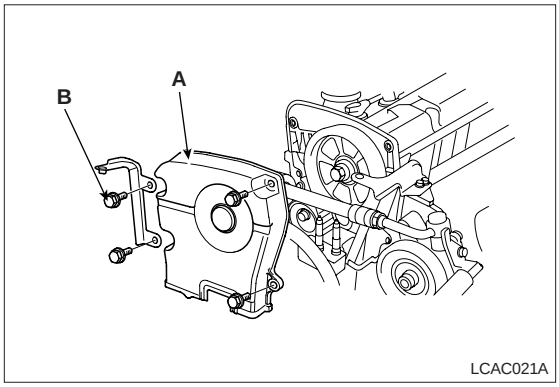

5. As the illustration, insert the hex wrench to the adjuster groove and turn it counterclockwise to move the arm indicator in the middle of the base groove.

   CAUTION
   If it is turned in reverse direction, be sure that the tensioner may function abnormally.

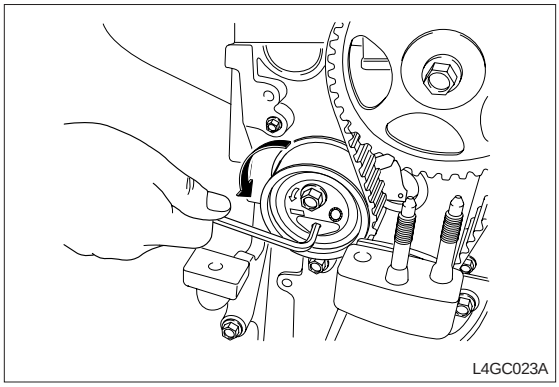

6. Tighten the tensioner fixing bolt with the arm indicator fixed.

Tightening torque	2.3~2.9kgf·m

7. Rotate the crankshaft 2 turns clockwise and make sure the auto tensioner arm indicator is placed in the middle of the base groove.
8. If the arm indicator is out of the middle, loosen the bolt and repeat the previous procedure.
9. Install the timing belt upper cover(A) and tighten the bolt (B).

Tightening torque	0.8~1.0kg·m

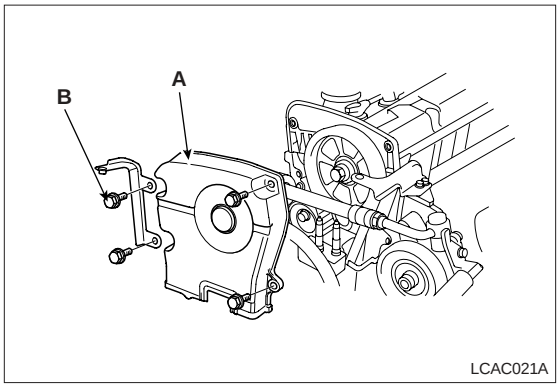

https://www.forkliftpdfmanuals.com/

TROUBLESHOOTING

1. Checking coolant leaks

   1) After the coolant temperature drops below 38°C loosen the radiator cap.

   2) Check that the coolant level reaches filler neck.

   3) Install the radiator cap tester to the radiator filler neck and apply a pressure of 1.4kg/cm^2 .
   While maintaining it for 2 minutes, check the radiator, hose, and connecting part for leak.

      CAUTION
      - ***Because the coolant in the radiator is too hot, never open the cap when it hot, or injury may occur due to an outburst of hot water.***
      - ***Dry out the inspection part.***
      - ***When removing the tester, take care not to spill the coolant.***
      - ***When removing/installing the tester as well as testing, take care not to deform the filler neck.***

   4) Replace parts if leak is detected.

2. Density test

   1) Measure density of the coolant using a hydrometer.

   2) After measuring the coolant temperature, calculate density using the following table of temperature and density.

3. Temperature and density of coolant

Temperature and density of coolant (Temp.:℃)					Freezing point(℃)	Normal operating temperature(℃)	Coolant temperature
10	20	30	40	50			
1.054	1.050	1.046	1.042	1.036	-16	-16	30%
1.063	1.058	1.054	1.049	1.044	-20	-20	35%
1.071	1.067	1.062	1.057	1.052	-25	-25	40%
1.079	1.074	1.069	1.064	1.058	-30	-30	45%
1.087	1.082	1.076	1.070	1.064	-36	-36	50%
1.095	1.090	1.084	1.077	1.070	-42	-42	55%
1.103	1.098	1.092	1.084	1.076	-50	-50	60%

https://www.forkliftpdfmanuals.com/

CAUTION

- ***If the coolant contains less than 30% of antifreeze, anticorrosion is decreased.***
- ***If the coolant contains more than 60% of antifreeze, the engine will be fatally affected, resulting from decreased anti-freezing and engine cooling.***

Use only the recommended antifreeze and do not mix with other production.

4. Recommended antifreeze

Recommended antifreeze	Ethylene glycol

CHECKING AND ADJUSTING DRIVE BELT TENSION

1. Checking tension

   1) Press the middle of the water pump pulley and alternator pulley with 10Kg·f.

   2) Inspect the belt deflection by pressing it.

   3) If the belt deflection is out of the standard, adjust it as follows.

Item	Standard	
	New belt	Used belt
Drive belt deflection (L)	4.0~4.4mm	5.1~5.7mm

https://www.forkliftpdfmanuals.com/

2. Using a tension gauge

   1) Type
      ① BORROUGHS BT - 33 - 73F
      ② NIPPONDENSO BTG - 2

   2) How to use
      ① Insert the belt between the gauge hook and spindle and press the tension gauge handle.
      ② Leave the handle and read the gauge.

Tension(T)	Standard	
	New belt	Used belt
	65~75kg	40~50kg

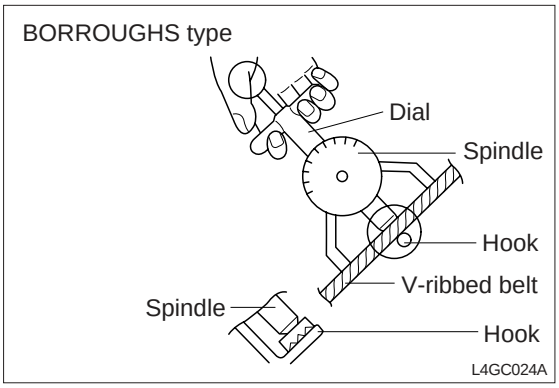

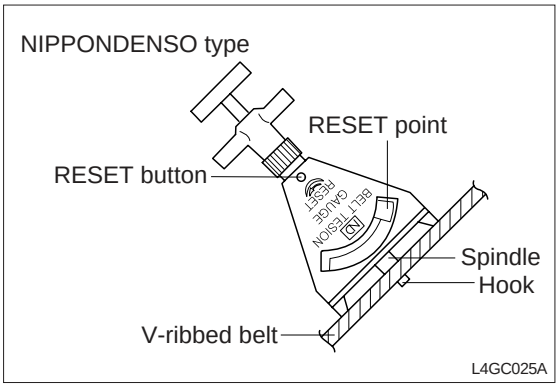

CAUTION
- ***The belt used over 5 minutes should be adjusted as used belt of standard.***
- ***Check that the belt is installed correctly.***
- ***When the belt is loosened, slip noise is heard.***

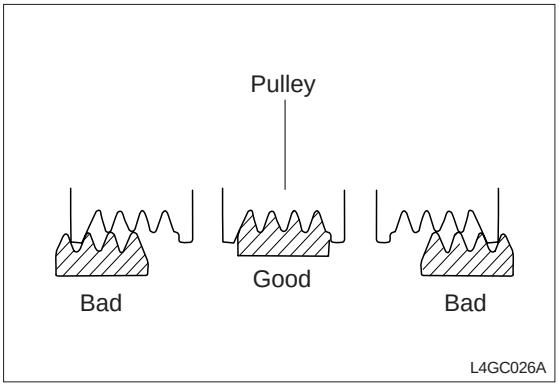

ADJUSTING

1. Loosen the alternator support bolt "A" nut and adjusting lock bolt "B".
2. Adjust the belt tension by moving the alternator brace adjusting bolt to "T" direction.

Alternator adjusting lock bolt "B"	1.2~1.5kg·m
Alternator support bolt "A"	2~2.5kg·m

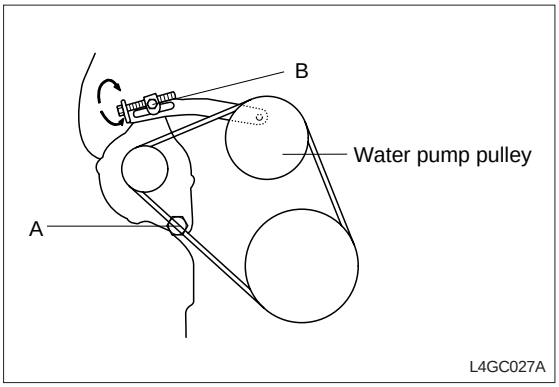

https://www.forkliftpdfmanuals.com/

3. Tighten the bolt "A" and then tighten "B" to the specified torque.

CAUTION

- ***If the belt tension is too excessive, noise as well as early wear of belt occurs and the water pump bearing and alternator bearing are damaged.***
- ***If the belt is too loose, due to early wear of belt and insufficient power of alternator, battery and water pump become inefficient and finally engine is overheated or damaged.***

CHECKING BELT FOR DAMAGE

Check the following items and replace the belt if defective.

1. Check the belt surface for damage, wear and crack.
2. Check the belt surface for oil or grease contamination.
3. Check the rubber part for wear or hardening.
4. Check the pulley surface for crack or damage.

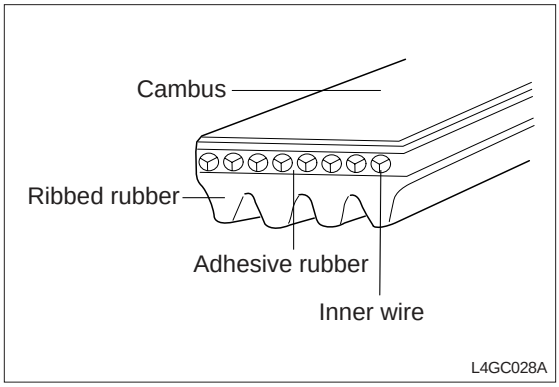

https://www.forkliftpdfmanuals.com/

CYLINDER BLOCK

COMPONENTS

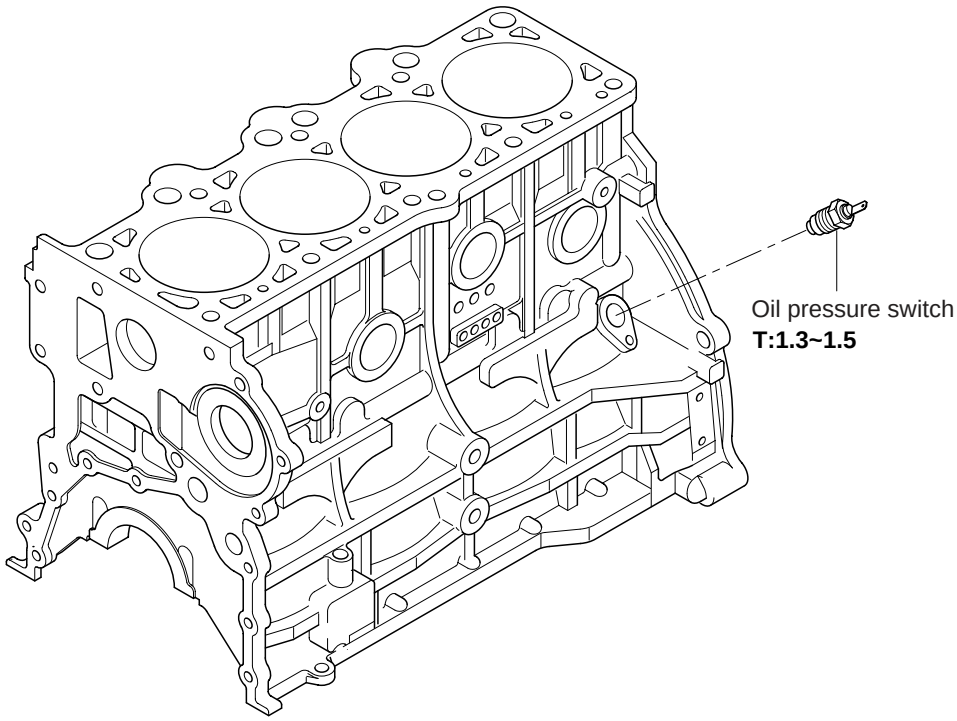

Tightening torque: kg·m

L4GC029A

REMOVAL

1. Remove the cylinder head, timing belt, front case, flywheel and piston.
2. Remove the oil pressure switch.

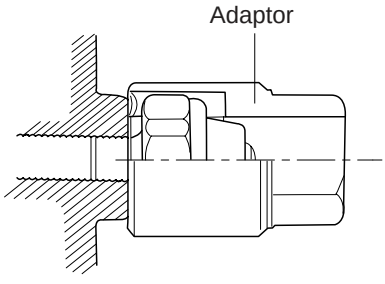

L4GC030A

https://www.forkliftpdfmanuals.com/

INSPECTION

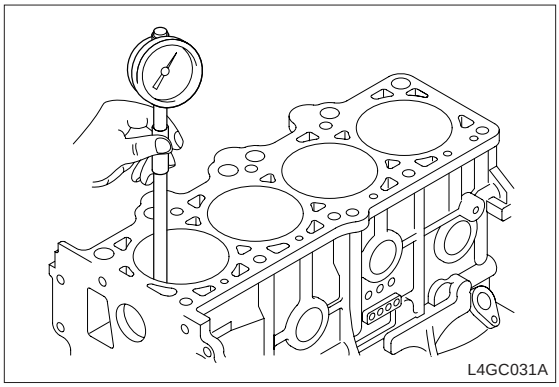
L4GC031A

CYLINDER BLOCK

1. Inspect the cylinder block for scratch, fur and rust visually, check for invisible crack or other deformation using a proper tool and repair or replace if necessary.
2. Measure flatness of the cylinder block upper surface using a straight edge and a thickness gauge. When measuring, the cylinder block upper surface should be flat without a fragment.

Flatness	0.03mm or less
Parallelism	0.15mm or less

3. Measure the cylinder bore towards A and B directions at 3-point height using a cylinder gauge. If the cylinder bore is larger than standard and the cylinder wall is scratched or furred excessively, bore and hone the cylinder block and install a new oversize piston and ring.

Cylinder I.D	82.00 ~ 82.03mm
Cylinder I.D cylindricity	0.01mm

4. If the top ridge is partially worn, cut it with a ridge reamer.
5. There are 4 kinds of oversize piston.

Items	Size
0.25 OS	0.25mm
0.50 OS	0.50mm
0.75 OS	0.75mm
1.00 OS	1.00mm

6. To bore the cylinder bore to the oversize, maintain the clearance between oversize piston and bore and use the same size of pistons. When measuring the piston O.D, measure flatness of the skirt thrust surface at 47mm below from the piston top land.

Clearance between piston and cylinder	0.02 ~ 0.04mm

https://www.forkliftpdfmanuals.com/

INSTALLATION

Install the following parts in order.

1. Crankshaft
2. Flywheel
3. Piston
4. Cylinder head

https://www.forkliftpdfmanuals.com/

FRONT CASE, OIL PUMP

COMPONENTS

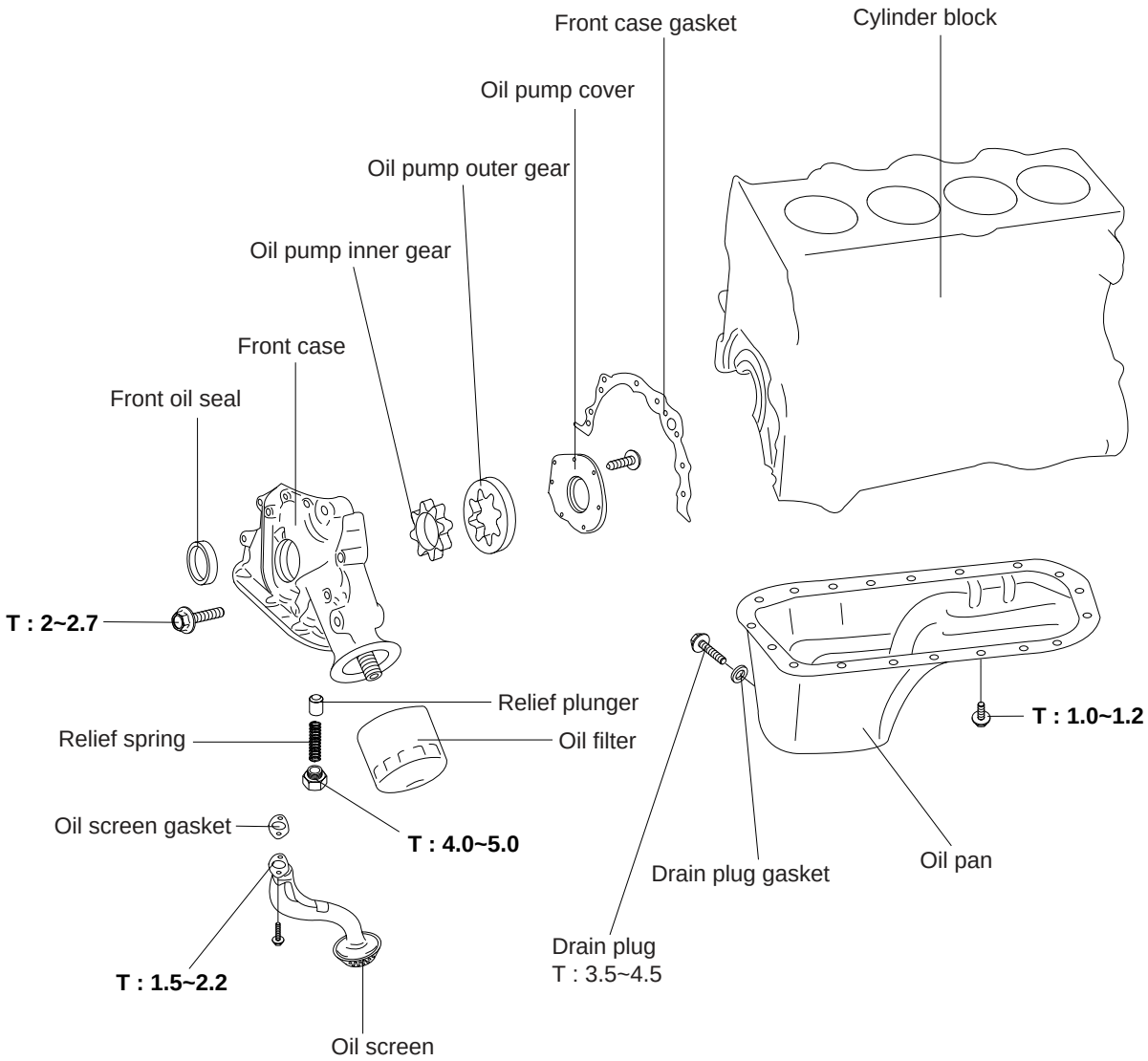

Tightening torque: kg·m

L4GC032A

https://www.forkliftpdfmanuals.com/

REMOVAL

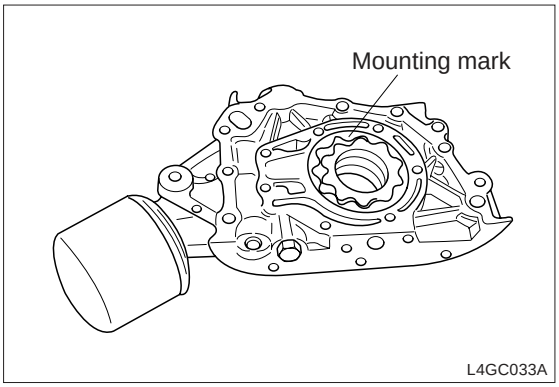

1. Remove the timing belt.
2. Remove all oil pan tightening bolts.
3. Separate the oil pan from the cylinder block by tapping on the oil pan with a rubber hammer and then remove the oil pan.

   NOTE
   If the oil pan is raised by a screwdriver, it can be deformed.

4. Remove the oil screen.
5. Remove the front case assembly.
6. Remove the oil pump cover.
7. Remove the inner and outer gears from the front case.
8. Remove the plug and then remove the relief spring and relief valve.

INSPECTION

FRONT CASE

1. Check the front case for crack and damage and replace if necessary.
2. Check the front oil seal for wear and damage and replace it defective.

OIL SEAL AND OIL SCREEN

1. Check the oil pan for defect, damage and crack and replace if necessary.
2. Check the oil screen for defect, damage and crack and replace if necessary.

FRONT CASE AND OIL PUMP COVER

Check the gear contact surface for wear(especially a partial wear) and damage.

https://www.forkliftpdfmanuals.com/

OIL PUMP GEAR

1. Check the gear tooth surface for wear and damage.
2. Measure clearance between the outer gear and front case.

Item		Standard
Body clearance		0.12 ~ 0.185mm
Tip clearance		0.025 ~ 0.069mm
Side clearance	Outer gear	0.04 ~ 0.09mm
	Inner gear	0.04 ~ 0.085mm

3. Check clearance between the outer gear tooth end and inner gear tooth end.

[Body clearance]

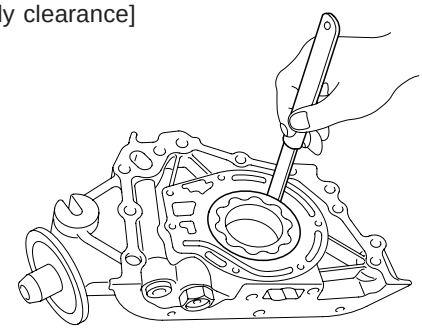

L4GC034A

[Tip clearance]

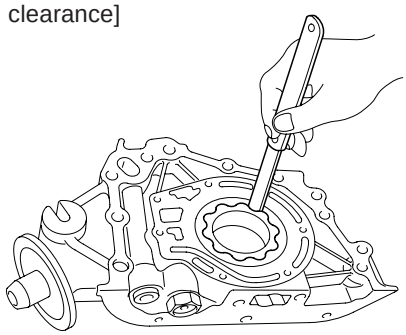

L4GC035A

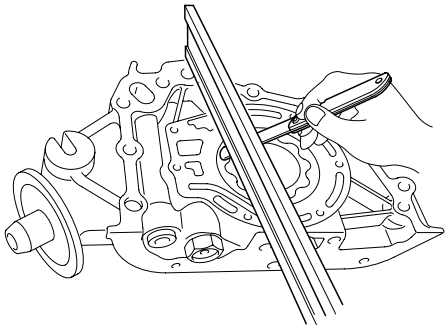

L4GC036A

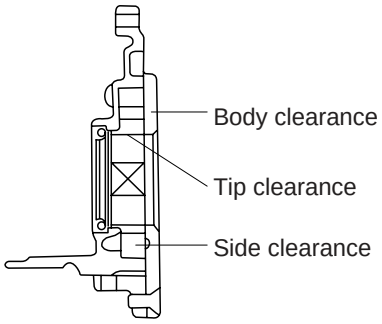

L4GC037A

https://www.forkliftpdfmanuals.com/

RELIEF VALVE AND SPRING

1. Check the relief valve inserted in the front case for perturbation.
2. Check the relief spring for deformation or damage.

Free height	43.8mm
Load	3.7kg/40.1mm

INSTALLATION

OIL PUMP

1. Install the outer and inner gears to the front case.
2. After installing the oil pump cover, tighten the bolt to the specified torque. After tightening the bolt, check that the gear rotates smoothly.

Oil pump cover bolt	0.6 ~ 0.9kg·m

3. Install the relief valve and spring and after tightening the plug to the specified torque, apply engine oil to the relief valve.

Relief valve plug	4.0 ~ 5.0kg·m

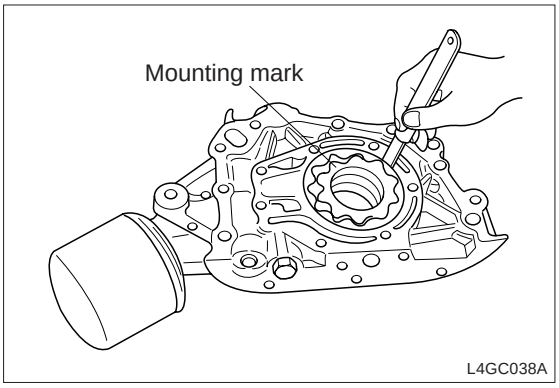

https://www.forkliftpdfmanuals.com/

FRONT CASE

1. Install the gasket and front case assembly and tighten the bolt to the specified torque.

Items		Values
Bolt length	A	25mm
	B	20mm
	C	45mm
	D	38mm
Specified torque		2.0 ~ 2.7kg·m

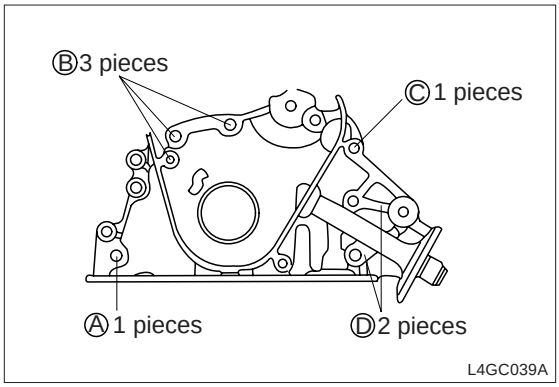

OIL SEAL

1. Install the special tool "crankshaft oil seal guide(09214-32100)" to the front end of the crankshaft. After applying engine oil to the outer surface of the oil seal guide, insert a new oil seal through the guide until it reaches the front case by hand.

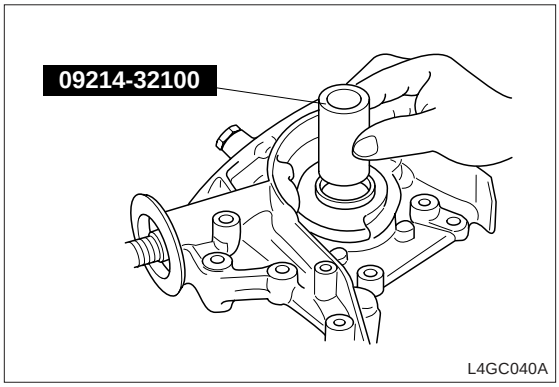

2. Install the oil seal using the special tool "crankshaft oil seal installer(09214-32000)" (in parallel with front case).

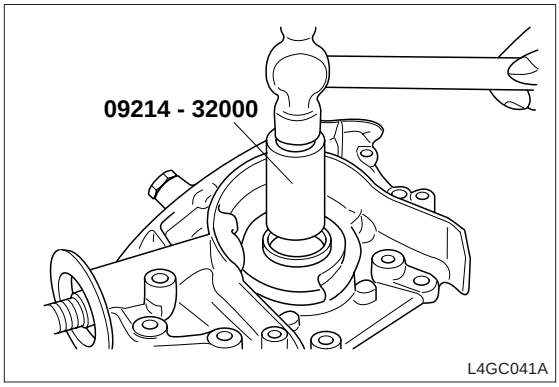

3. Install the crankshaft sprocket, timing belt, and crankshaft pulley.
4. Install the oil screen.
5. Refer to "oil pan gasket and cylinder block gasket".
6. Apply sealant to the oil pan flange groove as shown in the illustration.

CAUTION
Apply sealant as a thickness of about Φ4mm.
Before 15 minutes is passed after applying sealant, install the oil pan.

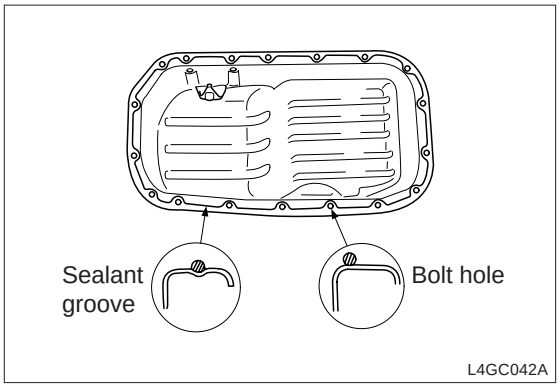

https://www.forkliftpdfmanuals.com/

7. Install the oil pan and tighten the bolt to the specified torque.

Oil pan bolt	1.0 ~ 1.2kg·m

https://www.forkliftpdfmanuals.com/

MAIN MOVING SYSTEM

CAMSHAFT, HLA, TIMING CHAIN, CHAIN GUIDE

COMPONENTS

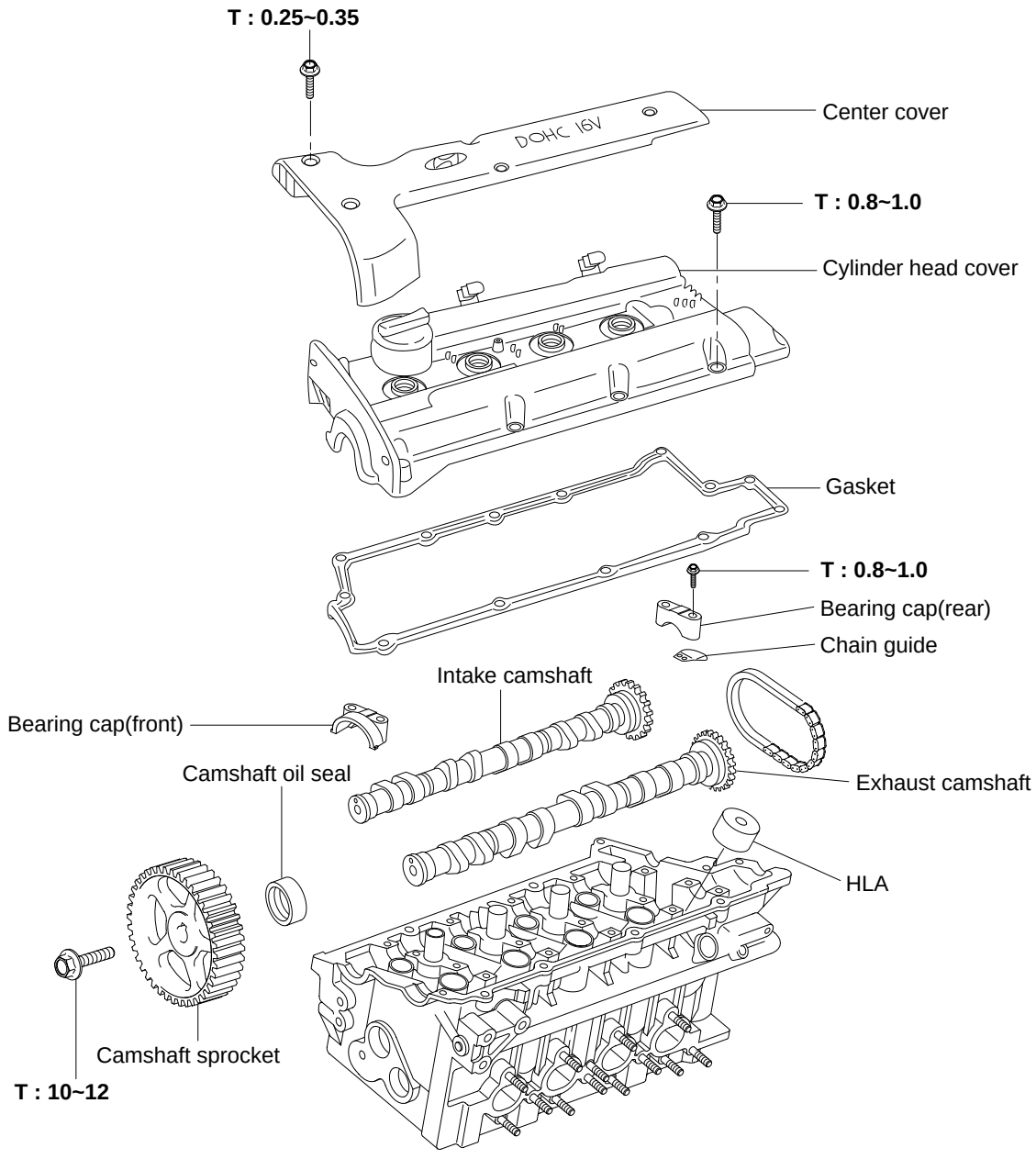

Tightening torque : kg·m

L4GC043A

https://www.forkliftpdfmanuals.com/

REMOVAL

1. Remove the breeder hose and P.C.V hose.
2. Remove the center cover.
3. Remove the ignition coil and spark plug.
4. Remove the timing belt upper cover.

5. Remove the cylinder head cover.

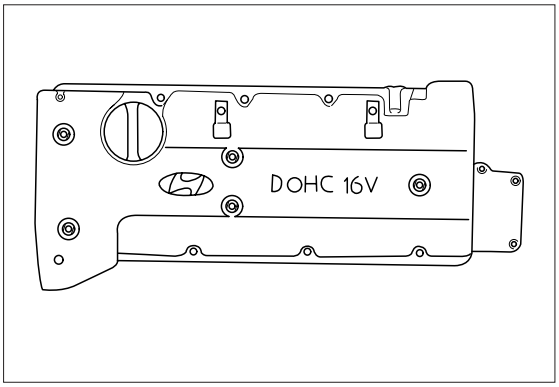

6. Remove the tensioner.
7. Loosen the camshaft sprocket bolt and remove the camshaft sprocket.
8. Loosen the bearing cap bolt and after removing the bearing cap, remove the camshaft.

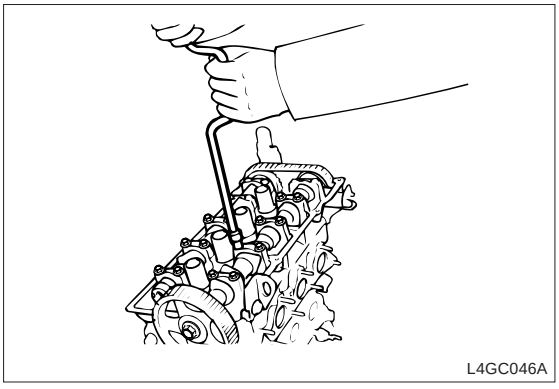

9. Remove the timing chain.
10. Remove the HLA.

https://www.forkliftpdfmanuals.com/

INSPECTION

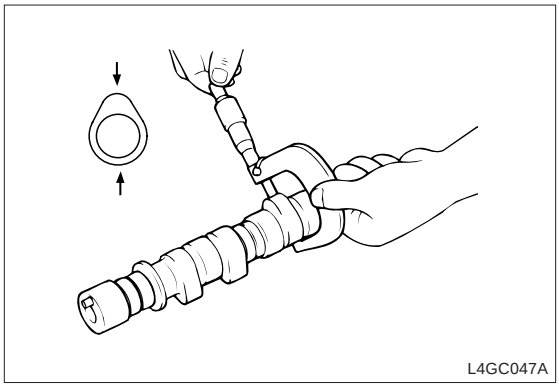
L4GC047A

CAMSHAFT

1. Check the camshaft journal for wear and if the journal is seriously worn, replace the camshaft.
2. Check the cam lobe for damage and if the lobe is severely damaged or worn, replace the camshaft.

Items		Standard	Limit
Cam height	Intake	43	42.9
	Exhaust	43	42.9

3. Check the cam surface for abnormal wear and damage and replace it if necessary.
4. Check the cylinder head camshaft journal for damage and if the surface is severely damaged, replace the cylinder head assembly.
5. Lightly put the camshaft on the cylinder head as shown in the illustration and after installing a dial gauge towards shaft, check the endplay.

Camshaft endplay	0.1 ~ 0.2mm

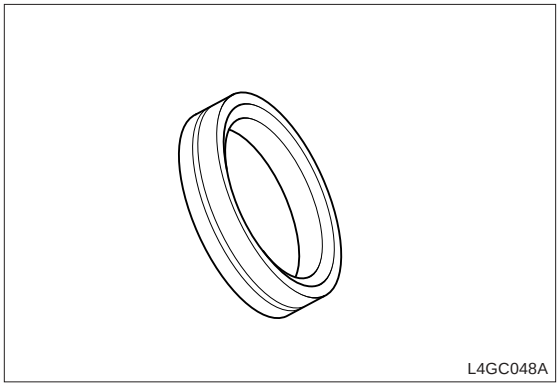
L4GC048A

OIL SEAL

1. Check the oil seal surface for wear and if the seal lip portion is worn, replace it.
2. Check the camshaft oil seal lip contact surface for partial wear and replace it if necessary.

HLA(Hydraulic Lash Adjuster)

1. HLA I.D : Φ33(-0.025/-0.041)
2. How to remove noise when it heard from valve
   1) Prior to engine warm-up, check that the engine oil level is normal.
   2) Warm-up the engine.
   3) If the valve noise is heard at engine warm-up, air-bleed the system.
   4) How to air-bleed
      a) During remaining it for 10 minutes at 3,000 rpm and over 5 minutes at idle, check that the valve noise is heard.
      b) Repeat the above step(a) only once or twice.

https://www.forkliftpdfmanuals.com/

5) If the valve noise is still heard after following the above step 4), replace the hydraulic lash adjuster(HLA) which makes noise.
6) If the valve noise is heard after replacing parts, neces sarily repeat the above step 4).
7) After air-bleeding the system and replacing parts to remove noise, if the valve noise is re-heard 2-3 days after, it might be affected from defective HLA, so re place the defective HLA.

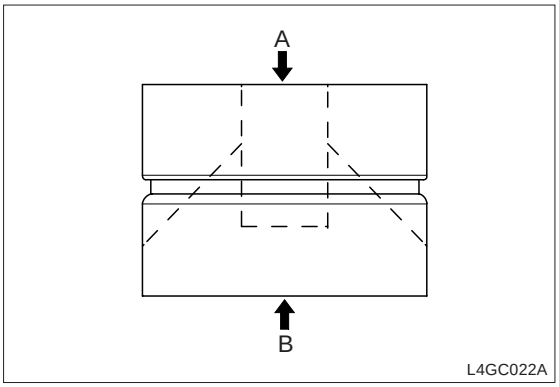

NOTE

In case of the vehicle with HLA, when initially starting the engine, it is normal if valve noise is momentarily heard.

CAUTION

1) Because HAL is precision parts, take care not to come foreign materials such as a dust from outside.
2) Do not disassemble HLA.
3) When cleaning HLA, use clean diesel oil.
4) Take care not to make scratches and sharp edges to O.D of HLA.
5) With HLA filled with engine oil, grasp A and press B by hand as shown in the illustration, if the HLA is moving, replace the HLA.

3. Loosen the center cover bolt and remove the center cover.
4. Remove the oil filler cap.

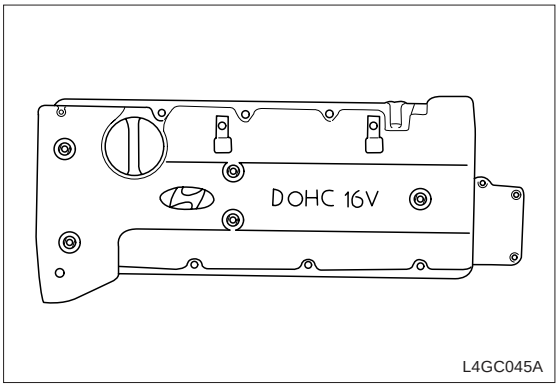

5. Remove the timing belt upper cover.

https://www.forkliftpdfmanuals.com/

6. Remove the cylinder head cover.
   1) Disconnect the spark plug cable.
   2) Disconnect the PCV hose and intake hose.
   3) Disconnect the accelerator cable.
   4) Remove the cylinder head cover and gasket.

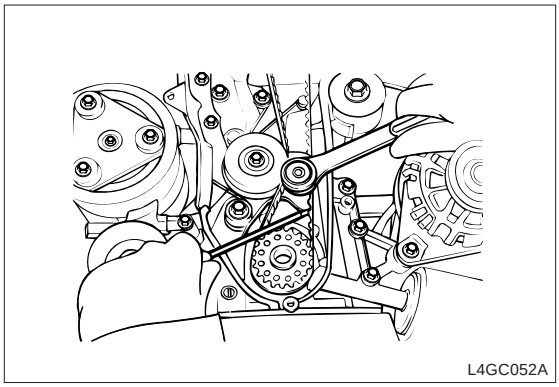
L4GC052A

7. Place the cylinder no.1 to the dead point.
   1) Rotate the crankshaft pulley so as to align it with "T" mark on the timing belt low cover.

   2) Check that the camshaft timing pulley hole is aligned with timing mark on the bearing cap.
      If it is not aligned, readjust it by rotate the crankshaft to 360° .

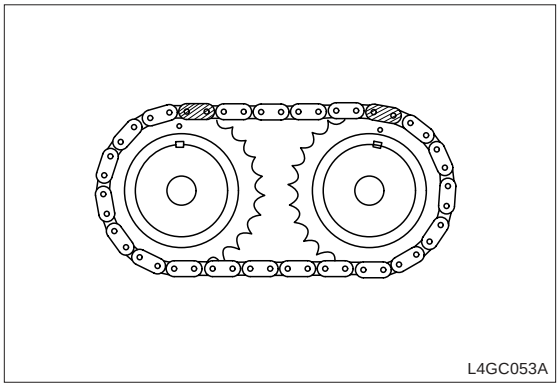
L4GC053A

https://www.forkliftpdfmanuals.com/

6. Check the valve gap.

   1) Measure the gap between the camshaft and valve lift using a gauge.

Valve gap (Engine coolant temperature : 20°)

Intake	0.12 ~ 0.28mm
Exhaust	0.20 ~ 0.36mm

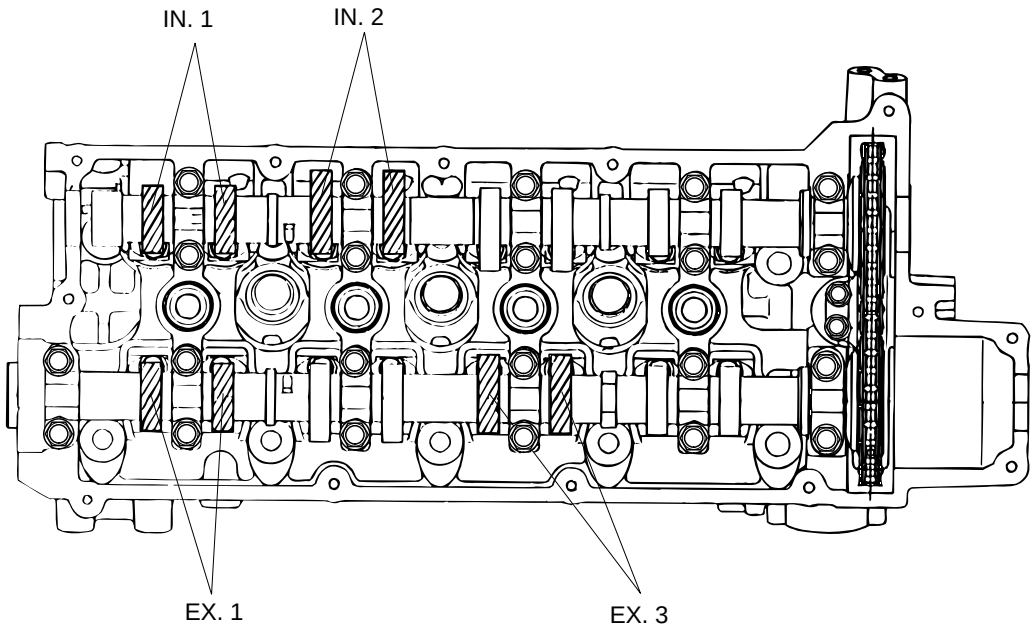

Adjusting valve at no.1 compression dead point

L4GC054A

https://www.forkliftpdfmanuals.com/

2) Rotate the crankshaft pulley so as to align it with "T" mark on the timing belt low cover.

3) Check the valve gap.

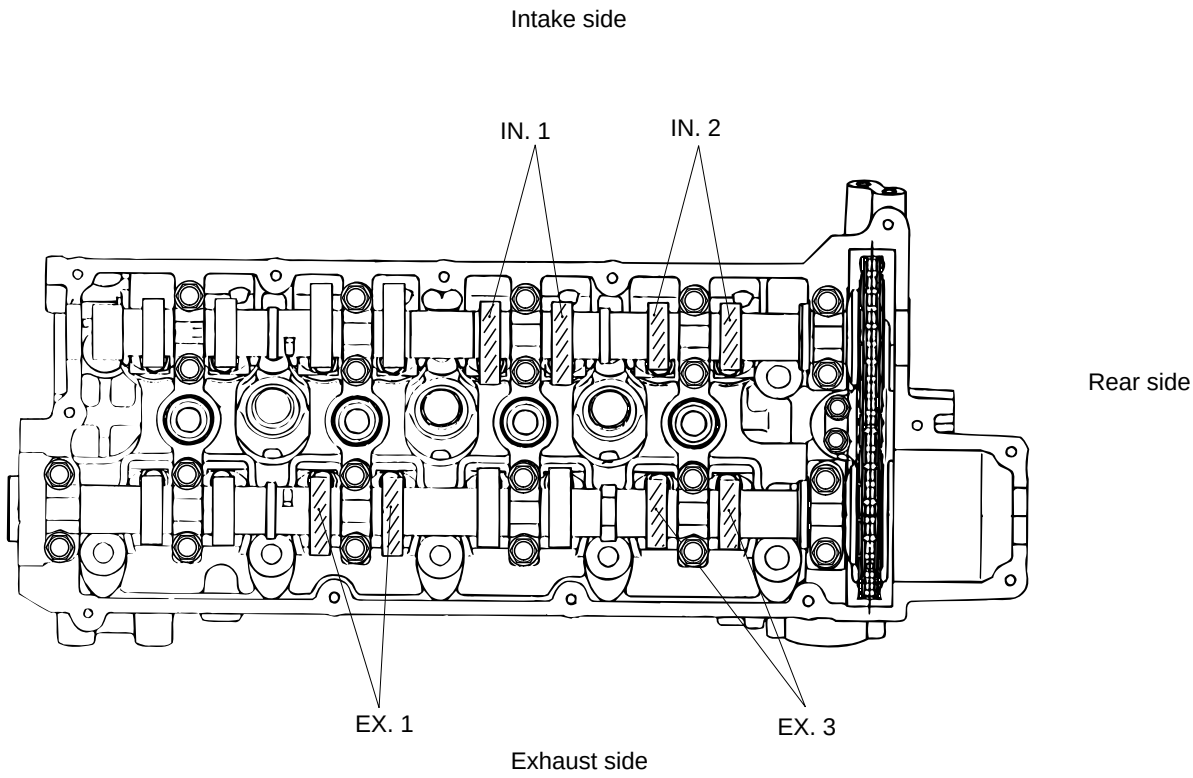

Adjusting valve at no.1 compression dead point

L4GC055A

7. Adjust the gap between the intake and exhaust valves.

1) Rotate the crankshaft so as to place the cam lobe on the adjustable valve camshaft upward.

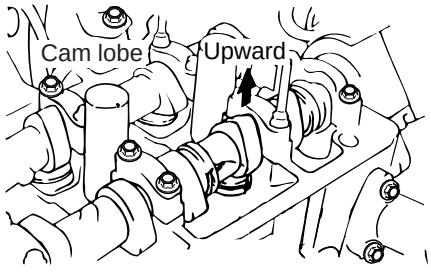

L4GC056A

https://www.forkliftpdfmanuals.com/

2) Using the special tool(09222-2D000), press the valve liter downward and install the stopper between the cam shaft and valve lifter.

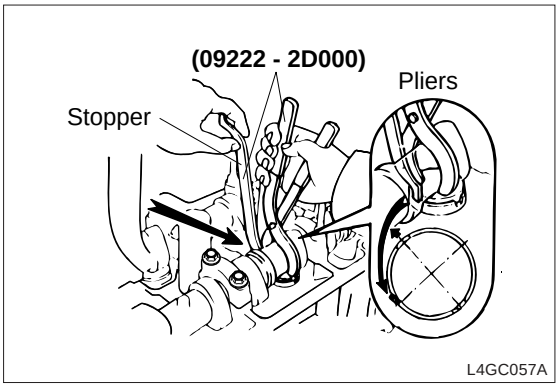

3) Remove the adjusting shim using a small screwdriver and a magnet.

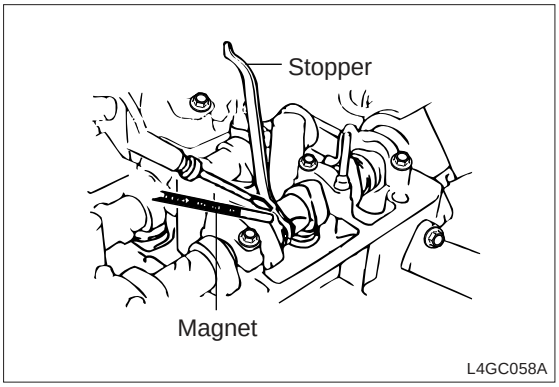

4) Using a micrometer, measure thickness of the removed shim.

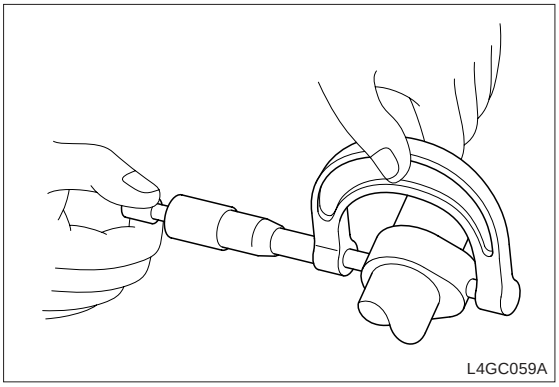

5) Calculate thickness of new shim to be valve gap within the specified value.
T: Thickness of removed shim
A: Measured valve gap
N: Thickness of new shim
Intake : N=T+(A-0.20mm)
Exhaust : N=T+(A-0.28mm)

NOTE
There are 20 shims up to 2.0mm at intervals of 0.04mm.

https://www.forkliftpdfmanuals.com/

6) Install a new adjusting shim.

7) After measuring the valve gap, check that it is within the specified values.

Valve gap (Engine coolant temperature: 20°)

Intake	0.12 ~ 0.28mm
Exhaust	0.20 ~ 0.36mm

REASSEMBLY

1. After cleaning sealant remnants of the cylinder head and cylinder head cover, apply new sealant(LOCTITE NO.5999).

CAUTION
Don't apply sealant too much, to prevent it from coming out.

https://www.forkliftpdfmanuals.com/

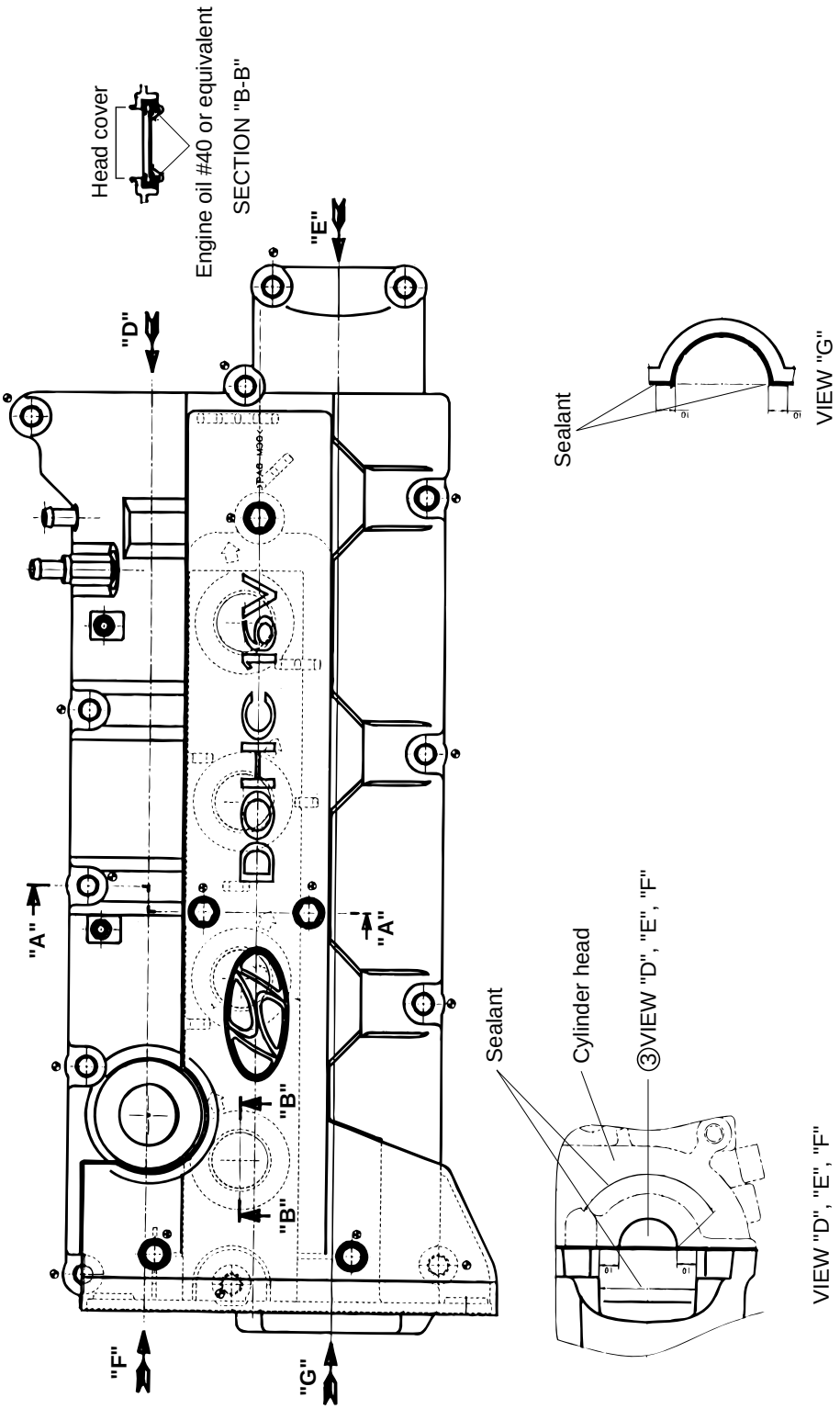

L4GC060A

https://www.forkliftpdfmanuals.com/

2. Install the cylinder head cover.

Cylinder head cover	0.8 ~ 1.0kg·m

3. Connect the accelerator cable.
4. Connect the PCV hose and intake hose to the head cover.
5. Connect the spark plug cable.
6. Install the timing belt upper cover.
7. Install the center cover.

Center cover	0.25 ~ 0.35kg·m

https://www.forkliftpdfmanuals.com/

4. Timing chain

   1) Check the timing chain bushing and plate portion for wear and if those are severely worn, replace those.

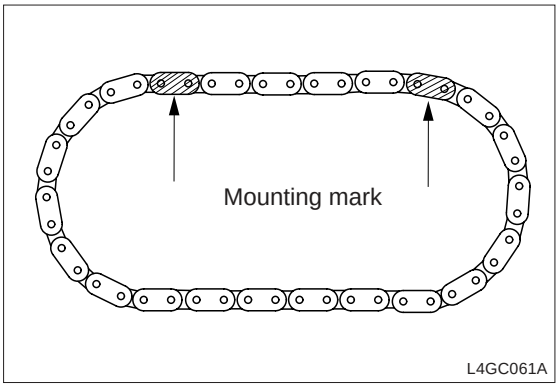

INSTALLATION

1. Install HLA

   CAUTION
   Tappet and shim should be installed to the original position.

2. After Installing the intake and exhaust camshaft by aligning it with the timing mark on the timing chain sprocket, install the camshaft to the cylinder head.

   CAUTION
   - ***Apply engine oil to the camshaft journal and cam.***
   - ***There a detective pin for TDC sensor in the intake camshaft rear end and a dowel pin in the intake camshaft front end.***

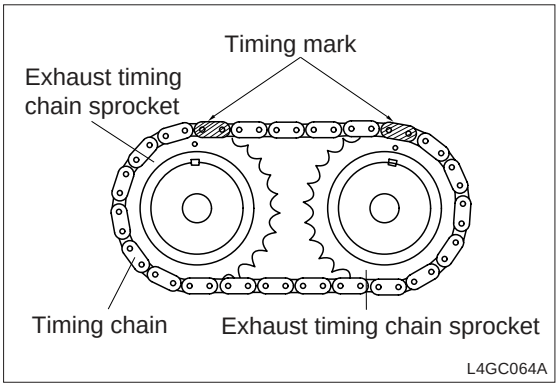

3. Install the camshaft cap.
   Check the intake and exhaust identification marks.(Check cap number and arrow and take care not to change the bearing cap position and direction.)
   I: Intake camshaft
   E: Exhaust camshaft

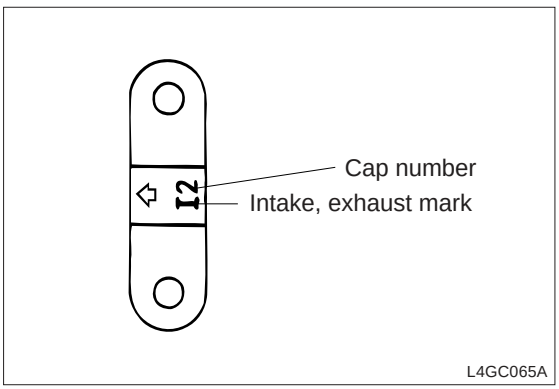

https://www.forkliftpdfmanuals.com/

4. Check that the camshaft is smoothly turned by hand. After checking, remove the bearing cap and camshaft and install MLA.
5. Check that the dowel pin on the exhaust camshaft sprocket is installed upward.

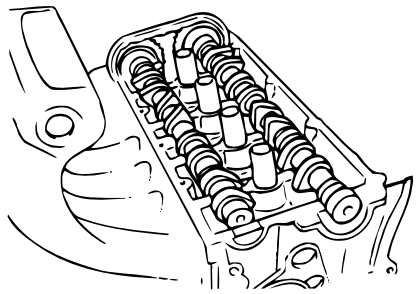
L4GC066A

6. Tighten the bearing cap to the specified torque by tightening bolts 2-3 times as shown in the illustration.

Bearing cap bolt	1.4 ~ 1.5kg·m

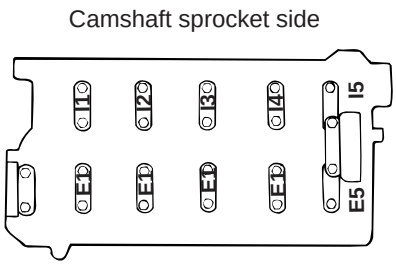

L4GC067A

7. Using the special tool "camshaft oil seal installer and guide", press the camshaft oil seal. Necessarily apply engine oil to the oil seal lip. Insert the oil seal through the camshaft front end and install it by tapping on the installer with a hammer until the oil seal reaches 8.5mm from the camshaft front end.

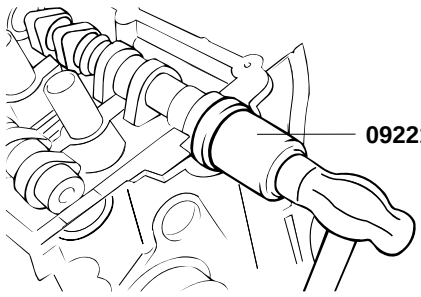

L4GC068A

8. Install the camshaft sprocket to the specified torque.

Camshaft sprocket bolt	10 ~ 12kg·m

CAUTION
Align the timing marks on the camshaft sprocket and the crankshaft sprocket. At this time piston no. 1 cylinder should be placed on the compression dead point.

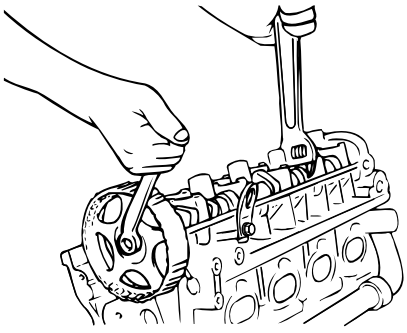
L4GC069A

https://www.forkliftpdfmanuals.com/

9. Install the cylinder head cover. Apply sealant as shown in the illustration.

Cylinder head cover	0.8 ~ 1.0kg·m

Apply engine oil to the oil seal lip to help install the cylinder head cover oil seal to the spark plug pipe smoothly.

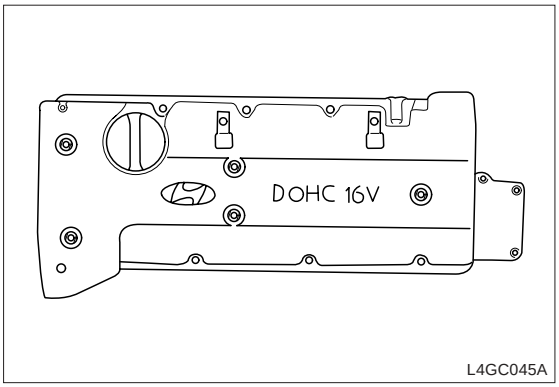

L4GC045A

CAUTION

- ***Necessarily tighten the cylinder head cover bolt to the specified torque.***
  If it is tightened too much, the head cover can be deformed resulting in oil leaks and the head cover bolt can be broken resulting in cylinder head replacement.
- ***When installing after head cover removing, necessarily apply sealant to the head cover rear and front portion.***
- ***Because the head cover is made of plastic, take care not to drop tools on the head cover upper portion when removing/installing the engine parts.***
- ***When installing after head cover removing, after checking the head gasket for damage, reuse it if it is normal.***
- ***When applying/draining engine oil, take care not to spill oil on the head cover upper surface, if oil is spilled, wipe it out completely with a paper and a rag.***

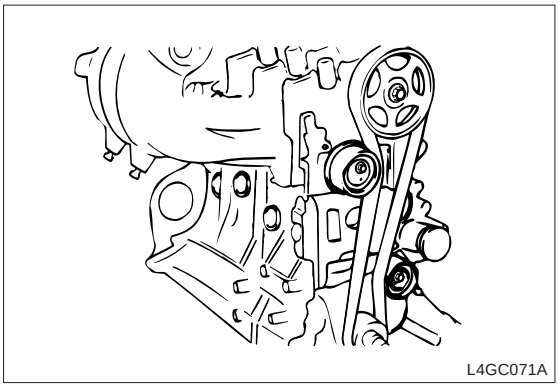
L4GC071A

10. Install the timing belt.
11. Install the timing belt cover.

Cylinder head cover	0.8 ~ 1.0kg·m

12. Install the spark plug center cover.

https://www.forkliftpdfmanuals.com/

CRANKSHAFT

COMPONENTS

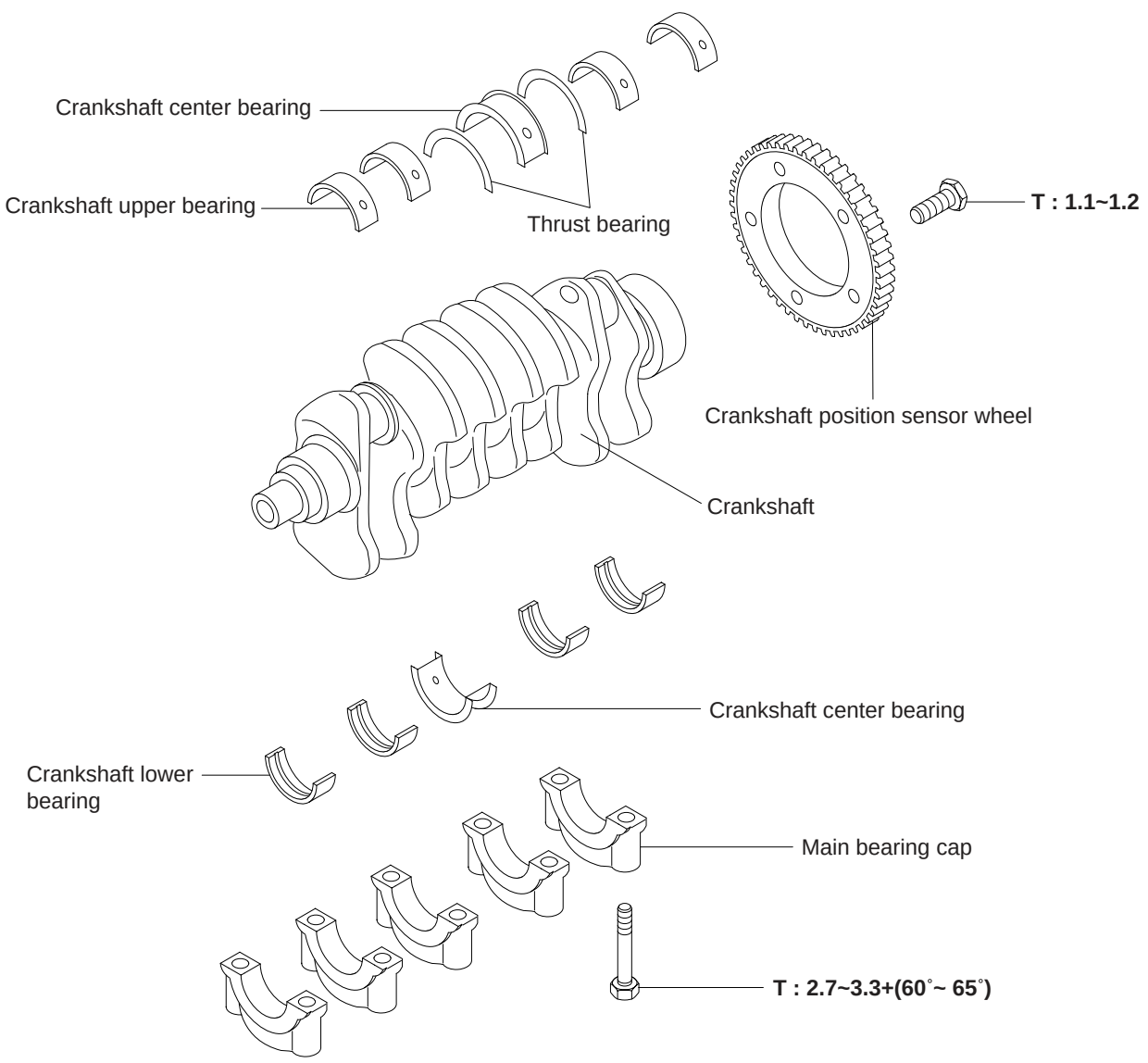

Tightening torque : kg·m

L4GC072A

https://www.forkliftpdfmanuals.com/

DISASSEMBLY

1. Remove the timing belt train, front case, flywheel, cylinder head assembly, and oil pan.
2. Remove the rear plate and rear oil seal.
3. Disconnect the connecting rod cap.
4. Remove the main bearing cap. (Arrange it in order)
5. Remove the crankshaft.
6. Disassemble the crankshaft position sensor wheel.

NOTE
Put an identification mark on the main bearing cap to refer to the original position and direction.

INSPECTION

1. Crankshaft
   1) Check the oil hoe for clogging as well as crankshaft journal pin for damage, uneven wear and crack. Repair or replace parts if necessary.
   2) Inspect "out of circularity" of the crankshaft journal taper and pin.

Crankshaft journal O.D	57mm
Crank pin O.D	45mm
Out of circularity of crankshaft journal pin	0.01mm or less

2. Main bearing and connecting rod bearing
   Visually inspect each bearing for scratch, melting, sticking, and fault contact and replace the bearing if necessary.

https://www.forkliftpdfmanuals.com/

3. Measuring oil clearance

   1) Measure O.D of the crankshaft journal and pin.
   2) Measure diameter of the crankshaft bore and connecting rod bore.
   3) Measure the thickness of the crankshaft and connecting rod bearing.
   4) Calculate clearance by subtracting O.D of the journal pin and thickness of the bearing from diameter of the bore.

Journal oil clearance	0.028 ~ 0.048mm
Pin oil clearance	0.024 ~ 0.044mm

Main bearing cap bolt	2.7 ~ 3.3kg·m+(60° ~ 65°)
Connecting rod cap bolt	5.0 ~ 5.3kg·m

4. Oil seal
   Check the front and rear oil seal and replace it with new parts if necessary.

ASSEMBLY

1. After checking the sensor wheel for damage and crack, replace it if necessary.
2. Inspect the clearance between the sensor wheel and crank position sensor.

Clearance between sensor wheel and crank position sensor	0.5 ~ 1.1mm

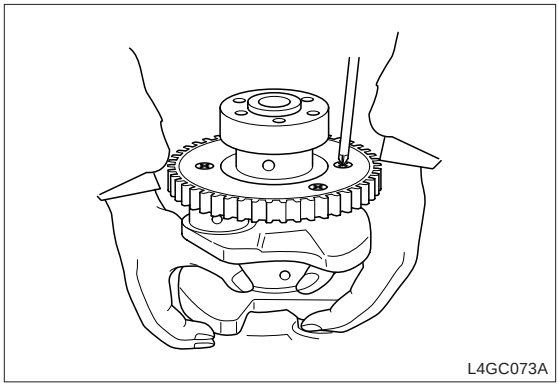
L4GC073A

If the clearance is out of specified values, check the sensor wheel for balancing and the crank position sensor for installation and replace those if necessary.

CAUTION
Sensor wheel as one of the electronic control affects performance if deformed or damaged, so be careful when handling it.

3. Install the upper main bearing to the cylinder block. When reusing the main bearing, refer to the identification mark during assembly.
4. Install the bearing shaft and apply engine oil to the journal and pin.

https://www.forkliftpdfmanuals.com/

5. Install the bearing cap and tighten the cap bolt to the specified torque from the center in order.
   (Tighten the bearing cap bolts to the specified torque by tightening bolts step by step 2-3 times equally)

Main bearing cap bolt	2.7 ~ 3.3kg·m+(60° ~ 65°)
Connecting rod cap bolt	5.0 ~ 5.3kg·m

   When installing the cap, proper number of cap should be installed as well as arrow mark should be directed to the engine crank pulley.

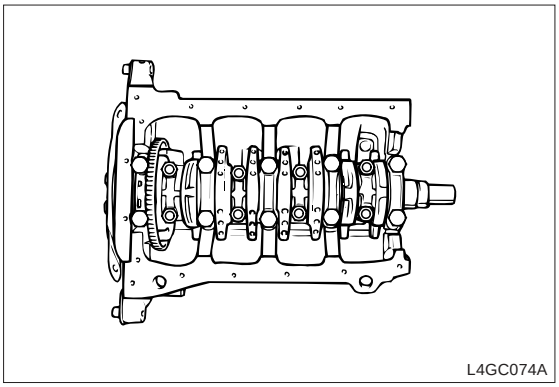
L4GC074A

6. Check that the crankshaft for free rotation and proper clearance between the center main bearing thrust flange and connecting rod big-end bearing.

Crankshaft end-play	0.06 ~ 0.260mm

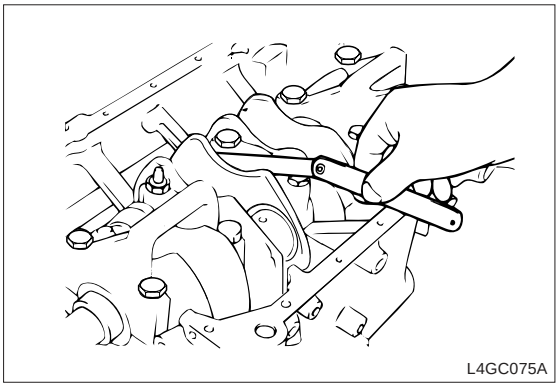
L4GC075A

7. Using the special tool "Crankshaft oil seal installer (09231-21000)", fully insert the oil seal into the crankshaft rear oil seal case.

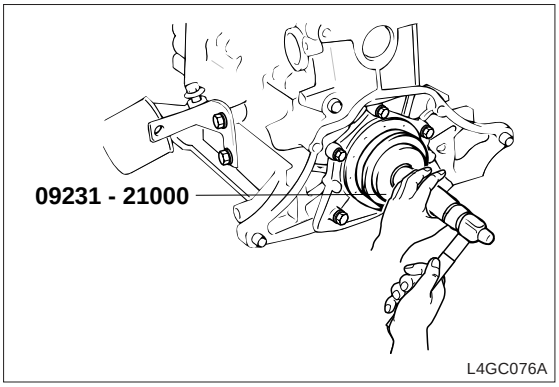

L4GC076A

8. Install the rear oil seal case and gasket and tighten 5 bolts. When installing, apply engine oil to the oil seal round and crankshaft.
9. Install the rear plate.
10. Install the flywheel, front case, oil pan, and timing belt train.

https://www.forkliftpdfmanuals.com/

FLYWHEEL & HOUSING

COMPONENTS

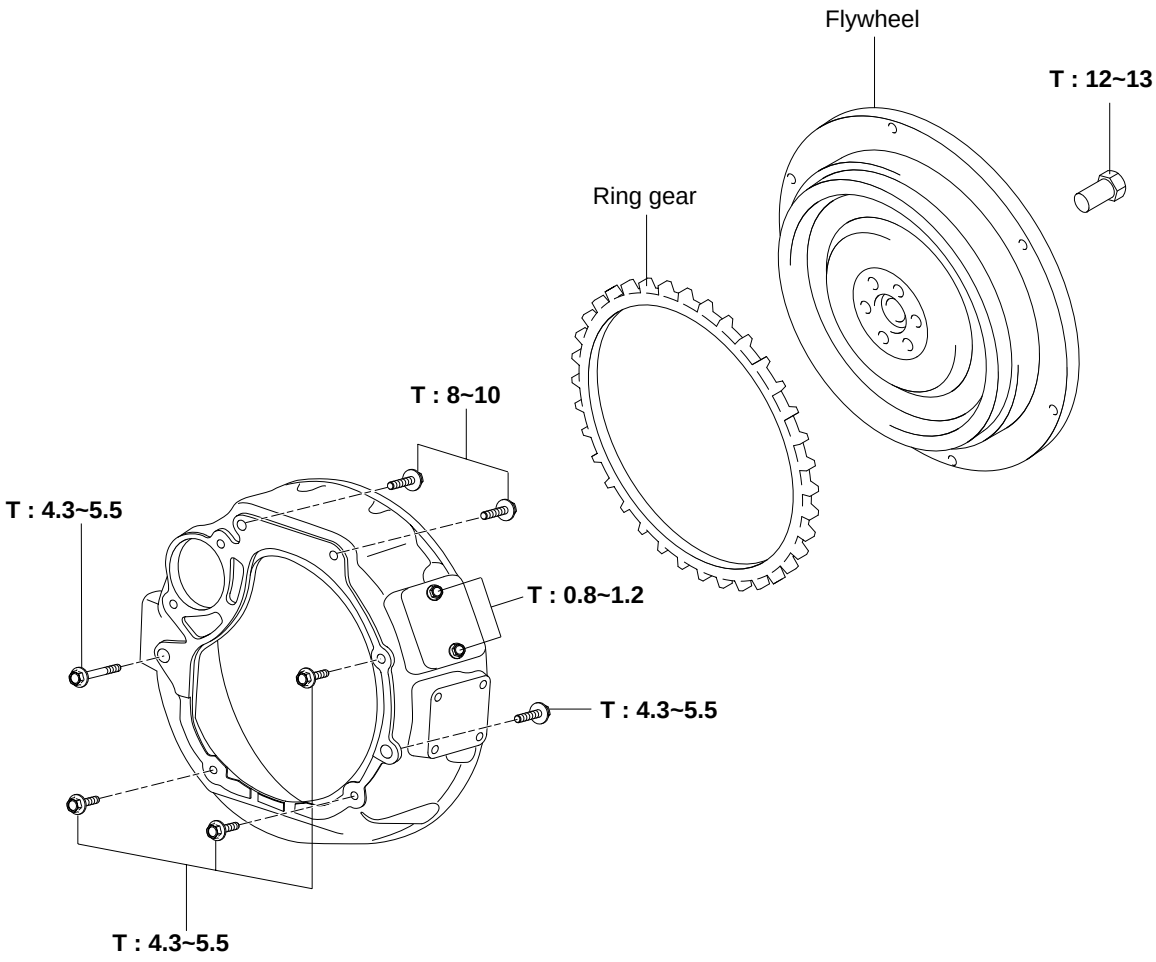

Tightening torque : kg·m

L4GC077A

REMOVAL

1. Remove the flywheel.
2. Remove the flywheel housing.

https://www.forkliftpdfmanuals.com/

INSPECTION

1. Check the ring gear for damage and crack and replace it if necessary.

ASSEMBLY

1. Install the flywheel housing and tighten the bolt to the specified torque.
2. Install the flywheel assembly and tighten the bolt to the specified torque.

Flywheel bolt	12 ~ 13kg·m

https://www.forkliftpdfmanuals.com/

PISTON AND CONNECTING ROD

COMPONENTS

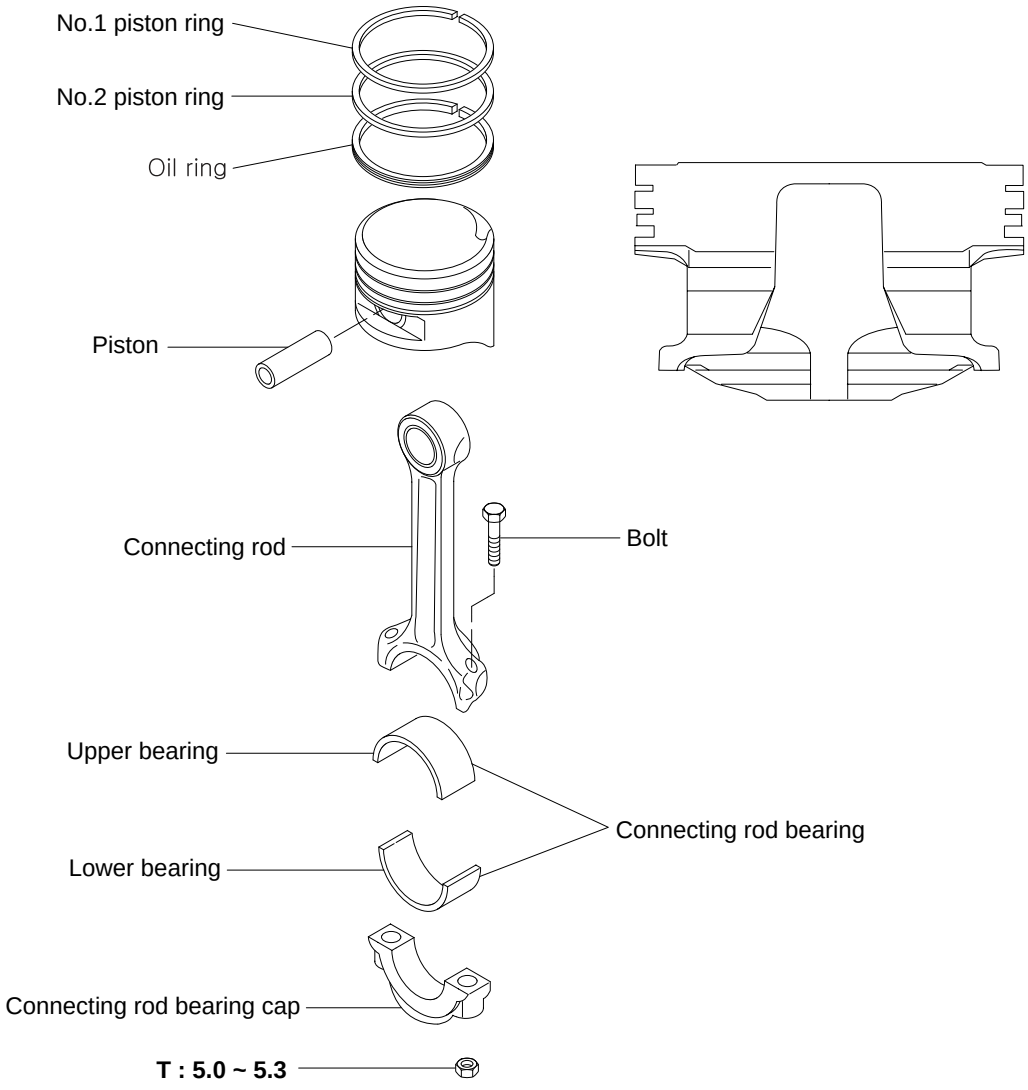

Tightening torque : kg·m

L4GC078A

https://www.forkliftpdfmanuals.com/

DISASSEMBLY

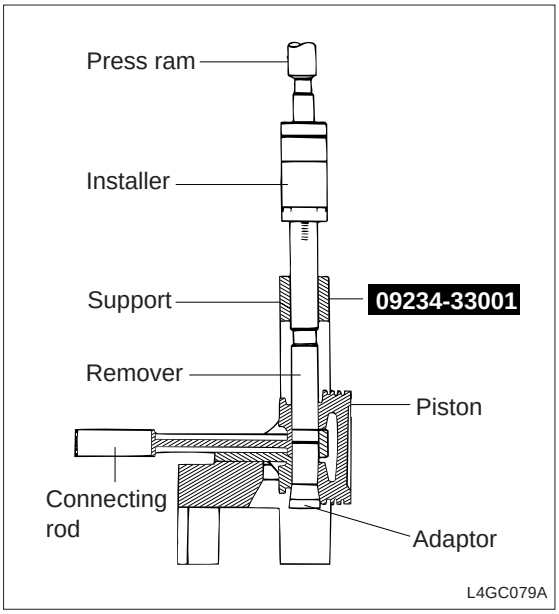

1. Remove the cylinder head assembly.

   NOTE
   Put an identification mark on the connecting rod and cap before disassembly to refer to the original position and direction.

2. Remove the oil pan and remove the oil screen.
3. After removing the connecting rod cap, remove the piston and connecting rod assembly from the cylinder. Arrange the connecting rod bearing in cylinder number order.
4. Using the special tool "piston pin setting tool (09234-33001)", disassemble the piston from the connecting rod as below.
   1) Remove the piston ring.
   2) When placing the assembly on a press, face the front mark on the piston upward.
   3) Using the press, remove the piston pin.

INSPECTION

PISTON AND PISTON PIN

1. Check the piston for scratch, wear, etc. and replace it if necessary.
2. Check the piston ring for break, damage and abnormal wear and replace it if necessary. When replacing the piston, the ring should be replaced also.
3. Check that the piston pin is inserted in the piston hole and replace the piston and pin if necessary.
   Piston should be smoothly pressed at normal room temperature.

PISTON RING

1. When measuring the side clearance of piston ring, if the measured value is out of the limit, insert a new ring to the ring groove and re-measure the side clearance.

Item		Specified value	Limit
Side clearance of piston ring	No.1	0.04 ~ 0.08mm	0.1mm
	No. 2	0.03 ~ 0.07mm	0.1mm

https://www.forkliftpdfmanuals.com/

2. To measure the end gap of piston ring, insert the piston ring to the cylinder bore. At this time, smoothly insert the ring to the piston so as to place the ring and cylinder wall to right position.
   After this, smoothly insert the ring to the piston.
   And then, pull out the piston upward and measure gap using a feeler gauge. When the gap exceeds the limit, replace the piston ring.

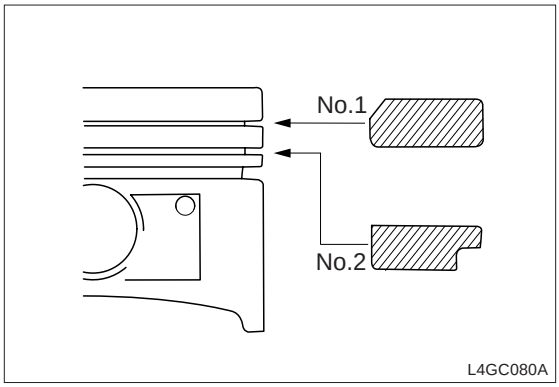

Item	Specified value	Limit
No.1 piston ring end gap	0.23 ~ 0.38	1mm
No.2 piston ring end gap	0.33 ~ 0.48	1mm
Oil ring end gap	0.20 ~ 0.60	1mm

When just replacing the ring without correction of cylinder bore, place the ring to the cylinder lower part where less worn-out and measure the gap.
When replacing the ring, use the same size of ring.

Item		Mark
Piston ring over size	STD	None
	0.25mm OS	25
	0.50mm OS	50
	0.75mm OS	75
	1.00mm OS	1.00

NOTE
Size mark is placed on the top of the ring.

CONNECTING ROD

1. When installing the connecting rod cap, refer to the cylinder numbers on the rod end cap which are marked during disassembly.
   When installing a new connecting rod, align the bearing with the notch.
2. If both end thrust surfaces of the connecting rod are damaged, partially worn, or the inside of small end is too rough, replace the connecting rod.

https://www.forkliftpdfmanuals.com/

3. Using a connecting rod aligner, measure bending and torsion of rod and if the measured value is around the limit, correct the rod with a press.
   But when the rod is severely bended or damaged, necessarily replace it.

Bending of connecting rod	0.05mm
Torsion of connecting rod	0.1mm

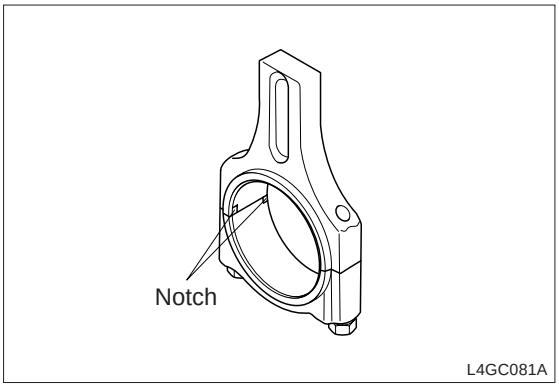

ASSEMBLY

1. Using the special tool "piston pin setting tool (09234-33001)", assemble the piston and connecting rod as below.
   1) Apply engine oil to the outer surface of the piston pin and small end bore of the connecting rod.

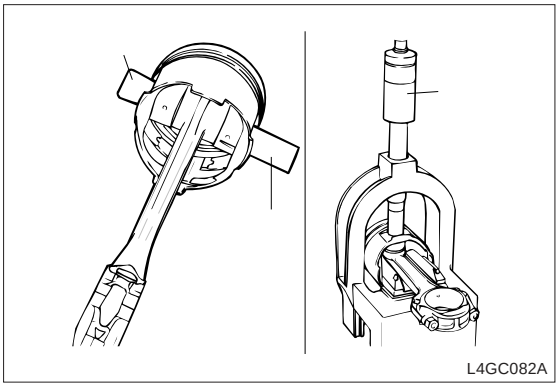

   2) With the front mark faced upward, fix the connecting rod and piston and insert it into the piston pin assembly.

Front mark

Piston side	0 (engraved)
Connecting rod side	Number (embossed)

   3) Using a press, press-fit the piston pin into the pin hole with the specified pressure on the pin end through the push rod.
   If the pressure is required more than the specified value, follow the next step.

Press-fit pressure of piston pin	350 ~ 1350kg

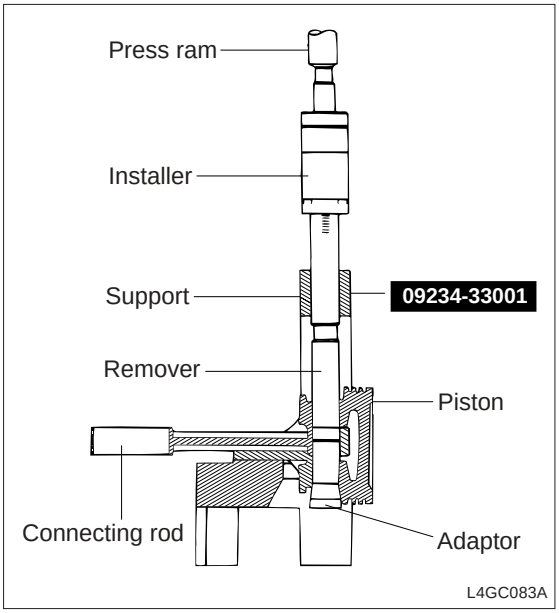

https://www.forkliftpdfmanuals.com/

4) Rotate the push rod to a half turn, remove the piston connecting rod assembly from the support.

5) After press fitting the piston pin, check that the connecting rod for smooth slip and free movement.

2. Install the piston ring to the piston in the following order.

1) Install 3 pieces of oil ring. Install the spacer lower side rail and upper side rail in order.
When installing the side rail, do not use a piston ring expander to expand gap as usual because the side rail is broken. After placing one end of the side rail between the piston ring groove and spacer, grasp the lower side securely and press the side rail to the position by hand as shown in the illustration.
At this time, after installing the lower side rail, install the upper side rail.

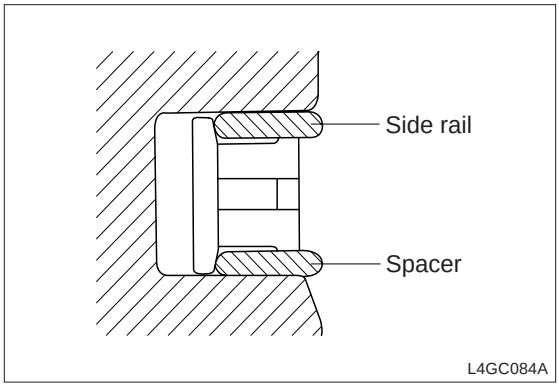

CAUTION

- ***After installing 3 pieces of oil ring, check the upper and lower side rails for smooth rotation.***
- ***The spacer expander gap should be away from the rail gap to 45° or more.***

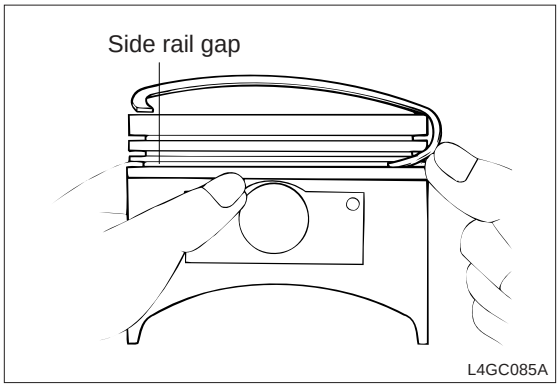

https://www.forkliftpdfmanuals.com/

2) After installing no.2 piston ring, install no.1 piston ring.

CAUTION

- ***Face the size mark and manufacturer mark on the ring surface upward when installing the piston ring.***
- ***Take care not to change no.1 and no.2 piston rings.***

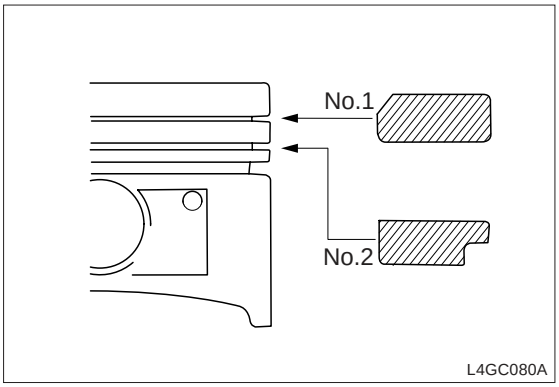

3. Using a piston ring clamp, insert the piston and connecting rod assembly as the cylinder number into the cylinder and face the arrow mark on the piston head toward the engine crankshaft pulley.
   Install a vinyl cover to the cap bolt not to damage the cylinder bore and crank pin.

CAUTION

- ***Be sure that the piston ring gap is same as shown in the illustration. If the piston ring gap is normal, gaps are not aligned with direction of piston and thrust and each gap is away from gaps as far as possible.***
- ***Apply enough engine oil to the piston and piston ring round.***

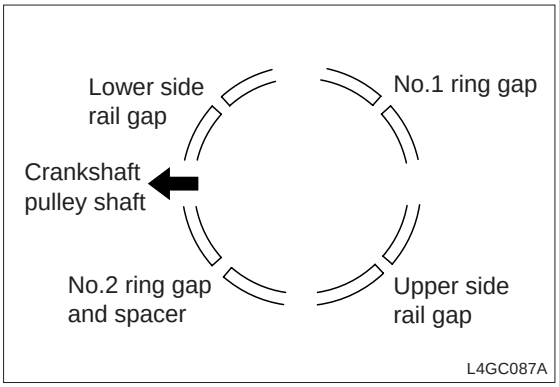

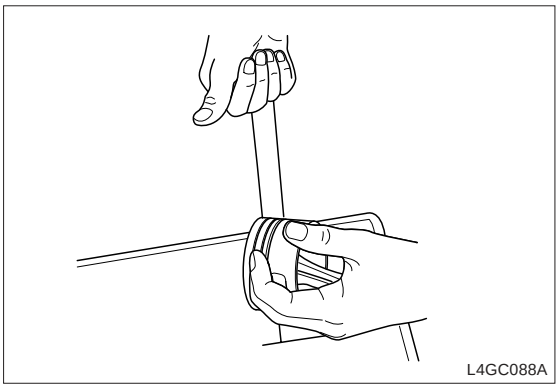

4. Install the connecting rod cap and tighten the cap nut to the specified torque.
   When installing the connecting rod cap, align the cylinder number on the connecting rod big end with cylinder number on the cap.

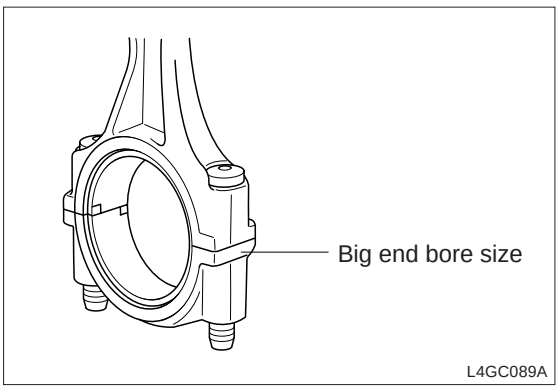

https://www.forkliftpdfmanuals.com/

5. Inspect clearance of the connecting rod big end.

Clearance of connecting rod big end	0.1 ~ 0.25mm

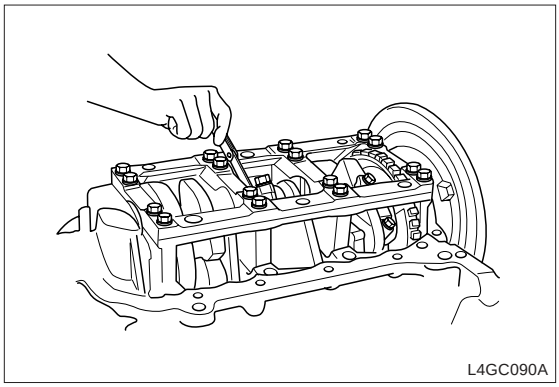

6. Install the oil screen.
7. Install the oil pan.
8. Install the cylinder head.

https://www.forkliftpdfmanuals.com/

COOLING SYSTEM

COOLANT PIPE AND HOSE

COMPONENTS

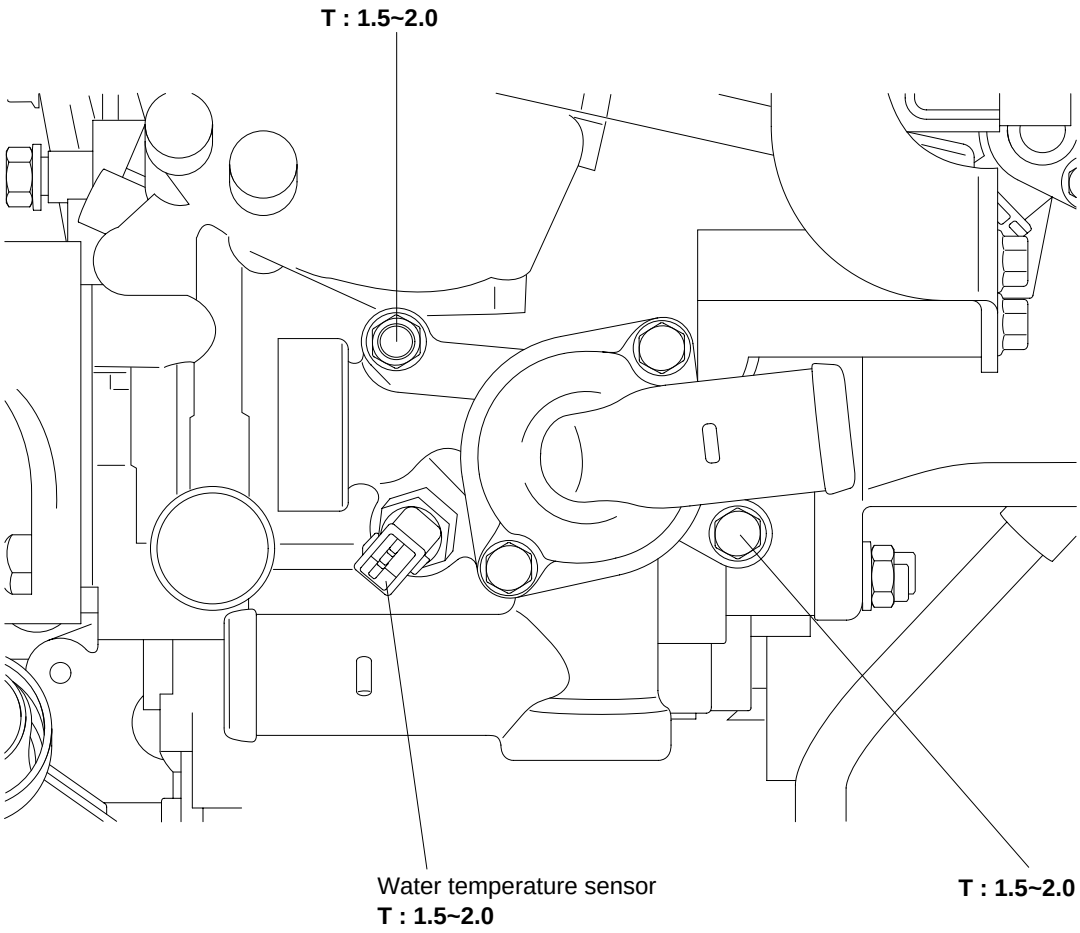

Tightening torque : kg·m

L4GC091A

https://www.forkliftpdfmanuals.com/

INSPECTION

Check the coolant pipe and hose for crack, damage, and clogging and replace it if necessary.

INSTALLATION

After getting water around O-ring, insert it the groove in the coolant intake pipe end and press-fit the pipe.

CAUTION

- ***Do not apply oil or grease to the O-ring.***
- ***Take care not to dirt the coolant pipe connecting part with sand or dust.***
- ***Press-fit the coolant intake pipe completely.***

https://www.forkliftpdfmanuals.com/

WATER PUMP

COMPONENTS

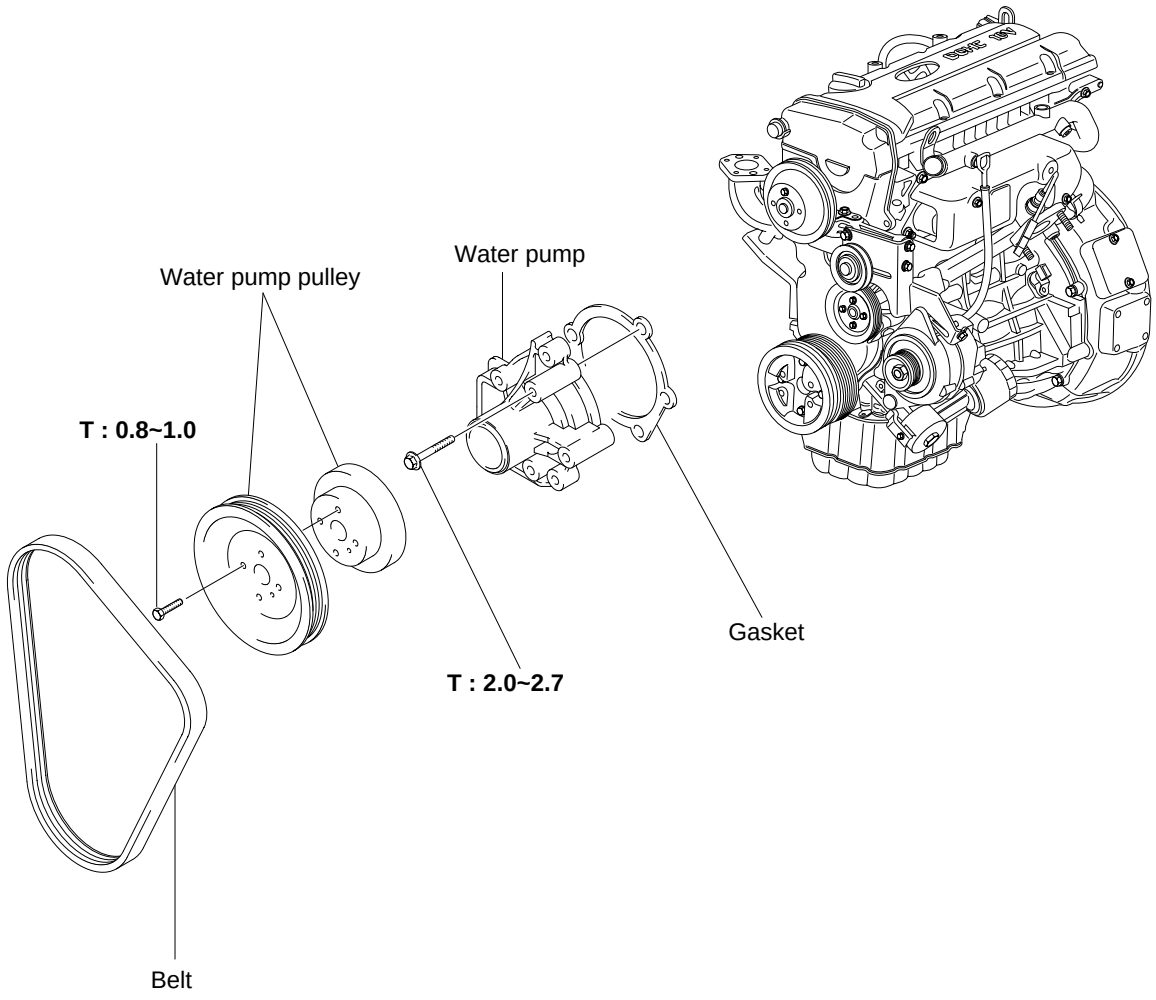

Tightening torque : kg·m

L4GC092A

https://www.forkliftpdfmanuals.com/

REMOVAL

1. Check each part for crack, damage, and wear and replace the water pump if necessary.
2. Check the bearing for damage, abnormal noise and bad rotation and replace the water pump if necessary.
3. Check the seal unit for leak and replace the water pump assembly if necessary.

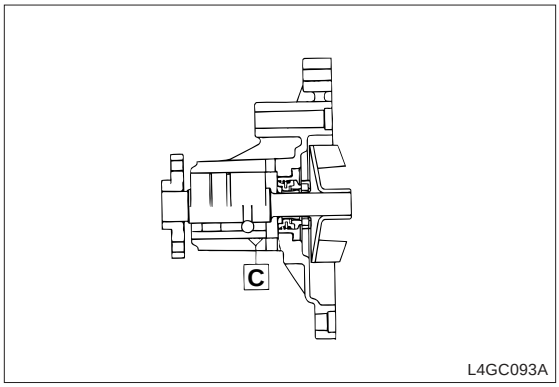

INSTALLATION

1. Clean the gasket surface of the water pump body and cylinder block.
2. After getting water around new O-ring, install it the groove in the coolant intake pipe front end. Do not apply oil or grease to the O-ring.
3. Install a new water pump gasket and water pump assembly. Tighten it to the specified torque.

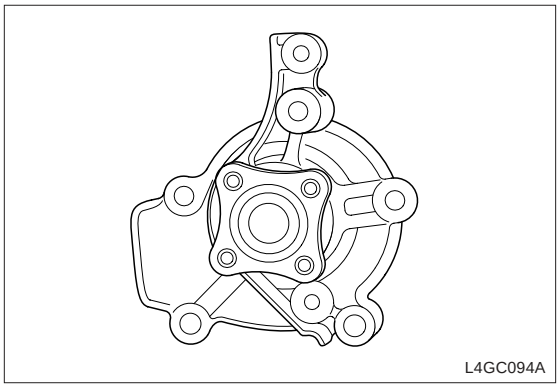

WATERPUMP AND CYLINDER BLOCK

A	2.0 ~ 2.7 kg·m
B	2.0 ~ 2.4 kg·m

4. Install the timing belt tensioner and timing belt. Adjust the timing belt tension and install the timing belt cover.
5. After installing the water pump pulley and driving belt, adjust the belt tension.
6. Add the standard coolant.
7 . Run the engine and check for leak.

https://www.forkliftpdfmanuals.com/

THERMOSTAT

COMPONENTS

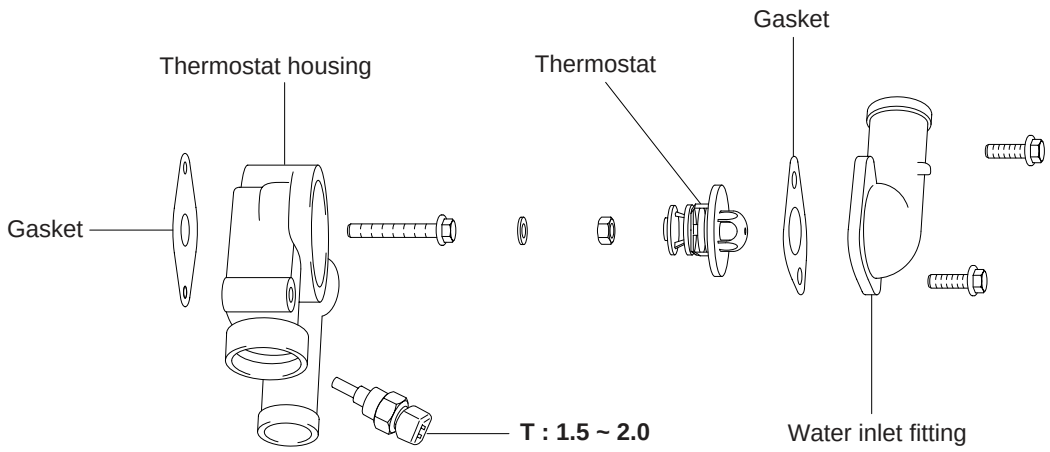

Tightening torque : kg·m

L4GC095A

INSPECTION

1. Check the valve closed at room temperature.
2. Check for defect or damage.
3. Heat the thermostat as shown in the illustration and measure the valve open temperature and full open temperature.

Valve open temperature

Open	82°C
Full open	95°C

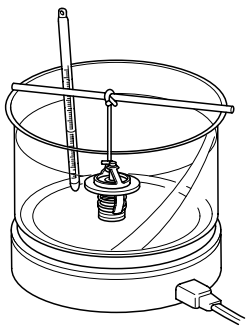

L4GC096A

INSTALLATION

1. Check that the thermostat flange is correctly inserted to the thermostat housing socket.
2. Install a new gasket and water inlet fitting.
3. Add coolant.

https://www.forkliftpdfmanuals.com/

FAN DRIVE

COMPONENTS

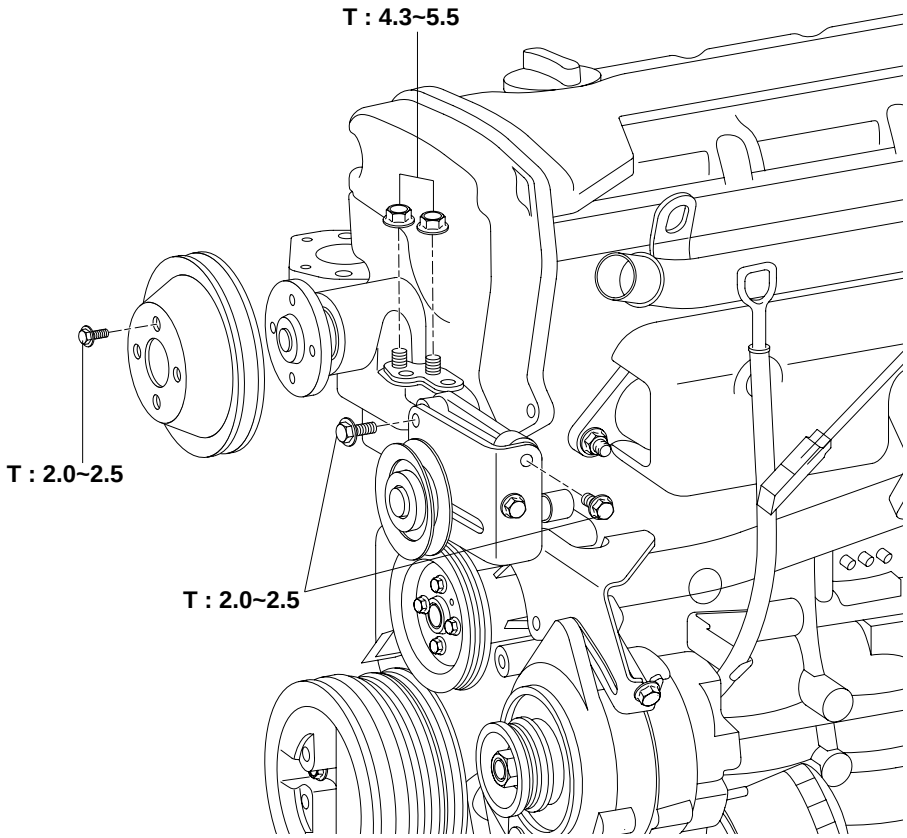

Tightening torque : kg·m

L4GC097A

REMOVAL

1. Remove the fan pulley.
2. Remove the fan bracket.

INSTALLATION

Installation is the reverse order of removal.

https://www.forkliftpdfmanuals.com/

LUBRICATION SYSTEM

OIL PRESSURE SWITCH

Oil pressure switch is located on the front right side of the engine and if oil pressure in the lubrication system drops less than 0.29kg/cm^2, the oil pressure warning lamp illuminates. Hexagonal width of this switch is 24mm.

REMOVAL AND INSTALLATION

After applying sealant to the spiral portion, install the oil pressure switch.

NOTE

Do not tighten the oil pressure switch too tight.

Oil pressure switch	1.3 ~ 1.5kg·m

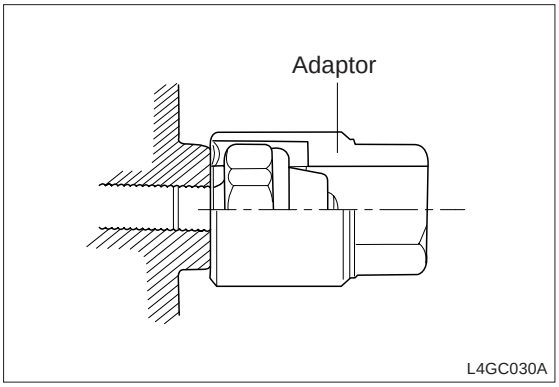

INSPECTION

1. Using an ohmmeter, measure an electric current and replace the oil pressure switch if an electric current is not detected.

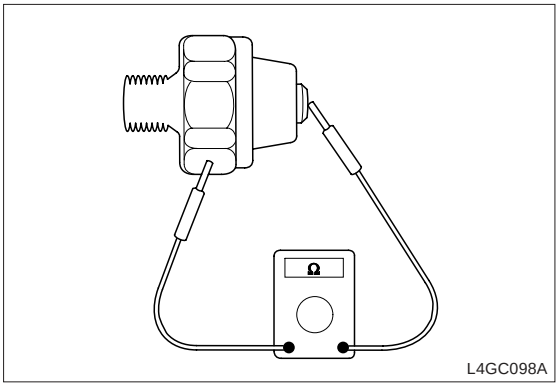

2. When pressing it with a thin stick, if an electric current is measured between terminal and body, replace the oil pressure switch.
3. When applying a negative pressure of 0.3kg/cm^2 through the oil hole, it an electric current is not measured, the switch is normal. If the switch is not normal, check for air leak. If air is leaked, replace the switch because it means damage of the diaphragm.

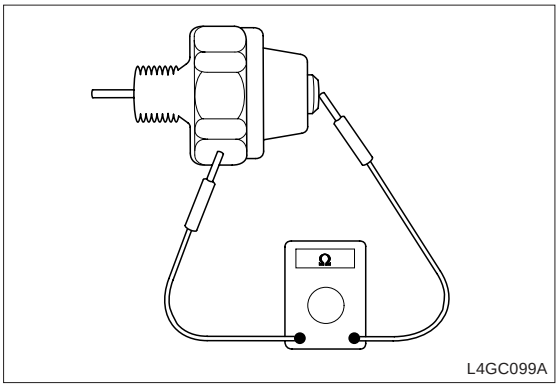

https://www.forkliftpdfmanuals.com/

4. Front case (Oil pump)
5. Timing belt
6. Timing belt cover

https://www.forkliftpdfmanuals.com/

INTAKE AND EXHAUST SYSTEM

EXHAUST MANIFOLD

COMPONENTS

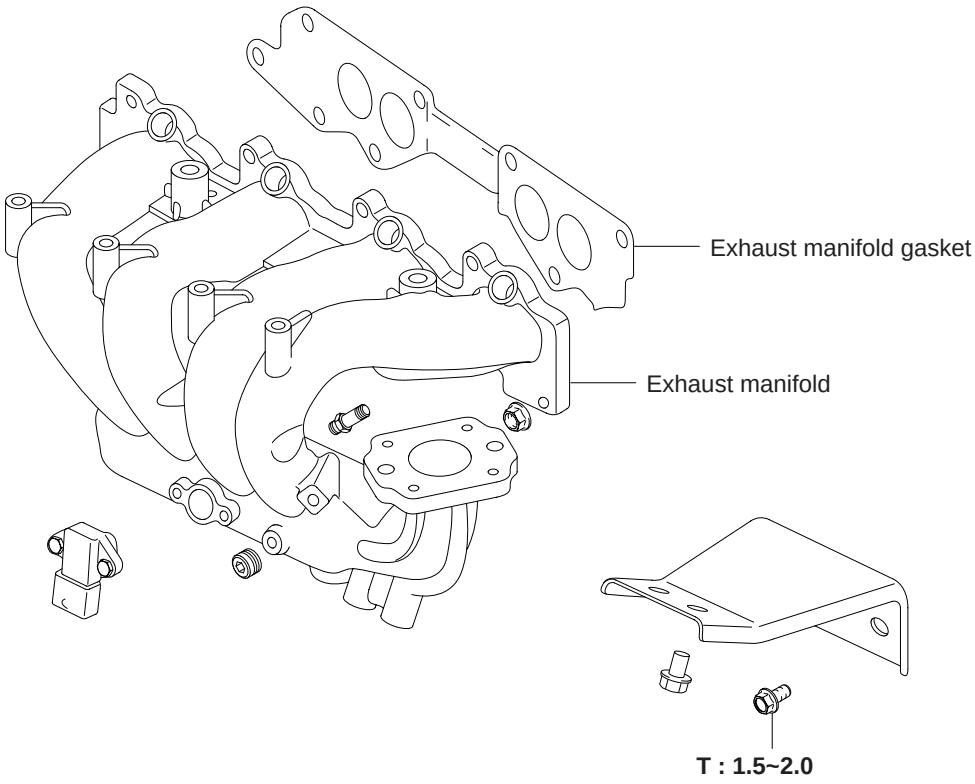

Tightening torque : kg·m

L4GC100A

https://www.forkliftpdfmanuals.com/

REMOVAL

1. Remove the heat protector.
2. Detach the exhaust manifold from the cylinder head.

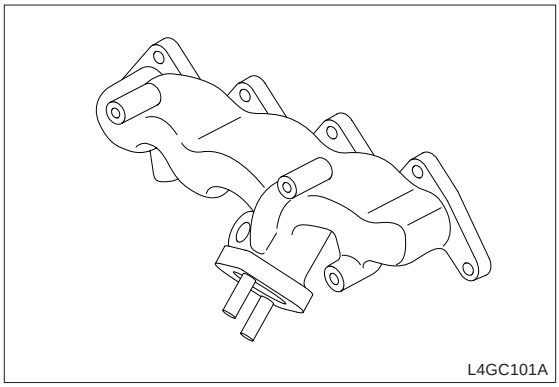
L4GC101A

INSPECTION

1. Check the exhaust manifold for damage and crack.
2. Check the welding part between the exhaust manifold and catalyst for crack and damage.

INSTALLATION

1. Installation is the reverse order of removal.

   CAUTION
   Do not reuse the exhaust manifold gasket nut.

2. Exhaust manifold gasket
   Check the gasket for tear or damage.

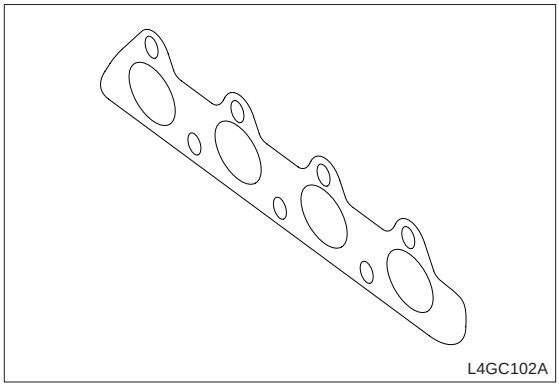
L4GC102A

https://www.forkliftpdfmanuals.com/

INTAKE MANIFOLD

COMPONENTS

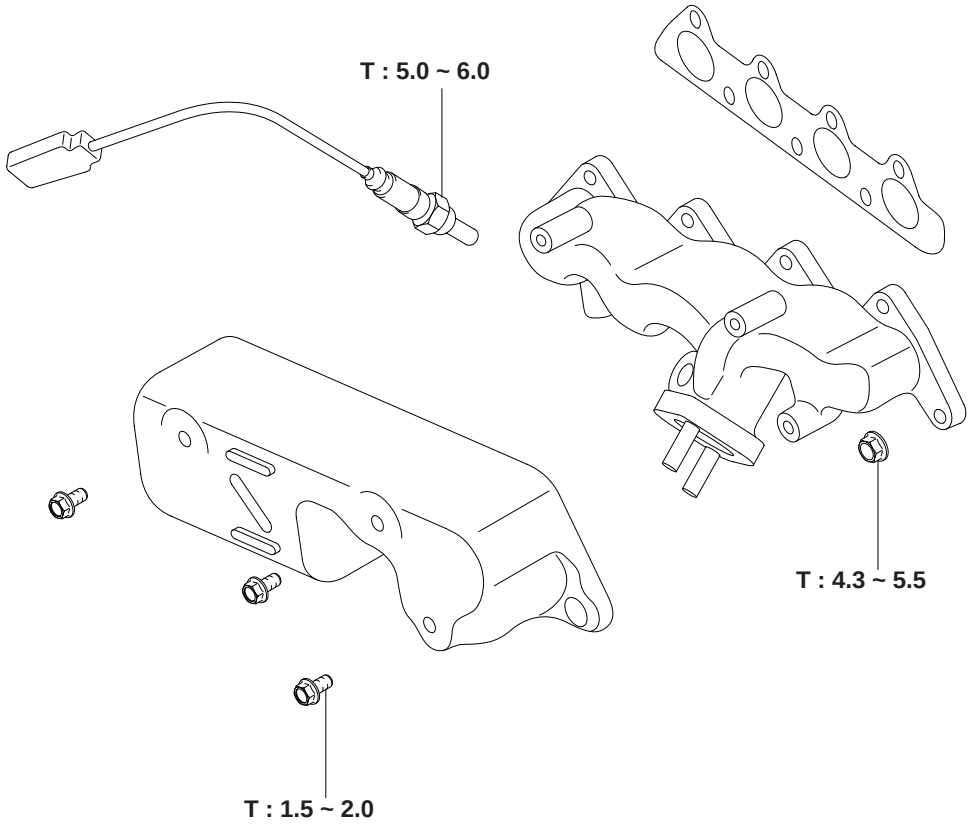

Tightening torque : kg·m

L4GC103A

CAUTION
Do not tighten parts excessively, observe the specified torque.

https://www.forkliftpdfmanuals.com/

REMOVAL

1. Disconnect the map sensor and the connector.
2. Disconnect the air hose from the throttle body.
3. Remove the accelerator cable.
4. Remove the P.C.V valve hose.
5. Disconnect the vacuum hoses.
6. Disconnect the fuel injector connector and the wiring harness.
7. Remove the delivery pipe with the fuel injector attached.

   CAUTION
   When removing the delivery pipe, take care not to drop the injector.

8. Remove the intake manifold stay.
9. Remove the intake manifold and gasket.

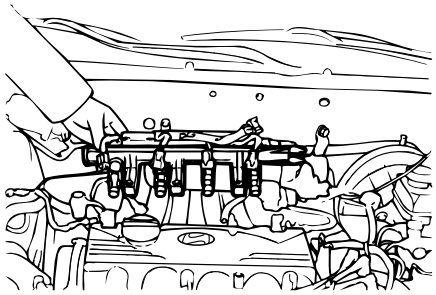
L4GC105A

INSPECTION

1. Intake manifold
   Check each component for damage and crack.
2. Air hose
   Check each component for damage and crack.

https://www.forkliftpdfmanuals.com/

INSTALLATION

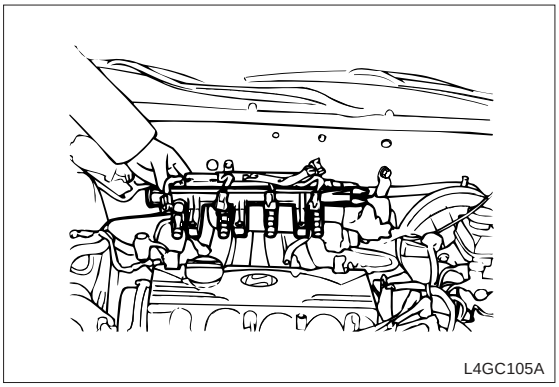
L4GC105A

1. After replacing the intake manifold gasket, install it to the cylinder head and then to the intake manifold.
2. Install the delivery pipe and injector assembly to the intake manifold.

CAUTION
Check that the injector is interfered with the injector hole in the intake manifold.

3. Install the fuel injector connector and wiring harness.
4. Connect the high-pressure fuel hose.
5. Connect the vacuum hoses.
6. Connect the P.C.V valve hose.
7. Install the air hose.
8. Check connectors for connection.

https://www.forkliftpdfmanuals.com/

CYLINDER HEAD ASSEMBLY

CYLINDER HEAD ASSEMBLY

COMPONENTS

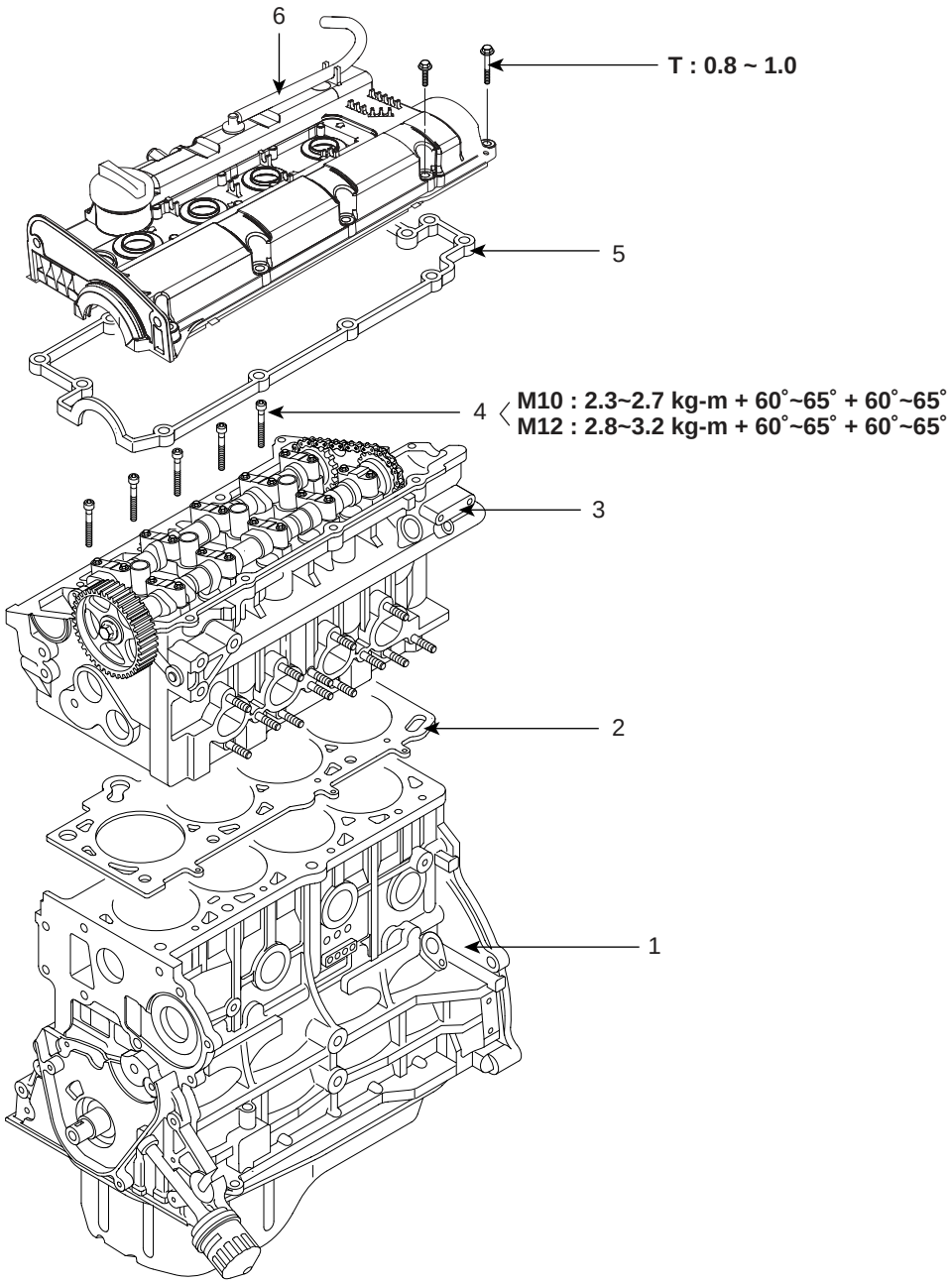

Tightening torque : kg·m

L4GC107A

1. Cylinder block
2. Cylinder head gasket
3. Cylinder head
4. Cylinder head bolt
5. Gasket
6. Cylinder head cover

https://www.forkliftpdfmanuals.com/

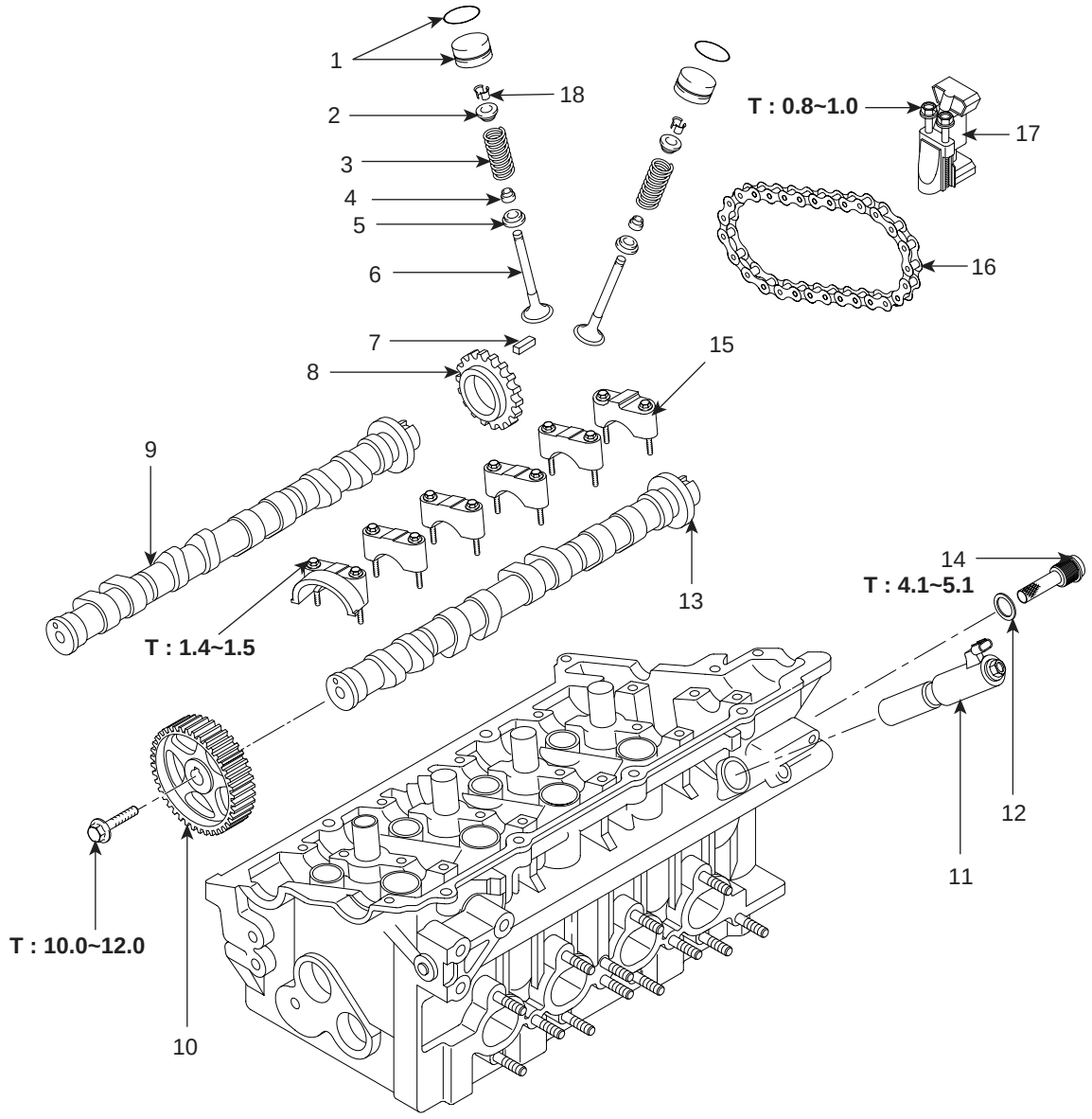

Tightening torque : kg·m

L4GC108A

1. MLS(Mechanical valve clearance adjusting system
2. Retainer
3. Valve spring
4. Stem seal
5. Spring seat
6. Valve
7. Key
8. Chain sprocket
9. Intake camshaft
10. Camshaft sprocket
11. OCV(Oil control valve)
12. Washer
13. Exhaust camshaft
14. OCV(Oil control valve) filter
15. Camshaft bearing cap
16. Timing chain
17. Auto tensioner
18. Retainer lock

https://www.forkliftpdfmanuals.com/

DISASSEMBLY

1. Using the special tool "cylinder head bolt wrench (09221-32001)", tighten the cylinder head bolts in order by tightening 2-3 times as shown in the illustration.
   - ***Take care not to come the cylinder head gasket debris into the cylinder.***

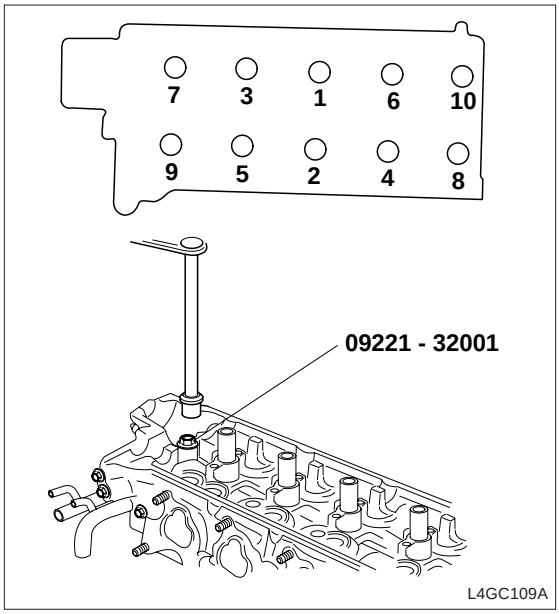

2. Using the special tool "valve spring compressor (09221-29100)", remove the retainer lock.
   And then, remove the spring retainer, valve spring, spring seat and valve.

   NOTE
   Arrange parts in order disassembling not to make a mistake while reassembling.

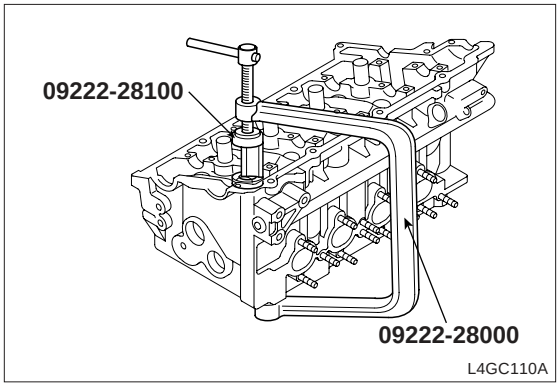

3. Remove the stem seal with pliers.

   NOTE
   Do not reuse the stem seal.

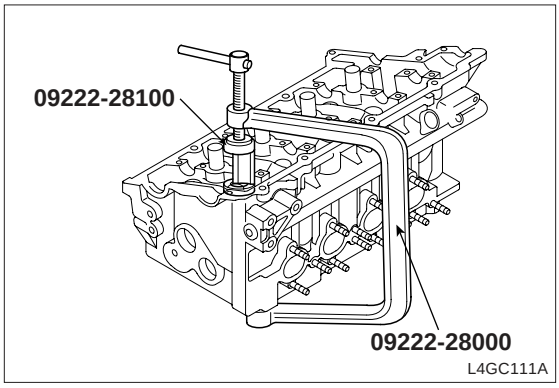

https://www.forkliftpdfmanuals.com/

INSPECTION

CYLINDER HEAD

1. Check the cylinder head for crack, damage and leak.
2. Clean out fur, adhesive and accumulated carbon and after cleaning the oil passage, bleed the passage with compressed air to check it for clogging.
3. Using a square, check the cylinder head gasket for flatness from A and B directions shown in the illustration. If any flatness is out of the limit, replace the cylinder head or slightly cut the cylinder head gasket surface.

Flatness of cylinder head gasket surface	Standard	0.03mm or less
	Limit	0.06mm

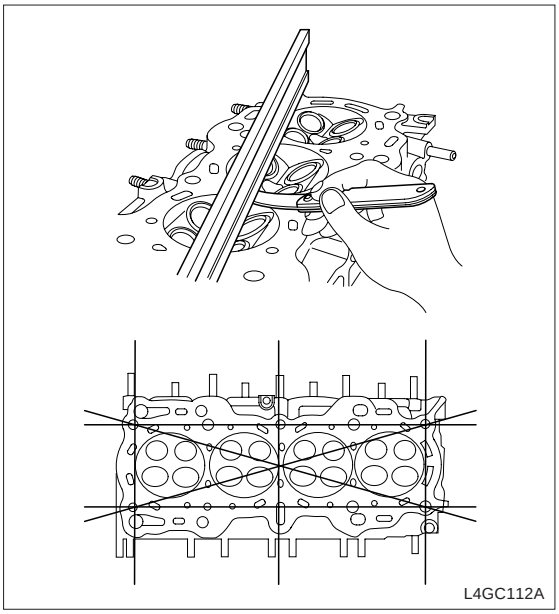

VALVE

1. Clean the valve with a wire brush.
2. Check each valve for wear and damage and inspect the head and stem for torsion.
   If the stem end A is cave or worn, trim it.
   At this time, trim it least.
   Also, trim the valve surface.
   If the margin is less than the limit, replace the valve.

Valve margin

Standard	Intake	1.15mm
	Exhaust	1.35mm
Limit	Intake	0.8mm
	Exhaust	1.0mm

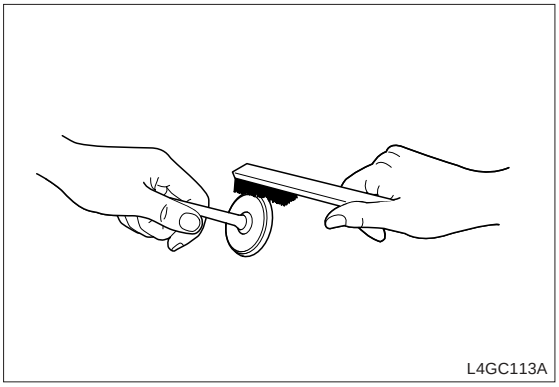

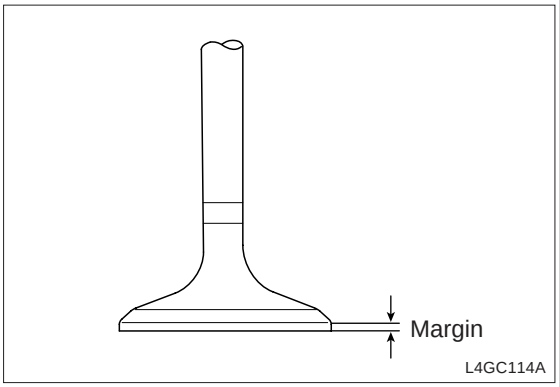

https://www.forkliftpdfmanuals.com/

VALVE SPRING

1. Measure free height of the valve spring and replace the spring if the measured value exceeds the limit.
2. Using a square, measure squareness of each spring and replace it if the measured value is out of squareness excessively.

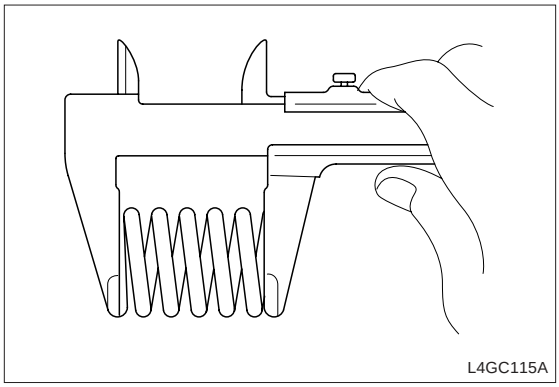
L4GC115A

Valve spring

Standard	Free height	48.86mm
	Installed load	18.3kg / 39mm
	Compressed load	40.0kg / 30.5mm
	Out-of-squareness	1.5° or less
Limit	Free height	-1.0mm
	Out-of-squareness	3 °

3. Measure the clearance between the valve stem and guide and if the measured value exceeds the limit, replace the valve guide with the following over size parts.

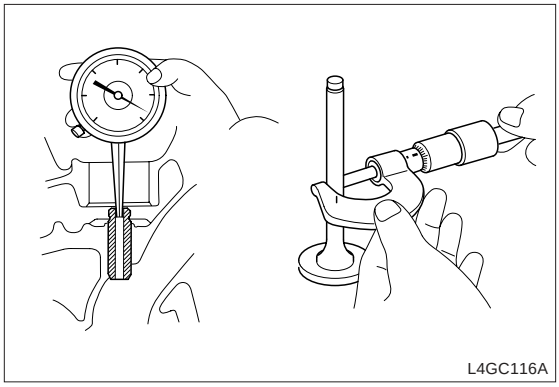
L4GC116A

Valve stem and guide clearance

Standard	Intake	0.02 ~ 0.05mm
	Exhaust	0.035 ~ 0.065mm
Limit	Intake	0.1mm
	Exhaust	0.13mm

VALVE SEAT CORRECTION

Check the valve seat for overheat and inspect contact with valve surface. Correct or replace it if necessary. When correcting, check the valve guide for wear, if it is worn, replace the guide and correct the seat ring. Using a grinder or a cutter, correct the valve seat to make the seat contact width to the standard. When correcting the exhaust valve seat, must use the valve seat voce and pilot, after correcting, must apply a light coat of compound to the valve and valve seat.

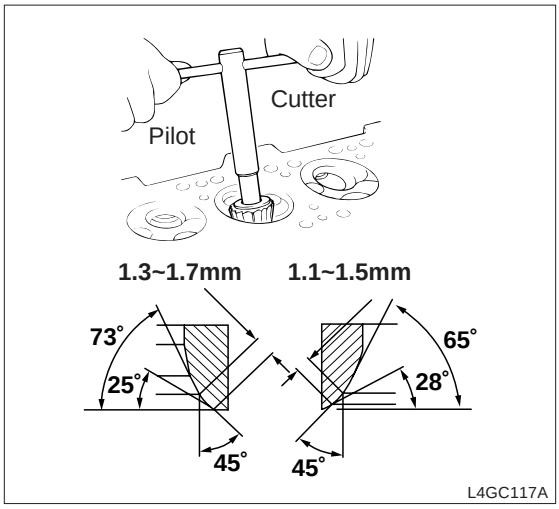

L4GC117A

https://www.forkliftpdfmanuals.com/

VALVE SEAT RING REPLACEMENT

1. If the valve seat insert is excessively worn, cut the insert ring wall as shown in the illustration "A" using a valve seat cutter at a normal temperature.

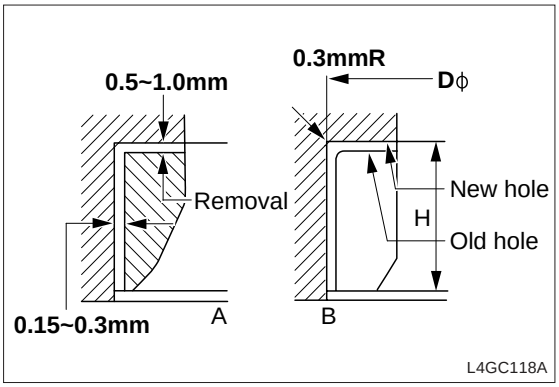

2. After removing the seat ring, Cut the seat insert bore as same size as the following table using a reamer or cutter.
3. Heat the cylinder head to 250°C and press-fit the oversize seat.
   At this time the oversize seat ring maintains a normal room temperature.
   After installing a new valve seat, correct the valve seat surface.

Valve seat ring oversize

Item	Size (mm)	Size mark	Cylinder insert height H (mm)	Cylinder head I.D (mm)
Intake valve seat ring	0.3 OS	30	7.5 ~ 7.7	33.330 ~ 33.325
	0.6 OS	60	7.8 ~ 8.0	33.600 ~ 33.625
Exhaust valve seat ring	0.3 OS	30	7.9 ~ 8.1	28.800 ~ 28.821
	0.6 OS	60	8.2 ~ 8.4	29.100 ~ 29.121

https://www.forkliftpdfmanuals.com/

VALVE GUIDE REPLACEMENT

Because the valve guide is press-fitted, replace the valve guide as the following procedures using a valve guide installer or proper tool.

1. Remove the valve guide pressed toward cylinder block using a push rod of valve guide installer.
2. Cut the valve guide insert bore of the cylinder head to the valve guide oversize.
3. Press-fit the valve guide using a valve guide installer or proper tool. When using a valve guide installer, Use a valve guide installer to press-fit the valve guide to the specified height.

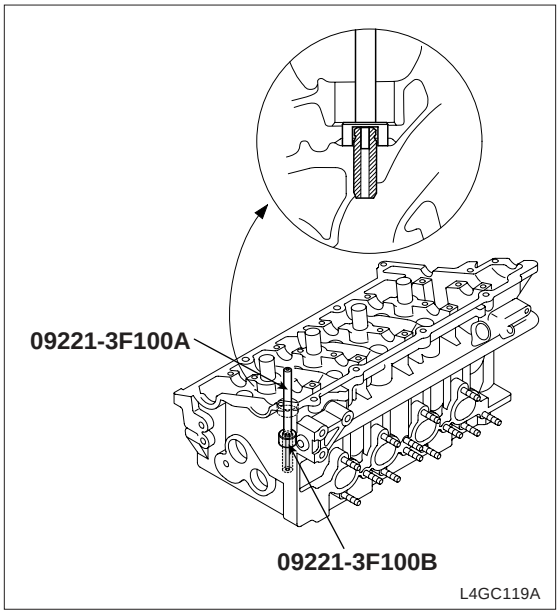

4. When installing, start from top of valve guide cylinder head. Be sure that the intake valve guide is not same size with the exhaust valve guide. (Intake valve guide : 46.0mm, exhaust valve guide : 54.5mm)
5. After installing the valve guide, insert a new valve and check for perturbation.
6. When replacing the valve guide, check the valve for contact and correct the valve seat if necessary.

Valve guide oversize

Size	Size mark	Cylinder head bore size
0.05 OS	5	11.05 ~ 11.068mm
0.25 OS	25	11.25 ~ 11.268mm
0.50 OS	50	11.50 ~ 11.518mm

https://www.forkliftpdfmanuals.com/

ASSEMBLY

CAUTION

- ***Prior to assembly, clean each component.***
- ***Apply a new engine oil to the perturbation part and rotation part.***

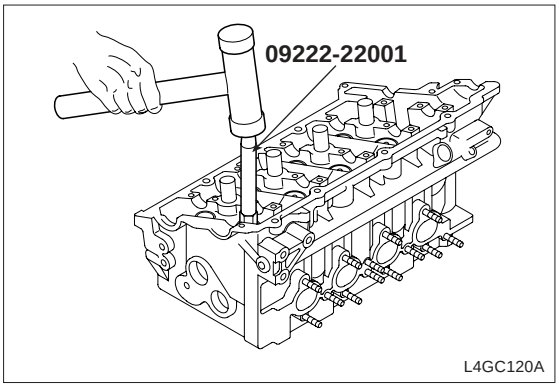

1. After installing the spring seat, insert the stem seal to the valve guide.
   Install the stem seal by tapping on it with the special tool "valve stem oil seal installer (09222-22001)".
   Wrong installation of the seal can affect oil leak from the valve guide, so use the special tool to install it to exact position and take care not to twist it. Do not reuse it.
2. After applying engine oil to each valve, insert the valve into the valve guide.
3. Install the spring and spring retainer. Face the enamel-plated side toward the valve spring retainer side.

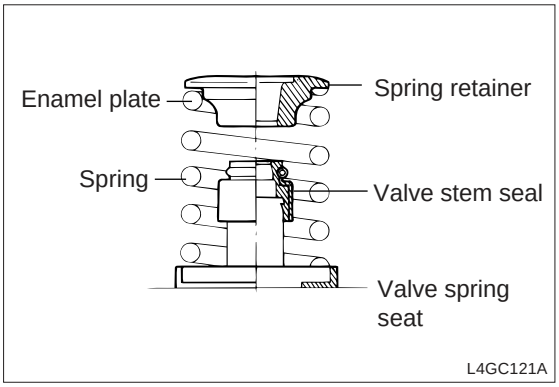

4. Taking care not to press the valve stem seal down to the retainer bottom, press-fit the spring with the special tool "valve spring compressor (09222-28000, 09222-28100)".

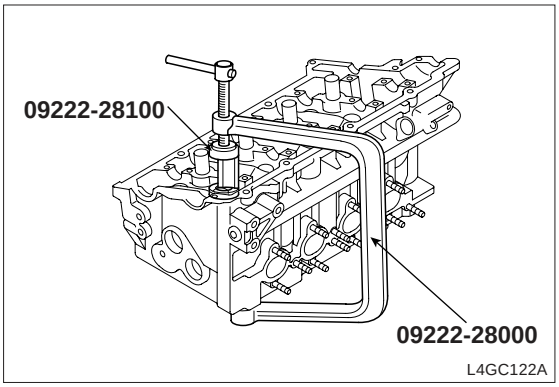

https://www.forkliftpdfmanuals.com/

5. Clean out all gasket surfaces of the cylinder block and cylinder head.
6. Put new cylinder head gaskets on the cylinder block with the identification marks faced upward. Do not apply sealant to the gasket and do not reuse the used cylinder head gasket. Take care not to make a mistake of gasket.
7. Put the cylinder head on the cylinder block.
8. Apply a slight coat of engine oil to the spiral portion of bolt.
9. Insert the washer to the bolt and insert it to the cylinder head.
10. Using the special tool "cylinder head bolt wrench (09221-32001)", install the cylinder head bolt as shown in the illustration.

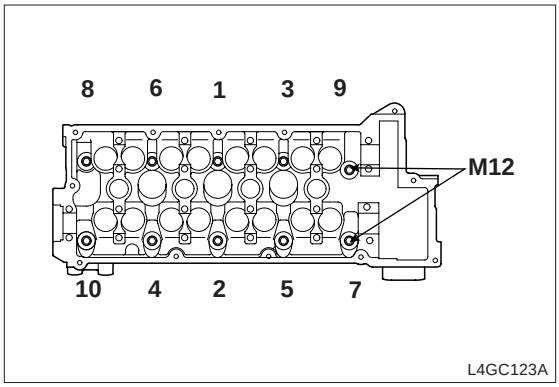

Cylinder head bolt

M10	2.5kg·m + (60°~ 65°) + (60°~ 65°)
M12	3.0kg·m + (60°~ 65°) + (60°~ 65°)

https://www.forkliftpdfmanuals.com/

TIMING BELT

COMPONENTS

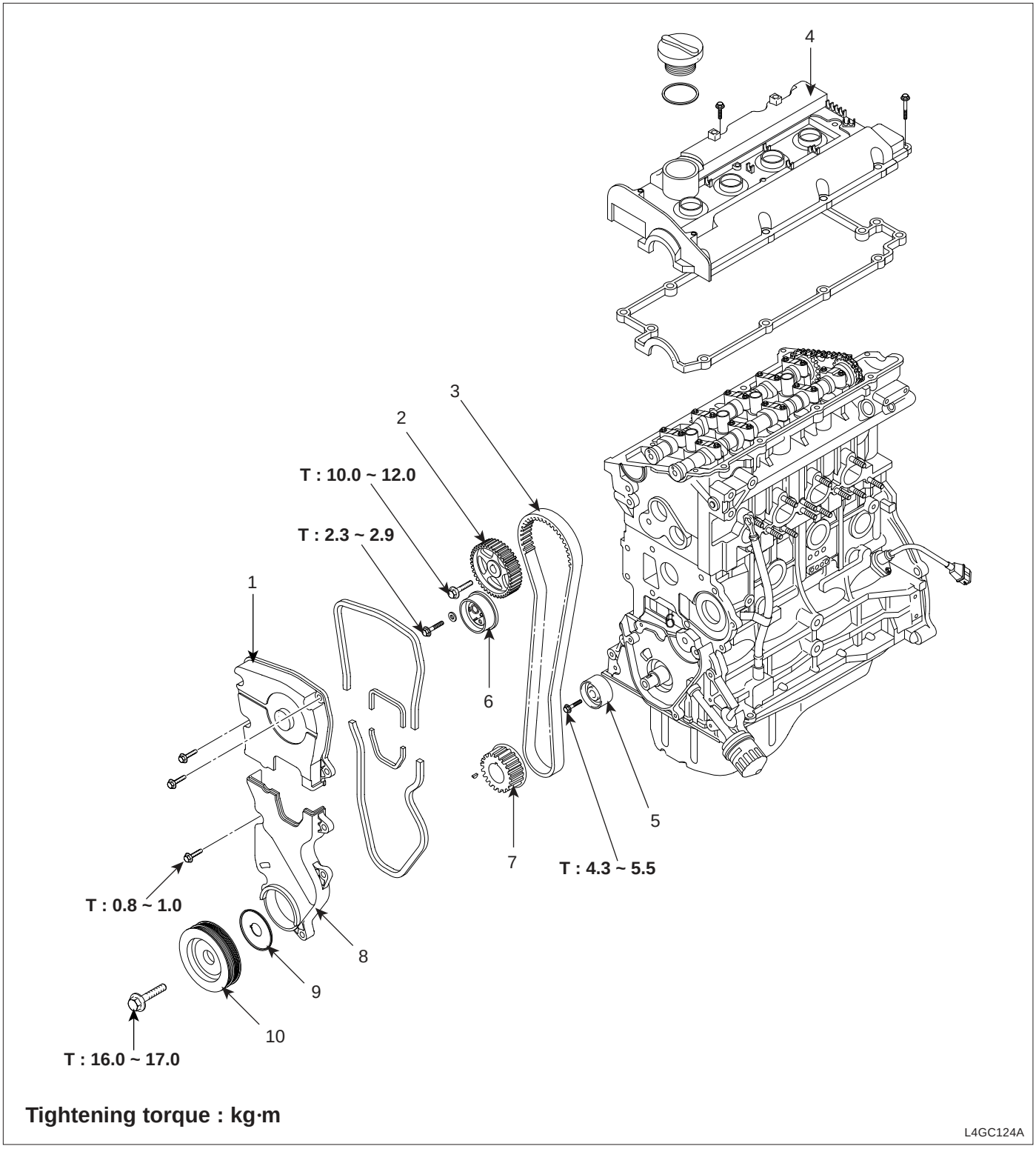

1. Timing belt upper cover.
2. Camshaft sprocket
3. Cylinder head cover
4. Cylinder head cover
5. Idler
6. Tensioner
7. Crankshaft sprocket
8. Timing belt lower cover
9. Flange
10. Crankshaft pulley

https://www.forkliftpdfmanuals.com/

REMOVAL

1. Loosen the water pump pulley belt.
2. Loosen the alternator bolt.
3. Remove the water pump pulley and belt.

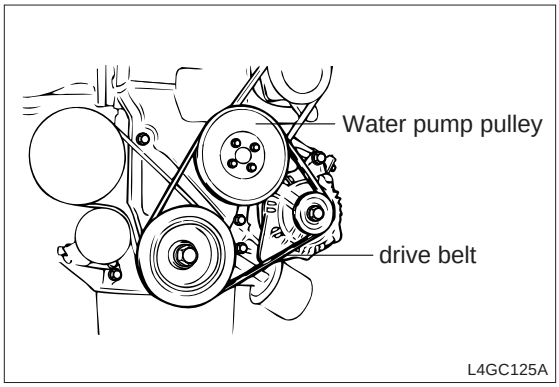

4. Crankshaft pulley.
5. Remove the timing belt cover.

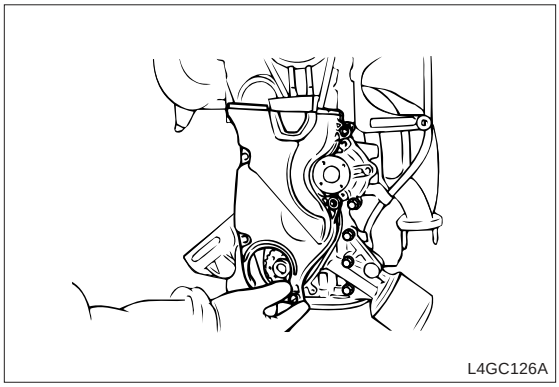

6. Remove the timing belt tensioner pulley.

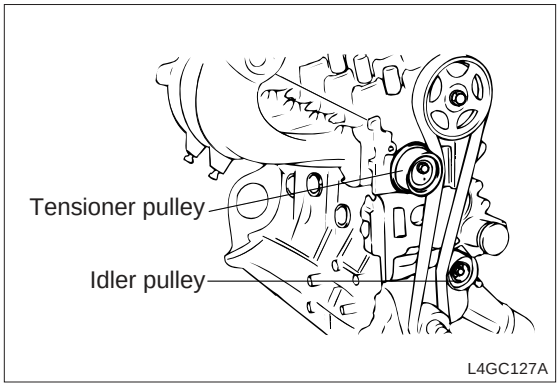

7. Remove the timing belt form the camshaft sprocket.
8. Remove the camshaft sprocket.
9. Remove the timing belt.

NOTE
When reusing the timing belt, put an arrow mark on the rotation direction (or front side of engine) before removal to help re-install it to original installation direction.

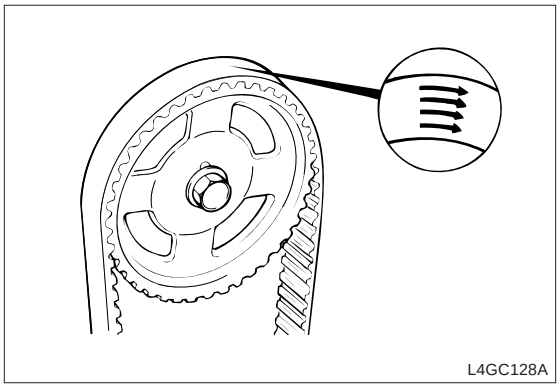

https://www.forkliftpdfmanuals.com/

10. Remove the idler.
11. Loosen the camshaft sprocket bolt and remove the camshaft sprocket.

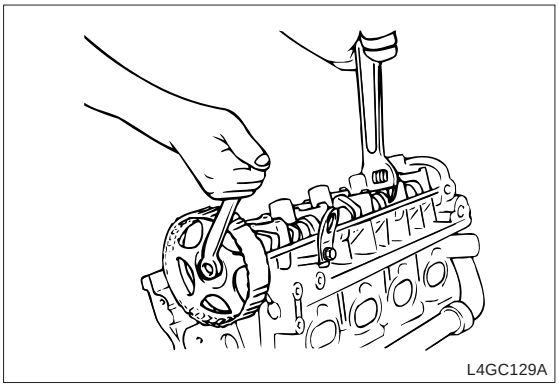
L4GC129A

12. Remove the crankshaft sprocket bolt and remove the crankshaft sprocket and flange.
13. Remove the timing belt tensioner.

https://www.forkliftpdfmanuals.com/

INSPECTION

SPROCKET, TENSIONER, IDLER

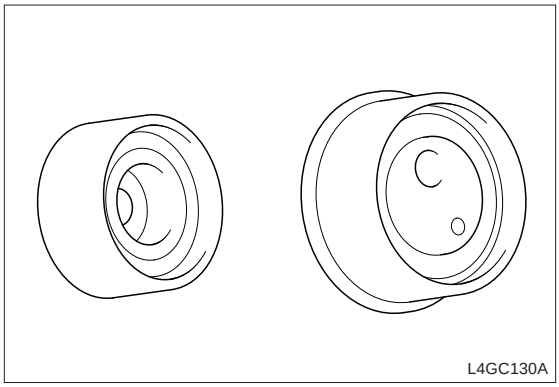
L4GC130A

1. Check the camshaft sprocket, crankshaft sprocket, tensioner and idler for wear, crack and damage and replace it if necessary.
2. Check the tensioner and idler pulley for smooth rotation, check for play and noise, and replace it if necessary.
3. If grease leak is inspected, replace it.

TIMING BELT

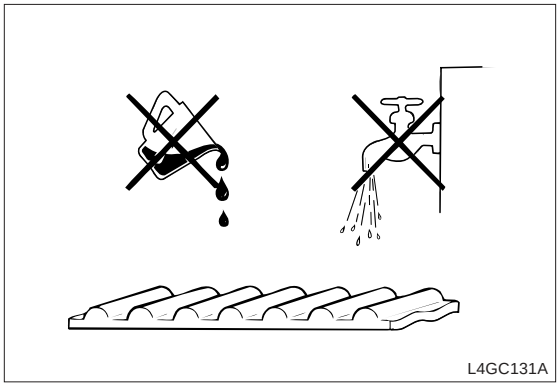
L4GC131A

1. Check the belt for oil or dust deposit and replace it if necessary. In case of small amount of oil or dust, clean it with a rag or paper instead of a solvent.
2. After overhauling the engine or readjusting the belt, inspect the belt in detail and replace it with a new one if the following defects are detected.

CAUTION
- ***Do not bend or twist the timing belt.***
- ***Take care not to contact the timing belt with oil, water, grease and steam.***

https://www.forkliftpdfmanuals.com/

Description	Specification
1. Back side rubber is hardened	Glossy back side. Due to non-elasticity and hardening, when pressing it with the tip of a finger, there is no sign of it. 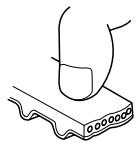 L4GC132A
2. Back side rubber is cracked	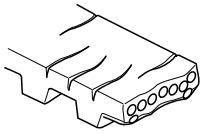 L4GC133A
3. Canvas is cracked or detached	L4GC134A 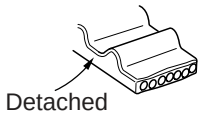 L4GC135A 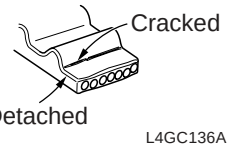 L4GC136A
4. Tooth is excessively worn out (initial step)	Tooth loaded from canvas is worn (elastic canvas fiber rubber is worn, color is faded in white, canvas structure is deformed) 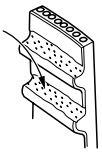 L4GC137A
5. Tooth is excessively worn out (final step)	Tooth loaded from canvas is worn and rubber is worn off (tooth width is narrowed) 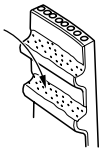 L4GC138A
6. Tooth bottom is cracked	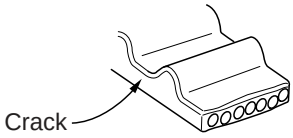 L4GC139A
7. Tooth is missing	Tooth is missing and canvas fiber is worn off L4GC140A
8. The side of belt is severely worn out	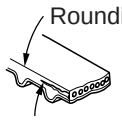 L4GC141A
9. The side of belt is cracked	***NOTE*** ***In case of normal belt, it is cut precisely as if cut with a sharp cutter*** 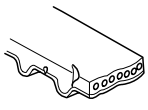 L4GC142A

https://www.forkliftpdfmanuals.com/

ASSEMBLY

1. Install the flange and crankshaft sprocket taking care of installation direction as shown in the illustration.

Crankshaft sprocket bolt	17 ~ 18kg·m

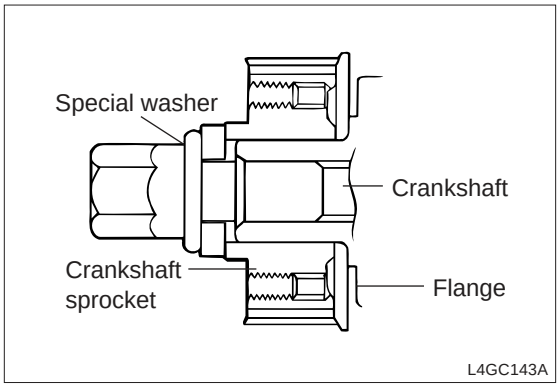

2. Install the camshaft sprocket and tighten the bolt to the specified torque.

Crankshaft sprocket bolt	10 ~ 12kg·m

3. Install the idler and tighten the bolt to the specified torque.

Idler fixing bolt	4.3 ~ 5.5kg·m

4. With no.1 cylinder piston to the dead point of compression stroke, align the timing mark on the camshaft sprocket and timing mark on the crankshaft sprocket.
   1) After installing the tensioner, spring and spacer and tightening the bolt temporarily, tighten the long hole shaft washer of tensioner and bolt.
   2) Install the spring bottom end to the front case as shown in the illustration.
   3) Install the flange and crankshaft sprocket taking care of installation direction and then tighten the washer and bolt temporarily.
   4) When aligning the timing marks, after turning the camshaft sprocket to place the red timing mark on the cam cap in the middle of the knock pin Ø4.5 bore, align this timing mark with the timing mark on the front case by rotating the shaft sprocket.
   5) Install the belt with the timing aligned as shown in the illustration. (When installing, start from the belt tension side and then install the belt by pressing the tensioner.

CAUTION
When no.1 piston is at TDC, if the camshaft sprocket mark is not aligned more than 2 teeth, interference between piston and valve occurs. So take care of timing aligning.

https://www.forkliftpdfmanuals.com/

6) Install the timing belt not to loosen in the following order. Crankshaft sprocket(A) → Idler pulley(B) → Camshaft sprocket(C) → Timing belt tensioner(D).
(After installing timing belt, auto tensioner may be installed)

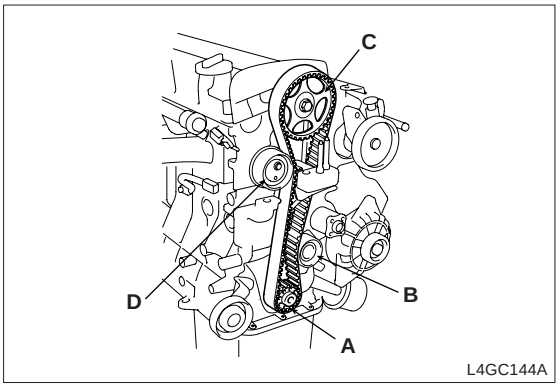

7) Be sure that timing mark on each sprocket is placed on the proper position.
8) Remove the tensioner arm fixing pin.
9) Insert a hexagonal wrench to the adjuster groove as below, rotate it counterclockwise to place the arm indicator in the middle of base groove.

CAUTION
Do not rotate the wrench clockwise, or the auto tensioner is not normally functioned.

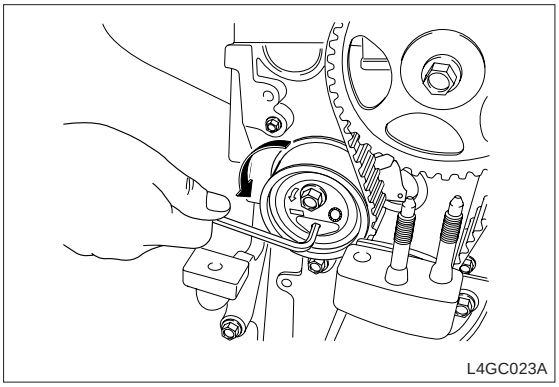

10) With the arm indicator fixed not to move, tighten the tensioner fixing bolt.

Tightening torque	2.3 ~ 2.9kgf·m

11) Rotate the crankshaft to 2 turns clockwise and then be sure that the auto tensioner arm indicator is placed in the middle of base groove.
12) If the arm indicator is out of the middle of groove, loosen the bolt and repeat the above procedure.
13) Install the timing belt lower cover.

Tightening torque	0.8 ~ 1.0kgf·m

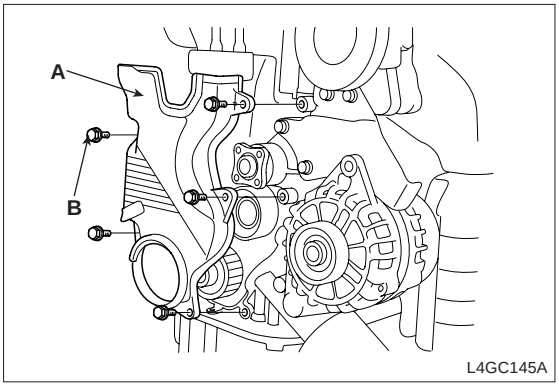

https://www.forkliftpdfmanuals.com/

14) Install the crankshaft pulley(A) together with the flange, tighten the bolt(B).
When installing, align the crankshaft key with the pulley groove.

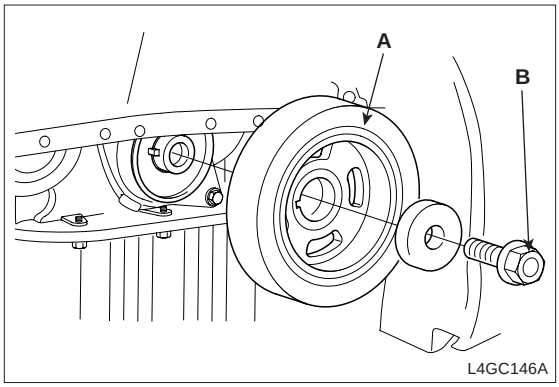

Crankshaft pulley bolt

Tightening torque	16.0 ~ 17.0kgf·m

15) Install the timing belt upper cover.

Tightening torque	0.8 ~ 1.0kgf·m

16) Install the water pump pulley.
17) Install the alternator driving belt.
18) Tighten the water pump pulley fixing bolt.

https://www.forkliftpdfmanuals.com/

CHAPTER 3. ENGINE ELECTRICAL SYSTEM

1. GENERAL 3- 1

2. IGNITION SYSTEM 3- 3

3. CHARGING SYSTEM 3- 9

4. STARTING SYSTEM 3- 25

https://www.forkliftpdfmanuals.com/

GENERAL

SPECIFICATIONS

#1 TDC SENSOR

Item	Specification
Type	Non-contacting type
Advance system	Controlled by ECU
Ignition order	1→3→4→2

CRANKSHAFT POSITION SENSOR

Item	Specification
Type	Non-contacting type
Advance system	Controlled by ECU
Ignition order	1→3→4→2

IGNITION COIL

Item	Specification
1st coil resistance	0.58±10%(Ω)
2nd coil resistance	8.8±15%(Ω)

SPARK PLUG

Item		Specification
Type	NGK	PFR6N
	CHAMPION	RC8PYPB
Spark plug gap		0.7 ~ 0.8mm

STARTER MOTOR

Item		Specification
Output		1.7 kW
Pinion tooth number		8
No-load characteristic	Terminal voltage	11V
	Maximum current	90A
	Minimum speed	2600 rpm

https://www.forkliftpdfmanuals.com/

ALTERNATOR

Item	Specification
Type	Battery voltage sensing type
Rated output	13.5V 90A
RPM	1,000 ~ 18,000rpm
Regulator adjusting voltage	14.4 ± 0.3V/20°C
Temperature compensation	-10 ± 3mV/°C
Voltage regulator type	Electro-magnetic, Built-in type

NOTE

1. ***Cold cranking ampere : It means that terminal voltage is maintained 7.2V or more at a certain temperature and battery current is supplied for 30 seconds.***
2. ***Reserve capacity : It represents the time can be supplied 25A from battery with minimum terminal voltage maintained 10.5V at 26.7°C.***

https://www.forkliftpdfmanuals.com/

IGNITION SYSTEM

GENERAL

1. If the ignition switch is ON, the battery voltage is supplied to 1st coil of ignition coil.
2. By rotation of the crank position sensor wheel, ignition signal in ECU is actuated the power transistor and repeat ground or shut off of 1st current of ignition coil.
3. This causes high pressure in 2nd coil, the induced current from ignition coil to 2nd, coil is grounded though the spark plug and each cylinder is ignited.

TROUBLESHOOTING

When it is hard to start engine, there can be problem with fuel system or engine itself as well as ignition system.
Because main function of ignition system is to supply sufficient electronic spark at a proper timing, when inspecting this system, necessarily contains spark checking and ignition timing measurement. When inspecting ignition system installed to the vehicle, check for possible trouble symptoms from faulty circuit, power, 1st low voltage circuit, high voltage circuit, etc..

1. ENGINE IS NOT STARTED OR HARD TO START. (CRANKING O.K.)

   A spark of spark plug is weak or not at all
   1) Check Ignition coil
   2) Crankshaft position sensor
   3) Spark plug

   A spark is normal
   Check ignition timing (Ignition timing is automatically controlled by ECU)

2. IDLING IS UNSTABLE
   - **Spark plug**
   - **Ignition timing**
   - **Ignition coil**

3. ACCELERATION IS INSUFFICIENT.
   - **Check Ignition timing**
4. ENGINE IS OVERHEATED AND FUEL CONSUMPTION IS EXCESSIVE.
   - **Check Ignition timing**

https://www.forkliftpdfmanuals.com/

INSPECTION OF IGNITION TIMING

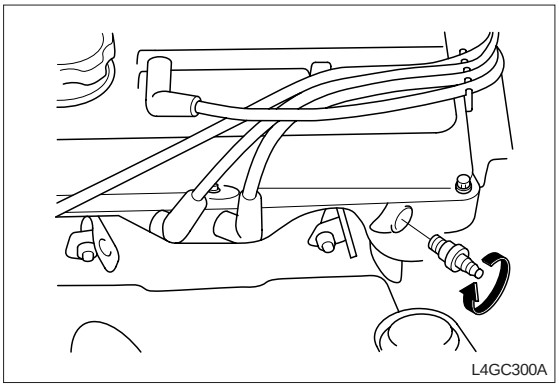
L4GC300A

1. Inspection condition
   Coolant temperature : 80-90°C(At normal temperature)
   Lamp, cooling fan and all accessories : OFF
   Transaxle : In neutral position (Auto : N)
   Parking brake : ON

2. Inspection
   1) Connect the timing light.
   2) After inserting the clip backward the connector, connect the tachometer with the special tool (09273-24000)

      CAUTION
      Take care not to disconnect the connector.

   3) Measure RPM.

RPM

2.0DOHC	700±100rpm

NOTE
If RPM is not normal, it is impossible to measure the proper ignition timing, so measure it at a normal RPM.

   4) Inspect the standard ignition timing.

BTDC	2° ± 6°

   5) If ignition timing is out of the standard, inspect sensors concerned with ignition timing.

      CAUTION
      Because ignition timing is fixed by set data value in ECU, it is impossible to control on purpose. Fist, check that sensors send output properly to help determine ignition timing control.

      NOTE
      Affective ECU input to Ignition timing control
      1. ***Coolant temperature sensor (WTS)***
      2. ***Oxygen sensor***
      3. ***Battery voltage***
      4. ***Vehicle speed sensor***
      5. ***Map sensor (Engine load)***
      6. ***Crankshaft position sensor***
      7. ***Throttle position sensor***
      8. ***Intake sensor***

   6) Check that actual ignition timing is changed with engine RPM increased.

https://www.forkliftpdfmanuals.com/

INSPECTION OF IGNITION COIL

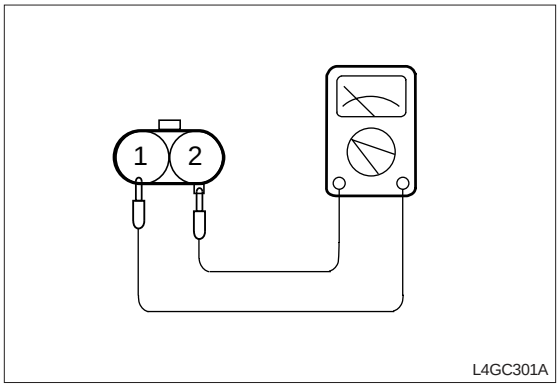

1. 1ST coil resistance measurement
   Measure resistance between no.1 and no.3 terminals of ignition coil. (For no.1 and no.4 cylinders)
   And measure resistance between no.3 and no.2 terminals of ignition coil. (For no.2 and no.3 cylinders)

   1A. 1ST coil resistance measurement

1ST coil resistance	0.5° ± 0.05Ω

   Measure resistance between no.1 and no.2 terminals of ignition coil.

2. 2ST coil resistance measurement
   Measure resistance between high pressure terminals.

2ST coil resistance	12.1 ± 1.8KΩ

   CAUTION
   When measuring 2nd coil resistance, remove the ignition coil connector.

https://www.forkliftpdfmanuals.com/

INSPECTION OF SPARK PLUG

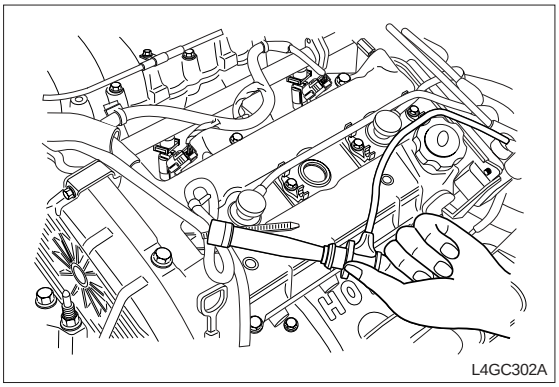

L4GC302A

Inspection and clean

1. Disconnect the spark plug cable from the spark plug. Remove the spark plug cable by pulling the cable cap with hand.
2. Remove all spark plugs from the cylinder head using a spark plug wrench.

   CAUTION
   Take care not to come foreign materials into spark-plug mounting hole.

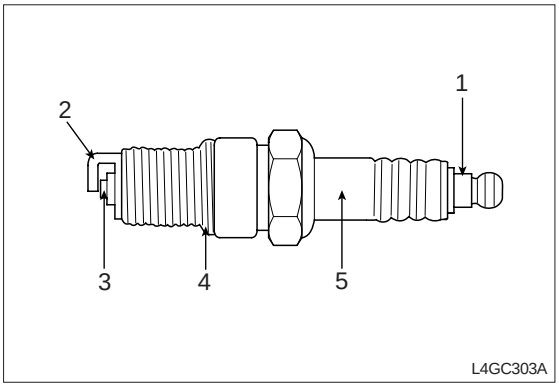

L4GC303A

3. Check the spark plug as below.
   1) Insulator broken
   2) Terminal worn
   3) Carbon deposit
   4) Gasket damaged or broken
   5) Porcelain insulator of spark plug clearance

4. Check the plug clearance using a plug clearance gauge and if the value is not within the specified values, adjust it by bending the ground clearance. When installing a new spark plug, install it after checking the uniform plug clearance.

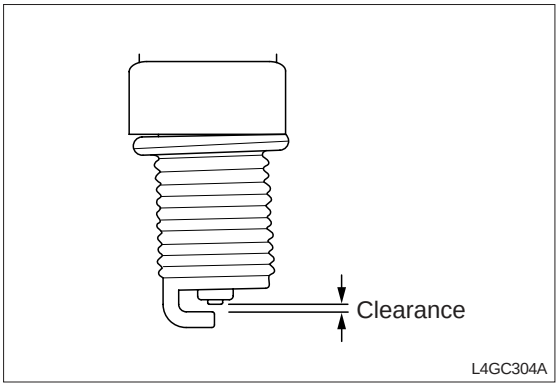

L4GC304A

Spark plug clearance	0.7 ~ 0.8mm

5. Install the spark plug and tighten it to the specified torque. Take care not to over tighten it to prevent cylinder head threads from damage.

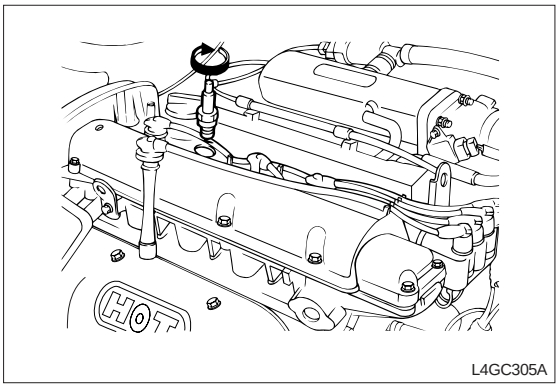

L4GC305A

Tightening torque	2 ~ 3kg·m

https://www.forkliftpdfmanuals.com/

SPARK PLUG ANALYSIS

State	Contact point is black	Contact point is white
Description	•Density of the fuel mixture is thick •Lack of air intake	• Density of the fuel mixture is thin •Ignition timing is fast •Spark plug is tight •Lack of torque

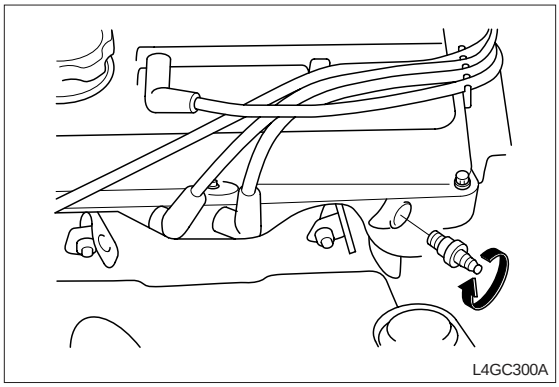

SPARK PLUG TEST

After connecting the spark plug to the high tension cable, connect the outer terminal(main body) to the ground and crank the engine. Because the discharging clearance is narrow in the air, only slight spark will arise. But if the spark plug is normal, spark arises at emission clearance (between terminals), and if the spark plug is defective, spark does not arise because insulation is damaged.

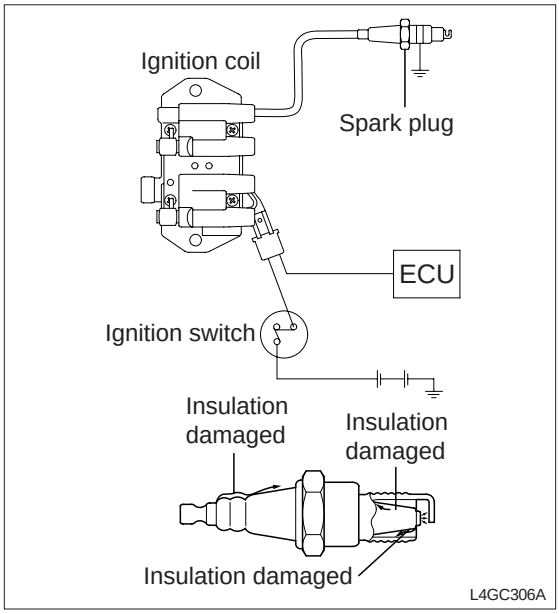

https://www.forkliftpdfmanuals.com/

SPARK PLUG CABLE

INSPECTION

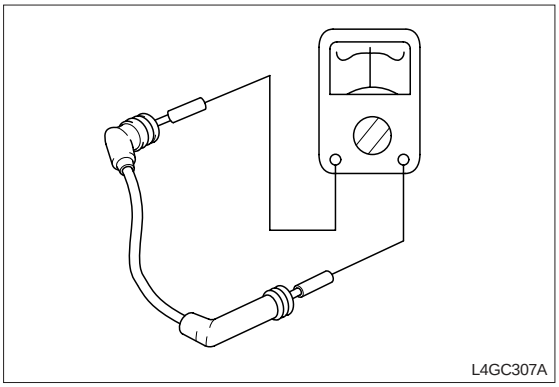
L4GC307A

1. Check the cap for outer crack.
2. Measure resistance.
3. Inspect resistance.

Spark plug cable

NO.1	11.2kΩ
NO.2	9.5kΩ
NO.3	6.9kΩ
NO.4	5.5kΩ

TEST

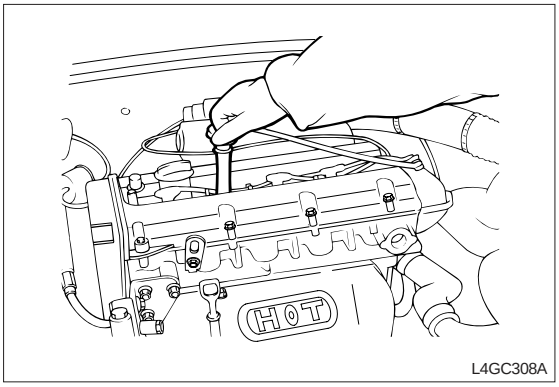

L4GC308A

1. With the engine at idle, disconnect the spark plug cable one by one and inspect change of the engine performance each time.

   CAUTION
   At this time, put on the gloves.

2. If engine performance is not changed, inspect the spark plug cable for resistance and the spark plug itself.

https://www.forkliftpdfmanuals.com/

CHARGING SYSTEM

GENERAL

Charging system consists of battery, alternator with a built-in regulator, charging warning lamp and wire.

Because there are 6 diodes (3 (+) diodes, 3(-) diodes) built in alternator, AC current is rectified to DC current and DC current is detected in "B" terminal of alternator. Charging voltage from alternator is controlled by battery voltage detection unit.

Alternator consists of rotor, stator, rectifier, capacitor, brush, bearing, and V-ribbed pulley cover and Electronic voltage regulator is built in brush holder.

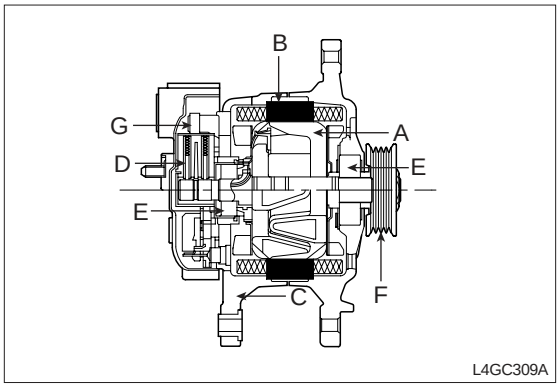

L4GC309A

COMPONENTS

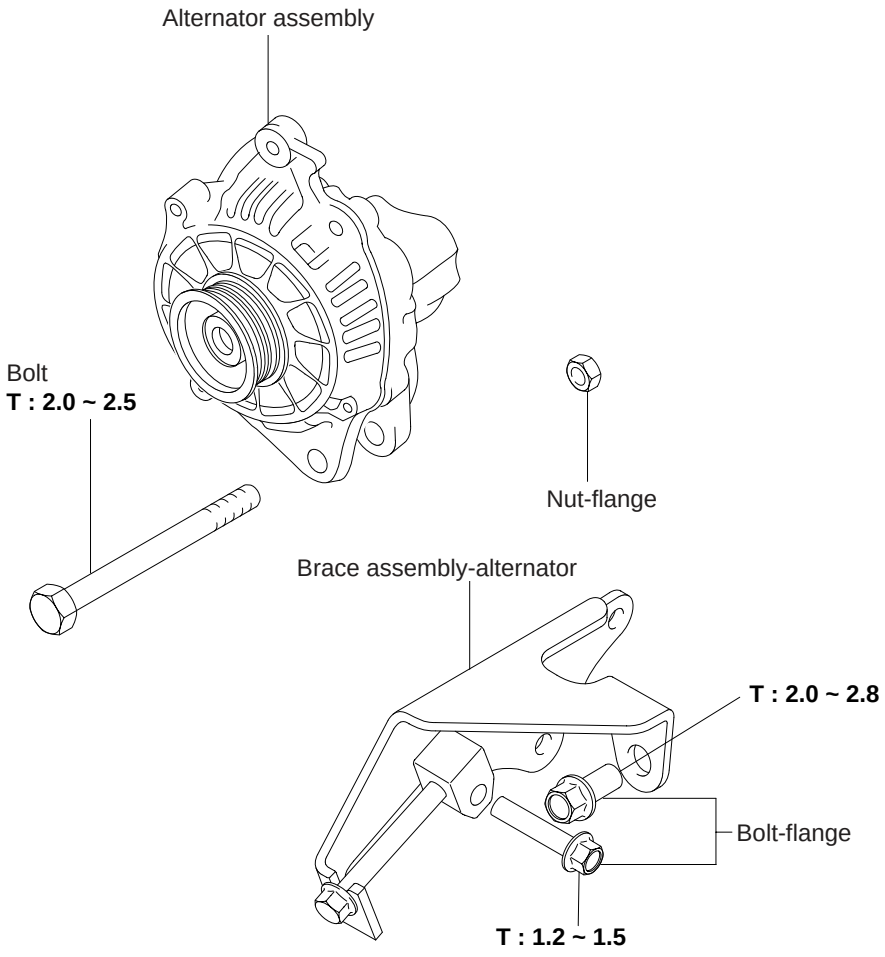

Tightening torque : kg·m

L4GC310A

https://www.forkliftpdfmanuals.com/

TROUBLESHOOTING

Charging system defect is almost caused by lack of pan belt tension and faulty function of wiring, connector, and voltage regulator.
One of most important thing during troubleshooting of charging system is determining the reason between overcharging and lack of charging. So, prior to inspection of alternator, check the battery for charging. Faulty alternator causes the following symptoms.

1. Faulty battery charging
   1) IC regulator fault(Short circuit)
   2) Field coil fault
   3) Main diode fault
   4) Auxiliary diode fault
   5) Stator coil fault
   6) Brush contact fault

2. Overcharging : IC regulator fault(Short circuit)
   Other faults such as voltage adjusting problem except above symptoms rarely happen.
   Refer to the following troubleshooting table.

Symptom	Possible cause	Remedy
With ignition switch ON, charging warning lamp does not illuminate	Fuse cut off	Replace
	Bulb burnt out	Replace
	Loose wiring connection	Retighten
	Bad connection of L-S terminals	Inspect and replace wiring, Replace voltage regulator
With the engine started, warning lamp is not turned off (Battery needs often charging)	Loose or worn drive belt	Correct or replace
	Fuse cut off	Replace
	Fuse link cut off	Replace
	Faulty voltage regulator or alternator	Inspect alternator
	Faulty wiring	Repair
	Corrosion or wear of battery cable	Repair or replace
Overcharged	Faulty voltage regulator (Charging warning lamp illuminates)	Replace
	Voltage detection wring fault	Replace
Battery is discharged	Loose or worn drive belt	Correct or replace
	Loose wiring connection	Retighten
	Short circuit	Repair
	Fusible link cut off	Replace
	Ground fault	Repair
	Faulty voltage regulator (Charging warning lamp illuminates)	Inspect alternator
	Battery out	Replace

https://www.forkliftpdfmanuals.com/

TROUBLESHOOTING PROCEDURE

INSPECTION BEFORE STARTING

1. Charging warning lamp inspection

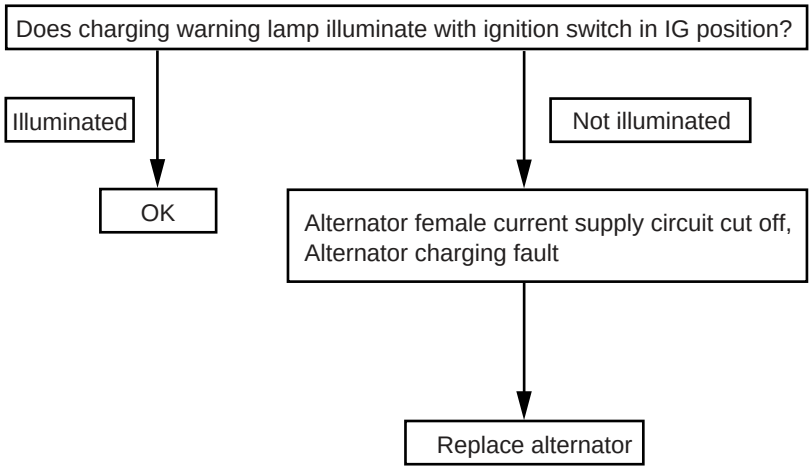

L4GC311A

2. Alternator and drive belt tension inspection

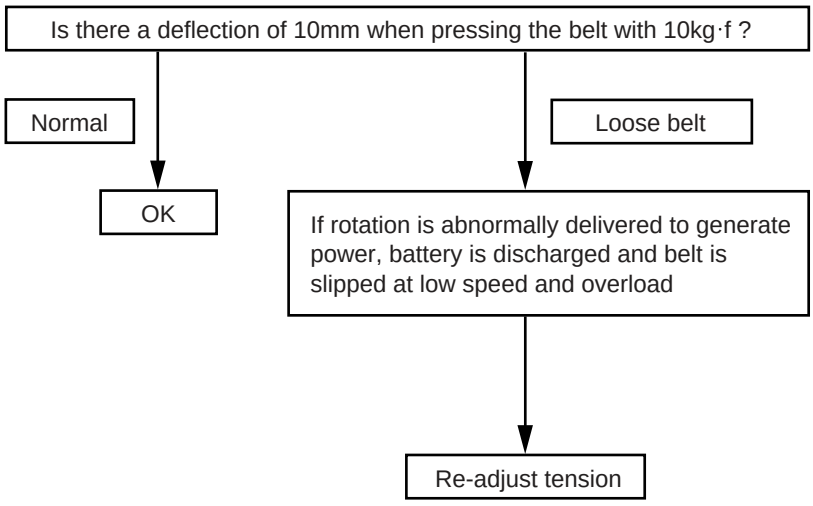

L4GC312A

https://www.forkliftpdfmanuals.com/

3. Alternator and outer terminal connection inspection

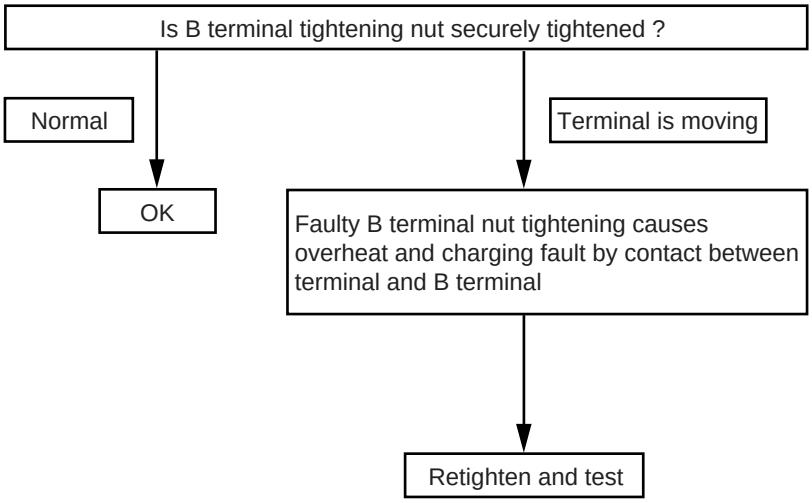

L4GC313A

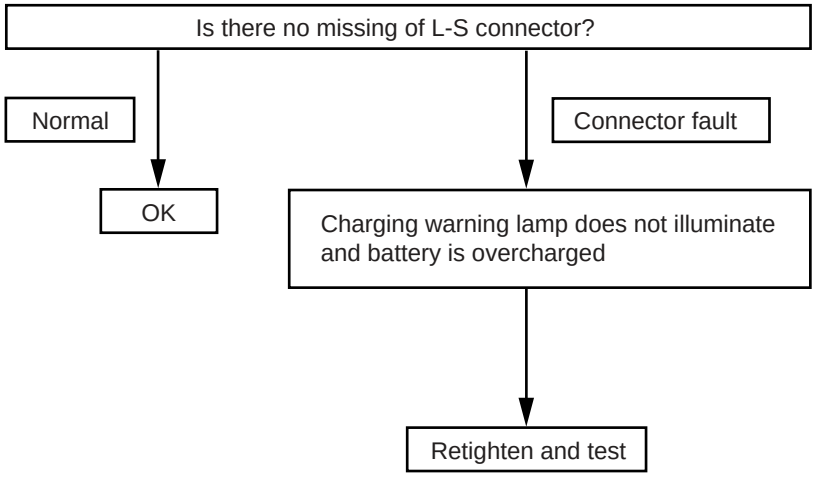

L4GC314A

4. Battery outer terminal inspection

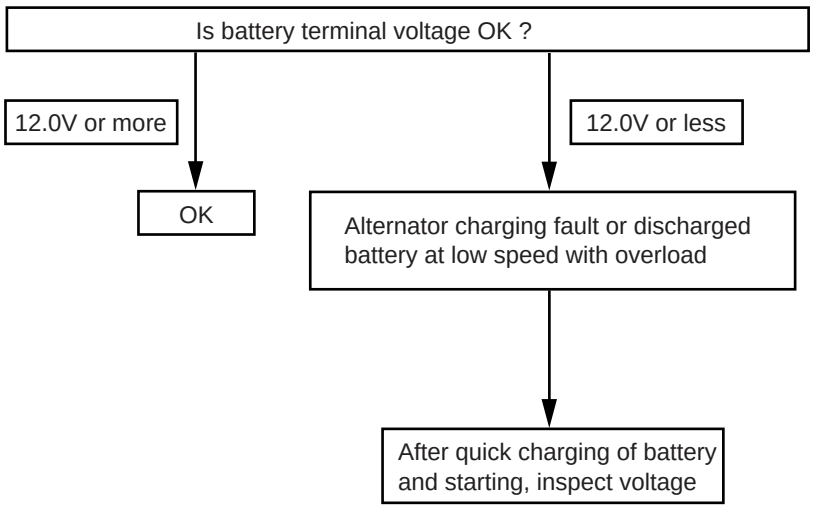

L4GC315A

https://www.forkliftpdfmanuals.com/

INSPECTION AFTER STARTING

1. Inspection of alternator charging warning lamp operation test

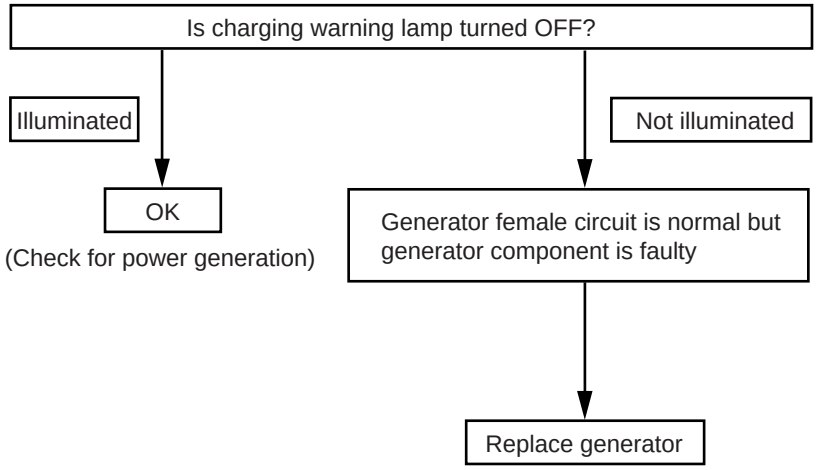

L4GC317A

2. When starting, belt slip and noise inspection

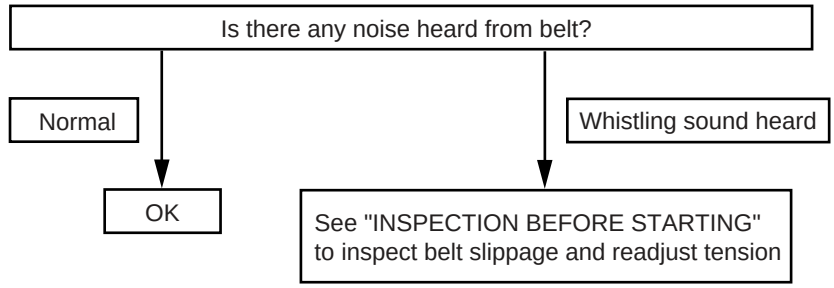

L4GC318A

3. Inspection of battery voltage at idling
(At this time charge battery only)

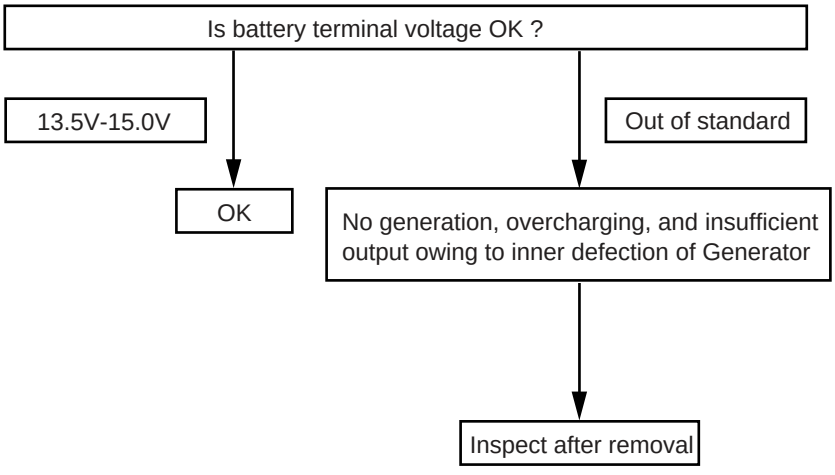

L4GC319A

https://www.forkliftpdfmanuals.com/

DROP OF ELECTRIC PRESSURE TEST OF ALTERNATOR OUTPUT WIRE

This test is to check that wiring is correctly connected between the alternator "B" terminal and battery (+) terminal.

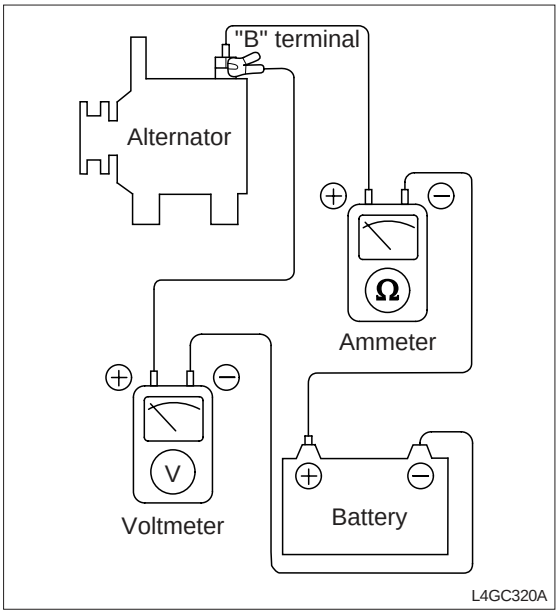

PREPARATION

1. Turn the ignition switch OFF.
2. Disconnect the battery ground cable.
3. Disconnect the alternator output wire from the alternator "B" terminal.
4. Connect a DC ampere meter (0-100A) between the terminal and the disconnected output wire.
   Connect (+) lead wire to the terminal "B" and (-) lead wire to the disconnected output wire.

   NOTE

   In case of using a clamp type ammeter, it is possible to measure current without disconnecting the harness.
5. Connect a digital voltmeter between the alternator "B" terminal and the battery (+) terminal.
   Connect (+) lead wire to the terminal "B" and (-) lead wire to the battery (+) terminal.
6. Connect the battery ground cable.
7. Be sure that the hood is opened.

TEST

1. Start the engine.
2. Repeating ON and OFF of headlight and small light, adjust the engine speed until an ammeter reads 20A and at that time measure voltage.

https://www.forkliftpdfmanuals.com/

RESULT

1. If voltmeter reading is within the standard, it is normal.

Test voltage	Maximum 0.2V

2. If voltmeter reading is more than the standard, mostly wiring is faulty. In this case, inspect wirings between the alternator and the battery (+) terminal as well as between the alternator "B" terminal and the fusible link.
3. Also prior to re-test, check and repair the connecting part for looseness and the harness for discoloration by overheating.
4. After test, adjust the engine speed at idle and turn the light and ignition switch OFF.
5. Disconnect the battery ground cable.
6. Disconnect the ammeter and voltmeter.
7. Connect the alternator output lead wire to the alternator "B" terminal.
8. Connect the battery ground cable.

OUTPUT CURRENT TEST

This test is to check that the alternator output current is identified with the rated current.

PREPARATION

1. Prior to test, inspect the following items and repair if necessary.

   1) Be sure that the battery installed in the vehicle is normal.(See "Battery")

      NOTE
      When measuring output current, necessarily use a slightly discharged battery. Fully charged battery is not enough to use for correct test owing to insufficient load.

   2) Inspect the drive belt for tension. (See "Engine body")
2. Turn the ignition switch OFF.
3. Disconnect the battery ground cable.
4. Disconnect the alternator output wire from the alternator "B" terminal.

https://www.forkliftpdfmanuals.com/

5. Connect a DC ampere meter (0-100V) between "B" terminal and the disconnected output wire.
   Connect (+) lead wire to the terminal "B" and (-) lead wire to the disconnected output wire.

   NOTE
   Do not use clips or equivalent owing to high current and Use bolts and nuts to tighten each connecting part securely.

6. Connect a voltmeter(0-20V) between "B" terminal and the ground.
   Connect (+) lead wire to the alternator "B" terminal and (-) lead wire to the proper position.
7. Connect the engine tachometer and then battery ground cable.
8. Be sure that the hood is opened.

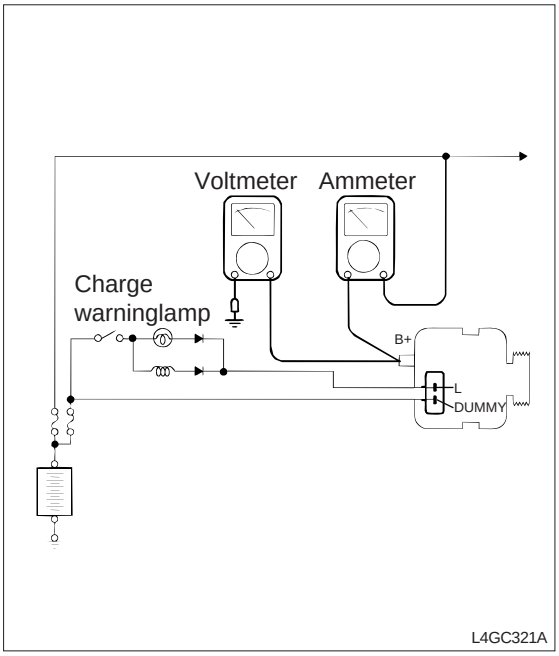

TEST

1. Be sure that voltmeter reading is identified with battery voltage.
   If voltmeter reading is 0V, it means short circuit of wire between "B" terminal and the battery (-) terminal, fusible link cut off or ground fault.
2. Turn the headlight ON and start the engine.
3. With the engine running at 2,500 rpm, turn ON the high beam headlights, place the heater blower switch at "HIGH" measure the maximum output current using a ammeter.

   NOTE
   This test should be done as soon as possible to measure the exact maximum current because output current drops rapidly after starting the engine.

https://www.forkliftpdfmanuals.com/

RESULT

1. Ammeter reading should be higher than the limit. If the reading is low even though the alternator output wire is normal, remove the alternator from the vehicle and inspect it.

Output current limit	70% of rated current

NOTE

- ***The rated output current is represented on the name plate in the alternator body.***
- ***Output current varies according to electrical load or temperature of the alternator, so during test, lack of electrical load causes impossibility of measuring the rated output current. In this case, turn on headlight to induce the battery discharging or turn on other lights to increase the electrical load. If alternator temperature or ambient temperature is too high, it is impossible to measure the rated output current, so prior to re-test, necessarily drop the temperature.***

Ambient temperature of voltage regulator (°C)	Voltage adjust (V)
-20	14.2 ~ 15.4
20	13.8 ~ 15.0
60	13.4 ~ 14.6
80	13.2 ~ 14.4

2. After test, adjust the engine speed at idle and turn the light and ignition switch OFF.
3. Disconnect the battery ground cable.
4. Disconnect the ammeter and voltmeter.
5. Connect the alternator output lead wire to the alternator "B" terminal.
6. Connect the battery ground cable.

https://www.forkliftpdfmanuals.com/

DISASSEMBLY AND INSTALLATION

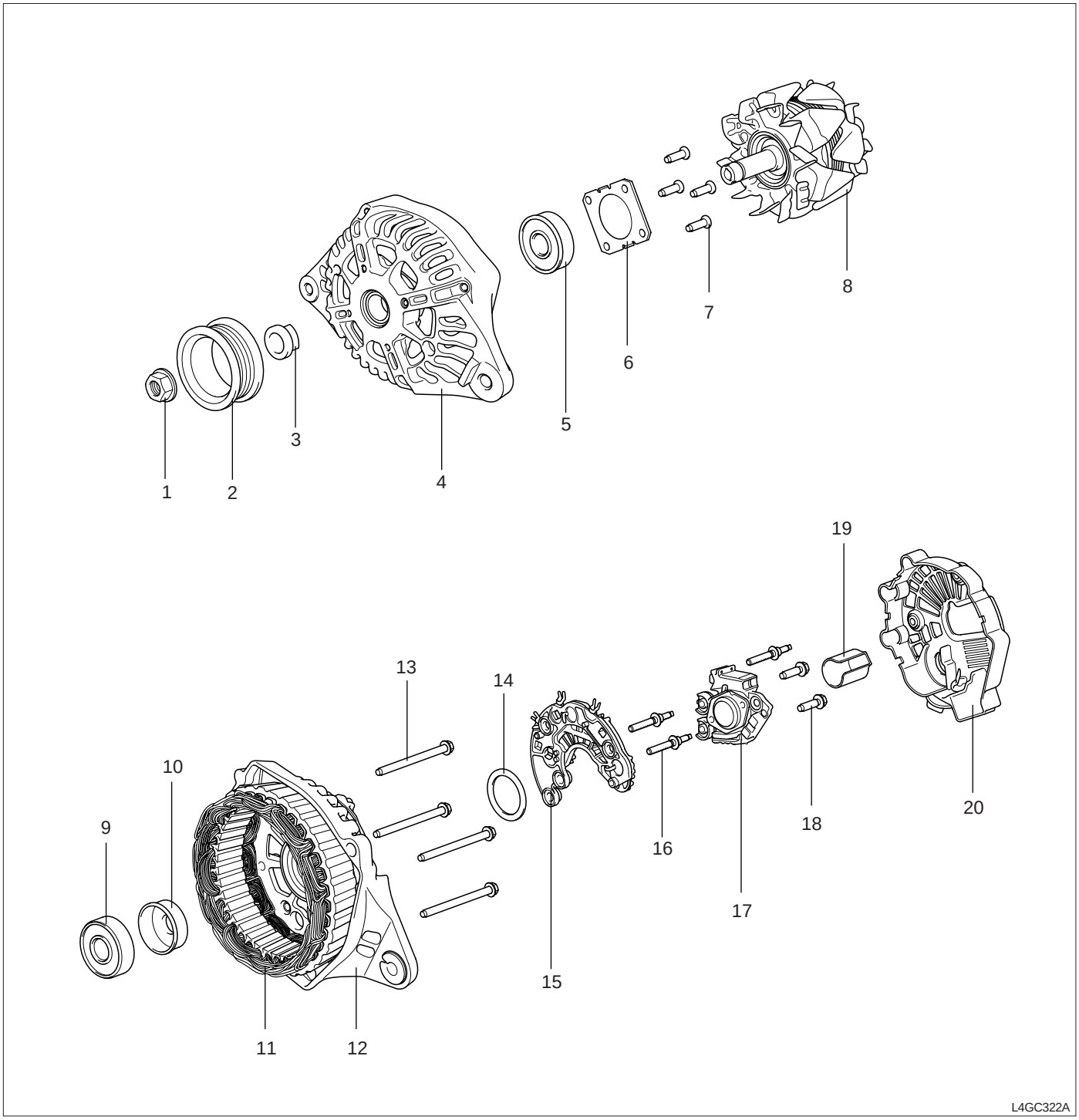

1. Nut
2. Pulley
3. Bushing
4. Front cover assembly
5. Front bearing
6. Bearing cover
7. Bearing cover bolt
8. Rotor coil
9. Rear bearing
10. Bearing cover
11. Stator coil
12. Rear cover
13. Through bolt
14. Seal
15. Rectifier assembly
16. Stud bolt
17. Brush holder assembly
18. Brush holder bolt
19. Slip ring guide
20. Cover

https://www.forkliftpdfmanuals.com/

REMOVAL AND INSTALLATION

1. Disconnect the battery (A) terminal.

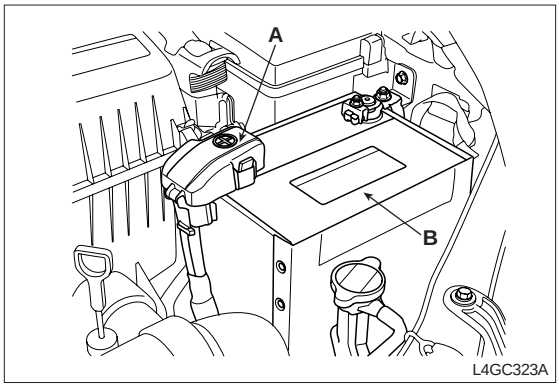

2. Disconnect the alternator "B" terminal and then the connector (A). Loosen the clip (B).

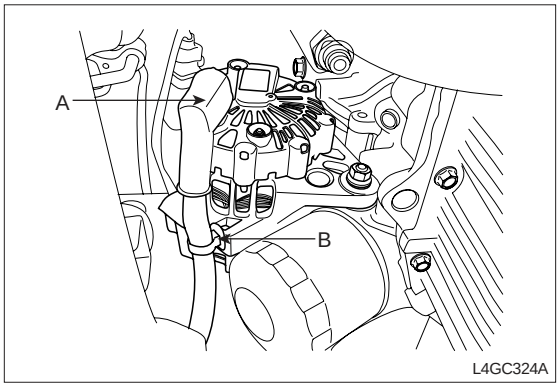

3. Loosen the alternator tension adjusting bolt (A) and the alternator fixing bolt (B).

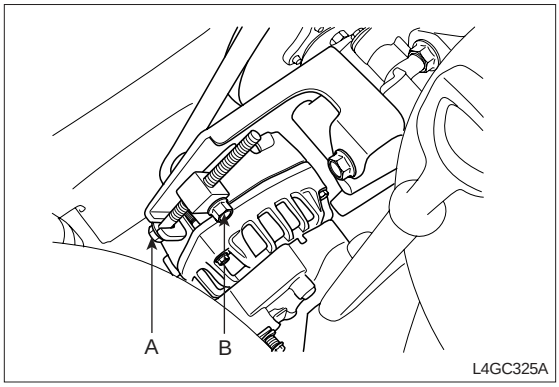

4. Remove the belt by pressing inward the alternator.
5. Remove the alternator brocket.
6. Loosen the mounting and remove the alternator assembly.
7. Installation is reverse order of removal.

https://www.forkliftpdfmanuals.com/

DISASSEMBLY

1. After removing the mounting nuts (B), remove the generator cover (A) using a screwdriver.

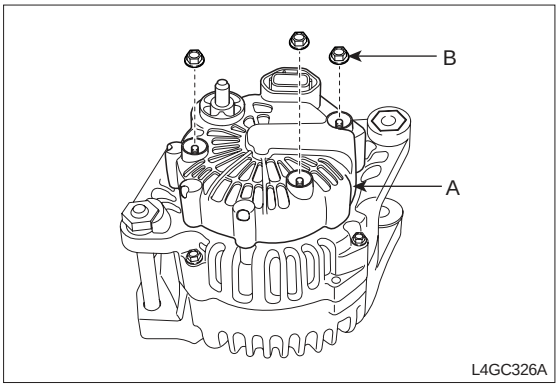

2. Loosen 3 mounting bolts (A) and disconnect the brush holder assembly (B).

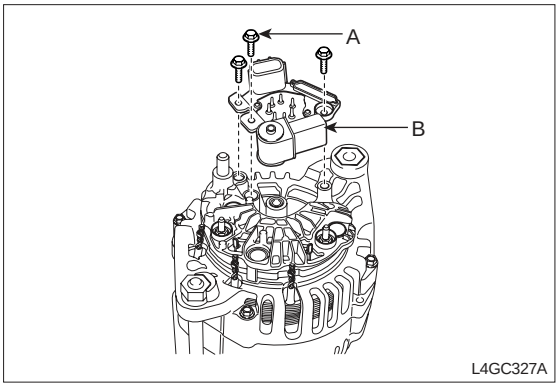

3. Remove the slip ring guide (A).

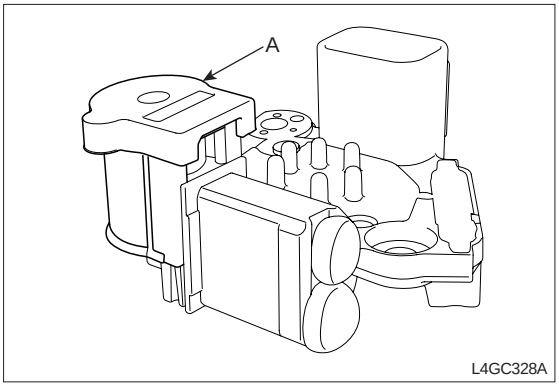

4. Remove the nut, pulley and spacer.

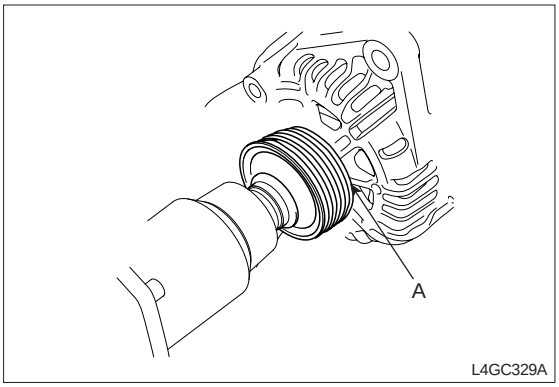

https://www.forkliftpdfmanuals.com/

5. Loosen 4 through bolts.

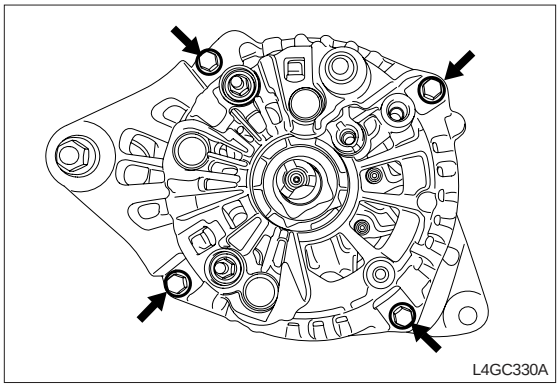
L4GC330A

6. Separate the rotor and cover.

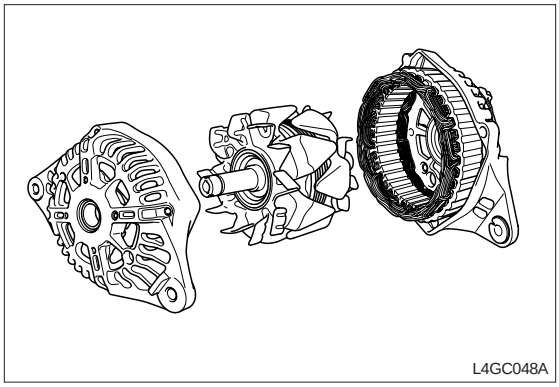
L4GC048A

https://www.forkliftpdfmanuals.com/

INSPECTION

ROTOR

1. Inspect the rotor coil for continuity and check for continuity between slip rings.
   If resistance is too low, circuit is short and if the resistance is too high, circuit is opened. So replace the rotor assembly in both cases.

Resistance value	2.5 ~ 3.0Ω(20°C)

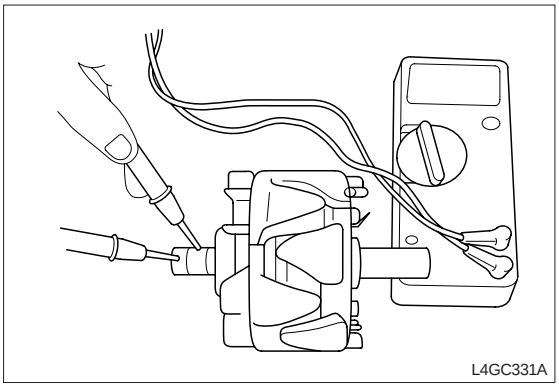
L4GC331A

2. Inspect the rotor coil ground and check continuity between the slip ring and the core. If there is continuity, replace the rotor assembly.

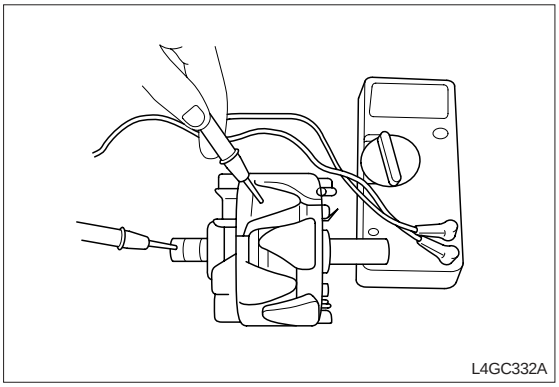
L4GC332A

STATOR

1. Inspect the stator coil for continuity and check continuity between the coil leads. If there is no continuity, replace the stator assembly.

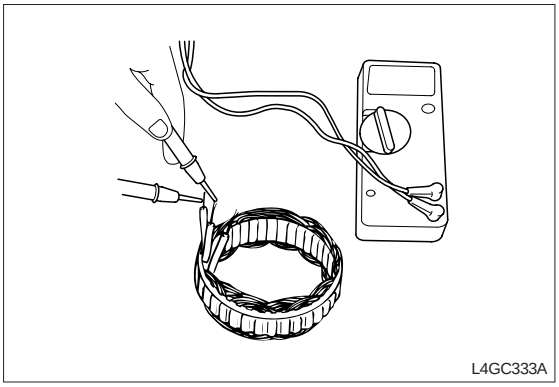
L4GC333A

2. Inspect the coil ground and check continuity between the coil and the core. If there is continuity, replace the stator assembly.

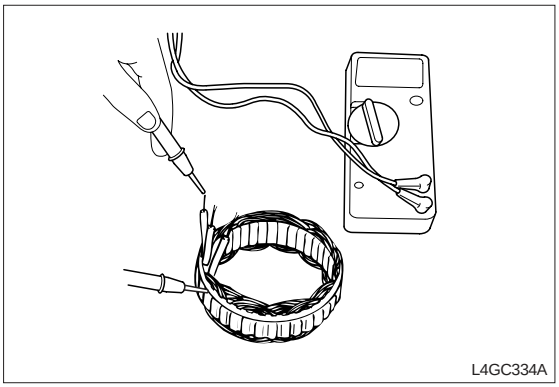
L4GC334A

https://www.forkliftpdfmanuals.com/

RECTIFIER

1. (+) rectifier
   When inspecting continuity between (+) rectifier and stator coil lead connecting terminal using an ohmmeter, there must have only one direction continuity. If there is both direction continuity, replace the rectifier assembly owing to short circuit of diode.

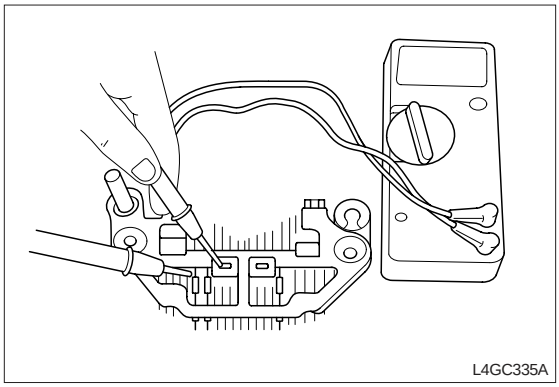
L4GC335A

2. (-) rectifier
   When inspecting continuity between (-) rectifier and stator coil lead connecting terminal using an ohmmeter, there must have only one direction continuity. If there is both direction continuity, replace the rectifier assembly owing to short circuit of diode.

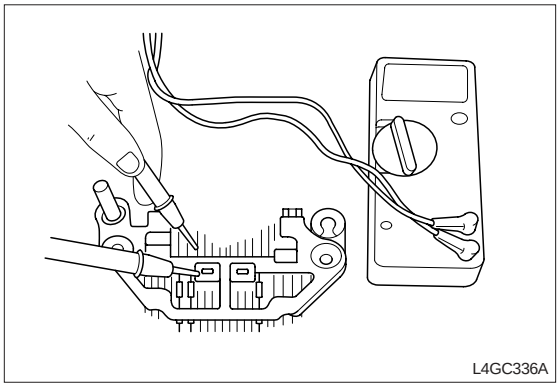
L4GC336A

BRUSH REPLACEMEMENT

If the brush is worn out to the limit, replace the brush as the following order.

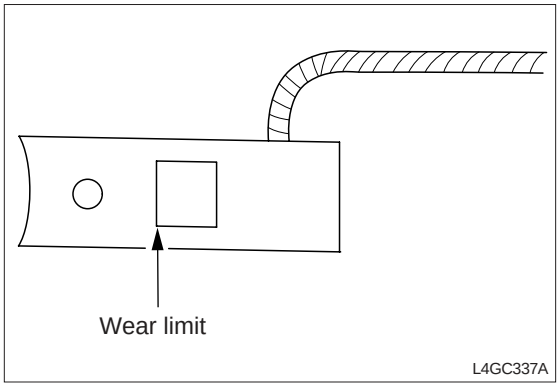

L4GC337A

INSTALLATION

Installation is the reverse order of disassembly. Take care of the following items.

1. Before installing the rotor to the bracket, insert the wire into the small bore of rear bracket and fix the brush.
2. After installing the rotor, remove the wire.

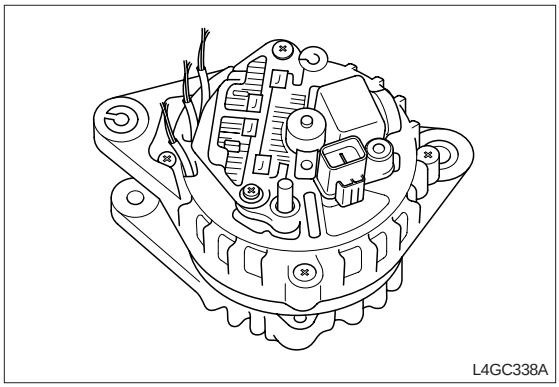
L4GC338A

https://www.forkliftpdfmanuals.com/

INSTALLATION

1. After placing the alternator, insert the support bolt. (At this time do not insert the nut.)
2. After pressing forward the alternator, Contact the alternator front bracket with front case (A) as shown in the illustration.
3. Insert and install the nut by tightening it to the specified torque.

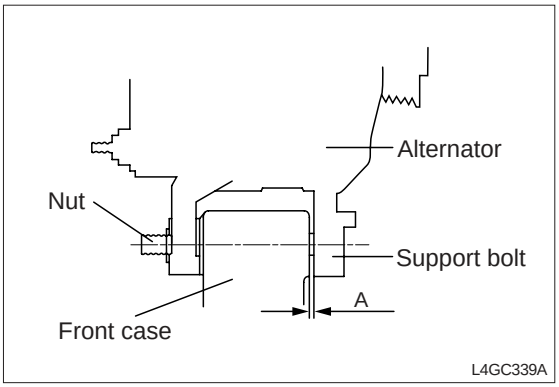

https://www.forkliftpdfmanuals.com/

STARTING SYSTEM

GENERAL

Starting system consists of battery, start motor, solenoid switch, ignition switch, inhibiter switch (Only for A/T), contact wire, and battery case. When the ignition key is turned to "ST" position, current is sending to start motor solenoid coil, the solenoid plunger and clutch shift lever is actuated, and the clutch pinion is engaged with the ring gear resulting in cranking.
When starting the engine, the clutch pinion is overrun to prevent the armature coil from damage by excessive rotation.

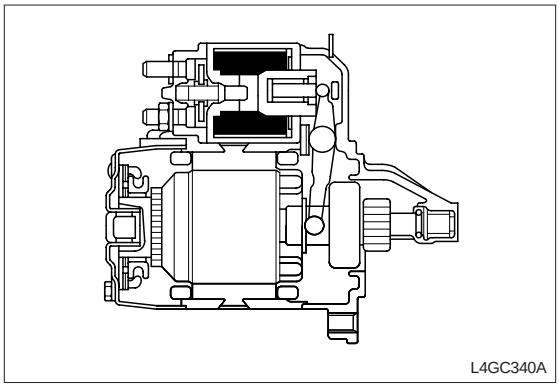
L4GC340A

COMPONENTS

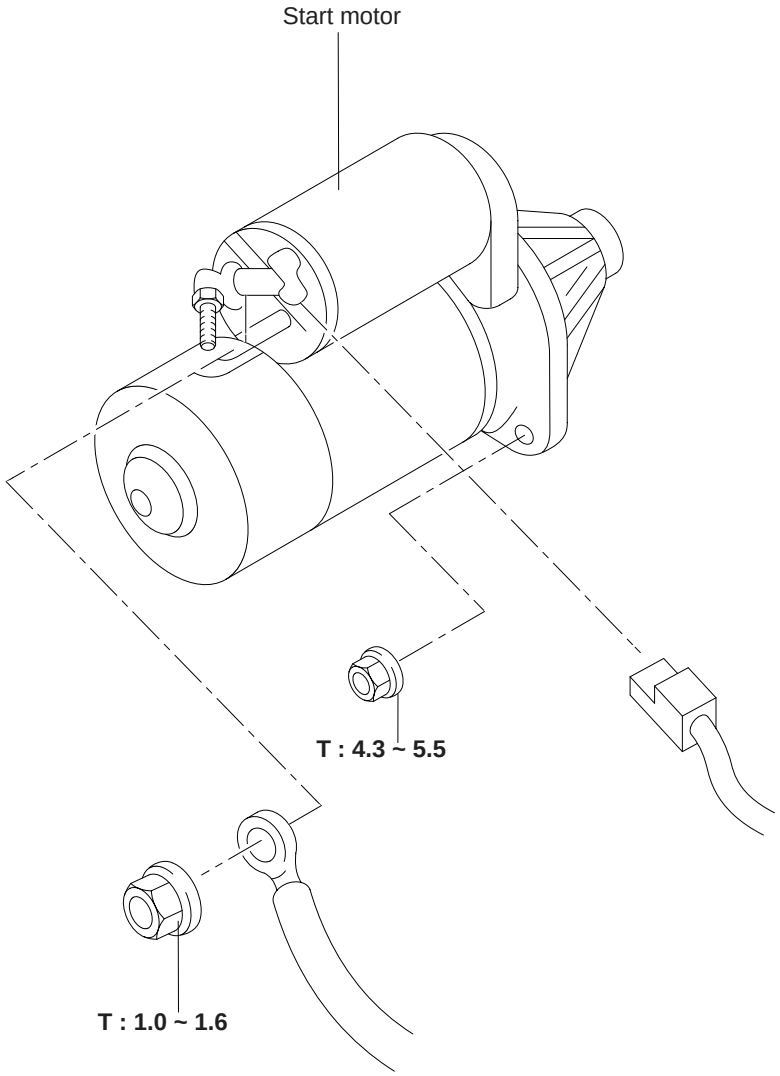

Tightening torque : kg·m

L4GC341A

https://www.forkliftpdfmanuals.com/

TROUBLESHOOTING

Starting system problem can be classified into "Start motor is not operating", "Start motor is operating but engine is not starting", and "There is a lot of time taken to start engine".

When the starting system has problems, before removing the start motor, find where the problem happens. Generally if it is difficult to start, there are problems in ignition system, fuel system, and electrical system. In this case, necessarily inspect and repair step by step, or the same problem will happen.

Symptom	Possible cause	Remedy
Impossible cranking	Low battery charging voltage	Charge or replace
	Loose, corroded or worn battery cable	Repair or replace
	Inhibitor switch fault (With A/T)	Adjust or replace
	Short circuit of fusible link	Replace
	Start motor fault	Repair
	Ignition switch fault	Replace
Slow cranking	Low battery charging voltage	Charge or replace
	Loose, corroded or worn battery cable	Repair or replace
	Start motor fault	Repair
Continuous rotating of start motor	Start motor fault	Repair
	Ignition switch fault	Replace
Start motor is rotating but engine is not cranking	Short circuit of wiring	Repair
	Worn or broken pinion gear tooth or motor fault	Repair
	Worn or broken ring gear tooth	Replace flywheel ring gear or torque converter

START MOTOR

REMOVAL AND INSTALLATION

1. Disconnect the battery ground cable.
2. Remove the speedometer cable.
3. Separate the start motor connector and terminal.
4. Remove the start motor assembly.
5. Installation is the reverse of removal.

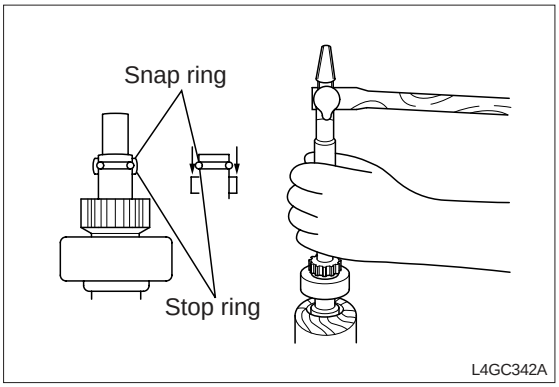

https://www.forkliftpdfmanuals.com/

COMPONENTS

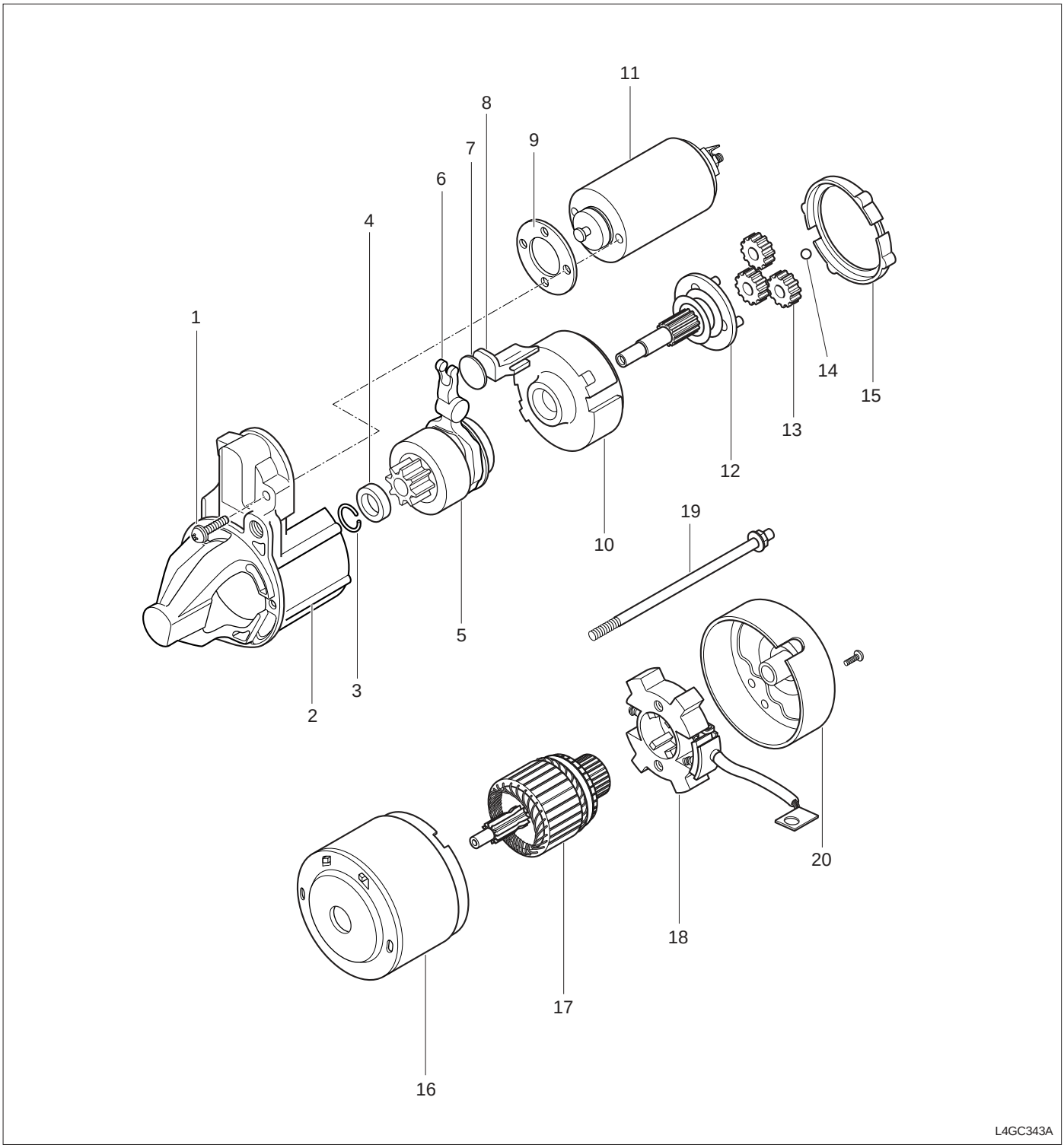

1. Screw
2. Front bracket
3. Stop ring
4. Stopper
5. Overrunning clutch
6. Lever
7. Plate
8. Packing B
9. Shim
10. Internal gear
11. Magnetic switch
12. Planetary gear holder
13. Planetary gear
14. Ball
15. Packing A
16. Yoke assembly
17. Armature
18. Brush holder
19. Through bolt
20. Rear bracket

https://www.forkliftpdfmanuals.com/

INSPECTION (AFTER REMOVAL)

INSECTION OF PINION CLEARANCE

1. Disconnect the wire from "M" terminal.
2. Connect a 12V battery between "S" terminal and "M" terminal.
3. If the switch is turned ON, the pinion is moving.

   CAUTION
   This test should be done as soon as possible not to damage the coil (in 10 seconds).

4. Measure clearance between the pinion and stopper using a feeler gauge. If the measured value is out of the standard, adjust clearance by adding or removing the washer between the magnetic switch and front bracket.

Pinion clearance	0.5 ~ 2.0mm

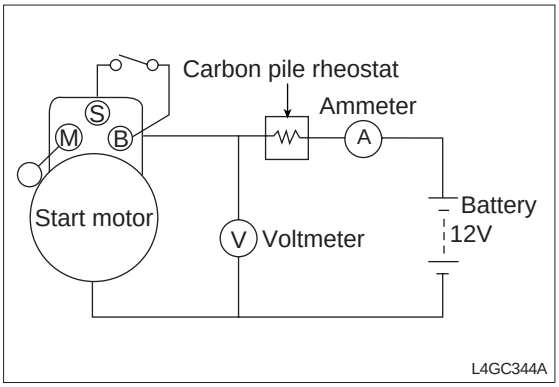

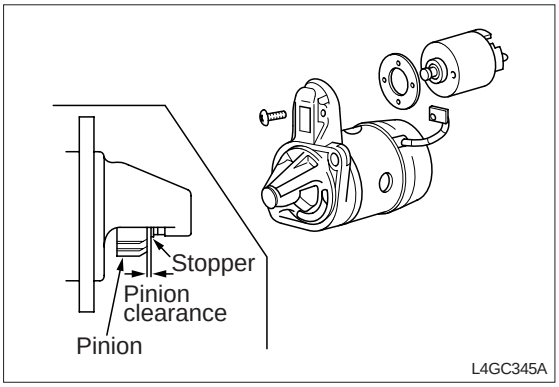

PULL IN TEST OF MAGNETIC SWITCH

1. Disconnect the connector from "M" terminal.
2. Connect a 12V battery between "S" terminal and "M" terminal.

   CAUTION
   This test should be done as soon as possible not to damage the coil (in 10 seconds).

3. If the pinion is moving outward, the coil is normal, if or not, replace the magnetic switch.

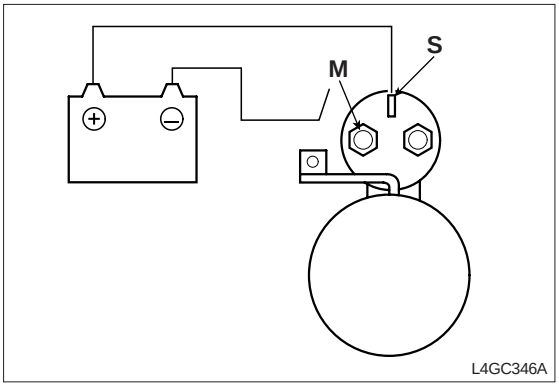

HOLD IN TEST OF SOLENOID

1. Disconnect the connector from "M" terminal.
2. Connect a 12V battery between "S" terminal and "M" terminal.

   CAUTION
   This test should be done as soon as possible not to damage the coil (in 10 seconds).

3. If the pinion is moving outward, the coil is normal, if the pinion is moving inward, replace the magnetic switch owing to open-circuit.

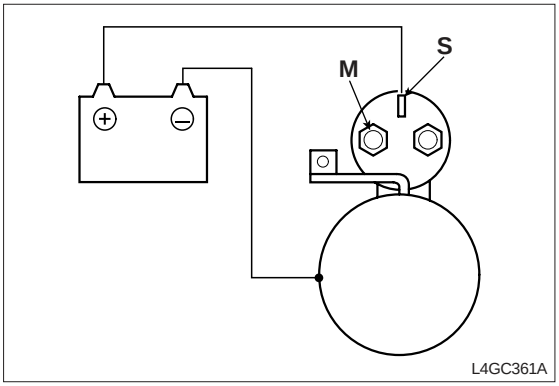

https://www.forkliftpdfmanuals.com/

RETURN TEST OF SOLENOID

1. Connect the connector from "M" terminal.
2. Connect a 12V battery between "S" terminal and "M" terminal.

   CAUTION
   This test should be done as soon as possible not to damage the coil (in 10 seconds).

3. When releasing after pulling the pinion outward, if the pinion is returned to native position, it is normal, if or not, replace the solenoid valve.

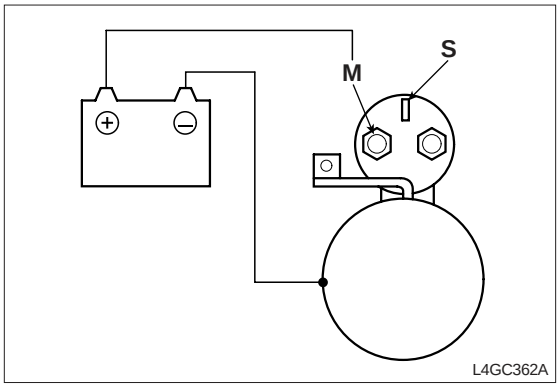

PERFORMANCE TEST (WITH NO-LOAD)

1. Connect a 12V battery to the start motor.
2. To operate the start motor with no load, turn the switch ON. If the operating speed and current measured are identified with the standard, the start motor is normal. If the operating speed is insufficient or the current is excessive, it is because of excessive friction resistance. And the low current or lack of operating speed is because of faulty contact or open circuit between the brush and the rectifier or between the welding points.

Speed	Minimum 3,000rpm
Current	Maximum 60A or less

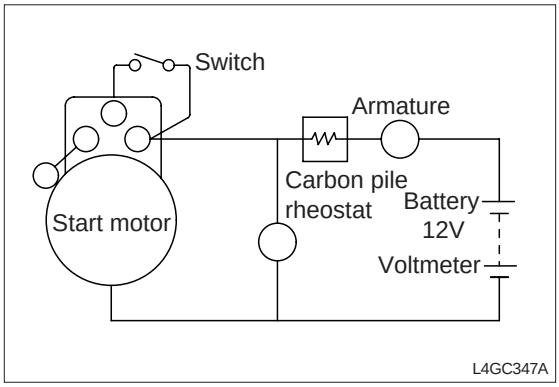

DISASSEMBLY

To remove the overrunning clutch from the armature shaft, remove the stop ring. Remove the stop ring by moving it to the pinion side, and then remove the stop ring from the shaft.

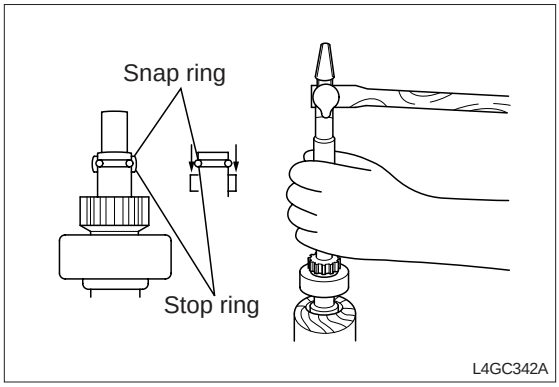

INSPECTION (AFTER DISASSEMBLY)

1. GROUND TEST OF ARMATURE COIL
   Check continuity between the commutator and the armature coil using a circuit tester. If there is continuity, replace the rotor assembly.

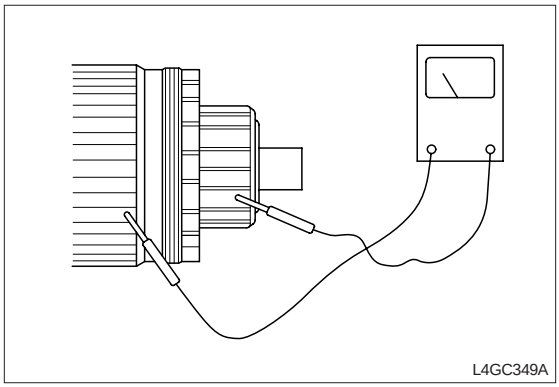

https://www.forkliftpdfmanuals.com/

2. SHORT CIRCUIT TEST OF AMARTURE COIL
Inspect the armature coil in the growler and if there is short circuit, replace the coil. During core rotation, if the blade attached in the core is vibrated, the armature is short.

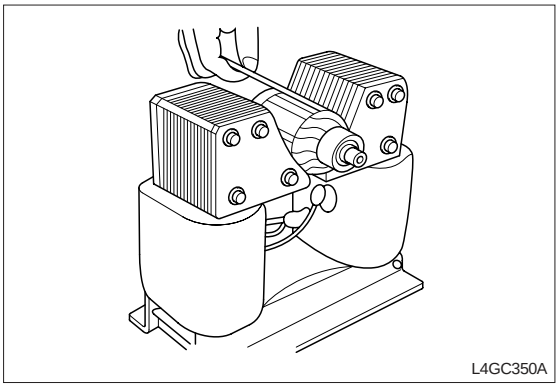
L4GC350A

3. OPEN CIRCUIT TEST OF ARMATURE COIL
Check continuity between the commutator segments using a circuit tester. If there is no continuity, replace the armature assembly owing to open circuit of commutator segment.

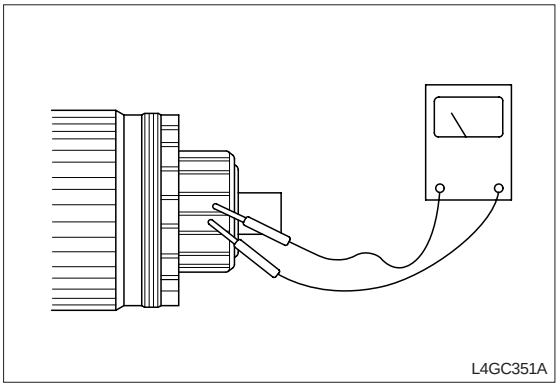
L4GC351A

4. OPEN CIRCUIT TEST OF FIELD COIL
Check continuity of the field coil using a circuit tester. If there is no continuity, replace the field coil assembly owing to open circuit of the field coil.

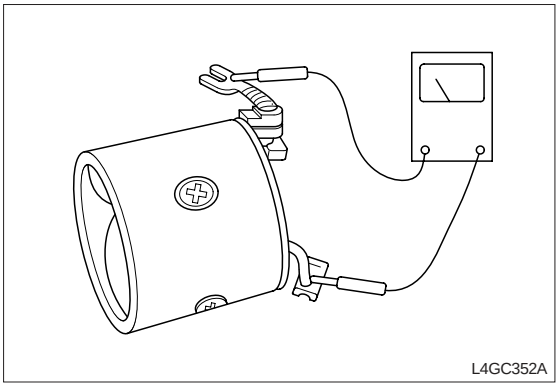
L4GC352A

5. GROUND TEST OF FIELD COIL
With the yoke field coil installed, inspect continuity between the field coil and the yoke, if there is continuity, replace the field coil.

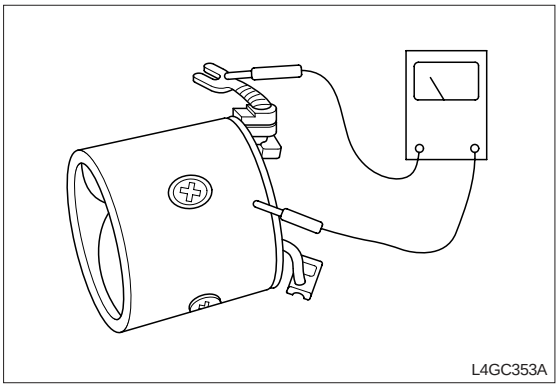
L4GC353A

https://www.forkliftpdfmanuals.com/

6. BRUSH
   If the brush is worn out to the limit, replace the brush.

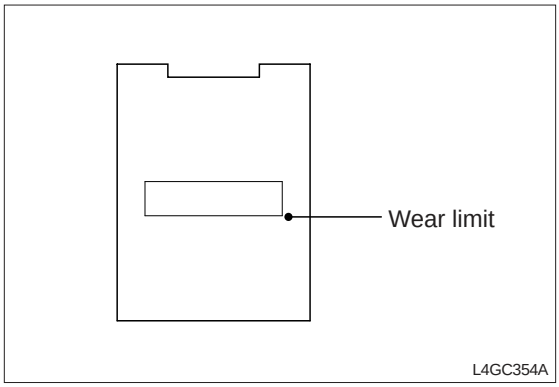

7. BRUSH HOLDER
   Check continuity between the (+) side brush holder and the base. If there is continuity, replace the brush holder assembly.

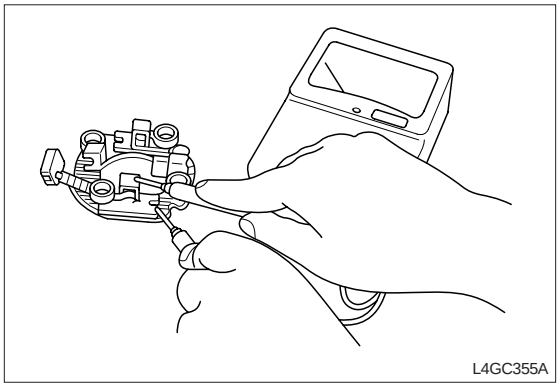

8. OVERRUNNING GLUTCH
   1) Check the pinion and spline teeth for wear and damage and replace it if necessary. Also, inspect the flywheel for wear and damage.
   2) Rotate the pinion. The pinion must be rotated clockwise but counterclockwise.

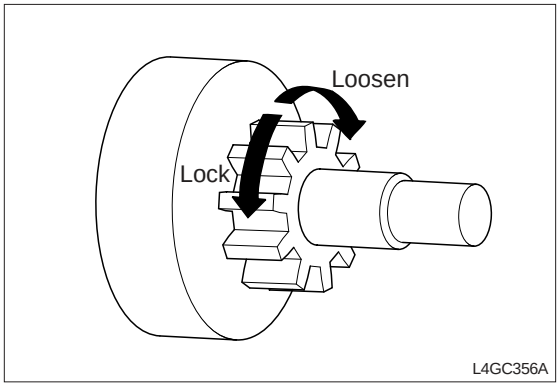

9. BRUSH REPLACEMENT
   1) Remove the worn brush taking care not to damage the pigtail.
   2) For better welding, correct the pigtail end with a sand paper.
   3) Weld the pigtail end.

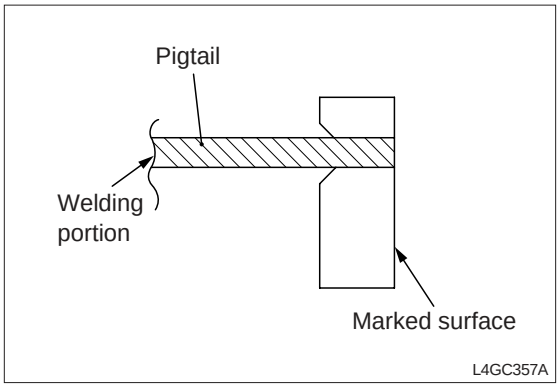

https://www.forkliftpdfmanuals.com/

10. INSTALLATION OF REAR BRACKET

1) Before removing the bushing, measure the bushing press-fit depth.
2) Remove the bushing as shown in the illustration.
3) Press-fit a new bushing as the depth measured procedure 1).

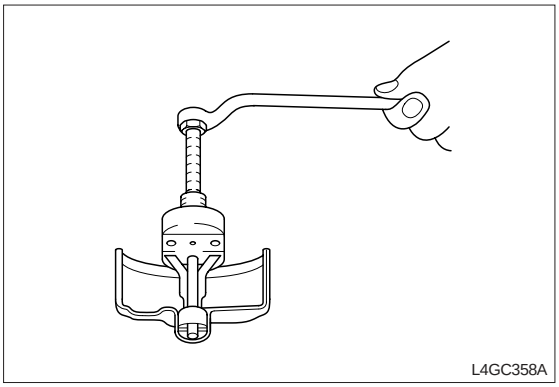

ASSEMBLY

1. Install the overrunning clutch to the armature shaft front end.
2. Install the stop ring and snap ring to the armature shaft front end and completely press the stop ring toward the snap ring.

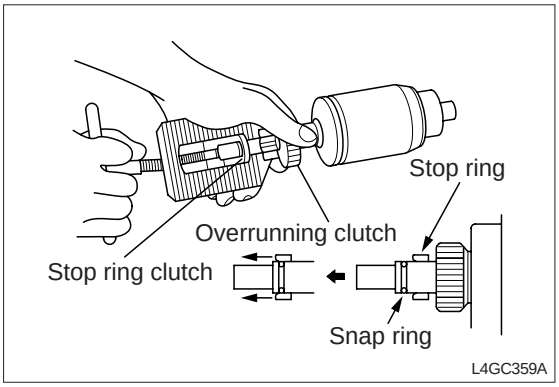

3. When installing the lever to the front bracket, take care of the direction. If the installation direction is in reverse, the pinion will move outward only.

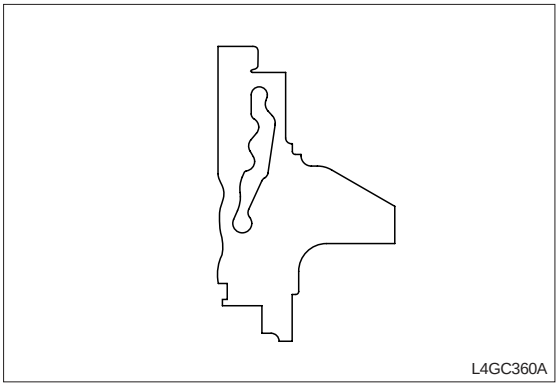

https://www.forkliftpdfmanuals.com/

CHAPTER 4. FULE SYSTEM AND OTHER

1. GENERAL 4- 1

2. INJECTOR 4- 14

4. PVC VALVE 4- 16

https://www.forkliftpdfmanuals.com/

GENERAL

SPECIFICATIONS

Item			Specification
Fuel filter		Type	High pressure type
Fuel pump (Including fuel filter)		Type	Tank built-in electric type
		Driving	Electric motor
Input sensor	Map sensor	Type	Piezo electric type
		Output voltage	0.8-1.1V(at idle)
			4.5-5V(opened)
	Intake temperature sensor	Type	Thermostat type
		Resistance	2.0Ω - 3.0Ω(at 20°C)
	Water temperature sensor (WTS)	Type	Thermostat type
		Resistance	3.4V (at 20°C)
			2.7V (at 40°C)
	Oxygen sensor	Type	Zirconia sensor (Heater built in type)
		Output voltage	0 - approx. 1V
	Hole sensor (#1 TDC sensor)	Type	Hole effector type
		Output voltage	0~5V
	Crankshaft position sensor	Type	Magnetic type
		Output frequency	IDLE rpm : 600 ~ 800Hz
			3000 rpm : 2700 ~ 3300Hz
Output actuator	Injector	Type	Electric-magnetic type
		Number	4
		Coil resistance	14.5±0.35Ω(20°C)

SEALANTS

Item	Specified sealant
Water temperature assembly	LOCTITE 962T

https://www.forkliftpdfmanuals.com/

INSPECTION STANDARD

Item		Standard
Ignition timing (2.0DOHC)		BTDC 2° ± 5°
RPM (2.0DOHC)	Neutral, N, P A/CON OFF	700 ± 100rpm

TIGHTENING TORQUE

Item	Specified value (kg·m)
Water temperature sensor	1.5 ~ 2.0
Oxygen sensor	5.0 ~ 6.0
Fuel supply pipe mounting bolt	1.0 ~ 1.3
Throttle body mounting bolt	1.5 ~ 2.0
High pressure hose and pipe tightening	2.5 ~ 3.4

SPECIAL TOOLS

Special tool	Configuration	Use
Fuel pressure gauge and hose (09353-24100)	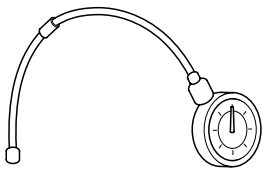 L4GC250A	Connection of fuel pressure gauge and fuel supply pipe
Fuel pressure gauge adaptor (09353-38000)	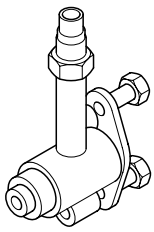 L4GC251A	
Fuel pressure gauge connector (09353-24000)	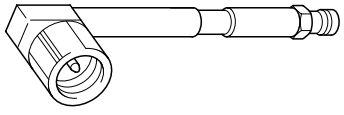 L4GC252A	

https://www.forkliftpdfmanuals.com/

TROUBLESHOOTING

When inspecting and repairing the engine, start from the basic unit. If symptoms happen such as (A) engine is not starting (B) irregular idling (C) insufficient acceleration, inspect the basic unit as below.

1. POWER
   1) Battery
   2) Fusible link
   3) Fuse
   4) Injector
2. BODY GROUND
3. FUEL SUPPLY
   1) Fuel line
   2) Fuel filter
   3) Fuel pump
4. IGNITION SYSTEM
   1) Spark plug
   2) High tension cable
   3) Ignition coil
   4) Crankshaft position sensor
5. EMISSIONS CONTROL SYSTEM
   1) PCV system
   2) Vacuum leak
6. OTHER
   1) Ignition timing check
   2) RPM
7. In case of faulty MPI system, it is caused by bad contact of harness sometimes, so inspect the connecting portion.

https://www.forkliftpdfmanuals.com/

INSTRUCTION FOR MPI INSPECTION

1. When checking the alternator for charging, never remove battery (+) terminal.
   (If peak voltage of alternator is not absorbed by battery, it is possible to burn out ECU power terminal element.)
2. 1. When inspecting circuit, use a digital multi-meter or a LED of 1MΩ or more.
   (When using normal valve, if heavy load current is sent to ECU, it is possible to burn out driving TR.)
3. When disconnecting ECU harness, necessarily turn Ignition switch OFF.
   (It is possible to damage ECU element by surge.)
4. When removing battery terminal, turn Ignition switch OFF.
   (It is possible to damage ECU element by surge.)
5. When checking A/CON for operation, use a hi-scan and when from the outside (relay driving source), use its harness tool.
   (It is possible to burn out ECU.)
6. When welding vehicle body, necessarily remove ECU first.
   (It is possible to damage ECU element by surge.)
7. When charging battery from outside charger, remove battery (vehicle side) terminal.
   (If supply voltage exceeds rated voltage of EUC, It is possible to burn out ECU.)
8. When charging battery or starting engine with outside charging power, never use it of 16V or more.
   (If supply voltage exceeds rated voltage of EUC, It is possible to burn out ECU.)
9. For circuit test, do not use sensor ground as earth.
   (If heavy load current is run to sensor ground, It is possible to burn out PCB ground circuit.)

https://www.forkliftpdfmanuals.com/

MPI TROUBLESHOOTING PROCEDURE

SYMPTOM

- **ENGINE IS NOT STARTING**

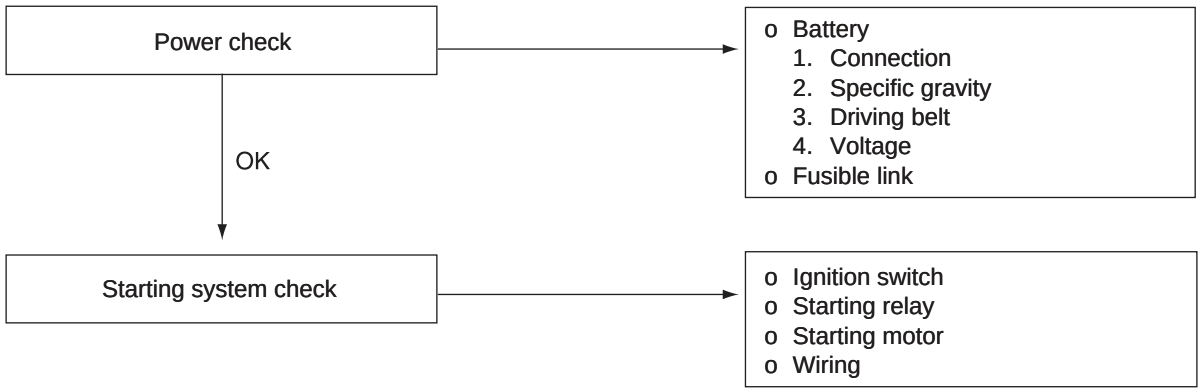

L4GC253A

- **ENGINE IS DIFFICULT TO START(CRANKING OK)**

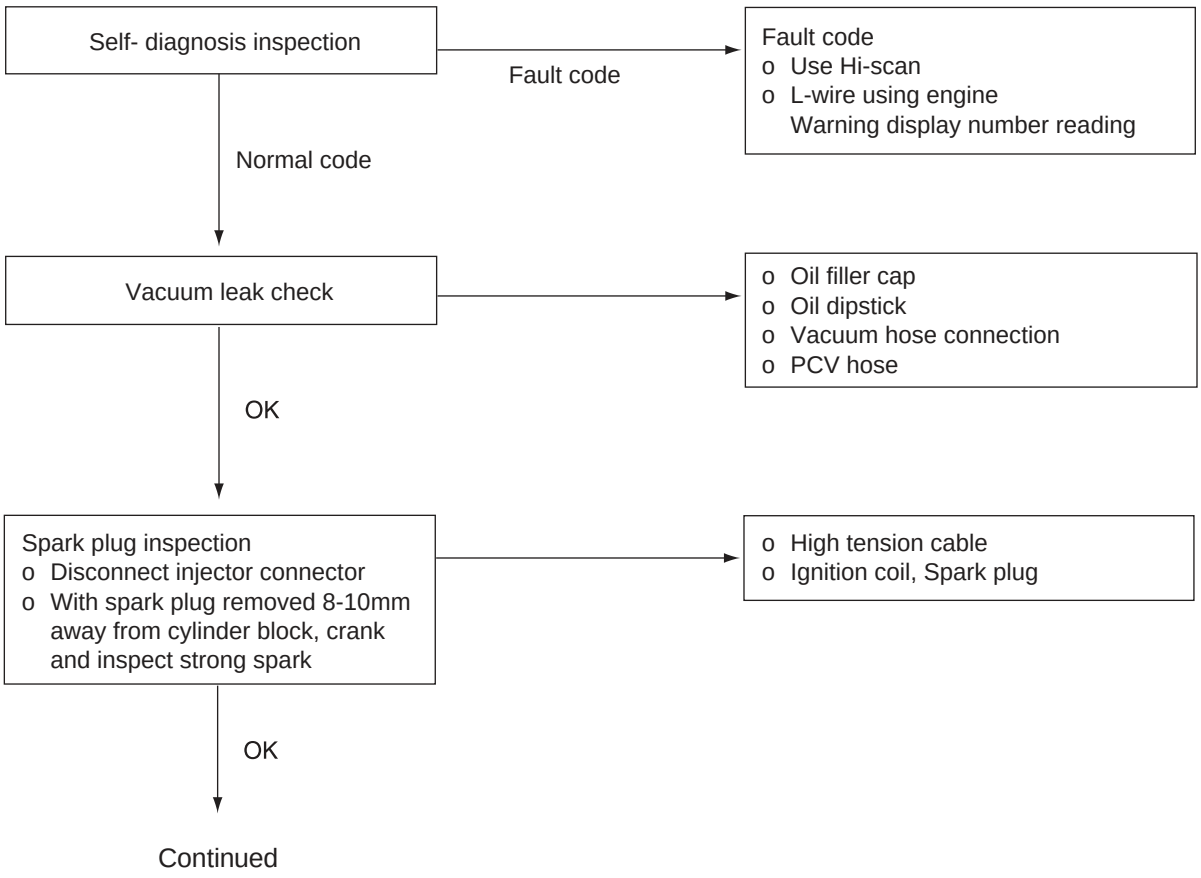

https://www.forkliftpdfmanuals.com/

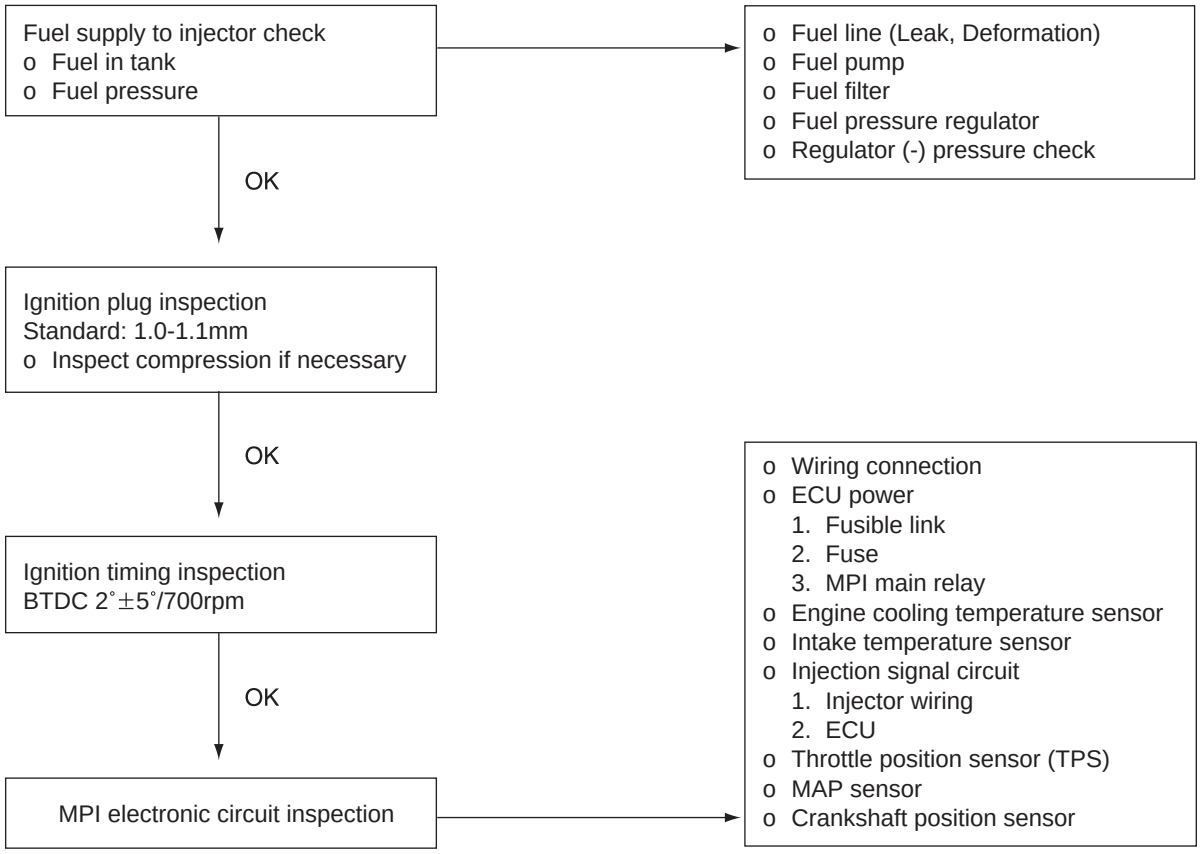

L4GC254A

- **IRREGULAR IDLING OR ENGINE IS SUDDENLY STOPPED**

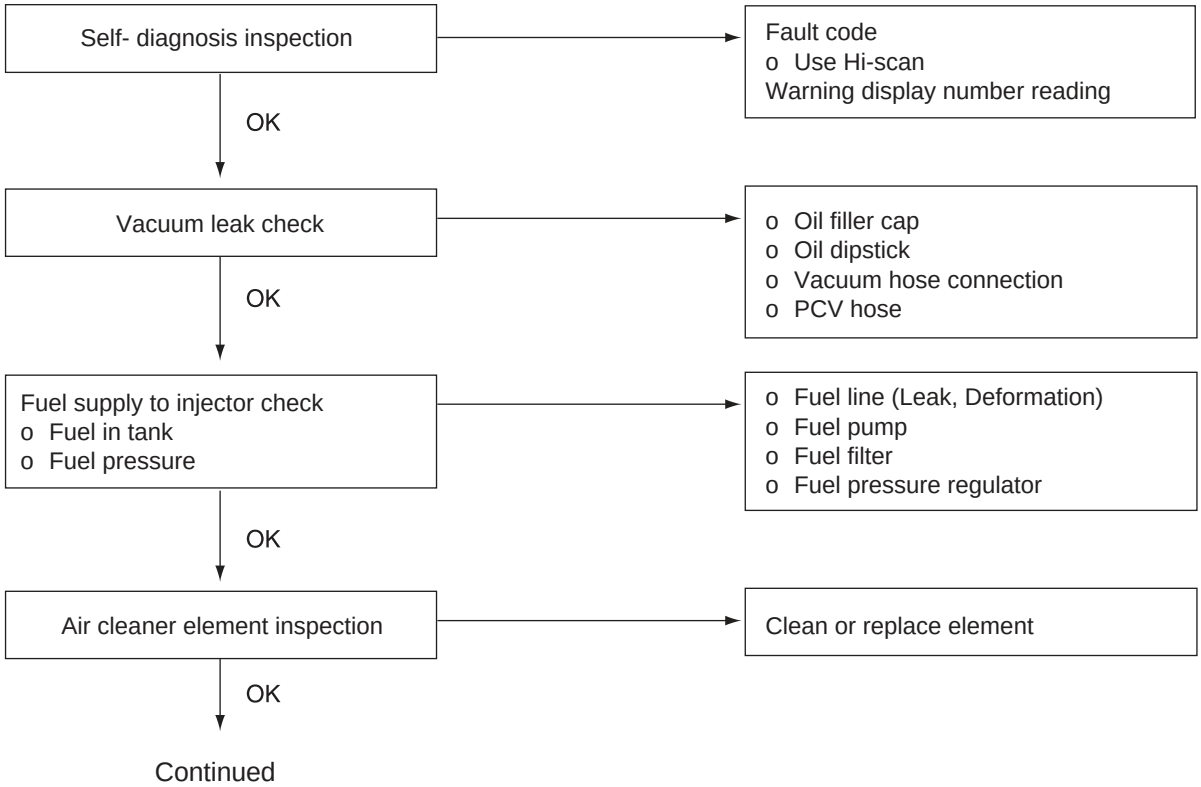

https://www.forkliftpdfmanuals.com/

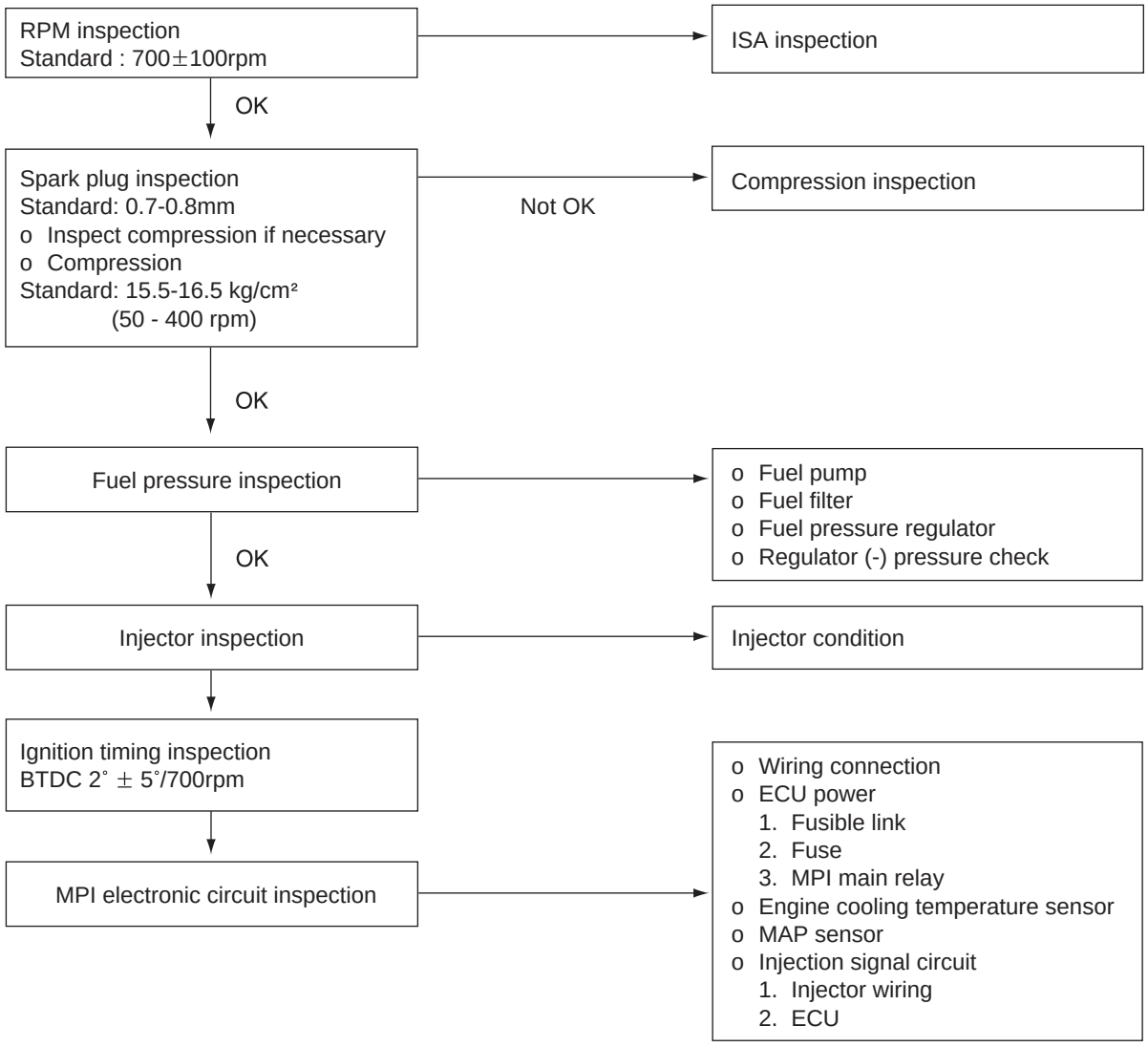

L4GC255A

- **ENGINE HESITATION OR INSUFFIENT ACCELELATION**

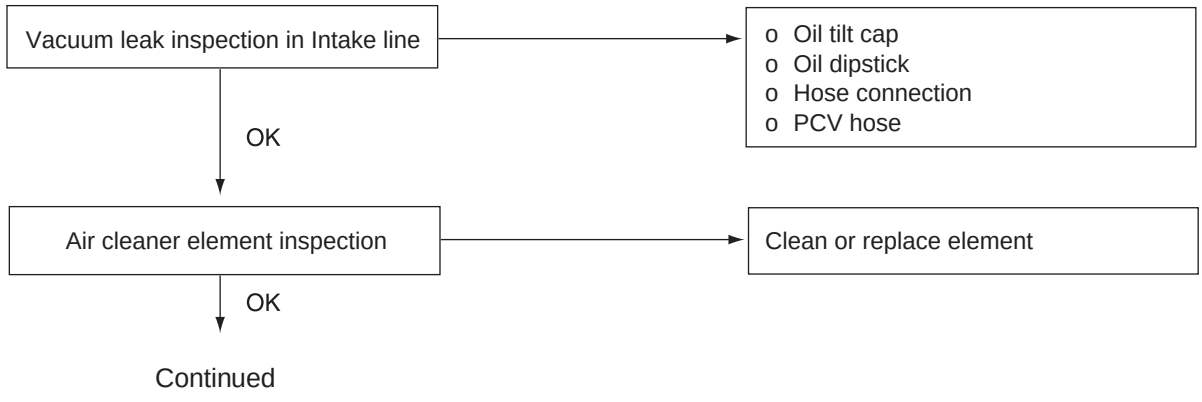

Continued

https://www.forkliftpdfmanuals.com/

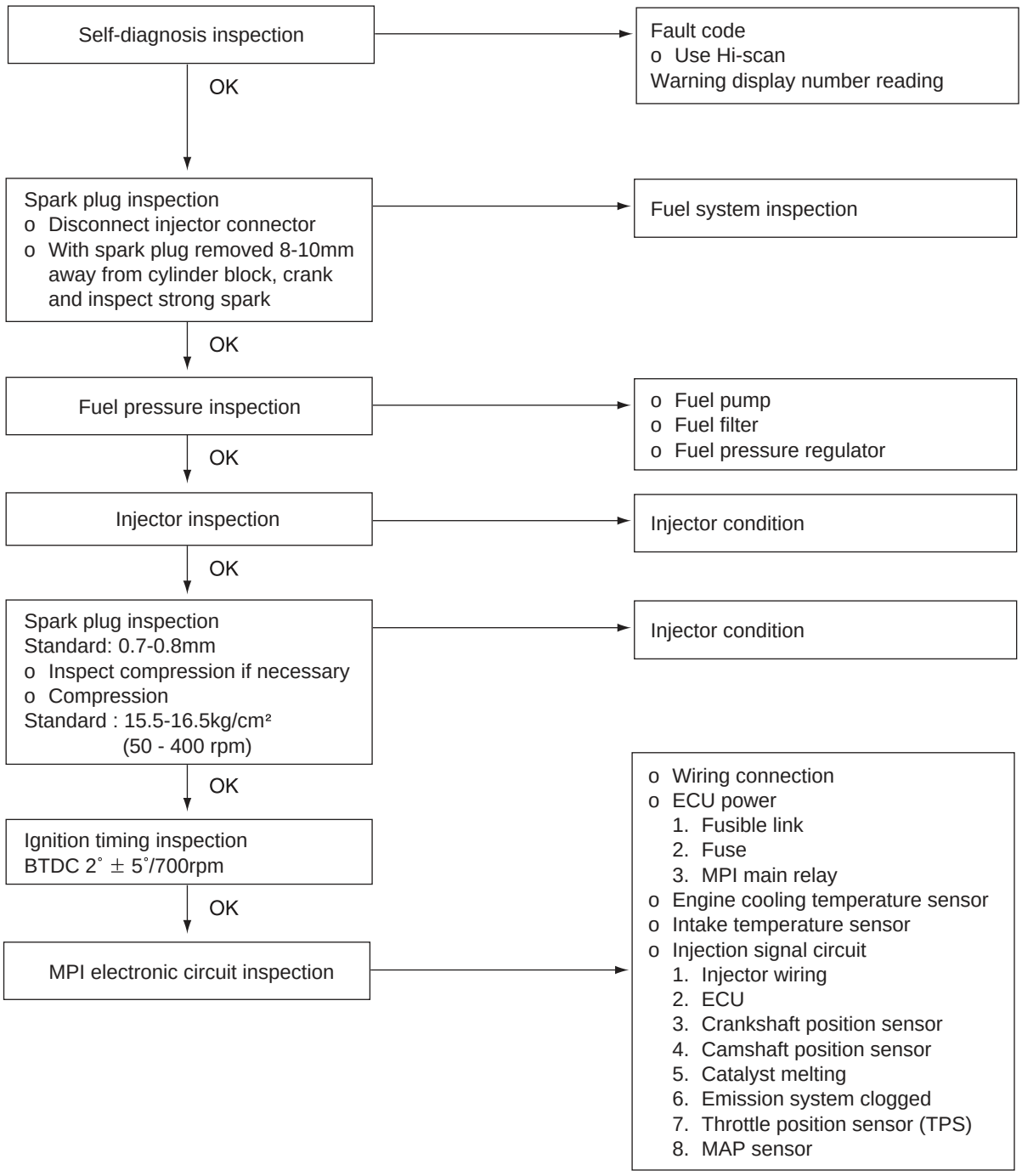

L4GC256A

https://www.forkliftpdfmanuals.com/

TROUBLESHOOTING GUIDE

- The following number represents inspection order.

Main symptom	Item / Sub symptom	Starter relay	Starter	Flywheel	Airflow sensor circuit	Fuel pressure regulator	Water temperature sensor	Compression	Piston ring	Ignition timing	Timing belt	Injector	ECU	A/C circuit	Connecting rod bearing	Fuel chamber	Crankshaft bearing
Starting	Not cranking	1	2														
	Starter is rotating but not cranking		1	2													
	Incomplete combustion				1	2	3	4	5	6	7	8	9				
	Increasingly cranking		1											2	3	4	
	Normally difficult to start					4	3	7	8	9		12	13				1
	Difficult to start when cold					4	1					7	8				2
	Difficult to start when hot					4	1					7	8				2
Faulty idling	Incorrect initial idling						1					4	5	3			
	Low RPM				2		1					3	4				
	Irregular idling				9	4		7	8	10	11	12	14				1
	Engine hesitation or deceleration				4	8	5	3		11		12	13				1
Engine stops	After starting, engine stops soon				5	2	6					7	8				1
	After depressing acceleration pedal, engine stops				1	3						5	6				
	After releasing acceleration pedal, engine stops				1								2				
	With A/C ON, engine stops												2	1			
Other	Fuel over-consumption				11		10	6	7	8		9	14	12		1	5

https://www.forkliftpdfmanuals.com/

Main symptom	Item / Sub symptom	Crankshaft position sensor	Spark plug	Fuel pump	Fuel line	Ignition circuit	Intake temperature sensor circuit	Cylinder head	Oxygen sensor circuit	Fuel leak
Starting	Not cranking									
	Starter is rotating but not cranking	3								
	Incomplete combustion									
	Increasingly cranking									
	Normally difficult to start		2	5	6	10	11			
	Difficult to start when cold			5	6		3			
	Difficult to start when hot			5	6		3			
Faulty idling	Incorrect initial idling						2			
	Low RPM									
	Irregular idling		3	5	6	13	2	15		
	Engine hesitation or deceleration		2	9	10		6		7	
Engine stops	After starting, engine stops soon			3	4					
	After depressing acceleration pedal, engine stops		2		4					
	After releasing acceleration pedal, engine stops									
	With A/C ON, engine stops									
Other	Fuel over-consumption		4			13	2	3		

Main symptom	Item / Sub symptom	Coolant leak	Cooling pan	Cooling pan switch	Radiator and radiator cap	Thermostat	Timing belt	Water pump	Spark plug	Oil pump	Cylinder head	Cylinder block	Coolant temperature gauge
Other	Engine is overheated	1	2	3	4	5	6	7	8	9	10	11	12
	Engine is supercooled		1			2							3

https://www.forkliftpdfmanuals.com/

SENSOR CHARACTERISTICS

- **OXYGEN SENSOR**

Item	Detail
Criterion	• When oxygen sensor voltage is 1.4V or more • With air fuel ratio in closed loop control - When oxygen sensor voltage is 0.048 or less for 27 seconds - Except idling (more than certain rpm and negative pressure), when cooling temperature is 15°C and in case of 0.348V < oxygen sensor voltage < 0.498V for 27 seconds
Faulty sensor management	1. Mixture adaptation control forbidden • Fix it as final value 2. Air fuel ratio in closed loop control [NOTE] By minimum to maximum value difference of oxygen sensor, injection fuel quantity can be different up to 35%
Troubleshooting	Oxygen sensor/ Related circuit 1. Display oxygen sensor related circuit fault 2. Inspect bad connection of connector, faulty wiring 3. Check oxygen sensor for ground - Measure voltage between sensor body and engine ground : If measured value is 20mv or less, inspect oxygen sensor parts. If measured value is 20mv or more, clean sensor mounting part. 4. At sensor output function, inspect oxygen sensor
Check lamp	If fault code is detected, turned "ON"
HI-SCAN	• Possible to check fault • Possible to check oxygen sensor voltage

https://www.forkliftpdfmanuals.com/

- **CRANKSHAFT POSITION SENSOR (CPS)**

Item	Detail
Criterion	• During 4 camshaft signals, if there is no CKP pulse signal, determine it as fault and after this, increase counter per crankshaft signal. (Determine it together with camshaft position sensor every time)
Faulty sensor management	• When fault is detected, there is no corresponding method (Impossible to start engine) [NOTE] After 4 CKP signals, operate main relay and if signal is stopped after 1.8-3.7 seconds, shut off main relay power. (To determine CKP code in comparison with camshaft position sensor value) 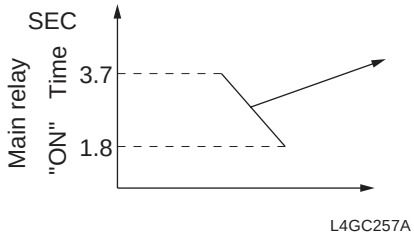 L4GC257A During this time, supply power to camshaft position sensor. I.e. to determine if crankshaft position sensor is faulty or not, start motor should be rotating for about 3.7 seconds with IG ON [CAUTION] If camshaft position sensor is faulty, it is impossible to determine CKP fault
Troubleshooting	Oxygen sensor/ Related circuit 1. Display crank angular sensor related circuit fault 2. Inspect sensor to ECU wiring or sensor to connector for fault 3. Check sensor surface for foreign material 4. Inspect sensor output. - At idle: 600-1000Hz - During cranking, measure between sensor no.1 and no.2 terminals : (1.8V-2.5V)
Check lamp	No illumination
HI-SCAN	• Possible to check oxygen sensor voltage

https://www.forkliftpdfmanuals.com/

- **CAMSHAFT POSITION SENSOR (NO.1 TDC SENSOR), VEHICLE SPEED SENSOR**

Item	Detail	Vehicle speed sensor
Criterion	• During 4 camshaft signals, there is no signal changed at camshaft position sensor	• When 400rpm or more, (-) pressure of 574mb or more, and negative pressure limit is less than 121mb, there is no sensor signal over 3 seconds
Faulty sensor management	• Injection successive injection control	• Determine all as ON DRIVING [NOTE] Vehicle signal is used for ignition tim ing control. Assume proper gear by calculating rpm, vehicle speed, and gear ratio backward. Control ignition timing to prevent impact when repressing throttle again after releasing.
Troubleshooting	No.1 cylinder TDC sensor/related circuit 1. Display fault of cylinder TDC detecting sensor (CMP sensor) and related circuit 2. Check connector for bad connection and wiring for fault 3. Inspect sensor contact surface for cleanness 4. Inspect sensor output - At idle: 5-9Hz(0-5V) - 3000rpm : 20-30Hz(0-5V)	Vehicle speed sensor/Related circuit 1. Display fault of vehicle speed sensor related circuit 2. Inspect bad connection of connector, faulty wiring 3. Inspect speedometer cable 4. Inspect vehicle speed sensor - With vehicle stopped : 0Hz While driving at about 300km/h : 20-30Hz
Check lamp	OFF at all times	OFF at all times
HI-SCAN	• Possible to check fault	• Possible to check fault

https://www.forkliftpdfmanuals.com/

INJECTOR

INSPECTION

FUNCTION AND OPERATING PRINCIPLE

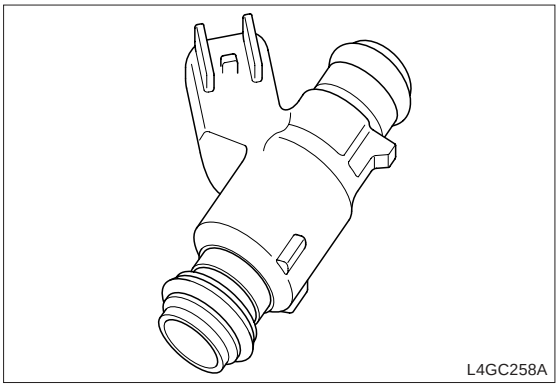
L4GC258A

Injector as a electronic controlled fuel injection unit, is solenoid valve which supplies exactly calculated fuel as a spray to engine to best combustion under the condition of various engine load and speed.
For fuel consumption reduction, engine performance enhancement and emission reduction, ECM controls fuel injection to satisfy air fuel ratio required by system by reflecting induced airflow and air fuel ratio among emission and adjusting injector operating time. To enhance these control characteristics, quick response of injector is required, and spray feature of injector is important for perfect combustion.

Item	Specified value
Coil resistance (Ω)	13.8 ~ 15.2 (20℃)

https://www.forkliftpdfmanuals.com/

CIRCUIT DIAGRAM

[CIRCUIT DIAGRAM]

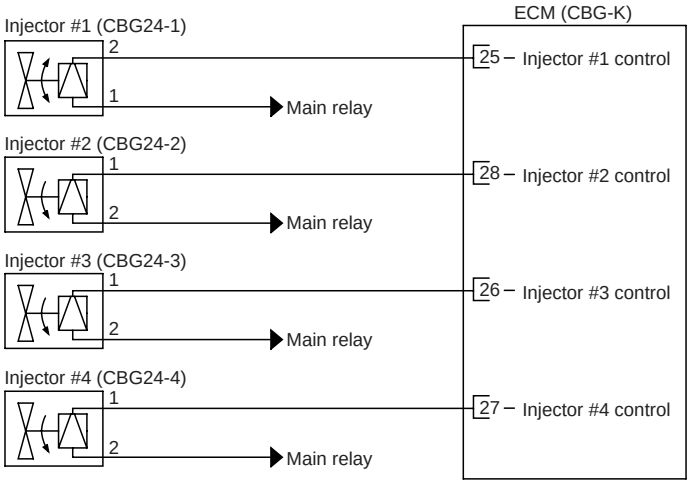

[CONNECTING INFORMATION]

INJECTOR #1 (CBG24-1)

Terminal	Connecting area	Function
1	Main relay	Power (B+)
2	ECM CBG-K (25)	Injector #1 control

INJECTOR #2 (CBG24-2)

Terminal	Connecting area	Function
1	ECM CBG-K (28)	Injector #2 control
2	Main relay	Power (B+)

INJECTOR #3 (CBG24-3)

Terminal	Connecting area	Function
1	ECM CBG-K (26)	Injector #3 control
2	Main relay	Power (B+)

INJECTOR #4 (CBG24-4)

Terminal	Connecting area	Function
1	ECM CBG-K (27)	Injector #4 control
2	Main relay	Power (B+)

[HARNESS CONNECTOR]

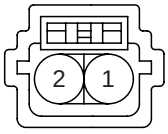

CBG24-1,2,3,4
Injector #1,2,3,4

L4GC259A

PARTS INSPECTION

1. Turn the ignition switch OFF.
2. Disconnect the injector connector.
3. Measure resistance between injector terminal #1 and #2.
4. Check that the measured resistance is different from specification (Refer to SPECIFICATIONS)

Specified value	See "SPECIFICATIONS"

https://www.forkliftpdfmanuals.com/

PCV VALVE

OUTLINE AND OPERATING PRINCIPLE

Intake Manifold Side (No Vacuum)

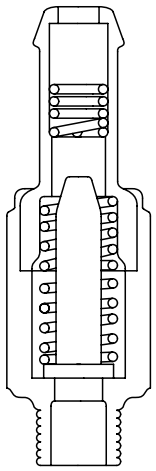

Locker Cover Side

L4GC260A

Engine condition	No operating
PCV valve	No operating
Vacuum path	Clogged

Intake Manifold Side (High Vacuum)

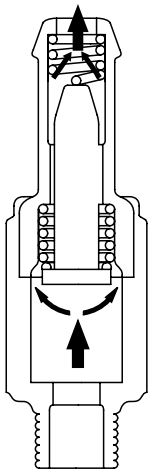

Locker Cover Side

L4GC261A

Engine condition	At idle or deceleration
PCV valve	Full operating
Vacuum path	Small

Intake Manifold Side (Sufficient Vacuum)

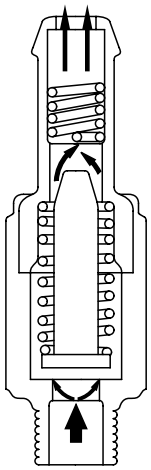

Locker Cover Side

L4GC262A

Engine condition	Proper operating
PCV valve	Proper operating
Vacuum path	Big

Intake Manifold Side (Low Vacuum)

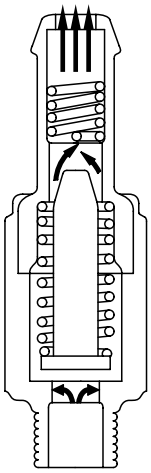

Locker Cover Side

L4GC263A

Engine condition	High speed and overload
PCV valve	Light operating
Vacuum path	Very big

https://www.forkliftpdfmanuals.com/

SERVIE PROCEDURE

REMOVAL

1. After disconnecting the vacuum hose(A), remove the PCV valve(B).

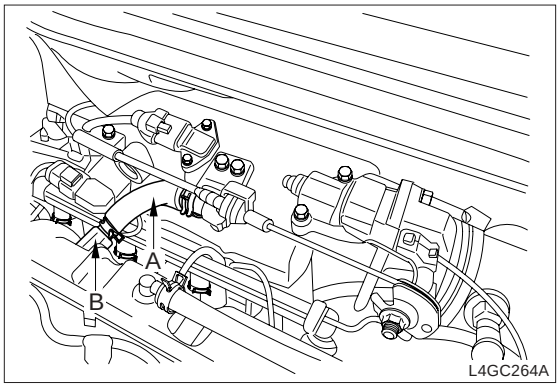

INSTALLATION

Install the PCV valve and connect the vacuum hose.

Tightening torque	0.8 ~ 1.2kgf·m

INSPECTION

1. Remove the PCV valve.
2. Check the plunger for movement by inserting a thin stick (A) toward the valve (B) nut.
3. If the plunger is not moved, it means that PCV valve is clogging, so, clean or replace PCV valve.

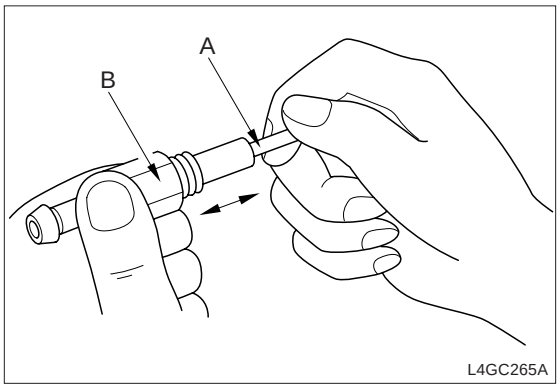

TROUBLESHOOTING

1. Disconnect the vacuum hose from the PCV valve. Disconnect the PCV valve from the locker cover and reconnect the vacuum hose.
2. With the engine at idle, Check the intake manifold for vacuum when clogging the opened end of PCV valve.

   NOTE

   The plunger in PCV valve will move back and forth.
3. If vacuum is not detected, clean or replace PCV valve and vacuum hose.

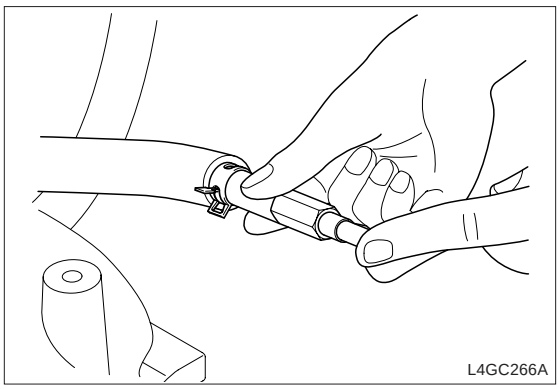

https://www.forkliftpdfmanuals.com/