CESAB

REPAIR MANUAL

B 200

210 - 213 - 215

Code 036-0436-00 03/2012

Document changes history:

Edition	Changes
036-0436-00	New version

This manual covers the following truck models:

Model	Starting serial number	Ending serial number
B 210	CE365070	
B 213	CE365283	
B 215	CE364785	

INDEX

GENERAL	0
BATTERY	1
CONTROLLERS	2
DISPLAY	3
TROUBLESHOOTING	4
MOTOR	5
DRIVE UNIT & REAR AXLE	6
STEERING SYSTEM	7
BRAKE	8
BODY & FRAME	9
MATERIAL HANDLING SYSTEM	10
MAST	11
CYLINDER	12
OIL PUMP	13
OIL CONTROL VALVE	14
MAIN OPTIONS	15
PROGRAMMER	16
APPENDIX	17

GENERAL

Page

VEHICLE EXTERIOR VIEW 0-2
VEHICLE MODELS 0-3
CHASSIS NUMBER 0-3
TRUCK CAPACITY AND IDENTIFICATION PLATES 0-4
HOW TO USE THIS MANUAL 0-8
EXPLANATION METHOD 0-8
TERMINOLOGY 0-9
ABBREVIATIONS 0-9
ILLUSTRATIONS 0-9
SI UNITS 0-10
OPERATING TIPS 0-11
GENERAL INSTRUCTIONS 0-11
BATTERY RECYCLING/DISCARDING 0-12
JACK-UP POINT 0-13
MEMBER WEIGHTS 0-14
TOWING THE TRUCK 0-15
ELECTRICAL PARTS INSPECTION 0-16
TIGHTENING TORQUE TABLE 0-17
LUBRICANTS CAPACITY AND TYPE TABLE 0-18
PERIODIC MAINTENANCE 0-19
PERIODIC REPLACEMENT TABLE 0-19
PERIODIC MAINTENANCE TABLE 0-20
LUBRICATION CHART 0-26

VEHICLE EXTERIOR VIEW

VEHICLE MODELS

Load capacity	Control method	Supply voltage (V)
1.0 ton	AC microcomputer controller	24
1.3 ton	↑	↑
1.5 ton	↑	↑

CHASSIS NUMBER

Vehicle type	Serial number format	Serial number position
100	CE000000	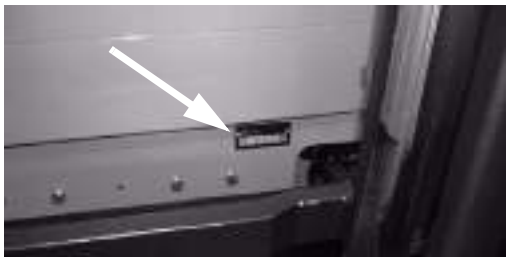
130	CE000000	
150	CE000000	

TRUCK CAPACITY AND IDENTIFICATION PLATES

A) IDENTIFICATION PLATE
B) LOAD CAPACITY PLATE

The position of the plates, like shown in the image, refers to standard truck: this position could vary in case of special trucks

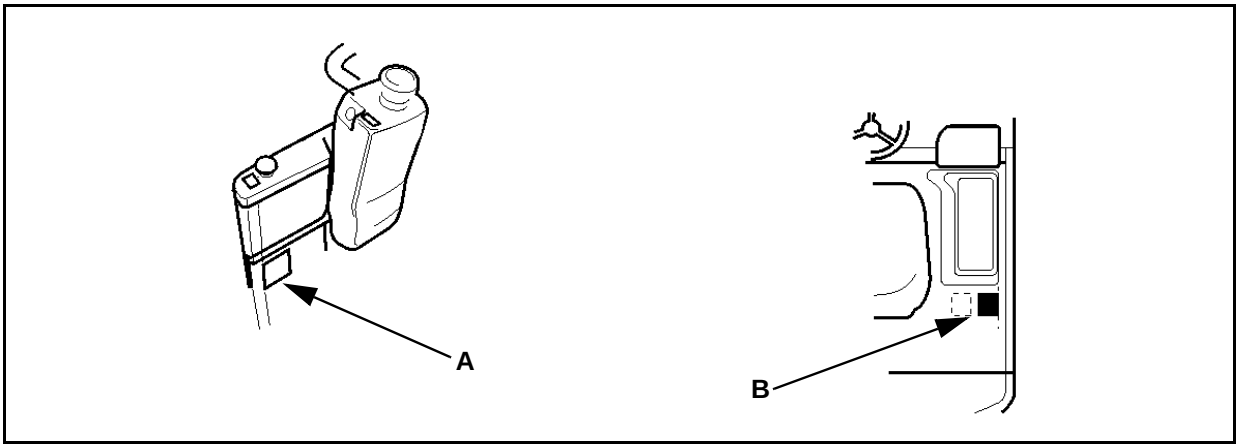

How to Read the Plates

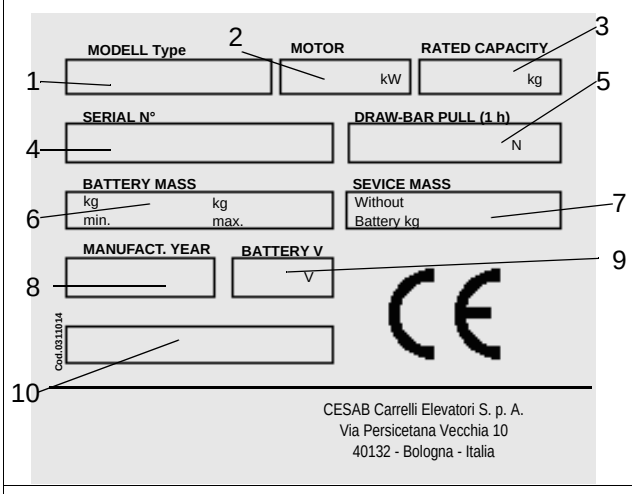

A: Identification plate
It identifies the lift truck technical data

1. Vehicle model
2. Motor power
3. Nominal rated capacity
4. Truck serial number
5. Draw-bar pull
6. Battery weight (min/max)
7. Truck weight (without battery)
8. Year of manufacture
9. Battery voltage
10. Notes

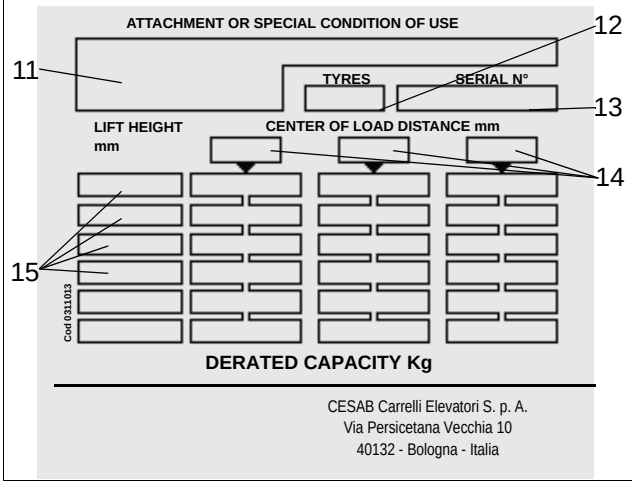

B: Load capacity plate
It identifies the load capacity with a load center of 600 mm (except for different indications)

11. Special model, Attachment model
12. Truck tyres
13. Attachment serial number
14. Load center
15. Lift height Rated capacity

TECHNICAL AND WORKING SPECIFICATIONS			FORKLIFT MODEL (Standard Version)					
CHARACTERISTICS								
1.1	Manufacturer		CESAB		CESAB		CESAB	
1.2	Model		**X243 1000**		**X243 1250**		**X243 1500**	
1.3	Power: electric (battery), diesel, petrol, LPG		Electric		Electric		Electric	
1.4	Operation: manual, pedestrian, stand-on, driver seated		driver seated		driver seated		driver seated	
1.5	Load capacity	Q [Kg]	1000		1250		1500	
1.6	Load centre	c [mm]	500		500		500	
1.8	Axle centre to fork face	x [mm]	330	a	330	a	330	a
1.9	Wheel-base	y [mm]	984		1146		1200	
WEIGHTS								
2.1	Weight	kg	2550		2820		2930	
2.2	Axle load with load, front/rear	kg	2950 / 600		3390 / 680		3820 / 610	
2.3	Axle load without load, front/rear	kg	1100 / 1450		1230 / 1590		1280 / 1650	
WHEELS - CHASSIS								
3.1	Tyres: C=Cushion, PN=Pneumatic, SE=Superelastic, G=Twin		C / SE / PN		C / SE / PN		C / SE / PN	
3.2	Tyre size, front		457x152 / 18x7-8 / 18x7-8		457x152 / 18x7-8 / 18x7-8		457x152 / 18x7-8 / 18x7-8	
3.3	Tyre size, rear		457x152 / 18x7-8 / 18x7-8		457x152 / 18x7-8 / 18x7-8		457x152 / 18x7-8 / 18x7-8	
3.5	Wheels: number front/rear (x = driven)		2 / 1x		2 / 1x		2 / 1x	
3.6	Track width, front	b10 [mm]	837 / 837 / 847	b	837 / 837 / 847	b	881 / 837 / 847	c
3.7	Track width, rear	b11 [mm]	0		0		0	
DIMENSIONS								
4.1	Mast tilt: forward / backward	α / β [°]	3° / 6°		3° / 6°		3° / 6°	
4.2	Height of mast, lowered	h1 [mm]	2140		2140		2140	
4.3	Free lift	h2 [mm]	80		80		80	
4.4	Lift height	h3 [mm]	3270		3270		3270	
4.5	Height of mast, extended	h4 [mm]	3820		3820		3820	
4.7	Height of overhead guard	h6 [mm]	1980	d	1980	d	1980	d
4.8	Height of driver's seat	h7 [mm]	941		941		941	
4.12	Towing coupling height	h10 [mm]	615		615		615	
4.19	Overall lenght	l1 [mm]	2564	a	2726	a	2780	a
4.20	Lenght to fork face	l2 [mm]	1564	a	1726	a	1780	a
4.21	Overall width	b1\b2 [mm]	990 / 990 / 1030	e	990 / 990 / 1030	e	1062 / 990 / 1030	e

4.22	Fork dimensions	s/e/l [mm]	35x100x1000		35x100x1000		35x100x1000	
4.23	Fork carriage to DIN 15173, class/form A, B		II A		II A		II A	
4.24	Width of fork carriage	b3 [mm]	900		900		900	
4.31	Floor clearance, mast (with load)	m1 [mm]	90		90		90	
4.32	Floor clearance, centre of wheel-base (with load)	m2 [mm]	90		90		90	
4.33	Aisle width with pallets 1000x1200 across forks	Ast [mm]	2893		3055		3109	
4.34	Aisle width with pallets 800x1200 along forks	Ast [mm]	3015		3177		3231	
4.35	Turning radius	Wa [mm]	1234		1396		1450	
4.36	Minimum distance between the centres of rotation	b13 [mm]	---		---		---	
PERFORMANCE								
5.1	Travel speed, with/without load	km/h	12 / 12,5		12 / 12,5		12 / 12,5	
5.2	Lifting speed, with/without load	m/s	0,32 / 0,52		0,31 / 0,52		0,30 / 0,52	
5.3	Lowering speed, with/without load	m/s	0,59 / 0,52		0,59 / 0,52		0,59 / 0,52	
5.5	Tractive force, with/without load	N	1470 / 1670		1420 / 1670		1370 / 1670	
5.6	Maximum tractive force, with/without load (S2 5 minute rating)	N	7300 / 7500	f	7250 / 7500	f	7200 / 7500	f
5.7	Climbing ability, with/without load (S2 30 minute rating)	%	8 / 12,5		7 / 11,5		6,5 / 11	
5.8	Maximum climbing ability, with/without load (S2 5 minute rating)	%	19 / 25	f	17 / 25	f	16 / 25	f
5.9	Acceleration time, with/without load	s	---		---		---	
5.10	Service brake: mechanical / hydraulic / electric / pneumatic		hydraulic		hydraulic		hydraulic	
MOTORE ELETTRICO								
6.1	Drive motor, power (S2 60 minute rating)	kW	5,1		5,1		5,1	
6.2	Lift motor, power (S3 15% rating)	kW	7,5		7,5		7,5	
6.3	Battery according to DIN 43531/35/36 A, B, C, NO		DIN 43535 A		DIN 43535 A		DIN 43535 A	
6.4	Battery voltage / rated capacity (K5)	V/Ah	24 / 400-500		24 / 700-875		24 / 800-1000	
6.5	Battery weight	kg	372		600		676	
OTHERS								
8.1	Type of drive control		Inverter MOSFET		Inverter MOSFET		Inverter MOSFET	
8.2	Working pressure for attachments	bar	140		140		140	
8.3	Oil flow for attachments	l/min	---		---		---	
8.4	Noise level at driver's ear	dB (A)	---		---		---	
8.5	Towing coupling design / type DIN		---		---		---	

a) With side shift = +34 mm b) 909 / 909 / 909 with 2M h3>4000 - 3M h3 > 4350 c) 881 / 909 / 909 with 2M h3>4000 - 3M h3 > 4350 d) + 150 mm raised version available

e) 1062 / 1062 / 1092 with 2M h3>4000 - 3M h3 > 4350 f) The shown values point out the electric motors capacity

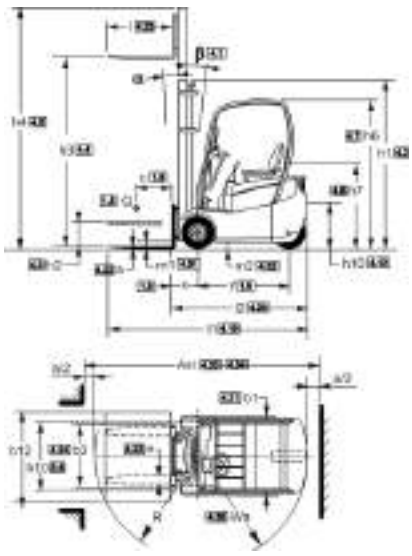

a [mm] = 200

CAPACITY DIAGRAMS (with SE tyres)

Barycentre [mm]	Capacity [Kg]
500	1000
600	890
700	810
800	730
900	670
1000	620

1.0 t

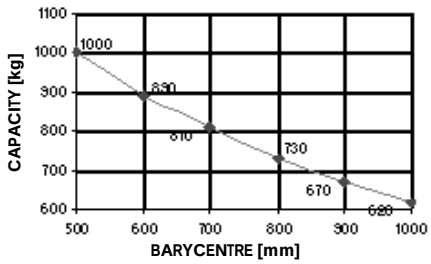

Barycentre [mm]	Capacity [Kg]
500	1250
600	1120
700	1010
800	920
900	840
1000	780

1.25 t

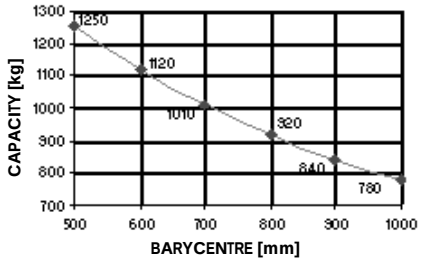

Barycentre [mm]	Capacity [Kg]
500	1500
600	1340
700	1210
800	1100
900	1010
1000	940

1.5 t

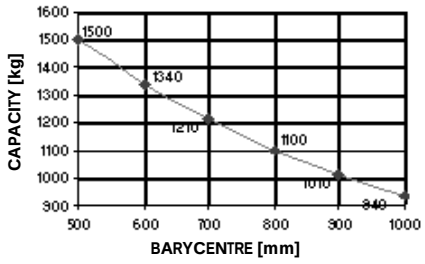

HOW TO USE THIS MANUAL

EXPLANATION METHOD

1 Operating procedure
  (1) Operating procedures are described using either pattern A or pattern B
    (a) Pattern A: Each step of the operation is explained with its own illustration
    (b) Pattern B: The entire operation is indicated by step numbers in one illustration, followed by cautions, notes, and point operations

Example of pattern B

DISASSEMBLY · INSPECTION · REASSEMBLY

Tightening torque unit T=Nm

- Some step numbers may be omitted in some illustrations.
- When a part requiring tightening torque instruction is not indicated in the illustration, the part name is described in the illustration frame.

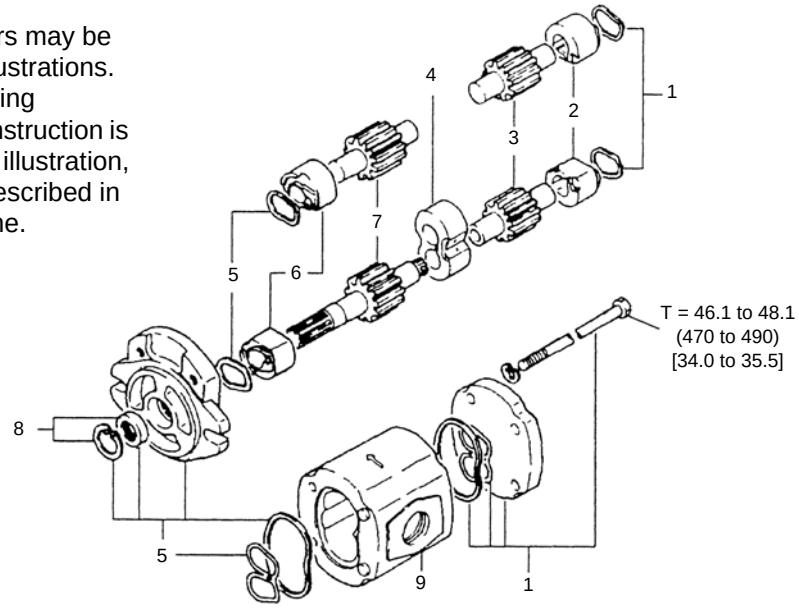

Disassembly Procedure

1 Remove the cover **[POINT 1]**
2 Remove the bushing **[POINT 2]**
3 Remove the gear

← Operation to be explained

Point Operations

Explanation of operation point with illustration ↙

[POINT 1]
Disassembly:
Make match marks before removing the pump cover

[POINT 2]
Inspection:
Measure the bushing inside diameter.
Limit 19.12 mm

Matters omitted from this manual

This manual omits descriptions of the following jobs, but perform them in actual operation:

(a) Cleaning and washing of removed parts as required
(b) Visual inspection (partially described)

TERMINOLOGY

Caution:
Important matters, whose negligence may cause accidents. Be sure to observe them.

Note:
Important items, whose negligence may cause accidents or matters during operating so it is required special attention.

Standard:
Value showing the allowable range in inspection or adjustment.

Limit:
The maximum or minimum value allowed in inspection or adjustment.

ABBREVIATIONS

Abbreviation	Meaning	Abbreviation	Meaning
--	--	RH	Right hand
ATT	Attachment	SAE	Society of Automotive Engineers (USA)
EHPS	Electronically controlled fully hydraulic power steering	SAS	System of active stability
FHPS	Fully hydraulic power steering	SST	Special service tool
LH	Left hand	STD	Standard
L/	Less	T=	Tightening torque
OPT	Option	O O T	Number of teeth (O O T)
O/S	Oversize	U/S	Undersize
PS	Power steering	W/	With

ILLUSTRATIONS

Illustrations are supposed to point out the correct methods to work on the machine and its components, therefore they could not display exactly the same elements.

SI UNITS

Meaning of SI

This manual uses SI units. SI represents the International System of Units, which was established to unify the various systems of units used in the past for smoother international technical communication.

New Units Adopted in SI

Item	New unit	Conventional unit	Conversion rate(*) (1 [conventional unit] = X [SI unit])
Force(**)	N (newton)	kgf	1 kgf = 9.80665 N
Torque(**) (Moment)	N·m	kgf·cm	1 kgf·cm = 9.80665 N·m
Pressure(**)	Bar	kgf/cm^2	1 Bar = 1 kgf / cm^2
Pressure(**)	Pa (pascal)	kgf/cm^2	1 kgf/cm^2 = 98.0665 kPa = 0.0980665 MPa
↑	↑	mmHg	1 mmHg = 0.133322 kPa
Revolving speed	rpm	rpm	1 rpm = 1 r/min
Spring constant(**)	N/mm	kgf/mm	1 kgf/mm = 9.80665 N/mm
Volume	l	cc	1 cc = 1 mℓ
Power	W	PS system	1 PS = 0.735499 kW
Heat quantity	W·h	cal	1 kcal = 1.16279 W·h
Specific fuel consumption	g/W·h	g/PS·h	1 g/PS·h = 1.3596 g/kW·h

<Reference>
(*): X represents the value in SI units as converted from 1 [in conventional units], which can be used as the rate for conversion between conventional and SI units

(**): In the past, kilogram [kg] representing mass was often used in place of weight kilogram [kgf], which should be used as the unit of force.

Conversion between Conventional and SI Units

Equation for conversion

Value in SI unit = Conversion rate × Value in conventional unit	Conversion rate: Figure corresponding to X in the conversion rate column in the table above
Value in conventional unit = Value in SI unit ÷ Conversion rate	

When converting, change the unit of the value in conventional or SI units to the one in the conversion rate column in the table above before calculation. For example, when converting 100 W to the value in conventional unit PS, first change it to 0.1 kW and divide by the conversion rate 0.735499.

OPERATING TIPS

GENERAL INSTRUCTIONS

1. Safe operation
   (1) After jacking up, always support with wooden blocks or rigid stands
   (2) When hoisting the vehicle or its heavy component, use wire rope(s) with a sufficient reserve in load capacity
   (3) Always disconnect the battery plug before the inspection or servicing of electrical parts
2. Skillful operation
   (1) Prepare the tools, necessary measuring instruments (circuit tester, megohmmeter, oil pressure gauge, etc.) and SSTs before starting operation
   (2) Check the cable color and wiring state before disconnecting any wiring
   (3) When overhauling functional parts, complicated sections or related mechanisms, arrange the parts neatly to prevent confusion
   (4) When disassembling and inspecting a specific part such as the control valve, use clean tools and operate in a clean location
   (5) Follow the specified procedures for disassembly, inspection and reassembly
   (6) Always replace gaskets, packing, O-rings, self-locking nuts and cotter pins with new ones each time they are disassembled
   (7) Use genuine Cesab parts for replacement
   (8) Use specified bolts and nuts and observe the specified tightening torque when reassembling (tighten to the medium value of the specified tightening torque range). If no tightening torque is specified, use the value given in the “standard tightening torque table”
3. Protection of functional parts (battery operated vehicles)
   Before connecting the battery plug after vehicle inspection or maintenance, thoroughly check each connector for any connection failure or imperfect connection.
   Failure or imperfect connection of connectors related to controllers, especially, may damage elements inside the controllers
4. Defect status check
   Do not start disassembly and/or replacement immediately, but first check that disassembly and/or replacement is necessary for the defect
5. Waste fluids and solid refuses disposal
   Always use a proper container when draining waste fluids from the vehicle. Careless discharge of oil, fuel, coolant, oil filter, battery, solid refuses or other harmful substance may adversely affect human health and destroy the environment. Always collect and sort well this kind of materials, and treat them properly requesting disposal by specialized companies and according to current laws

BATTERY RECYCLING/DISCARDING

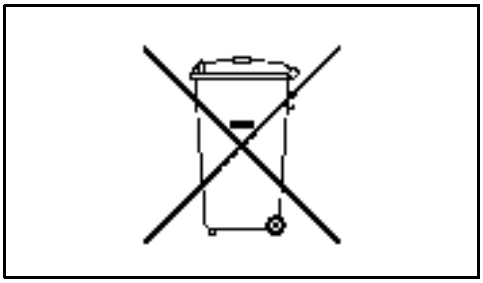

This forklift truck uses a lead accumulator and, in case of some battery-powered trucks, a lithium battery.
Materials contained in batteries (also accumulators) are hazardous to the environment and humans and therefore discarded batteries should be returned to the manufacturer for recycling.

DISCARDING THE BATTERY

When the working life of the battery ends up (change for a new battery) or the truck has to be scrapped, it is required a special attention to environmental risks when disposing/recycling batteries. Contact the manufacturer for changing or discarding batteries.

RECYCLING

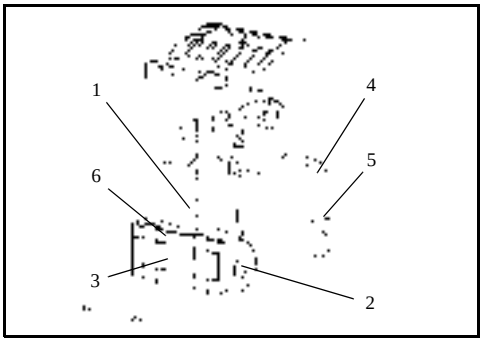

1	BODYWORK	steel, brass, bronze, ABS, plastic-reinforced fibre-glass, polymers
2	DRIVE UNIT	steel, copper, nylon, graphite, polymers
3	BRAKING UNIT	steel, polymers, nylon
4	ELECTRIC UNIT	steel, copper, silicon, brass, aluminium, lead, zinc, graphite, nylon, polymers
5	STEERING UNIT	steel, bronze, polymers
6	HYDRAULIC UNIT	steel, copper, bronze, brass, aluminium, graphite, polymers
	VARIOUS COMPONENTS	steel, copper, brass, aluminium, cast-iron, ABS, nylon, polymers
	DISPOSAL OF MINERAL OILS, GREASE AND BATTERY	In compliance with local directives. Please dispose of in an environmentally friendly way!

JACK-UP POINT

Always observe the following instructions when jacking up the vehicle:

- **When the fork is loaded, unload it and park the vehicle on a flat surface. Be sure to avoid an inclined or rough surface.**
- **Use a jack with ample capacity and jack up the vehicle at the specified jack-up point. Jacking up at any other point is dangerous.**
- **Always support the load of jacked-up vehicle with wooden blocks at specified points. Supporting the vehicle with the jack only is very dangerous.**
- **Never, under any circumstances, put any part of the body (including hands and feet) under the jacked-up vehicle.**

MEMBER WEIGHTS

Member	Vehicle model	Weight (Kg)
Battery	100	372 ÷ 420
	125	600 ÷ 690
	150	676 ÷ 780
Drive motor	100 - 150	~ 34
Pump motor (Hydraulic pump + electric motor)	100 - 150	~ 40
Rear axle (without wheels and dry)	100 - 150	~ 53
Counterweight	100 - 150	~ 900
Mast with lift brackets (with lift cylinder, without forks, lifting height 4350 mm, 2M T.V.)	100 - 150	~ 450
Vehicle weight (w/battery)	100	~ 2550
	125	~ 2820
	150	~ 2930

TOWING THE TRUCK

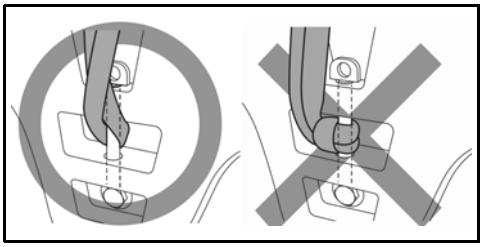

The standard fork lift trucks are not suited for towing.

In special case, the rear draw bar can be used to tow a faulty lift truck.
In this case it is obligatory to use a stiff towing bar, fastened between the rear draw bar of the truck and the towing vehicle. You must proceed carefully and slowly, if possible on a level surface.

- while towing, do not carry any other loads on the forks;
- as far as possible, avoid driving on gradients. In any case, do not go over the figure for driving on gradients with a load.

Note the cautions below when towing the vehicle with back wheels lifted.

- Lift the rear wheels for towing
- The traveling speed when towing must not exceed the maximum traveling speed of the forklift
- Before starting towing, always set the key switch to OFF, the direction switch to the neutral position and parking brake of released
- Before towing, either remove the fork or take action to prevent the fork from coming into contact with the ground due to bouncing

When making a curve, towed loads tend to reduce the curving radius; therefore it is important to widen the entrance radius in order to avoid striking against any obstacle.

ELECTRICAL PARTS INSPECTION

1. Always disconnect the battery plug before inspecting or servicing electrical parts.
2. Pay sufficient attention when handling electronic parts.

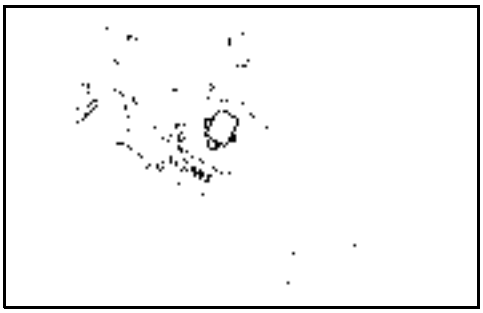

(1) Never subject electronic parts, such as computers and relays, to impact
(2) Never expose electronic parts to high temperature or moisture
(3) Do not touch connector terminals, as they may be deformed or damaged due to static electricity

3. Use a circuit multimeter that matches the object and purpose of measurement.
   Analog type: This type is convenient for observing movement during operation and the operating condition. Measured value is only a reference
   Digital type: A fairly accurate reading is possible. However, it is difficult to observe operation or movement.

(1) Difference between results of measurement with analog and digital types
∗ The results of measurements using the analog type and the digital type may be different. Differences between the polarities of the analog type and the digital type are described below.

1) Analog circuit multimeter

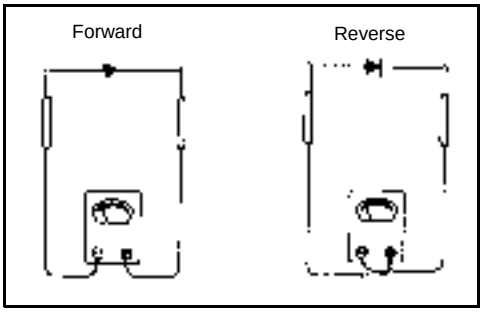

Example of measurement result
Multimeter range: 1 kΩ

	Analog type
Forward	Continuity
	11 kΩ
Reverse	No continuity
	∞

2) Digital circuit multimeter

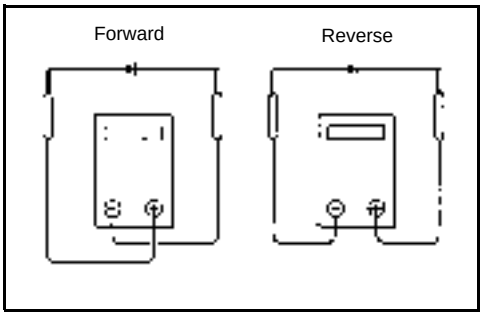

Example of measurement result
Multimeter range: 2MΩ

	Digital type
Forward	No continuity
	1
Reverse	Continuity
	2 MΩ

TIGHTENING TORQUE TABLE

The tables here below are valid for screws and bolts without superficial covering, preventively lubricated with oil.

SCREWS WITH “ISO” METRIC COARSE THREAD

Nominal diameter mm	PRELOADING V (N)				TORQUE Max (Nm)			
	6 D	8 G	10 K	12 K	6 D	8 G	10 K	12 K
	6,6	8,8	10,9	12,9	6,6	8,8	10,9	12,9
M 4 x 0,7	21781	3865	5435	6524	1,7	3	4,2	5,1
M 5 x 0,8	3502	6229	8780	10497	3,2	5,8	8,2	9,9
M 6 x 1	4974	8849	12459	14911	5,7	10	14,3	17,1
M 7 x 1	7142	12753	17854	21386	9,2	16,6	23	27,8
M 8 x 1,25	9025	16088	22661	27174	13,6	24,3	34	41,1
M 9 x 1,25	11870	21190	29921	35610	20,1	36	50,8	60,5
M 10 x 1,5	14519	25506	35905	42968	27,8	49	69	82
M 12 x1,75	20797	37082	52189	62588	46,5	83	117	140
M 14 x 2	28351	50620	71123	85347	74	132	186	223
M 16 x 2	38750	68866	97119	116739	113	200	283	339
M 18 x 2,5	47480	84366	118701	142245	157	279	392	471
M 20 x 2,5	60430	107910	151565	181485	218	388	545	653
M 22 x 2,5	74850	133416	187371	224649	294	520	731	883
M 24 x 3	87309	155979	218763	261927	383	687	961	1148
M 27 x 3	112815	202086	283509	340407	549	991	1393	1668
M 30 x 3	138321	247212	347274	415944	755	1354	1893	2276

SCREWS WITH “ISO” METRIC FINE THREAD

Nominal diameter mm	PRELOADING V (N)				TORQUE Max (Nm)			
	6 D*	8 G*	10 K*	12 K*	6 D*	8 G*	10 K*	12 K*
	6,6*	8,8*	10,9*	12,9*	6,6*	8,8*	10,9*	12,9*
M 8 x 1	9761	17168	24231	29038	14,5	25,5	36,2	43
M 10 x1,25	15107	26879	37867	45420	28,4	51	72	85
M 12 x1,25	23740	40613	56898	68474	52	89	126	151
M 12 x1,5	21778	38848	54642	65531	49	87	123	147
M 14 x 1.5	30902	54936	77303	92705	78	140	196	235
M 16 x 1,5	41202	73575	103005	123606	118	211	294	353
M 18 x 1,5	53268	95157	133416	159903	171	304	422	510
M 20 x 1,5	67689	118701	168242	202086	239	422	598	716
M 22 x 1,5	82404	147150	206010	247212	314	564	790	952
M 24 x 2	94667	168732	237402	284490	402	721	1010	1216
M 27 x 2	122625	218763	307053	367875	589	1050	1472	1766
M 30 x 2	154017	272718	384552	461070	814	1442	2040	2453

* = screw class

LUBRICANTS CAPACITY AND TYPE TABLE

Applicable place	Capacity	Type
Drive unit	6,20 ℓ	API GL-5 MT-1 Standard vehicle: Mobilube HD or equivalent Cold storage vehicle: Mobilube 1 SHC or equivalent
Hydraulic oil	18,0 ℓ	Standard vehicle: Agip Arnica 46 or equivalent Cold storage vehicle: Agip Arnica VG32 or equivalent
Chassis and mast; Grease fitting	Proper amount	Standard vehicle: Mobilgrease Special or equivalent Cold storage vehicle: Mobiltemp SHC100 or equivalent
Mast lifting chains	Proper amount	Interflon Fin Lube TF, or Kluberoil 4UH1-32N, or Rexnord kædespray REXOIL or equivalent
Brake fluid	0,30 ℓ	Dot 4
Battery	Proper amount	Distilled water

PERIODIC MAINTENANCE

Periodic inspection and maintenance are necessary to keep your forklift truck running smoothly, and must be performed by specialized technicians: ask your Dealer Service Centre.

Maintenance intervals are based on total operating hours, or months of truck life cycle, whichever comes first (i.e. most inspections are scheduled every 1000 operating hours, or at least every six months).

Trucks operating under multi-shift work conditions must reduce intervals by:
15% for 2 daily shifts
30% for 3 daily shifts

INSPECTION METHOD:
I: Inspect, correct and replace as required
M: Measure and correct, and adjust as required
T: Tighten
C: Clean
(*) New trucks: weekly / 40h inspections are referred to new trucks only (whether under multi-shifts or not)

PERIODIC REPLACEMENT TABLE

REPLACEMENT CYCLE (Based on total operating hours or months of truck life cycle, whichever comes first)	every	1 week	12	30	60	months
	every	40	2000	5000	10000	hours
Drive unit oil		●*	●			
Hydraulic oil			●			
Hydraulic filter		●*	●			
Oil tank breather filter			●			
Brake fluid			●			
Service brake and parking brake hoses				●		
Tilt cylinder hydraulic hoses				●		
Steering system hoses				●		
Lifting chains					●	
Chain securing tie rods					●	
High pressure hydraulic hoses					●	

PERIODIC MAINTENANCE TABLE

MAINTENANCE CYCLE	every	1 week	6	12	months
(Based on total operating hours or months of truck life cycle, whichever comes first)	every	40	1000	2000	hours
DRIVE SYSTEM					
Wheels					
Tyre cuts, damage or uneven treads			I	←	
Metal chips, pebbles or other foreign matter trapped in tire tread		I*, C*	I, C	←	
Tread depth		I*	I	←	
Tyre pressure (pneumatic tyres)		M	M	←	
Hub nut tightening torque		T	T	←	
Rim side ring and disc wheel integrity		I*	I	←	
Front and rear wheel bearing abnormal noise and fastening		I*	I	←	
Front axle					
Body deformation and damage				I	
Body to frame fastening			I	←	
Abnormal noise and fastening			I	←	
Rear axle					
Body deformation and damage				I	
Body to frame fastening			I	←	
Abnormal noise and fastening			I	←	
Axle beam fastening in vehicle longitudinal direction		I*	I	←	
Hub play		I*	I	←	
Mechanical end stroke			I	←	
Steering cylinders leakage (if present)		I*	I	←	
Steering cylinders integrity and deformation (if present)			I	←	
Steering cylinders tightening torque (if present)			I	←	
Steering king pin (if present)			I	←	
Linkages play (if present)			I	←	
POWER TRANSMISSION SYSTEM					
Drive unit					
General condition, integrity, cleaning			I, C	←	
Oil leakage			I	←	
Oil level and status		I*	I	←	
Bolts and nuts fastening				I	
Wheel nuts tightening		T*	T	←	
Motor to transmission fixing bolts tightening torque			T	←	
Drive unit to frame fixing bolts tightening torque			T	←	
Oil screw plugs cleaning and tightening			T	←	
Air breezer condition and cleaning			I, C	←	

MAINTENANCE CYCLE (Based on total operating hours or months of truck life cycle, whichever comes first)	every	1 week	6	12	months
	every	40	1000	2000	hours
ELECTRICAL SYSTEM					
General					
Truck insulation			I	←	
Static strap integrity (if present)			I	←	
Motor					
Cleaning			I, C	←	
Fastening			I	←	
Rotation sound			I	←	
Insulation resistance			I	←	
Power cables tightening torque			T	←	
Battery					
Abnormality in upper portion of the battery and / or the case			I	←	
Presence of spilled liquid inside the case			I, C	←	
Plug status and cleaning			I, C	←	
Power cables status			I	←	
Terminal cleaning and fastening			I, C	←	
Insulation resistance			I	←	
Charging level			I	←	
Electrolyte level			I	←	
Electrolyte specific gravity			M	←	
Voltage measurement of each battery cell after charging				M	
Magnetic switch - Contactors					
Contacts integrity, cleaning, fastening			I	←	
Auxiliary contact operating condition, integrity, cleaning			I, C	←	
Arc shooter mounting condition (if present)			I	←	
Coil mounting locations fastening			I	←	
Main circuit lead wire mounting condition and fastening			I	←	
Connected cables tightening torque			T	←	
Function test of all equipments connected			I	←	
Microswitch - Potentiometers					
Installation integrity and fastening			I	←	
Operating condition and timings			I	←	
Accelerator and brake pedals potentiometers operating condition			I	←	
Armrest levers potentiometer operating condition (if present)			I	←	
Direction switch (if present)					
Integrity and operating condition			I	←	
Wiring connections			I	←	

MAINTENANCE CYCLE	every	1 week	6	12	months
(Based on total operating hours or months of truck life cycle, whichever comes first)	every	40	1000	2000	hours
Controller					
Integrity, cleaning and operating condition			I, C	←	
Presence of alarms in the logbook			I	←	
Connected power cables tightening torque			T	←	
Wiring connections			I	←	
Connector status			I	←	
Case cleaning (with compressed air)			C	←	
Electric fan fucntionality (if present)			I	←	
Electric fan filter and convoyer cleaning (if present)			C	←	
Fuses and Relays					
Wiring fastening			I	←	
Functionality of all functions protected by fuses and relays			I	←	
Wiring					
Harness condition, integrity, fastening			I	←	
Wire harness coating integrity			I	←	
Connections fastening and taping condition			I	←	
STEERING SYSTEM					
Steering wheel					
Play and fastening		I*	I	←	
Steering valve					
Oil leakage		I*	I	←	
Mounting fastening		I*	I	←	
Max pressure			M	←	
Steering system					
Steering angle to right and left				I	
Power steering - Hydraulic steering motor (if present)					
Oil leakage			I	←	
Power steering hose integrity				I	
BRAKING SYSTEM					
General					
Braking performance			I	←	
Brake liquid / oil level (if present)			I	←	
Liquid / oil leakages (if present)			I	←	
Brake system bleeding (if present)			I	←	
Low fluid level warning light (if present)				I	

MAINTENANCE CYCLE (Based on total operating hours or months of truck life cycle, whichever comes first)	every	1 week	6	12	months
	every	40	1000	2000	hours
Brake pedal					
Pedal stroke and play			I	←	
Return stroke			I	←	
Linkages		I*	I	←	
Parking brake					
Braking performance			I	←	
Lever pull margin and operating force (if present)			I	←	
Parking switch operating condition (if present)			I	←	
Magnetic discs play, wear and cleaning (if present)			I	←	
Brake discs					
Disc wear and damage				I	
MATERIAL HANDLING SYSTEM					
Forks					
Forks and stopper pins integrity and wear			I	←	
Alignment between left and right fork fingers			I	←	
Fork heels wear			I	←	
Welded portions cracking			I	←	
Mast and lift bracket					
Welded portions deformation, damage, cracking			I	←	
Roller rotating condition, wear, damage			I	←	
Mast support bushing wear and damage			I	←	
Mast pads adjustment, wear, damage			I	←	
Roller pin wear and damage			I	←	
Mast and lift bracket fastening			I	←	
Fork carriage side, lower and upper pads condition		I*	I	←	
Chains and chain wheels					
Chain tension deformation, damage, slackness		I*	I	←	
Chain lubrication			I	←	
Chain anchor bolt and nut abnormality			I	←	
Chain wheel wear and damage			I	←	
Chain wheel revolution			I	←	
Attachment (if present)					
Abnormalities and mounting condition			I	←	

MAINTENANCE CYCLE (Based on total operating hours or months of truck life cycle, whichever comes first)	every	1 week	6	12	months
	every	40	1000	2000	hours
HYDRAULIC SYSTEM					
Cylinders					
Oil leakage			I	←	
Rod and rod end integrity, deformation, fastening			I	←	
Tilt cylinders mounting integrity, fastening, operating condition			I	←	
Natural drop, natural forward tilt			I	←	
Mast cylinders mounting integrity and fastening			I	←	
Lifting and lowering speed			I	←	
Uneven movement			I	←	
Hydraulic pump					
Oil leakage and abnormal noise			I	←	
Hydraulic oil tank					
Oil leakage			I	←	
Oil level and contamination			I	←	
Tank and oil strainer condition			I	←	
Hydraulic filter					
Cleaning				C	
Control levers (if present)					
Operating condition			I	←	
Oil control valve					
Oil leakage			I	←	
Safety valve function			I	←	
Relief pressure measurement				M	
Hydraulic hose and piping					
Oil leakage			I	←	
Deformation and damage			I	←	
Linkage fastening			I	←	
SAFETY DEVICES, etc.					
Body					
Frame, cross member, etc. damage and cracking				I	
Bolts and nuts fastening				I	
Overhead guard					
Integrity			I	←	
Welded portions cracking			I	←	
Backrest					
Deterioration, damage, cracking			I	←	
Mounting parts fastening			I	←	

MAINTENANCE CYCLE (Based on total operating hours or months of truck life cycle, whichever comes first)	every 1 week	6	12 months
	every 40	1000	2000 hours
Seat			
Mounting integrity and fastening		I	←
Seat switch operating condition	I*	I	←
Seat belt integrity and operating condition		I	←
OPS			
Operating conditions	I*	I	←
Emergency stop button			
Operating conditions		I	←
Instrument panel			
Operating conditions		I	←
Horn			
Operating and mounting conditions		I	←
Lighting system (OPT)			
Operating and mounting conditions		I	←
Turn signals (OPT)			
Operating and mounting conditions		I	←
Reverse acoustic warning (OPT)			
Operating conditions		I	←
Rear-view mirrors (OPT)			
Integrity and cleaning		I	←
Rear reflection		I	←
Cabin (OPT)			
Roof integrity		I	←
Doors, side window, tailgate integrity and operating condition		I	←
Heated windows integrity and operating condition		I	←
Wiper integrity and operating condition		I	←
Heater integrity and operating condition		I	←
Lubrication			
General status - see Lubrication Chart section		I	←

WARNING:
Complete the information concerning all maintenance operations with those mentioned in the relevant safety and operator manuals

LUBRICATION CHART

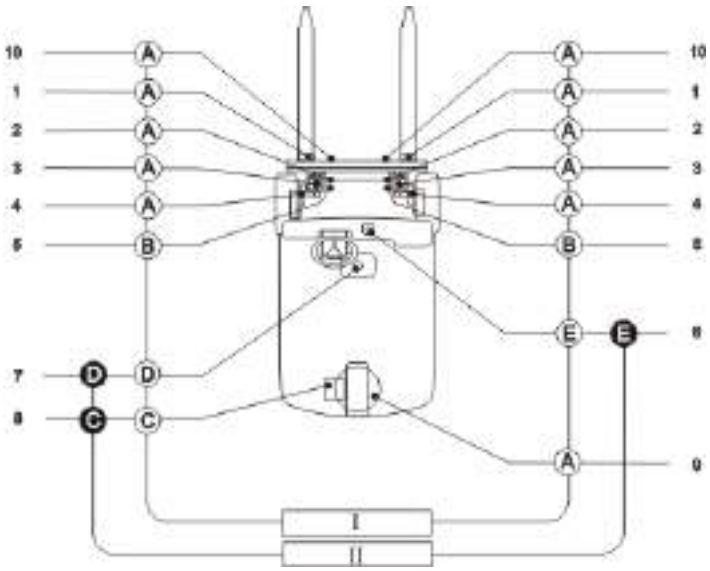

1. Fork positioning pins
2. Chain securing tie rods
3. Mast guides
4. Mast fasteners
5. Lifting chains
6. Brake fluid reservoir
7. Hydraulic oil tank
8. Transmission reduction gear
9. Steering unit
10. Side Shifter (OPT)

I Every 1000 hours (6 months)
II Every 2000 hours (12 months)

○ Inspection and supply
● Replacement

(A) Molybdenum disulfide grease
(B) Chain spray
(C) Gear oil
(D) Hydraulic oil
(E) Brake fluid

BATTERY

Page

BATTERY CASING AND REQUIRED WEIGHT 1-2
BATTERY SERVICE STANDARDS 1-3
DISPLAY 1-3
MANAGING THE BATTERY 1-4
BDI ADJ MIN 1-6
BDI ADJ MAX 1-8
ADJUSTMENT 3 1-9
ADJUSTING THE BATTERY VOLTAGE READING .. 1-12
ADJUST BATTERY 1-12
ADJUST CAPACITOR 1-13
TROUBLESHOOTING ON THE BATTERY 1-14
INSPECTION 1-15
STATE OF BATTERY CHARGE 1-17
BATTERY CAPACITY 1-18
GEL BATTERIES 1-19
ADJUSTING THE GEL BATTERY INDICATOR 1-20
BATTERY 1-21

BATTERY CASING AND REQUIRED WEIGHT

if you purchase the battery locally, it must be of at least the following weight, as shown in the table:

Vehicle model	Capacity Battery (Ah)	Size of battery casing [mm]			Minimum required (with casing) [Kg]
		X	Y	Z	
100	400	273	830	570	372
	400-500	273	830	627	372
125	630	381	830	627	524
	735	435	830	570	600
	700-875	435	830	627	600
150	735	435	830	627	600
	840	489	830	570	676
	800-1000	489	830	627	676

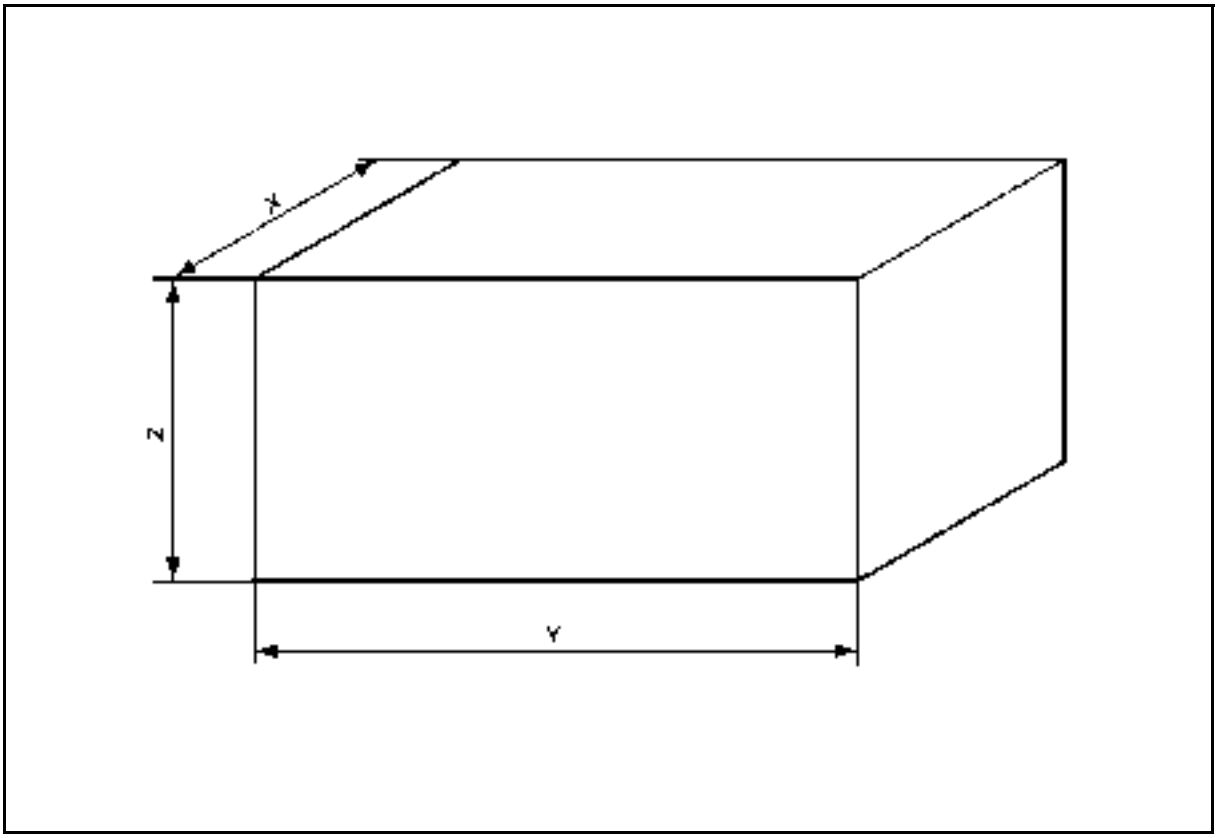

BATTERY SERVICE STANDARDS

Specific gravity (battery charged)		1.280 [20 °C]
Specific gravity (80% battery discharged)		1.150 [20 °C]
Discharge end voltage	24 V	23.6 V
Electrolyte		Refined dilute sulfuric acid
Fluid to be added		Distilled water
Insulation resistance		10MW or more

* Battery value on standby (only with key ON and no power consumption)

DISPLAY

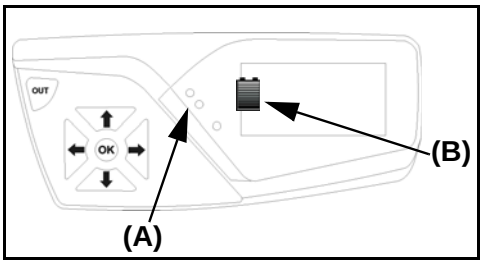

Battery Charge Indicator
(A) Diagnostic led
(B) Charge indicatorCharge

Percentage of charge	Description	Acustic notice	Notes
100-20%	Normal working	No	No performances drop
15% (2 led)	illuminated **(B)** Indicator	No	80% performance reduction in traction
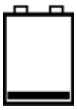 10% (1 led)	Blinking **(A)** Led, illuminated **(B)** Indicator	No	65% performance reduction in traction and 40% in lifting with mechanical distributor version, 60% reduction with electroproportional distributor version

MANAGING THE BATTERY

Battery discharge voltage and status indicator on the dashboard are managed by the Master traction logic unit.
The indicator can be customised with the following parameters.

Remarks:
The battery indicator must be adjusted according to the characteristics and type of the battery installed in the truck.
Incorrect indicator setting may lead to the non-reset of the indicator and/or the incorrect discharge of the battery, causing damage in the long term.

BDI RESET
This parameter determines the minimum recharge the battery has to receive for the partial or total reset of the indicator.
The standard is 30% of the reset curve

BDI ADJ MIN
This parameter determines the voltage below which the battery indicator signals 0% residual charge.
The standard is - 4.00% = 22.44V

BDI ADJ MAX
This parameter determines the voltage above which the battery indicator signals 100% charge.
The standard is - 3.00% = 24.60V

ADJUSTMENT 3
This parameter determines the reset curve.
The standard is + 3.00% = 0.72V

BDI GEL
This parameter sets the discharge curve for gel batteries:
The standard is OFF

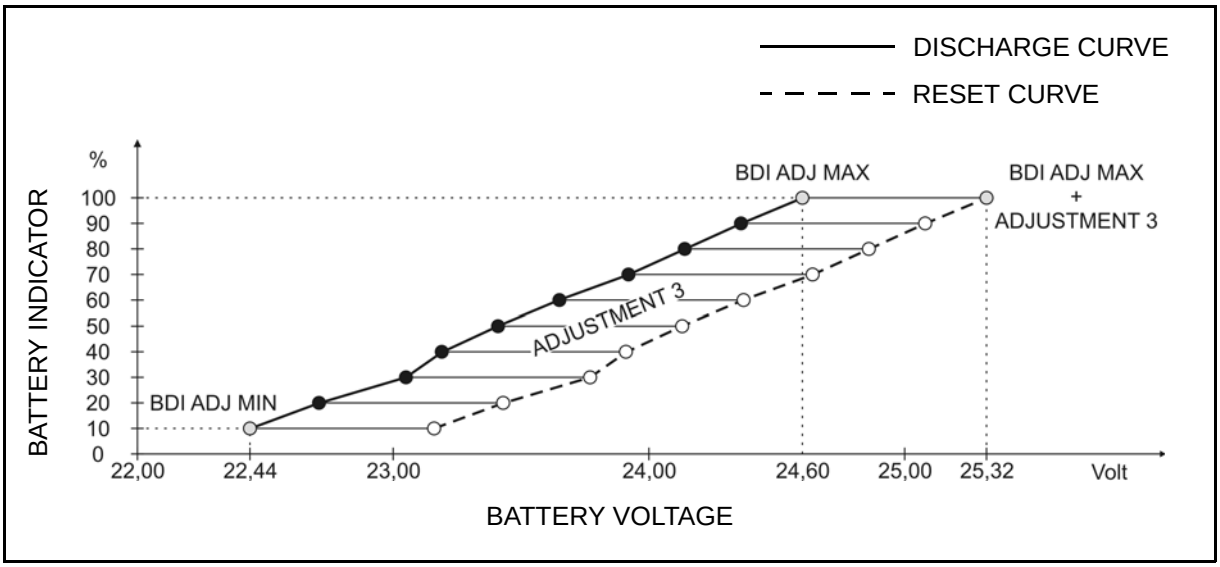

Remarks:
- The indicator resets at 100% if when the truck is switched on the battery voltage exceeds the value set by BDI ADJ MAX + ADJUSTMENT 3 (the standard is 25.32V)

BDI RESET

The BDI RESET parameter manages the indicator reset when the battery undergoes partial charges (trickle charge).
It is expressed as a percentage of the reset curve and indicates the minimum recharge the battery has to receive for the partial or total reset of the indicator.

Parameter	Min value	Max value	Step	Standard	Notes
BDI RESET	0%	100%	5%	30%	By reducing the value we reduce the quantity of partial charge needed to reset the battery indicator

EXAMPLE:
- BDI RESET set to 30%
- Battery indicator shows 40% residual charge (4 leds on; 23.19V)
- The battery undergoes partial charge, 2 possibilities:
  - (a) If the partial charge is less than 30% (Vb < 24.64V) - **NO RESET**
  - (b) If the partial charge is greater than or equal to 30% (Vb ≥ 24,64V) - **YES RESET**

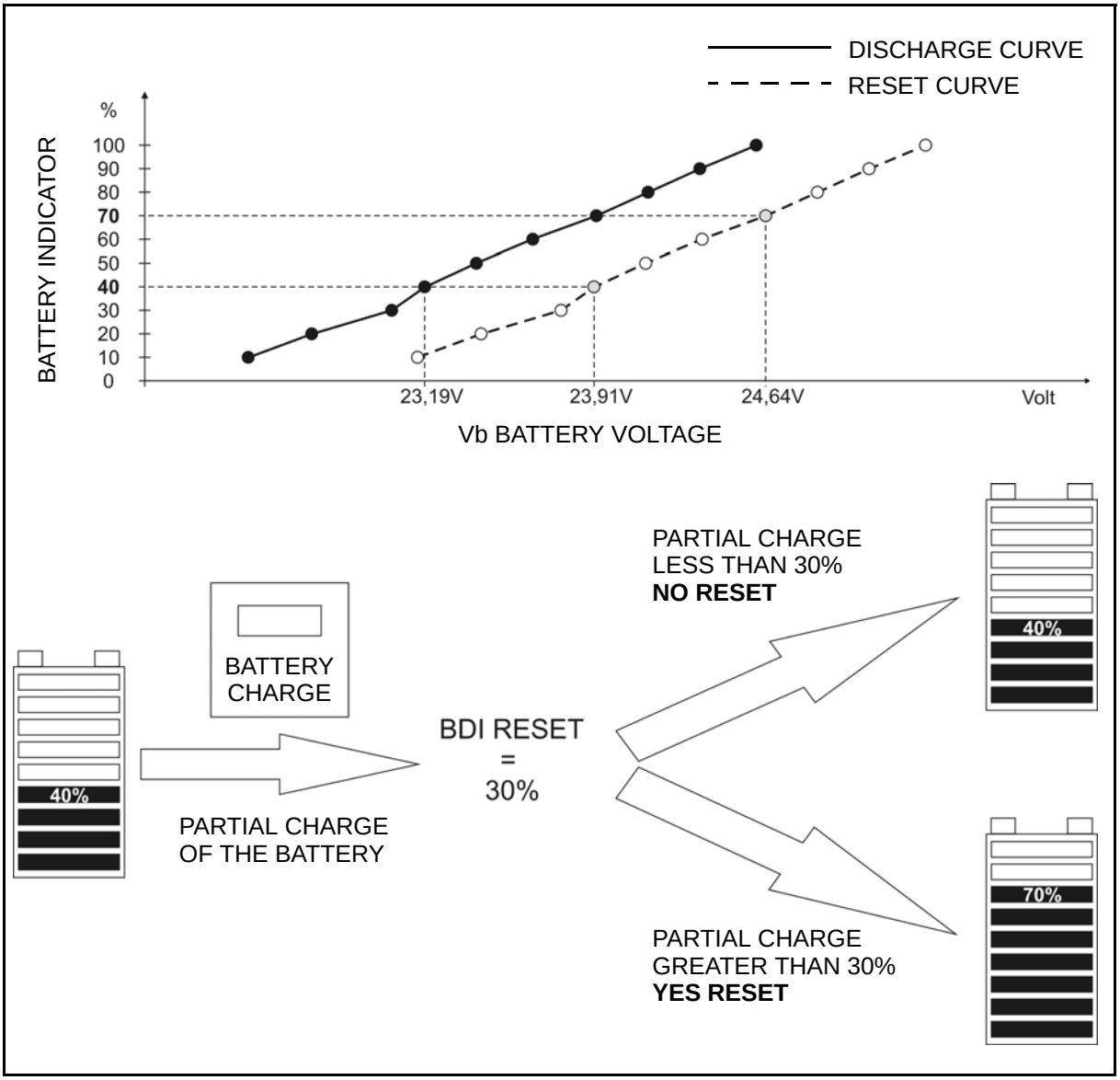

BDI ADJ MIN

The parameter BDI ADJ MIN determines the voltage below which the battery indicator signals 0% residual charge.

Remarks:

- **When the battery indicator shows a residual charge of 0%, the specific weight of the electrolyte must not be less than 1.13 kg/l;**
- **With the standard setting of the parameter BDI ADJ MIN, 0% of the indicator corresponds to 10% actual residual battery charge.**

Parameter	Min value	Max value	Step	Standard	Notes
BDI ADJ MIN	- 12,80%	+ 12,70%	0,10%	- 4,00%	0,00% = 23,400 V ± 0,10% = ± 0,024 V ± 1,00% = ± 0,240 V

BDI ADJ MIN	
%	Volt
+ 12,70 %	26,448 V
+ 12,00 %	26,28 V
+ 11,00 %	26,040 V
+ 10,00 %	25,800 V
+ 9,00 %	25,560 V
+ 8,00 %	25,320 V
+ 7,00 %	25,080 V
+ 6,00 %	24,840 V
+ 5,00 %	24,600 V
+ 4,00 %	24,360 V
+ 3,00 %	24,120 V
+ 2,00 %	23,880 V
+ 1,00%	23,640 V
0,00%	23,400 V
- 1,00%	23,160 V
- 2,00%	22,920 V
- 3,00 %	22,680 V
- 4,00 %	**22,440 V**
- 5,00 %	22,200 V
- 6,00 %	21,960 V
- 7,00 %	21,720 V
- 8,00 %	21,480 V
- 9,00 %	21,240 V
- 10,00 %	21,000 V
- 11,00 %	20,760 V
- 12,00 %	20,520 V
- 12,80 %	20,328 V

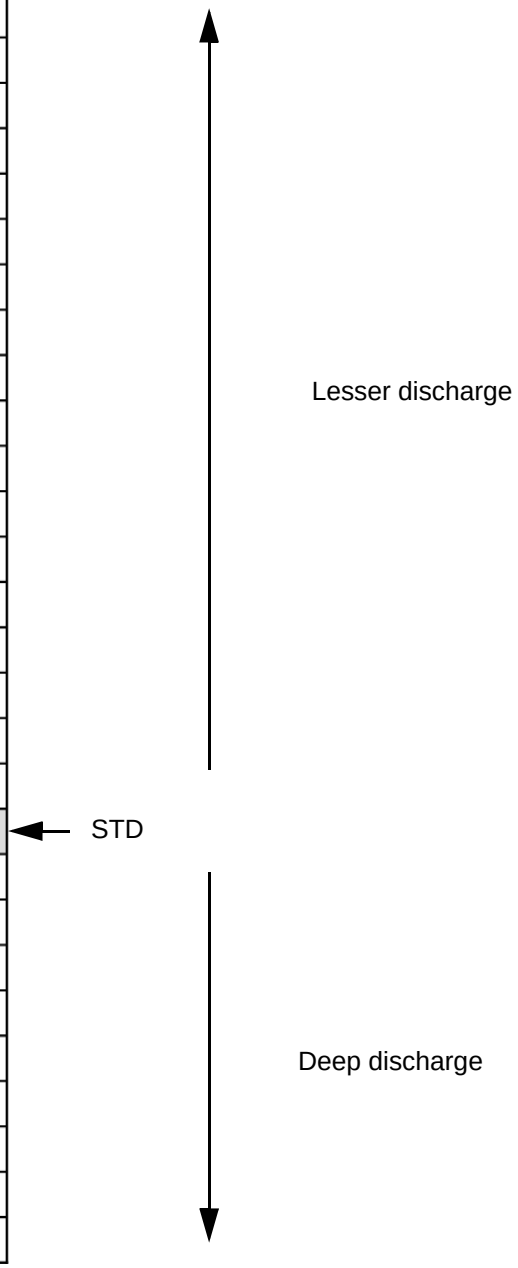

Setting BDI ADJ MIN

The indicator may be set to modify the minimum battery voltage at which the last square switches off (indicator at 0%).

At the end of discharging, the density value of the battery elements must not fall below 1.13 kg/l

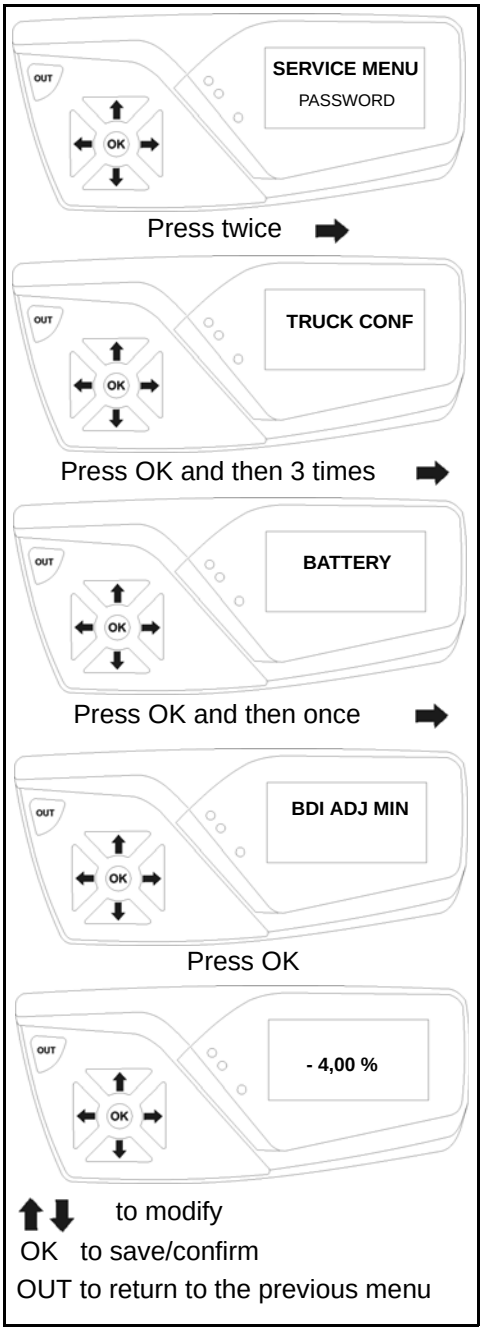

[POINT1]

Access the SERVICE menu (see chapter 3, paragraph SERVICE MENU DESCRIPTION). Modify the value in the SERVICE -> TRUCK CONF -> BATTERY -> menu, parameter **BDI ADJ MIN** to increase or decrease the maximum battery discharge.

Remarks:

Periodically check the electrolyte density in the battery elements at the end of discharge.

If the density is lower than 1.13 kg/l, increase the parameter BDI ADJ MIN by a value of +1.00% (0.24 V) for every 0.01kg/l up to the limit of 1.13 kg/l.

Remarks: The values shown in the various figures are indicative

BDI ADJ MAX

The parameter BDI ADJ MIN determines the voltage above which the battery indicator signals 100% charge.

Parameter	Min value	Max value	Step	Standard	Notes
BDI ADJ MAX	- 12,80%	+ 12,70%	0,10%	- 3,00%	0,00% = 25,320 V ± 0,10% = ± 0,024 V ± 1,00% = ± 0,240 V

BDI ADJ MAX	
%	Volt
+ 12,70 %	28,368 V
+ 12,00 %	28,200 V
+ 11,00 %	27,960 V
+ 10,00 %	27,720 V
+ 9,00 %	27,480 V
+ 8,00 %	27,240 V
+ 7,00 %	27,000 V
+ 6,00 %	26,760 V
+ 5,00 %	26,520 V
+ 4,00 %	26,280 V
+ 3,00 %	26,040 V
+ 2,00 %	25,800 V
+ 1,00%	25,560 V
0,00%	25,320 V
- 1,00%	25,080 V
- 2,00%	24,840 V
- 3,00 %	24,600 V
- 4,00 %	24,360 V
- 5,00 %	24,120 V
- 6,00 %	23,880 V
- 7,00 %	23,640 V
- 8,00 %	23,400 V
- 9,00 %	23,160 V
- 10,00 %	22,920 V
- 11,00 %	22,680 V
- 12,00 %	22,440 V
- 12,80 %	22,248 V

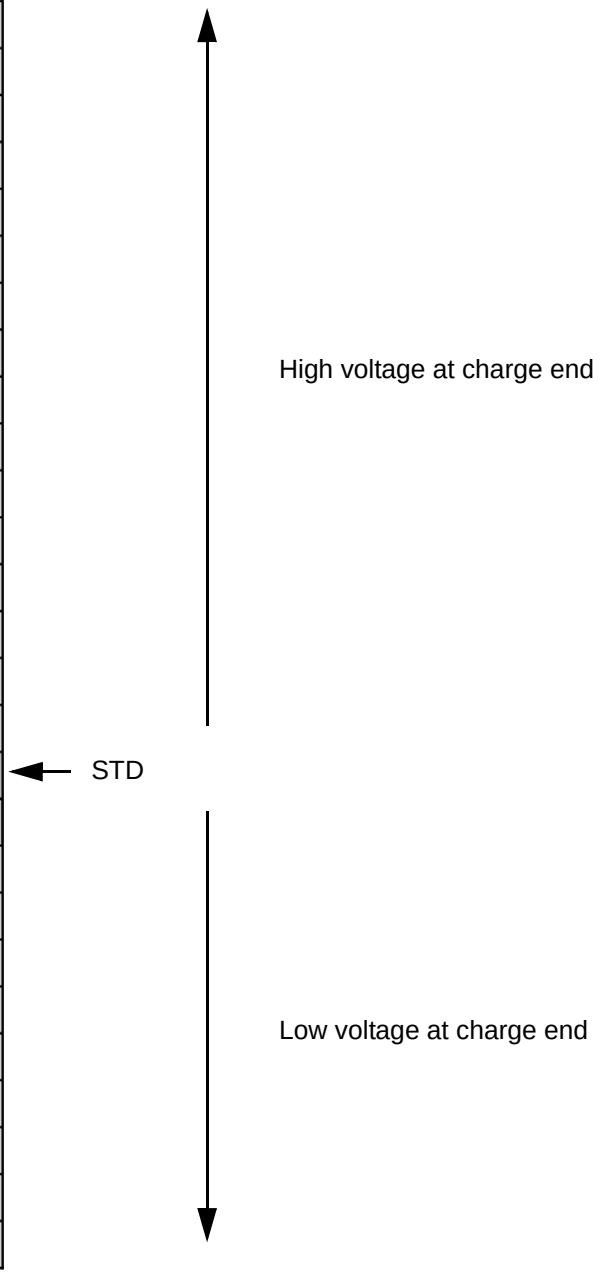

ADJUSTMENT 3

The ADJUSTMENT 3 parameter determines the reset curve.

Discharge curve + ADJUSTMENT 3 = Reset curve

Parameter	Min value	Max value	Step	Standard	Notes
ADJUSTMENT 3	0,00%	+ 12,70%	0,10%	+ 3,00%	0,00% = 0,000 V ± 0,10% = ± 0,024 V ± 1,00% = ± 0,240 V

ADJUSTMENT 3	
%	Volt
0,00%	0,000 V
+ 1,00%	0,240 V
+ 2,00%	0,480 V
+ 3,00 %	0,720 V
+ 4,00 %	0,960 V
+ 5,00 %	1,200 V
+ 6,00 %	1,440 V
+ 7,00 %	1,680 V
+ 8,00 %	1,920 V
+ 9,00 %	2,160 V
+ 10,00 %	2,400 V
+ 11,00 %	2,640 V
+ 12,00 %	2,880 V
+ 12,70 %	3,048 V

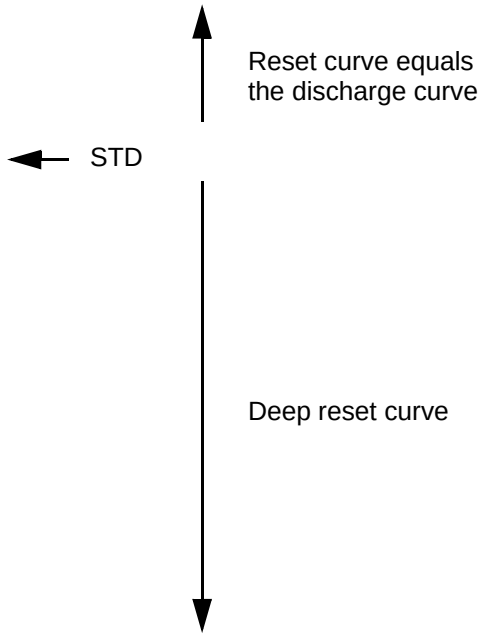

Battery indicator reset setting

If after a battery charge cycle the indicator on the display has not reset, proceed as follows.

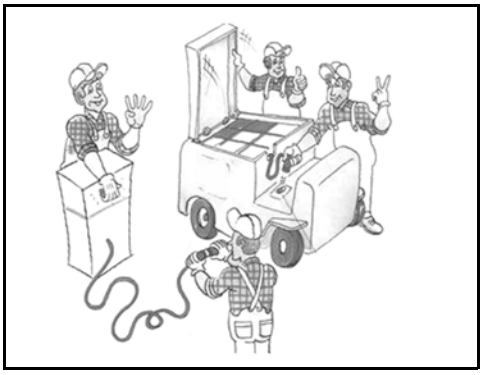

[POINT1]
At the end of complete charging.
Disconnect the battery from the battery charger and connect it to the truck.
Remarks:
Ensure that the battery completes the whole charge cycle; if the battery does not reach a density of 1,29 kg/l [20°C] on completing the charge, check the state of the battery (see chapter 1, paragraph INSPECTION) and of the battery charger.
If necessary, apply to the battery supplier.

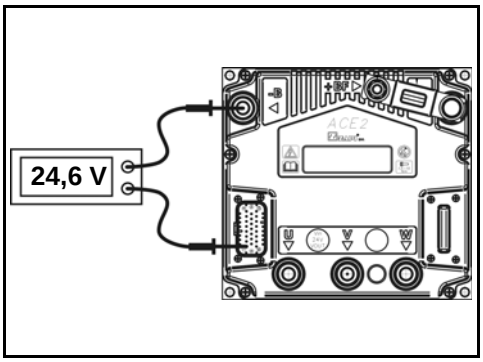

[POINT2]
Let the truck work normally for about 10 minutes.
Use a multimeter to measure the voltage between Pin 1 (red wire) of the connector JT on the traction logic unit (**+**) and the negative pole on the traction logic unit (**-**)

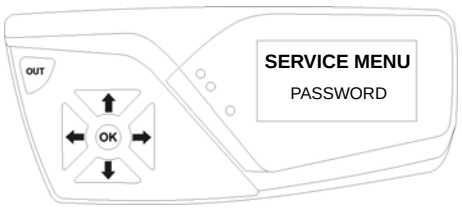

Press twice

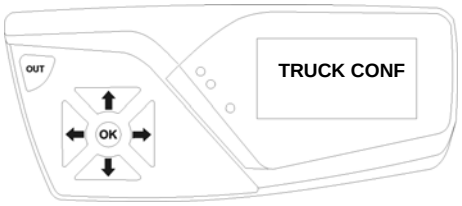

Press OK and then 3 times

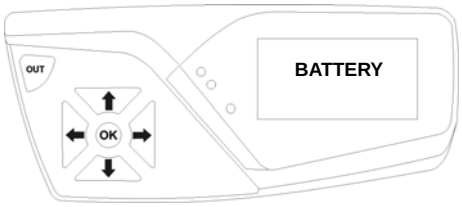

Press OK and then 2 times

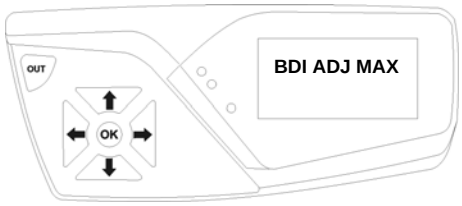

Press OK

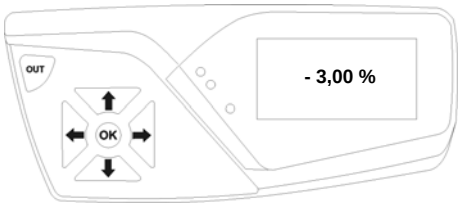

⬆⬇ to modify
OK to save/confirm
OUT to return to the previous menu

[POINT3]
Access the SERVICE menu (see chapter 3, paragraph SERVICE MENU DESCRIPTION). Set the voltage measured at **[POINT 2]** in the SERVICE -> TRUCK CONF -> BATTERY -> menu, parameter **BDI ADJ MAX**

ADJUSTING THE BATTERY VOLTAGE READING

A correct adjustment allows a precise indication of the battery discharge.
Use the ADJUST BATTERY and ADJUST CAPACITOR parameters to set the voltmeter inside the traction logic unit.

Remarks:
These parameter can be acquired with any battery discharge percentage.

ADJUST BATTERY

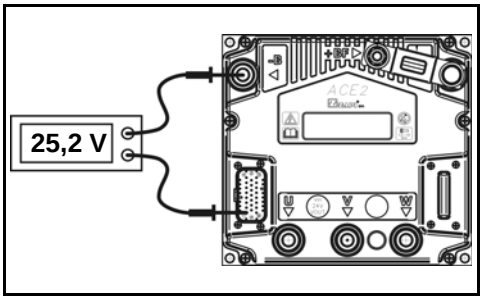

[POINT1]
Connect the battery and turn on the truck. Use a multimeter to measure the voltage between Pin 1 (red wire) of the connector JT on the traction logic unit (**+**) and the negative pole on the traction logic unit (**-**)

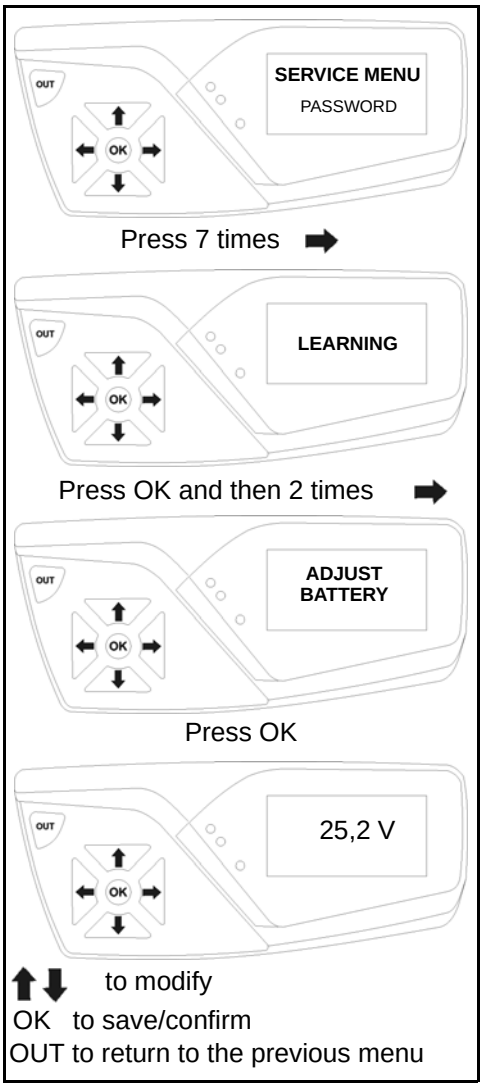

[POINT2]
Access the SERVICE menu (see chapter 3, paragraph SERVICE MENU DESCRIPTION). Set the voltage measured at **[POINT 1]** in the SERVICE -> LEARNING -> menu, parameter **ADJUST BATTERY**

Remarks: The values shown in the various figures are indicative

ADJUST CAPACITOR

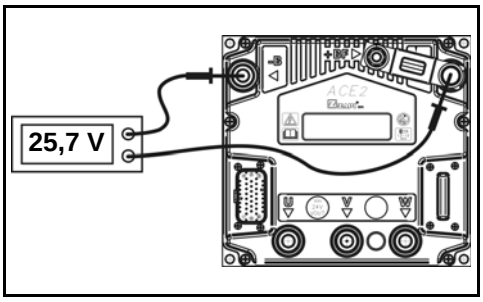

[POINT1]
Connect the battery and turn on the truck. Use a multimeter to measure the voltage present between the positive (**+**) and negative poles on the traction logic unit (**-**)

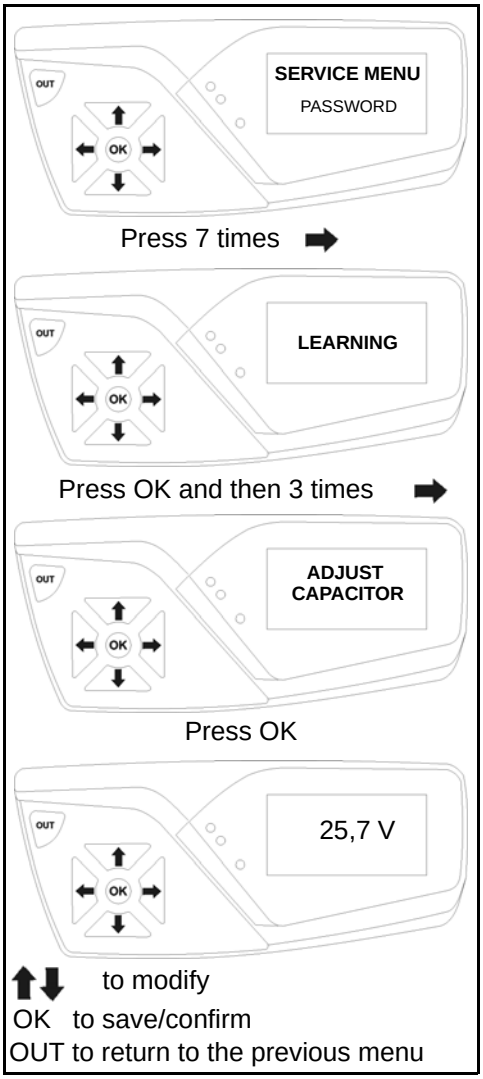

[POINT2]
Access the SERVICE menu (see chapter 3, paragraph SERVICE MENU DESCRIPTION). Set the voltage measured at **[POINT 1]** in the SERVICE -> LEARNING -> menu, parameter **ADJUST CAPACITOR**

Remarks: The values shown in the various figures are indicative

TROUBLESHOOTING ON THE BATTERY

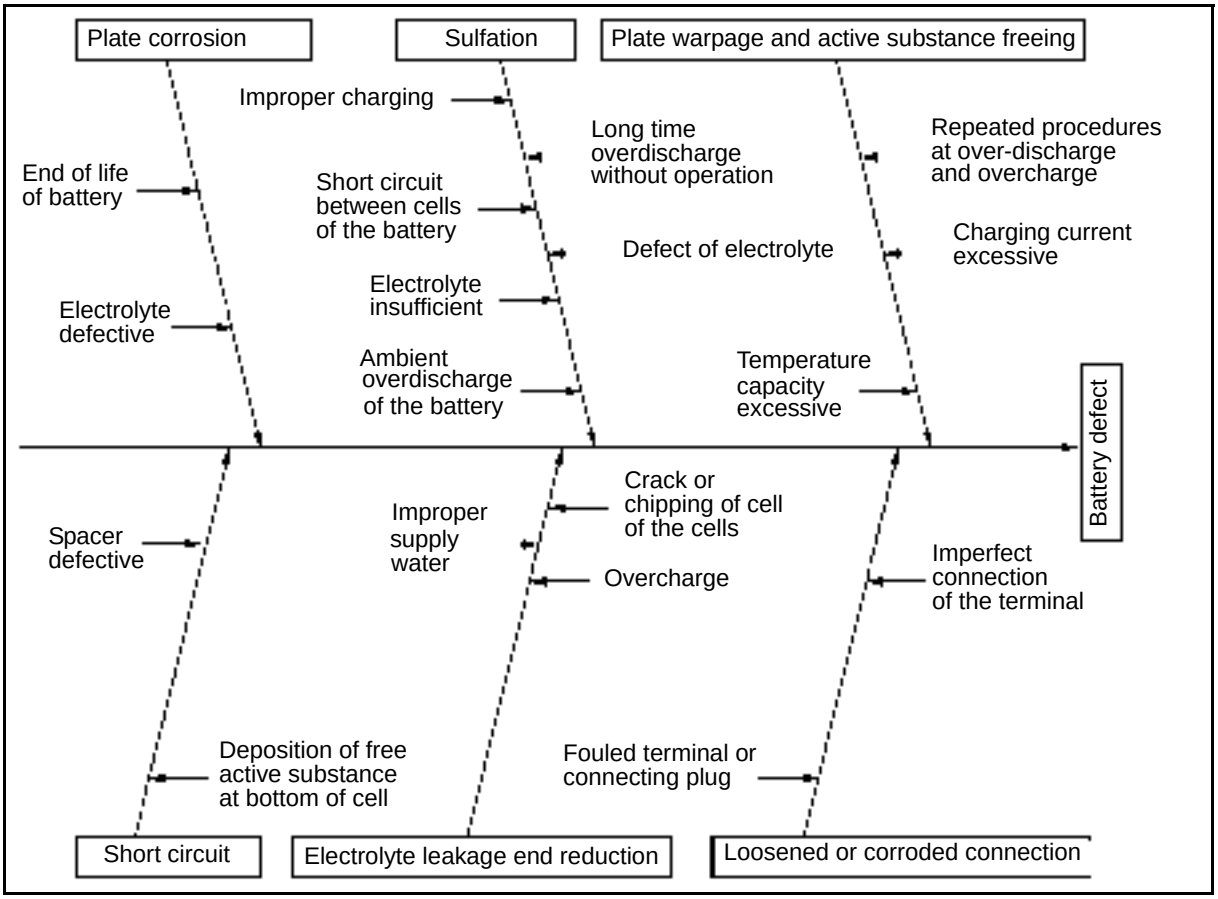

DEFECT	CAUSE	REMEDY
• Battery runs down rapidly during the work period	• Battery does not have an adequate capacity for the type of work • Battery is very old • Battery not completely charged	• Moderate current consumption or charge more frequently • If necessary, replace the battery • Check the battery charger
• Battery runs down rapidly • Low voltage, truck goes slowly during work • Electrolyte heats up	• Excessive current consumption • Truck motor overloaded, especially when going up a slope • Battery charger with high current at end of charge	• Check the load lifted by the truck • Lubricate and check the motor mechanical parts • If necessary, fit a battery with a higher capacity • Check the battery charger
• Density not the same • Contacts shorting to earth • Current leakage	• Faulty insulation of some electric device in the truck or battery • Battery has cracked cells or dirty elements • Metal case has faulty insulation • Intermediate current sockets	• Examine the insulation • Clean the case and the elements • Renew the insulating coating • Repeat the final charge • Eliminate too high and/or continuous intermediate current sockets
• Battery runs down rapidly • Truck slow, low voltage • Acid heats up • Density not the same • Density too low while charging • Charge voltage too low • High water consumption	• Plates short circuiting in some battery elements	• Replace faulty elements
• Battery runs down rapidly • Electrolyte density too low during charging	• Electrolyte density too low due to acid leakage • Frequent and excessive top-ups	• If the density does not increase with a trickle charge, the electrolyte density must be restored by adding acid.
• Battery runs down rapidly • Truck slow, poor performance • Charge voltage too high • Charge current too low	• Poles loose or oxidized	• Tighten the contacts of the poles and clean them accurately
• Acid heats up • Charge time too long • High water consumption	• Charge time set too long The timer intervenes late and prolongs the charge	• Adjust the point of intervention of the timer
• Battery runs down rapidly • Density not the same • Density too low during charging	• Charge time set too short The timer intervenes early • Insufficient time for recharging	• Adjust the point of intervention of the timer • Increase the recharging time • Replace the battery charger with a more powerful one

INSPECTION

1. Electrolyte level inspection:
   Before starting the inspection, ensure that the battery has been at rest for at least 30 minutes.
   Open the caps of each single battery element and check that the electrolyte level is high enough to cover the element plates. if it is not, top up with distilled or demineralised water to 5 - 7 mm over the top of the plates. Do not fill beyond this point, since this can cause leaks due to the fluid expanding during use or during recharging cycles, with teh risk fo corrosion of the casing, reduced electrical isolation and discharging. Check the level and top it up with the battery charged

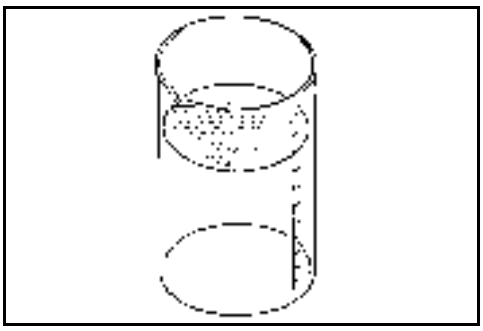

2. Electrolyte inspection:
   The battery fluid should be transparent. Check for clouding during the density check. In case of difficulty, pour it into a cup for the inspection.
   The check must always be carried out on several cells, because the density may differ from one element to another.

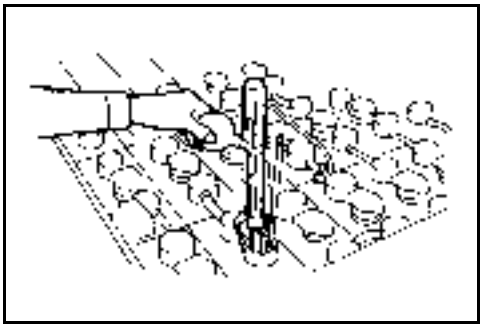

3. Checking the battery fluid density.
   Use a hydrometer to measure the density of the electrolyte.
   Density at full charge ....
   1.290 kg / l [20 °C]
   Density when completely discharged....
   1.130 kg / l [20 °C]

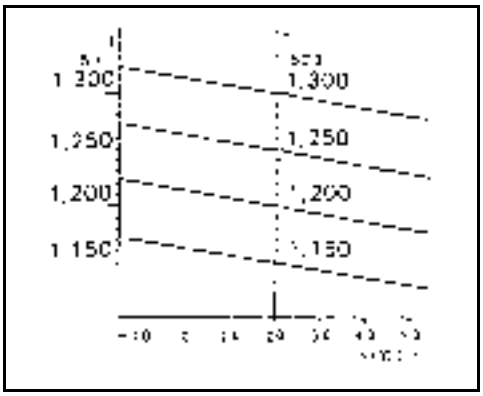

The density measurement varies according to the electrolyte temperature; it is advisable always to measure the electrolyte temperature at the same time as the density.

To have the exact density value, each measurement must be considered in relation to the standard temperature of 20°C.

Equation for converting the real measured density with the ideal density at 20°C.

$\mathbf{D_{20} = D_r + [\ 0.0007\ (T_r - 20)\ ]}$

$\mathbf{D_{20}}$: Ideal density at 20°C

$\mathbf{D_r}$: Real density measured at T_r °C

$\mathbf{T_r}$: Real temperature of the electrolyte (°C)

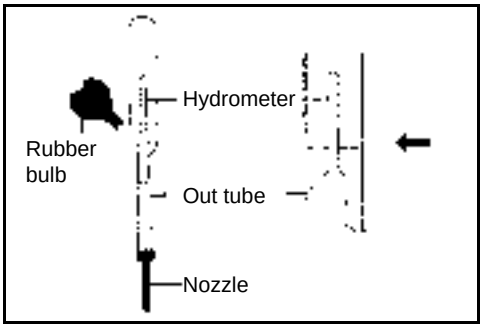

* How to use the hydrometer:
  (1) Fit the tube into the hole in the element containing the fluid, press teh pump, release it and let the fluid flow.
  (2) Allow the hydrometer to float without touching the external tube, or top or bottom, and when the bubbles in the fluid disappear, read the highest value of the scale on the fluid's surface, as shown in the figure.
  (3) After the measurement, carefully wash the inside and outside of the hydrometer with water and put it away after drying with a clean cloth.

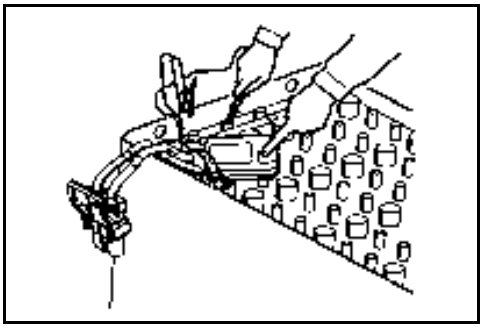

4. Insulation resistance measurement
   Measure the resistance between battery and battery case with an insulation resistance meter (megohmmeter).

   Insulation resistance .... 1 MΩ or more

Note:
When the insulation resistance is less than 1 MΩ, wash the battery with water after removing it from the vehicle.
Fully dry the washed battery and measure the insulation resistance again. Install the battery on the vehicle after confirming that the insulation resistance is 1 MΩ or more.

* Battery control table
Prepare a control table for each battery to record and maintain the inspection results.

Date and time inspection	Inspection number	Density electrolyte	Temperature electrolyte	Quantity added water	Notes	Inspector

STATE OF BATTERY CHARGE

The state of charge of a battery is measured by means of the electrolyte density.
Before measuring the electrolyte, ensure that the battery has been at rest for at least 30 minutes (see previous paragraph).

Remarks: The tables below represent ideal discharge values of lead-acid batteries

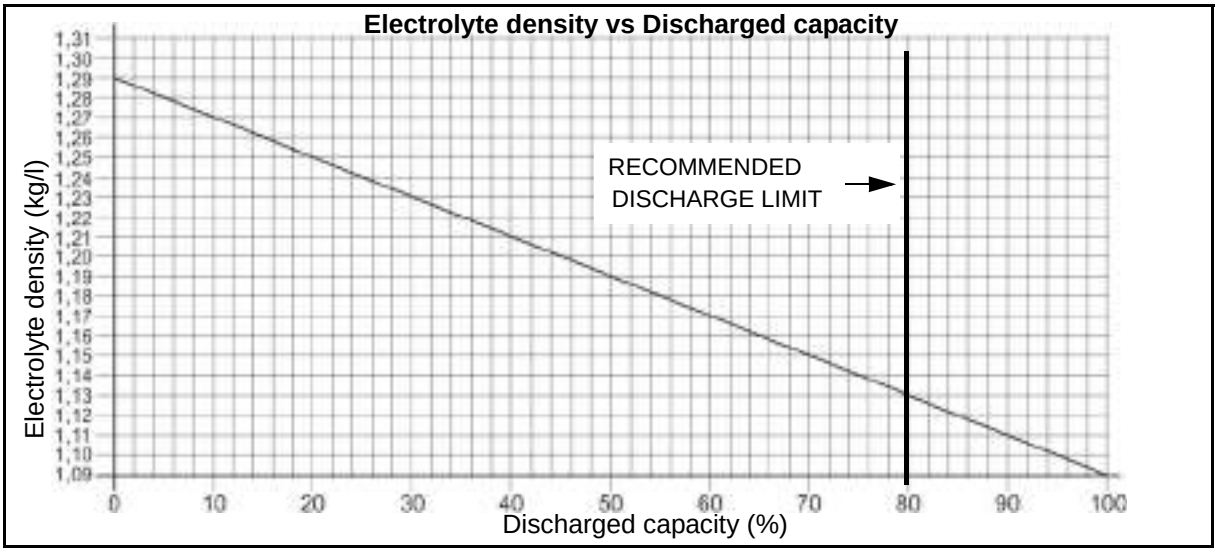

It is possible to convert the density (kg/l) approximately into voltage (V) for an indication of the state of charge.
Formula: **Density = (Volt / n° cells) - 0.84**

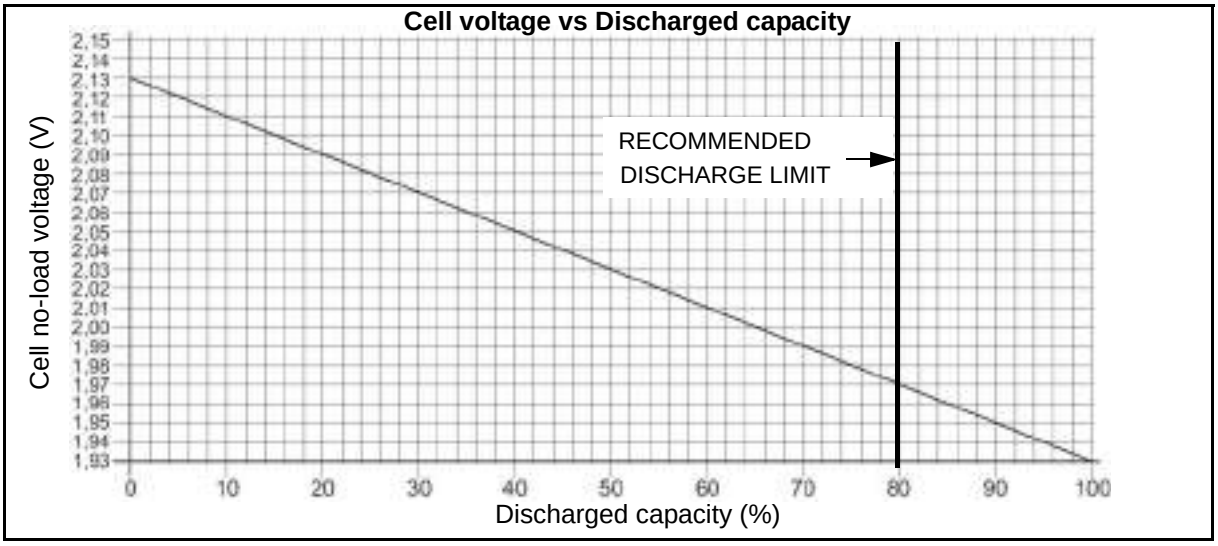

Battery discharge limits

Discharge protracted beyond the established limits makes recharging more difficult, as a longer time is required.
This happens on batteries that are removed from charging before they have been completely charged. At the next discharge they may be discharged to an even lower point, triggering an incorrect charge-discharge cycle which, with time, will cause permanent damage.
Remarks: The acid density limit below which it is not advisable to discharge the battery may be roughly considered as 1.13 Kg/l.
When the battery has run a long way down, it is important to recharge it as soon as possible.
It is advisable not to leave it completely discharged for more than one day.
Discharging the battery by more than 80% of its capacity means considerably reducing its life cycle.

BATTERY CAPACITY

The capacity of a battery is the amount of electricity that it can supply to an external circuit before the voltage falls below the final limit value; it is expressed in **Ah (Ampere-hour)**

The main factors that influence the capacity of lead-acid batteries are:

(1)Discharge rate

The capacity supplied at high discharge rates (high current intensity) is lower than that supplied at low discharge rates (low current intensity).
The causes of the decrease in the capacity supplied at high rates are the following:
(a)Sulphation of the plate surface, which closes the pores of the active material;
(b)Limited time for electrolyte diffusion;
(c)Loss of voltage due to the accumulator internal resistance.

(2)Electrolyte specific gravity

The specific gravity of the electrolyte influences the voltage and the capacity for the following reasons:
(d)It determines the potential of the plates;
(e)It influences the electrolyte viscosity and therefore its diffusion speed.

(3)Electrolyte temperature

Batteries operating in environments at low temperature undergo a temporary decrease of the capacity available and of the voltage (the rated capacity and voltage values are restored when the temperature returns to normal).
An increase in the battery temperature leads to an increase in its capacity.
The effect of the temperature on the capacity is due to the variations of the viscosity and resistance of the electrolyte.
At low temperatures the viscosity increases and this reduces the rate of diffusion of the acid in the pores of the active material.
The temperature effect is more sensitive at high discharge rates.
Due to the effect of the electrolyte temperature, the battery capacity varies as shown in the diagram below.

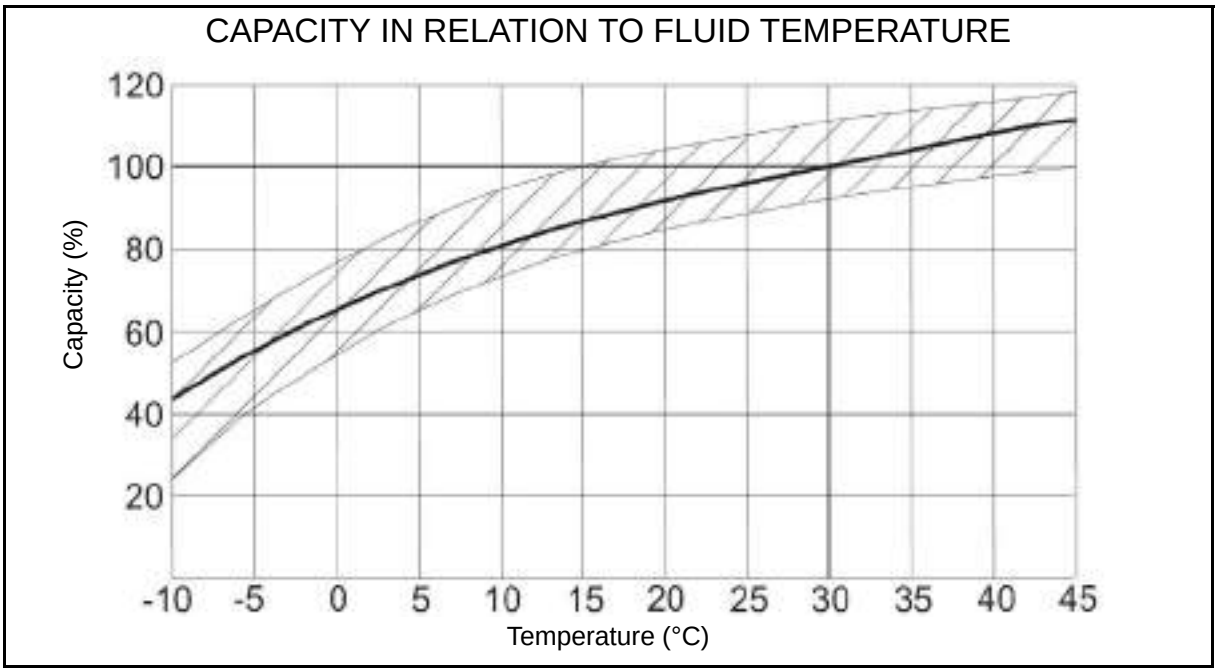

(4)Battery age

Traction batteries give their rated capacity after a few work cycles (charges and discharges), then maintain their performance for a considerable period of time (about 1500 cycles), depending on battery .

GEL BATTERIES

The following paragraph provides general information on gel batteries.
For more detailed information, refer to the supplier of the installed battery.

It is possible to install and use GEL batteries on the forklift truck; always adapt their weight so as to respect the minimum weight required, as indicated in the table in the paragraph "BATTERY CASE AND REQUIRED WEIGHTS".

In GEL batteries the electrolyte is immobilized (sulphuric acid in gel form), unlike traditional batteries where the electrolyte is in liquid form.
Notes: In GEL batteries the density cannot be measured.

In place of the caps, valves are fitted which perform the function of adjusting the internal pressure of the elements, opening in the event of excess pressure to let out the excess gases developed during charging and, at the same time, preventing the oxygen in the atmosphere from getting inside.

MAINTENANCE

The GEL battery does not need intense maintenance like traditional batteries.
- The battery never needs topping up.
- The valve caps must not be removed.

If the valves should accidentally be damaged, contact the service centre of the battery supplier to have them replaced.

The battery must be kept clean and dry to prevent current leakage. Any liquid present inside the battery box must be removed. Immediately repair any breaks in the coating of the case, to prevent drops in insulation and corrosion of the case. If this operation requires the removal of the elements, call the service centre of the battery supplier.

Every month, at the end of charging and with the battery disconnected from the battery charger, check the battery voltage and the voltage of every single element, recording it on a special chart.
If a significant variation is found with respect to the previous record, carry out a new series of checks on the data found and, if necessary, request the intervention of the service centre of the battery supplier .

If the autonomy is not sufficient, proceed as follows:
- Check that the work being done is compatible with the battery capacity;
- Check the state of the rectifier;
- Check the discharge limiter.

DISCHARGE

In order to guarantee a good battery life, the battery must not be discharged below 80% of the rated capacity (full discharge) which corresponds to **1.83 V per element.**

Notes: It is important for the battery temperature to remain between +5°C and + 35 °C during the work cycle. The battery life will be optimal with a temperature between 25-30 °C.

CHARGE

The complete charge of the battery must be carried out at the end of every shift. Do not leave the batteries discharged for long periods of time.
The batteries must be charged using high-frequency battery chargers indicated by the battery supplier; choosing a rectifier different from the one indicated by the supplier may cause damage to the battery.
The room where the battery is being charged must be ventilated.

Notes: It is necessary to wait a sufficient time for the battery to cool before using it once charging is complete.

ADJUSTING THE GEL BATTERY INDICATOR

If the truck is fitted with a GEL battery, set the parameter **BDI GEL = ON**
If this is not adjusted, it will not be possible to have a correct reading of the battery charge, risking serious damage to the battery itself.

By setting the parameter BDI GEL to ON the traction logic unit will load a different discharge curve.
The parameters BDI ADJ MAX and BDI ADJ MIN maintain their function but change their value:

BDI RESET
This parameter determines the minimum recharge the battery has to receive for the partial or total reset of the indicator.

Parameter	Min value	Max value	Step	Standard	Notes
BDI RESET	0%	100%	5%	30%	Reducing the value we reduce the quantity of partial charge needed to reset the indicator

BDI ADJ MIN
This parameter determines the voltage below which the battery indicator signals 0% residual charge

Parameter	Min value	Max value	Step	Standard	Notes
BDI ADJ MIN	- 12,80%	+ 12,70%	0,10%	- 4,00%	0,00% = 21,500 V

BDI ADJ MAX
This parameter determines the voltage above which the battery indicator signals 100% charge

Parameter	Min value	Max value	Step	Standard	Notes
BDI ADJ MAX	- 12,80%	+ 12,70%	0,10%	- 3,00%	0,00% = 25,940 V

ADJUSTMENT 3
This parameter determines the reset curve

Parameter	Min value	Max value	Step	Standard	Notes
ADJUSTMENT 3	0,00%	+ 12,70%	0,10%	+ 3,00%	0,00% = 0,00 V

Periodically check the voltage of the single battery elements at the end of discharge.
The voltage must not be lower than 1.83 V per element laden and 1.98 V unladen (corresponding to a total charge of 21.96V laden and 23.76V unladen) at the end of discharge (corresponding to 0% of the battery indicator on the display).
Otherwise increase the value of the parameter BDI ADJ MIN until it reaches the allowed limit threshold of 21.96 V laden and 23.76V unladen.

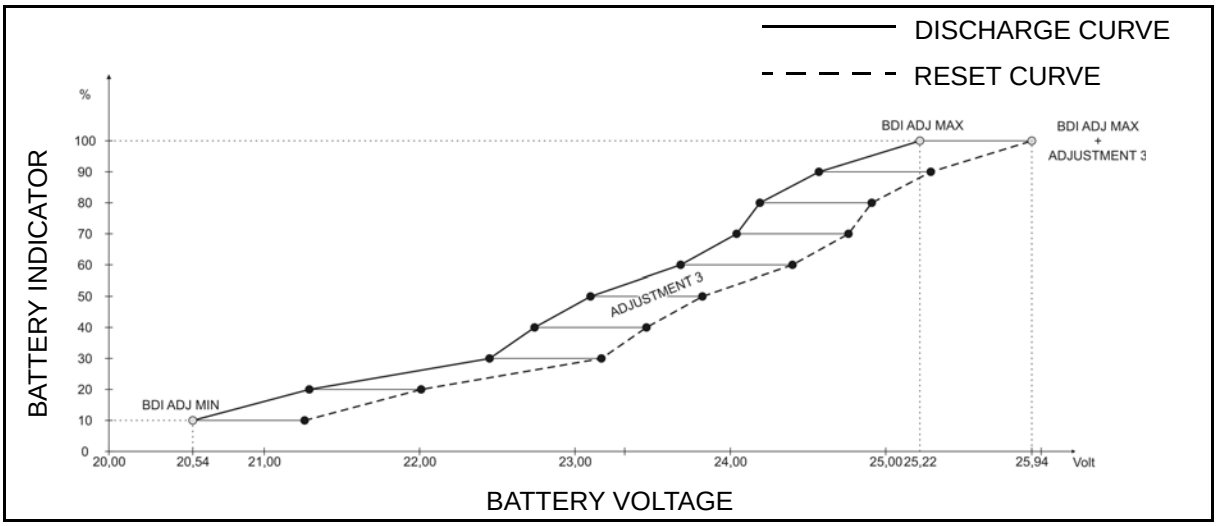

BATTERY

REMOVAL • INSTALLATION

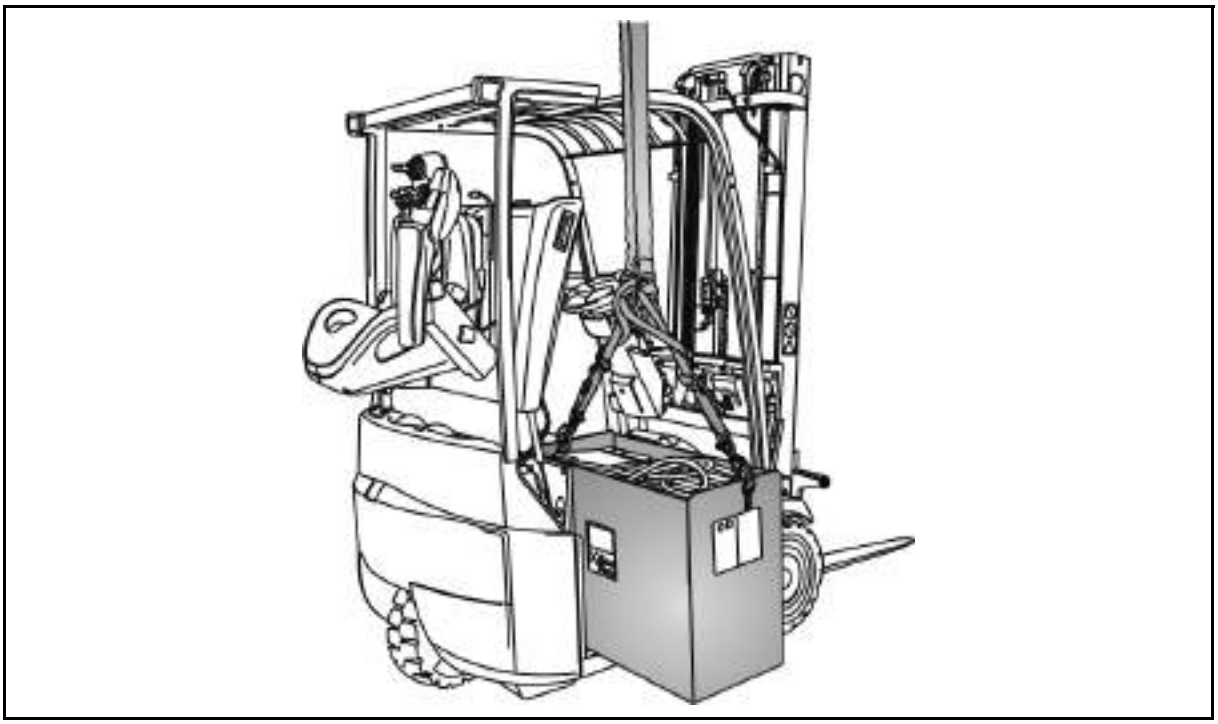

Removal procedure

1. Park the truck on a level surface and activate the parking brake
2. Turn off the truck
3. Open the compartment and disconnect the battery
4. Remove the battery safety locks **[Point 1]**
5. Remove the battery **[Point 2]**

Installation procedure

The reassembly procedure is the reverse of the disassembly procedure.

Point Operations

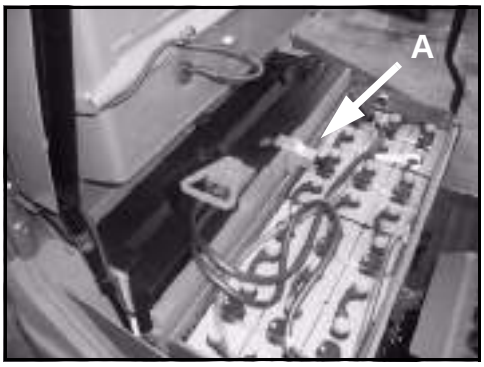

[Point 1]
Disassembly:
Remove the battery safety hook **(A)**

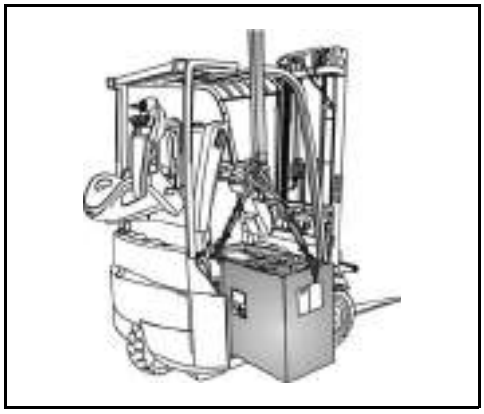

[Point 2]
Disassembly:
Remove the battery from the truck

CONTROLLERS

Page

GENERAL 2-2
SPECIFICATIONS 2-3
BEFORE REPAIR 2-4
MAIN CONTROLLERS 2-6
- TRACTION LOGIC UNIT 2-6
- LIFTING LOGIC UNIT 2-7
- I/O BOARD 2-8
- ARMREST CARD 2-11
- MHYRIO 2-13
- CONTACTOR GROUP 2-15
- DASHBOARD 2-16

CONTROL UNIT 2-17
I/O CONTROL BOARD 2-21
MHYRIO LOGIC UNIT 2-22
CONTACTOR GROUP 2-23
- INSPECTION 2-24

DASHBOARD 2-25
ARMREST CARD 2-26
FUSE 24 VOLT 2-28
ACCELERATOR POTENTIOMETER ADJUSTMENT 2-29
ADJUSTING THE FOOT BRAKE SWITCH 2-30
PARKING BRAKE SWITCH ADJUSTMENT 2-30
LIFTING POTENTIOMETER ADJUSTMENT 2-31
NECESSARY ADJUSTMENTS AFTER A HARDWARE COMPONENT REPLACED 2-32

GENERAL

The truck is equipped with traction & lifting logic units that control traveling and material handling system. They are multi-functional controllers equipped with micro computers.
The traction & lifting logic units provide high performance in a wide range by means of inverter control of the AC motor drive system.
The main controllers have a self-diagnosis function that automatically detects any abnormality of the main traction/lifting circuits, accelerator, brake or any other sensor and displays the corresponding error code together with a warning beep.
At the same time, an action such as traction disabling, lifting disabling or restriction of traveling speed is automatically taken to ensure safety.
In addition, setting the display in analyzer mode (fault analysis) it is possible to identify faulty portions and inspect the main traction / lifting circuits and each operating system and sensors.

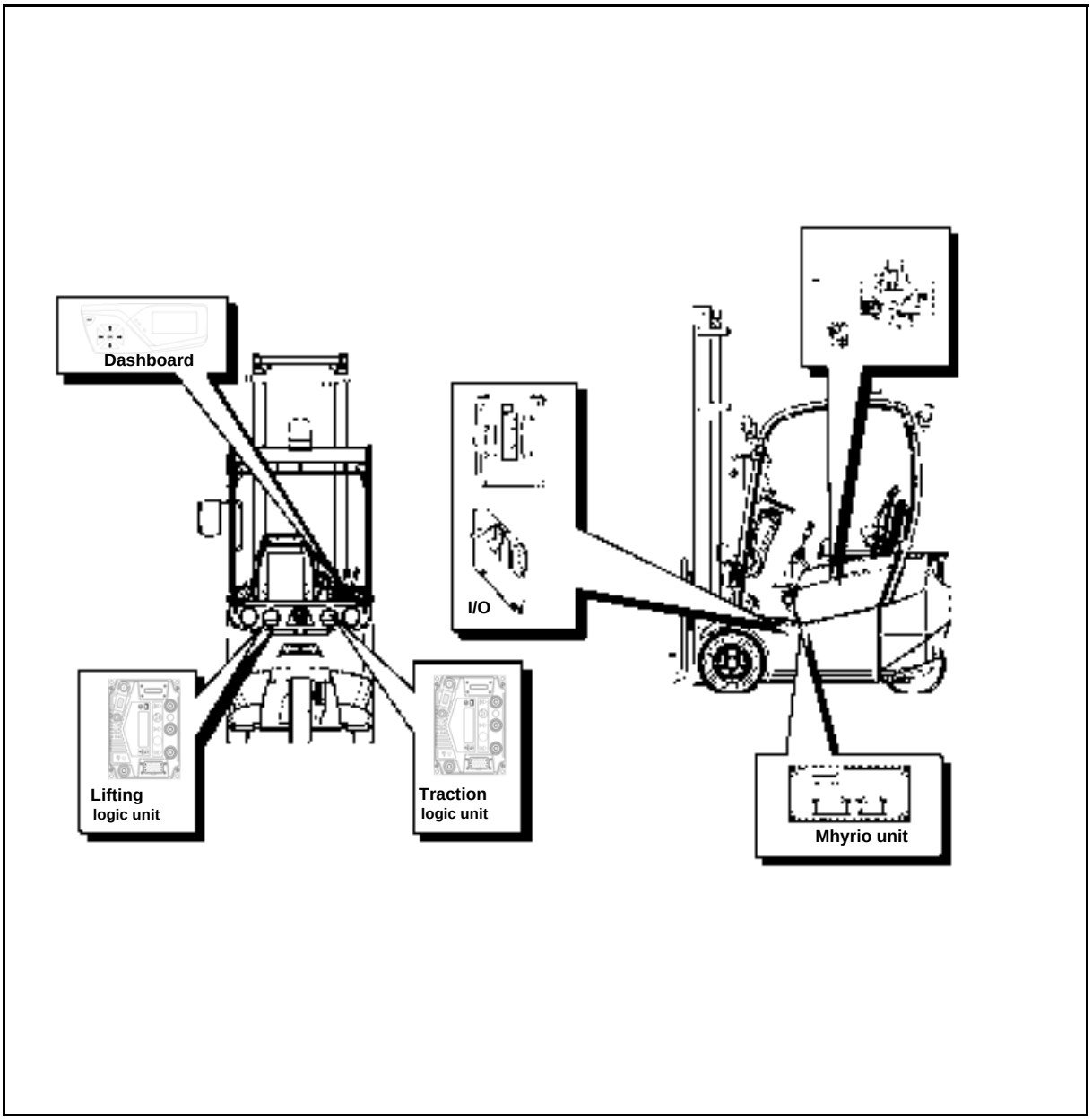

SPECIFICATIONS

		1.0 - 1.5 t
POWER FUSES	FT (traction logic unit)	350 A
	FP (lifting logic unit)	350 A
FUSES (+Vb)	F1 (I/O board)	BLADE FUSE 10 A
	F2 (optional fuse holder)	BLADE FUSE 40 A
	F3 (heater)	BLADE FUSE 40 A
	F4 (key)	BLADE FUSE 5 A
CONTACTORS	CT1 (line)	SW60B-230 24 V
	CT2 (traction/lifting logic units)	SU280B-1004 24 V CO
ARMREST OPT FUSES	FA (horn)	BLADE FUSE 5 A
	FB (low beam/position lights)	BLADE FUSE 7.5 A
	FC (rotating/flashing beacon lamp)	BLADE FUSE 5 A
	FD (wind-screen wipers)	BLADE FUSE 7.5 A
	FE (intermittence)	BLADE FUSE 5 A
	FF (heater)	BLADE FUSE 7.5 A
	FG (heated rear window)	BLADE FUSE 7.5 A
	FH (work lights)	BLADE FUSE 7.5 A
	FI (fans)	---
	FL (Radio)	BLADE FUSE 5 A

BEFORE REPAIR

INSPECTION

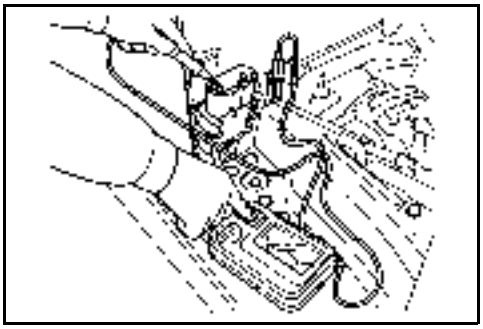

1. Insulation resistance measurement

Note:
Carry out the measurement before inspecting the traction/lifting units.

(1)Disconnect the battery plug and measure the resistance between the plug and the battery body

Measurement terminals	Logic units side of battery plug-body
Standard:	The resistance value depends greatly on the vehicle operating state, place and weather. (Approx.1MΩ or more)

Some components can be inspected after they are removed from the vehicle, other ones can only be inspected as installed on the vehicle.
The logic units must be inspected on the vehicle since the battery voltage must be applied.
This explanation is mainly for inspection of the controller as removed from the vehicle.

Removal procedure

- Overhauling the control panels is rarely necessary. In most cases, failed parts are replaced after finding out the cause of the failure from inspection. Therefore, make sure to repair correctly by referring to the figures of configuration and assembly.
- Do not disassemble traction / lifting logic units and the other main controllers, as they should be replaced in a form of group not disassembled.

Caution for part replacement

- Observe the specified bolts tightening torque. An insufficient or excessive tightening torque may cause other failure.
- When disconnecting the bars and harness, record the connecting location and place tags. When connecting them again, be sure to confirm with the records and tags to prevent incorrect connection. Incorrect connection may cause other failure.
- Always apply new silicon grease when reassemble parts originally coated with this material. Otherwise, overheating may occur.
- After installation, check there is no interference of the bar and harness connection with other portion.

CONNECTOR INSPECTION

When inspect each board and find the cause of the trouble, do not replace the board immediately but check the following items.

- **Abnormalies in related harnesses**
- **Looseness of the related connectors**
- **Bending or damage of connector pin and defective contact of any related connector pin**

If any of the above is the cause of the trouble and the board is replaced with a new one, the new board will be damaged.
Always replace the board after careful inspection.
When the trouble derives from a logic unit or board, measure the voltage and resistance of every part involved in the substitution. Always disconnect the battery plug before measuring the resistance.

Important:
Disconnect the battery plug before connecting or disconnecting the logic unit.
Note:
When a logic unit is determined to be the cause of trouble as the result of troubleshooting, always measure the applied voltage and resistance of each related portion when replacing.

(1)Setting Method
(a)Key switch OFF and battery plug disconnected.
(b)Connect the multimeter to the corresponding connector pin

Important:
As connection of the wrong connector pin may damage normal portions, make sure to confirm the connector pin number.

(2)Measurement method and standard list
How to read the list

CN (pin-colour) ⇔ CN (pin-colour) From ⇔ To	Description	Standard	Notes

JAT (1-B9)	J15 (1-B9)	EN1 encoder + V	+ 12 V	

COLOUR CODING

	COLORI	COLOURS	FARBEN	COULEURS	COLORES
C	arancio	orange	orange	orange	naranja
A	azzurro	blue	blau	bleu	azul
B	bianco	white	weiß	blanc	blanco
L	blu	dark blue	dunkelblau	bleu marine	azul intenso
G	giallo	yellow	gelb	jaune	amarillo
H	grigio	grey	grau	gris	gris
M	marrone	brown	braun	marron	castaño
N	nero	black	schwarz	noir	negro
S	rosa	pink	pink	rose	rosa
R	rosso	red	rot	rouge	rojo
V	verde	green	grün	vert	verde
Z	viola/porpora	purple	violett	violet	púrpura

MAIN CONTROLLERS

TRACTION LOGIC UNIT

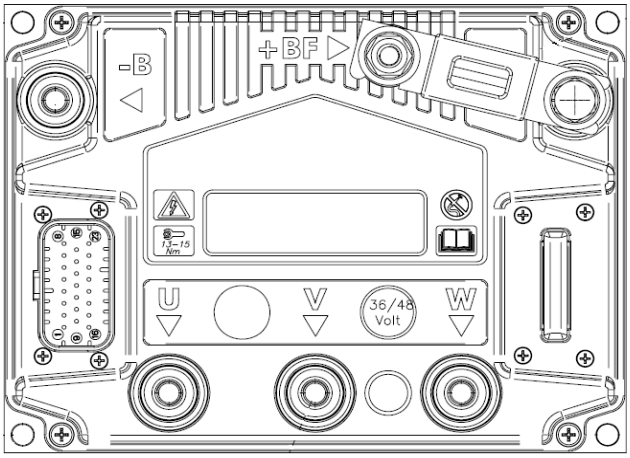

Basic conditions (battery plug connected, key switch ON).
See the reference names of the connectors in the electrical diagram.

CN (pin-colour) ⇔ CN (pin-colour) From ⇔ To		Description	Standard	Notes
JT (1-R04)	J50 (2-R04)	Input +V key	+Vb	
JT (2-AG)	J14 (3-AG)	Output +V steering potentiometer	5 V	
JT (3)	---	Unused		
JT (4)	---	Unused		
JT (5-HN)	J14 (1-HN)	Steering potentiometer negative ouptut	GND	
JT (6-BZ)	J50 (12-BZ)	Seat microswitch input		
JT (7-NV)	J15 (3-NV)	drive motor encoder input channel A	0 - 12V	
JT (8-BS)	JDT (1-BS)	Output +V drive motor encoder	+12 V	
JT (9)	---	Unused		
JT (10-V)	J14 (2-V)	steer potentiometer cursor input	0 - 5 V	
JT (11-LV)	JP (19-LV)	Safety IN	GND	
JT (12)	---	Unused		
JT (13)	---	Unused		
JT (14-BL)	J15 (4-BL)	drive motor encoder input channel B	0 - 12V	
JT (15-BV)	J15 (2-BV)	Drive motor encoder negative output	GND	
JT (16-Z)	J50 (1-Z)	Contactor CT2 negative output	GND	
JT (17-Z)	J50 (8-Z)	Output + V contactor CT2	+Vb	
JT (18)	---	Unused		
JT (19)	---	Unused		
JT (20-HG)	---	CAN-BUS LOW		
JT (21-AN)	---	CAN-BUS HIGH		
JT (22-SL)	J2 (2-SL)	Output +V drive motor temp. sensor		
JT (23-RL)	J2 (1-RL)	Drive motor temp. sensor negative output	GND	

LIFTING LOGIC UNIT

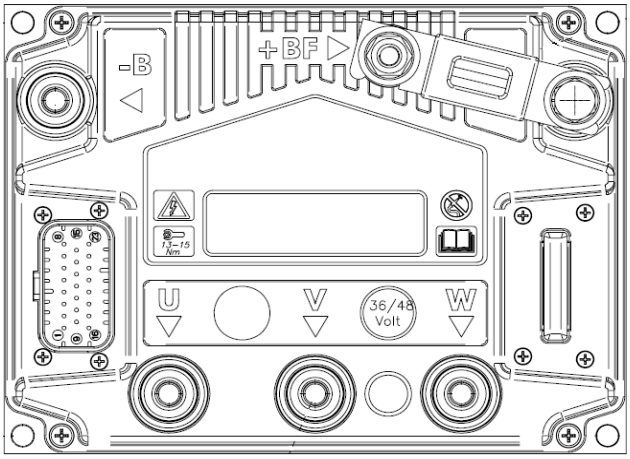

Basic conditions (battery plug connected, key switch ON).
See the reference names of the connectors in the electrical diagram.

CN (pin-colour) ⇔ CN (pin-colour) From ⇔ To		Description	Standard	Notes
JP (1-R04)	J50 (2-R04)	Input +V key	+Vb	
JP (2)	---	Unused		
JP (3)	---	Unused		
JP (4-R04)	J50 (2-R04)	Input +V key	+Vb	
JP (5)	---	Unused		
JP (6-BZ)	J50 (12-BZ)	Seat microswitch input		
JP (7-AV)	J13 (3-AV)	Pump motor encoder input channel A	0 - 12V	
JP (8-AZ)	J13 (1-AZ)	Output +V pump motor encoder	+12 V	
JP (9-NZ)	J50 (14-NZ)	Negative input	GND	
JP (10)	---	Unused		
JP (11-NZ)	J50 (14-NZ)	Negative input	GND	
JP (12)	---	Unused		
JP (13)	---	Unused		
JP (14-HV)	J13(4-HV)	Pump motor encoder input channel B	0 - 12V	
JP (15-GN)	J13(2-GN)	Pump motor encoder negative output	GND	
JP (16)	---	Unused		
JP (17)	---	Unused		
JP (18)	---	Unused		
JP (19-LV)	JT (11-LV)	SAFETY IN	GND	
JP (20-HG)	---	CAN-BUS LOW		
JP (21-AN)	---	CAN-BUS HIGH		
JP (22-CN)	J3 (2-CN)	Output +V pump motor temp. sensor		
JP (23-RV)	J3 (1-RV)	Pump motor temp. sensor negative output	GND	

I/O BOARD

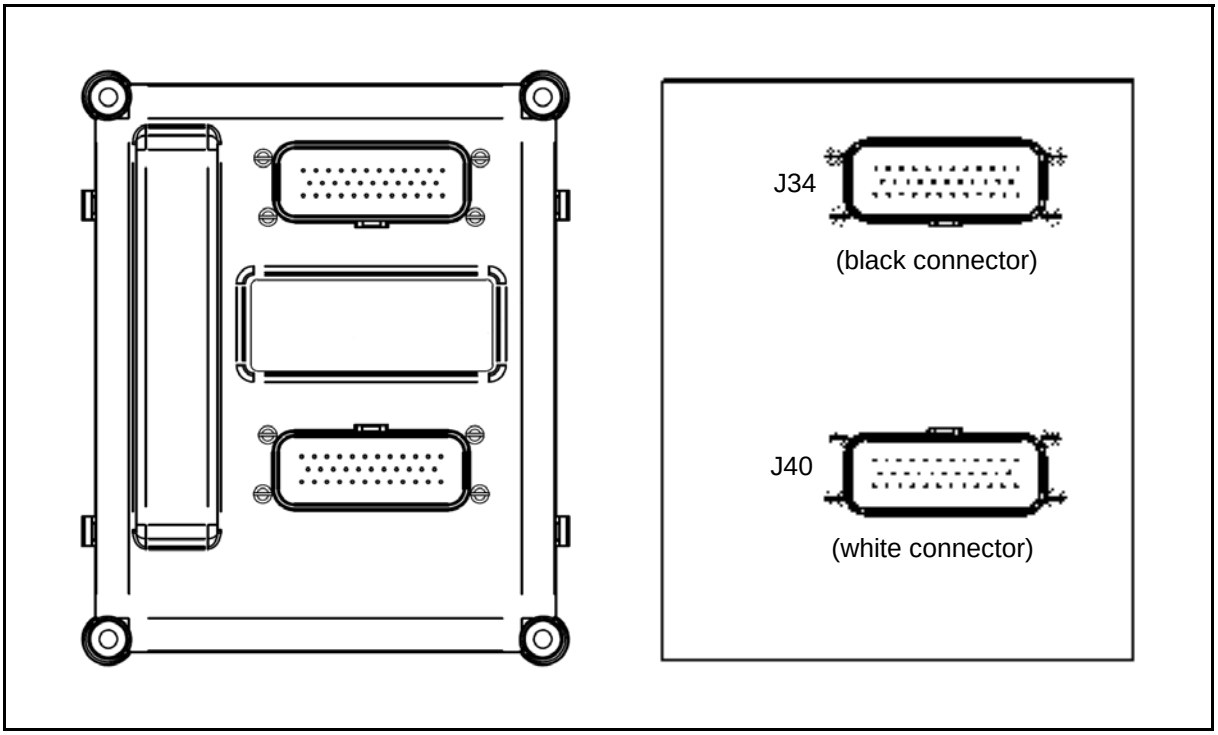

Basic conditions (battery plug connected, key switch ON).
See the reference names of the connectors in the electrical diagram.

CN (pin-colour) ⇔ CN (pin-colour) From ⇔ To		Description	Standard	Notes
J34 (1-MN)	J93 (2-MN)	Output +V rear lights	+Vb	
J34 (2-HN)	J29 (2-HG) J32 (2-HG)	Accelerator potentiometer negative ouptut	GND	
J34 (3-V)	J29 (1-V) J32 (3-V)	Accelerator potentiometer cursor input	0 - 5V	
J34 (4)	---	Unused		
J34 (5-AG)	J29 (3-AG) J32 (1-AG)	Output + V accelerator potentiometer	5V	
J34 (6-L)	---	Negative input	GND	
J34 (7-N)	---	Negative input	GND	
J34 (8-N)	---	Negative input	GND	
J34 (9-B)	J11 (2-B)	Horn signal output	GND	
J34 (10-N)	---	Negative input	GND	
J34 (11-R04)	J50 (4-R02)	Board power input	+Vb	
J34 (12-CR)	J131 (4-CR)	Armrest board power output	+Vb	
J34 (13-AM)	J91 (2-AM)	Output +V stop lights	+Vb	
J34 (14-NZ)	J50 (10-NZ)	Parking brake signal input	5V	*GND with micro closed*
J34 (15-BZ)	J31 (2-BZ)	Brake pedal system signal input	5V	*GND with micro closed*

CN (pin-colour) ⇔ CN (pin-colour) From ⇔ To		Description	Standard	Notes
J34 (16-BM)	J35 (4-BM)	Horn button signal input	5V	*GND with micro closed*
J34 (17)	---	Unused		
J34 (18-BN)	J33 (9-BN)	double pedal system reverse micro input double	5V	*GND with micro closed*
J34 (19-RN)	J35 (3-RN) J33 (8-RN) J48 (10-RN)	reverse consent signal input	5V	*GND with micro closed*
J34 (20-BH)	J33 (3-BH)	double pedal system forward micro input double	5V	*GND with micro closed*
J34 (21-HG)	---	CAN-BUS LOW		
J34 (22-HG)	---	CAN-BUS LOW		
J34 (23-HG)	---	CAN-BUS LOW		
J34 (24-R07)	J50 (5-R07) J50 (6-R07)	Auxiliary power input	+Vb	
J34 (25-LG)	J33 (5-LG)	Double foot board configuration input	5V	*GND with micro closed*
J34 (26)	---	Unused		
J34 (27)	---	Unused		
J34 (28)	---	Unused		
J34 (29)	---	Unused		
J34 (30-RH)	J35 (2-RH) J33 (2-RH) J48 (5-RH)	reverse consent signal input	5V	*GND with micro closed*
J34 (31-LS)	J33 (12-LG)	Single foot board micro input	5V	*GND with micro closed*
J34 (32-RV)	J33 (11-RV)	Single foot board micro input	5V	*GND with micro closed*
J34 (33-AN)	---	CAN-BUS HIGH		
J34 (34-AN)	---	CAN-BUS HIGH		
J34 (35-AN)	---	CAN-BUS HIGH		
J40 (1-MG)	J48 (12-MG)	Lifting micro signal input	5V	*GND with micro closed*
J40 (2)	---	Unused		
J40 (3-HM)	J48 (3-HM)	Sideshift micro signal input	5V	*GND with micro closed*
J40 (4-AB)	J48 (4-AB)	4th way signal input	5V	*GND with micro closed*
J40 (5)	---	Unused		
J40 (6-L)	---	Negative input	GND	
J40 (7-AG)	J48 (7-AG)	Output + V lifting potentiometer	5V	
J40 (8-HG)	---	CAN-BUS LOW		
J40 (9-HN)	J48 (9-HN)	Lifting potentiometer negative ouptut	GND	
J40 (10-AR)	J48 (2-AR)	Tilting micro signal input	5V	*GND with micro closed*

CN (pin-colour) ⇔ CN (pin-colour) From ⇔ To		Description	Standard	Notes
J40 (11-V)	J48 (11-V)	Potentiometer cursor input lifting	0 - 5V	
J40 (12)	---	Unused		
J40 (13)	---	Unused		
J40 (14)	---	Unused		
J40 (15-AN)	---	CAN-BUS HIGH		
J40 (16-GR)	J23 (3-GR)	Output +V Tilt lock solenoid valve	+Vb	
J40 (17-N)	---	negative input	GND	
J40 (18)	---	Unused		
J40 (19-BC)	J23 (1-BC)	Output +V lower lock solenoid valve	+Vb	
J40 (20-R07)	J50 (5-R07) J50 (6-R07)	Auxiliary power input	+Vb	
J40 (21-R07)	J50 (5-R07) J50 (6-R07)	Auxiliary power input	+Vb	
J40 (22)	---	Unused		
J40 (23)	---	Unused		

ARMREST CARD

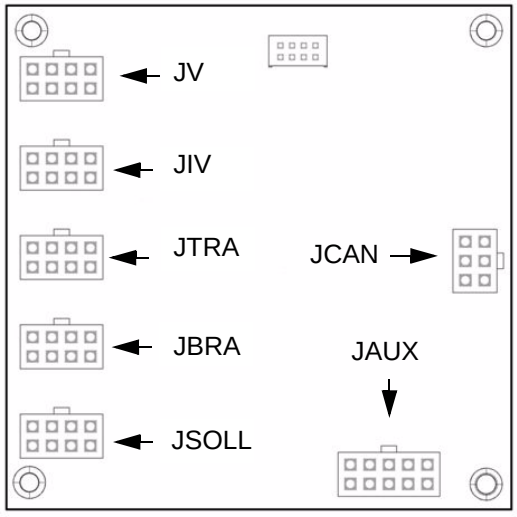

Basic conditions (battery plug connected, key switch ON) [Mini-lever specification vehicle].
See the reference names of the connectors in the electrical diagram.

CN (pin-colour) ⇔ CN (pin-colour) From ⇔ To		Description	Standard	Notes
JCAN (1-HG)	---	CAN-BUS LOW		
JCAN (2-AN)	---	CAN-BUS HIGH		
JCAN (3-N)	---	Negative	GND	
JCAN (4-SHD)	---	Unused		
JCAN (5-CR)	J34 (12-CR)	Board power input	+Vb	
JCAN (6-N)	---	Negative	GND	
JAUX (1-H)	---	+V Hand direction lever potentiometer	5V	
JAUX (2-S)	---	Manual inversor shuttle signal	0-5V	
JAUX (3-BR)	---	Hand direction lever negative	GND	
JAUX (4-LC)	---	Reverse direction signal		
JAUX (5-V)	---	Forward direction signal		
JAUX (6-L)	J142 (2-L)	Input		
JAUX (7)	---	Unused		
JAUX (8-Z)	J141 (3-Z)	Input		
JAUX (9)	---	Unused		
JAUX (10-N)	---	Negative	GND	
JSOLL (1)	---	+V Lifting/lowering potentiometer	5V	
JSOLL (2)	---	Pot slide	0-5V	
JSOLL (3)	---	Unused		
JSOLL (4)	---	Negative potentiometer	GND	
JSOLL (5)	---	Microswitch	5V	
JSOLL (6)	---	Microswitch	5V	

CN (pin-colour) ⇔ CN (pin-colour) From ⇔ To		Description	Standard	Notes
JSOLL (7)	---	Unused		
JSOLL (8)	---	Negative micro	GND	
JBRA (1)	---	+V Pot	5V	
JBRA (2)	---	Pot slide	0-5V	
JBRA (3)	---	Unused		
JBRA (4)	---	Negative potentiometer	GND	
JBRA (5)	---	Microswitch	5V	
JBRA (6)	---	Microswitch	5V	
JBRA (7)	---	Unused		
JBRA (8)	---	Negative micro	GND	
JTRA (1)	---	+V Pot	5V	
JTRA (2)	---	Pot slide	0-5V	
JTRA (3)	---	Unused		
JTRA (4)	---	Negative potentiometer	GND	
JTRA (5)	---	Microswitch	5V	
JTRA (6)	---	Microswitch	5V	
JTRA (7)	---	Unused		
JTRA (8)	---	Negative micro	GND	
JIV (1)	---	+V Pot	5V	
JIV (2)	---	Pot slide	0-5V	
JIV (3)	---	Unused		
JIV (4)	---	Negative potentiometer	GND	
JIV (5)	---	Microswitch	5V	
JIV (6)	---	Microswitch	5V	
JIV (7)	---	Unused		
JIV (8)	---	Negative micro	GND	
JV (1)	---	+V Pot	5V	
JV (2)	---	Pot slide	0-5V	
JV (3)	---	Unused		
JV (4)	---	Negative potentiometer	GND	
JV (5)	---	Microswitch	5V	
JV (6)	---	Microswitch	5V	
JV (7)	---	Unused		
JV (8)	---	Negative micro	GND	

MHYRIO

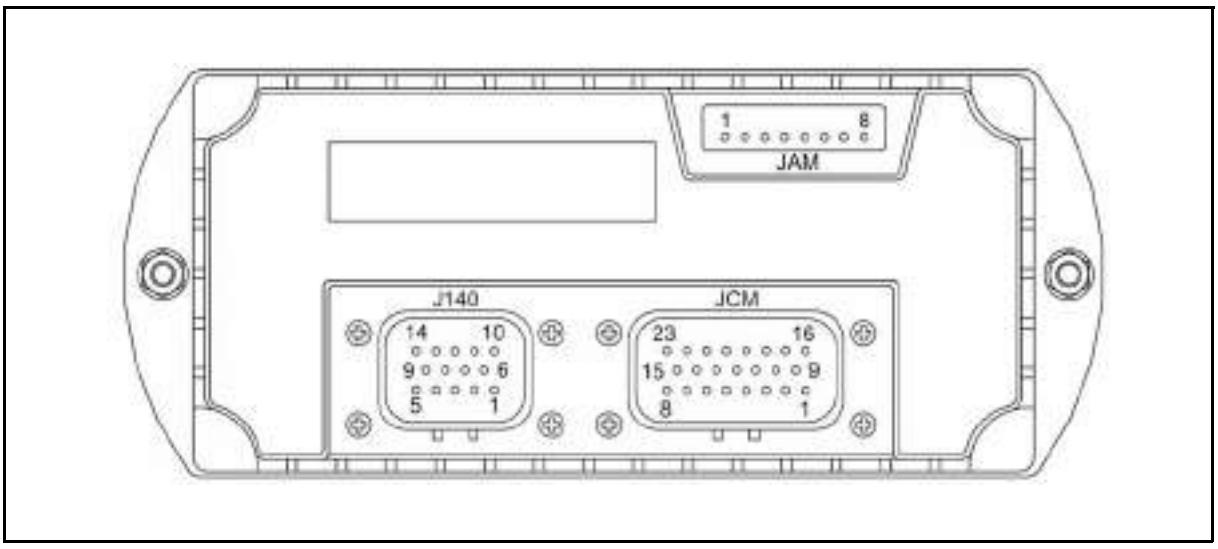

Basic conditions (battery plug connected, key switch ON) [Mini-lever specification vehicle].
See the reference names of the connectors in the electrical diagram.

CN (pin-colour) ⇔ CN (pin-colour) From ⇔ To		Description	Standard	Notes
J140 (1-R07)	J50 (6-R07) J50 (5-R07)	Output + V Board power	+Vb	
J140 (2-R07)	J50 (6-R07) J50 (5-R07)	Output + V Board power	+Vb	
J140 (3-N)	J1 (-)	Negative input	GND	
J140 (4-HG)	---	CAN-BUS LOW		
J140 (5)	---	Unused		
J140 (6)	---	Unused		
J140 (7)	---	Unused		
J140 (8)	---	Unused		
J140 (9)	---	Unused		
J140 (10)	---	Unused		
J140 (11)	---	Unused		
J140 (12)	---	Unused		
J140 (13-AN)	---	CAN-BUS HIGH		
J140 (14)	---	Unused		
JAM (1)	---	Console input		
JAM (2)	---	Console input		
JAM (3)	---	Console input		
JAM (4)	---	Console input		
JAM (5)	---	Console input		
JAM (6)	---	Console input		
JAM (7)	---	Console input		
JAM (8)	---	Console input		

CN (pin-colour) ⇔ CN (pin-colour) From ⇔ To		Description	Standard	Notes
JCM (1-GN)	J107 (2-GN)	solenoid valve negative output EVP1	GND	
JCM (2-G)	J107 (1-G) J108 (1-G)	Output +V solenoid valve EVP1 and EV2	+24V	
JCM (3-BG)	J108 (2-BG)	Solenoid valve negative output EV2	GND	
JCM (4-BM)	J109 (2-BM)	Solenoid valve negative output EV3	GND	
JCM (5-M)	J109 (1-M) J110 (1-M)	Output +V solenoid valve EV3 and EV4	+24V	
JCM (6-MN)	J110 (2-MN)	Solenoid valve negative output EV4	GND	
JCM (7-ZN)	J111 (2-ZN)	Solenoid valve negative output EV5	GND	
JCM (8-Z)	J111 (1-Z) J112 (1-Z)	Output +V solenoid valve EV5 and EV6	+24V	
JCM (9)	---	5th way solenoid valve negative output (ON/OFF valve)	GND	
JCM (10)	---	Unused		
JCM (11)	---	Unused		
JCM (12-BV)	J113 (2-BV)	Solenoid valve negative output EV7	GND	
JCM (13-V)	J113 (1-V) J114 (1-V)	Output +V solenoid valve EV7 and EV8	+24V	
JCM (14-NV)	J114 (2-NV)	Solenoid valve negative output EV8	GND	
JCM (15-BZ)	J112 (2-BZ)	Solenoid valve negative output EV6	GND	
JCM (16)	---	Output +V 5th way solenoid valve (ON / OFF valve)	+24V	
JCM (17)				
JCM (18)				
JCM (19-BC)	J117 (2-BC)	Solenoid valve negative output EVP	GND	
JCM (20-C)	J117 (1-C)	Output + V solenoid valve EVP	+24V	
JCM (21)				
JCM (22)				
JCM (23-N)	J1 (-)	Negative input	GND	

CONTACTOR GROUP

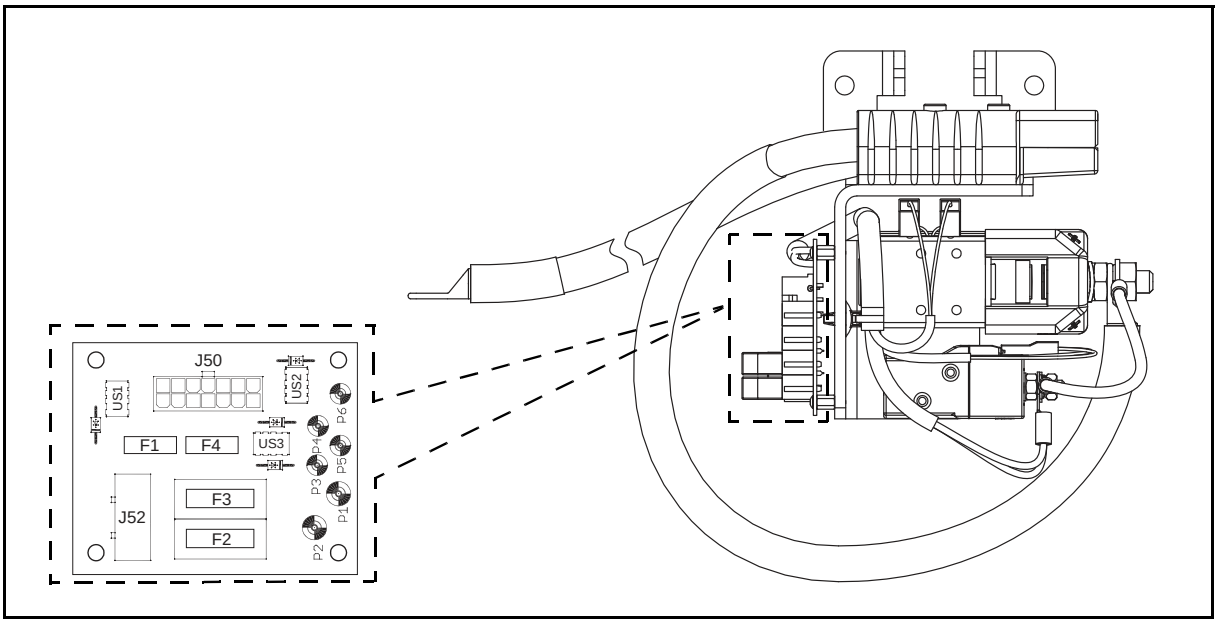

Basic conditions (battery plug connected, key switch ON).
See the reference names of the connectors in the electrical diagram.

CN (pin-colour) ⇔ CN (pin-colour) From ⇔ To		Description	Standard	Notes
J50 (1-Z)	JT (16-Z)	Contactor CT2 negative input	GND	
J50 (2-R04)	J50 (4-R02)	Relay US3 power input	+Vb	
J50 (3-N)	---	Negative	GND	
J50 (4-R02)	J21 (1-R02)	Output + V key	+Vb	
J50 (5-R07)	J40 (20-R07) J40 (21-R07) J34 (24-R07)	I/O board auxiliary power output	+Vb	
J50 (6-R07)	J40 (20-R07) J40 (21-R07) J34 (24-R07)	I/O board auxiliary power output	+Vb	
J50 (7-NL)	J20 (1-NL)	Seat micro signal input		
J50 (8-Z)	JT (17-Z)	Input + V contactor CT2	+Vb	
J50 (9-AB)	J71 (2-AB) J137 (13-AB)	Alarms buzzer negative output	GND	
J50 (10-NZ)	J34 (14-NZ)	Parking brake signal		
J50 (11-L)	---	Negative	GND	
J50 (12-BZ)	JT (6-BZ) JP (6-BZ)	Seat microswitch signal		
J50 (13-BV)	J30 (3-BV)	Parking brake microswitch output		
J50 (14-NZ)	JP (9-NZ) JP (11-NZ)	Negative	GND	
J52 (1-R09)	J90 (1-R09)	OPT fuse holder power output	+Vb	
J52 (2-R08)	J107/A (1-R08)	Heater power output	+Vb	

DASHBOARD

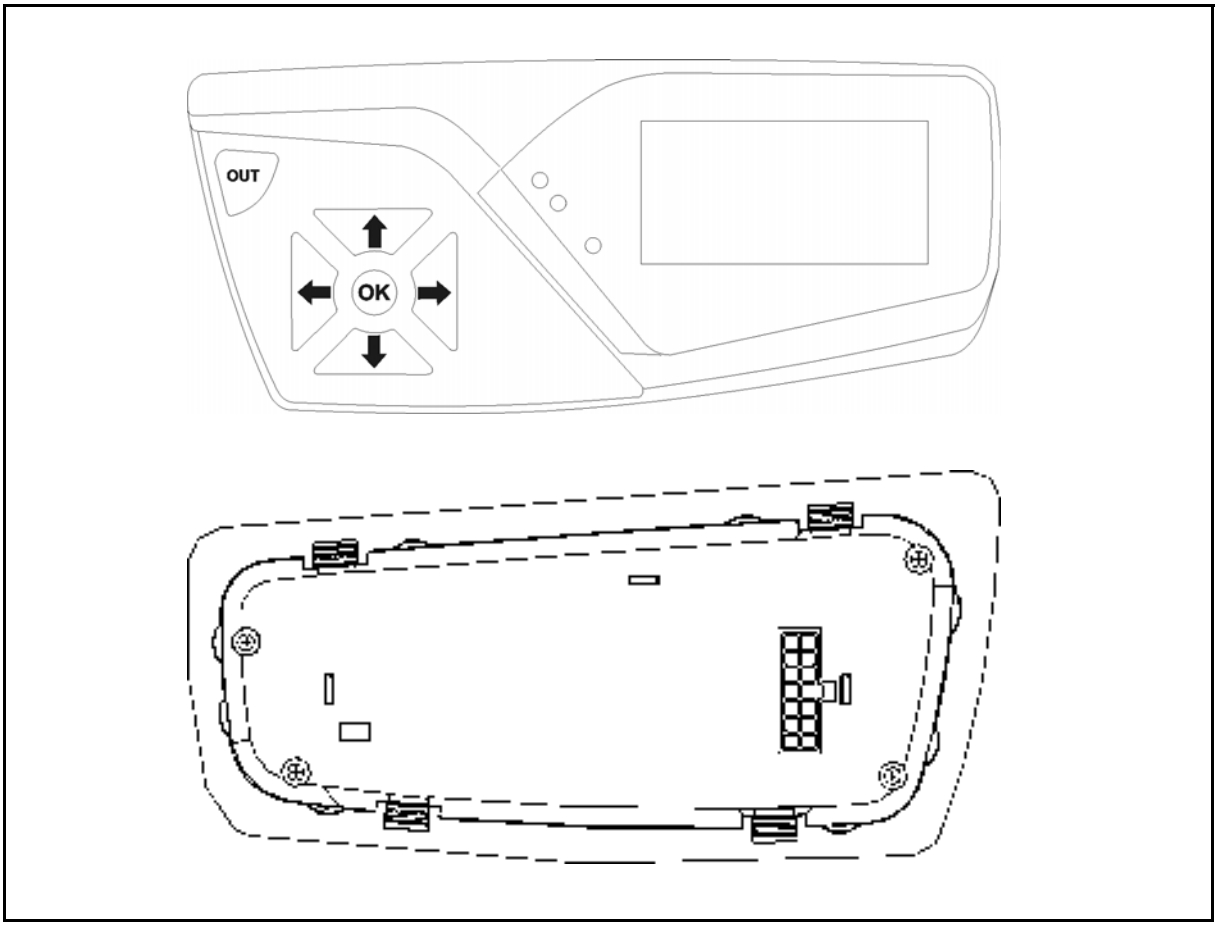

Basic conditions (battery plug connected, key switch ON).
See the reference names of the connectors in the electrical diagram.

CN (pin-colour) ⇔ CN (pin-colour) From ⇔ To		Description	Standard	Notes
J137 (1-AN)	CN1 (20-AN)	CAN-BUS HIGH		
J137 (2-HG)	CN1 (22-HG)	CAN-BUS LOW		
J137 (3-N)	J1 (-)	Battery negative input	GND	
J137 (4-CL)	J35 (5-CL)	Turtle button signal input		
J137 (5-RG)	J35 (6-RG)	LPH button signal input		
J137 (6-RA)	J4 (1-RA)	Brakes oil level signal input		
J132 (7-R04)	J9 (2-R04)	Key power input	+Vb	
J137 (8-AN)	J132 (3-AN)	CAN-BUS HIGH		
J137 (9-HG)	J132 (4-HG)	CAN-BUS LOW		
J137 (10)	---	Unused		
J137 (11)	---	Unused		
J137 (12)	---	Unused		
J137 (13-AB)	J71 (2-AB) J50 (9-AB)	Alarm buzzer negative	GND	
J137 (14-N)	---	Negative	GND	

CONTROL UNIT

MAIN CONTROL UNIT

	Traction Logic Unit ACE-2	**Lifting Logic Unit ACE-2**
Inverter for AC asynchronous 3-phase motors	√	√
Regenerative braking functions	√	√
Can-bus interface	√	√
Flash Memory	√	√
Digital control based upon a microcontroller	√	√
Power	24 V	24 V
Maximum current	350 A (RMS)	350 A (RMS)
Operating frequency	8 Khz	8 Khz
External temperature range	-30° C + 40° C	-30° C + 40° C
Maximum inverter temperature	75° C	75° C

CHECK TRACTION MOTOR PHASES BALANCING

When traveling or material handling operation seems abnormal, it is possible to accurately judge if the controller is functioning correctly or not by measuring the motor phase balancing.

Measuring method Procedure using a clamp amperometer

(1)Remove the rear plastic
(2)Jack up the front wheels
(3)Connect a clamp amperometer
(4)Operate the lifting lever
(5)Check the value of the current of each phase
(6)If the value of one phase is higher or lower respect the others it means that the system is not balanced and the motor is jerking. In this situation the logic unit must be replace

Measuring method, procedure using a multimeter

(1)Remove the rear plastic
(2)Jack up the front wheels
(3)Set the multemeter in Volt AC
(4)Connect the negative of the multemeter on the battery negative
(5)Connect the positive on one of the phase of the logic unit
(6)Check the value of the voltage of each phase
(7)If the value of one phase is higher or lower respect the others it means that the system is not balanced and the motor is jerking. In this situation the logic unit must be replace

In order to compare the value of the phases it is necessary to use the same tool and not different type of multimeters or clamp ammeters for each phases. This because the tool have different tolerance respect each others.

Measuring method, procedure using a multimeter

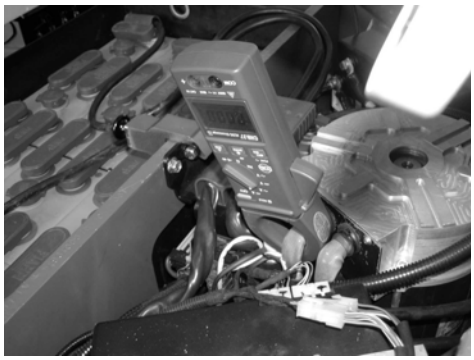

Measuring method Procedure using a clamp amperometer

CHECK LIFTING MOTOR PHASES BALANCING

Measuring method Procedure using a clamp amperometer

(1)Remove the rear plastic
(2)Jack up the front wheels
(3)Connect a clamp amperometer
(4)Operate the lifting lever
(5)Check the value of the current of each phase
(6)If the value of one phase is higher or lower respect the others it means that the system is not balanced and the motor is jerking. In this situation the logic unit must be replace

Measuring method, procedure using a multimeter

(1)Remove the rear plastic
(2)Jack up the front wheels.
(3)Set the multemeter in Volt AC
(4)Connect the negative of the multemeter on the battery negative
(5)Connect the positive on one of the phase of the logic unit
(6)Check the value of the voltage of each phase
(7)If the value of one phase is higher or lower respect the others it means that the system is not balanced and the motor is jerking. In this situation the logic unit must be replace

In order to compare the value of the phases it is necessary to use the same tool and not different type of multimeters or clamp ammeters for each phases. This because the tool have different tolerance respect each others.

REMOVAL • INSTALLATION

Before starting, disconnect the battery plug and measure the voltage across (+) and GND; if voltage is present, fit a 100Ω resistance between (+) and GND to discharge the condensers.

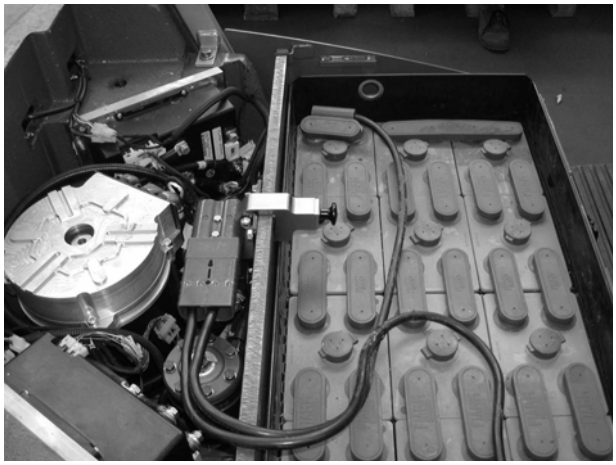

Removal procedure

1. Remove the boot
2. Move the seat forward
3. Move the lever of the mechanic control valve forward (only with mechanic control valve version)
4. Open the battery cover
5. Disconnect the battery plug
6. Disconnect the wiring and the power cables of the main controller
7. Remove the logic unit

Installation procedure

The reassembly procedure is the reverse of the disassembly procedure.

Whenever one of the logic units has been disassembled, rimember to restore the thermic transmission paste (Silicone Heat Transfer Compound Plus) layer between the logic unit and the heat radiant structure, the counterweight. This white colour product consisting of powdered metal oxides (ceramic) compounded in a silicone oil base. It must be spreaded in a thiny film on one of the two assembly surfaces and then you can proceed to the reassembly.

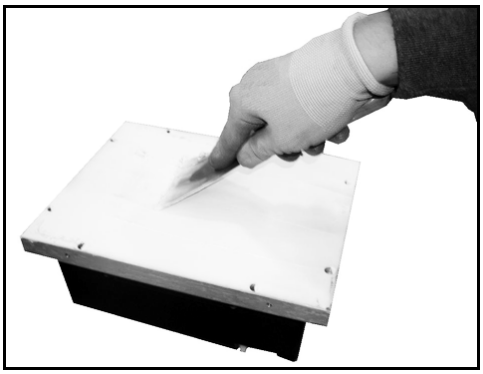

Remarks:
For thermic transmission paste (Silicone Heat Transfer Compound Plus) see Service Tools List

I/O CONTROL BOARD

The card is located on the left side of the truck under the footboard. It controls and converts analogue signals to digital signals and vice versa.

REMOVAL • INSTALLATION

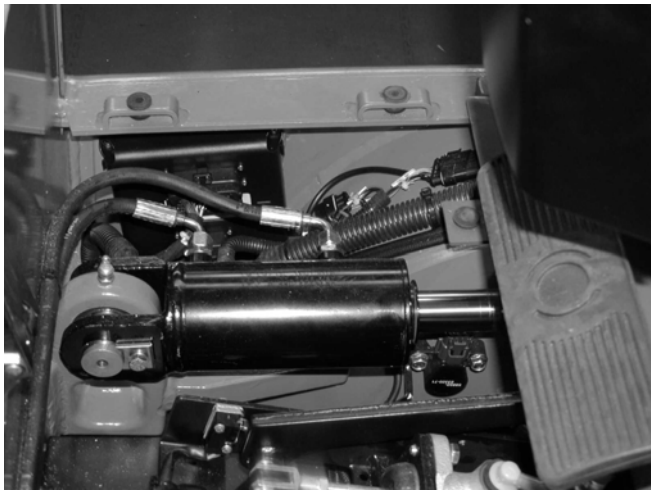

Removal procedure

1. Remove the footboard
2. Disconnect the connectors on the I/O control board
3. Remove the fixing screws
4. Replace the card

Installation procedure

The reassembly procedure is the reverse of the disassembly procedure.

MHYRIO LOGIC UNIT

OPERATIONAL FEATURES

It works to 24 V and it is located on the left side of the truck below the left tilting cylinder. The Mhyrio card receives the digital inputs from the CAN and it converts them into analogue signals to control the solenoid valves.

REMOVAL • INSTALLATION

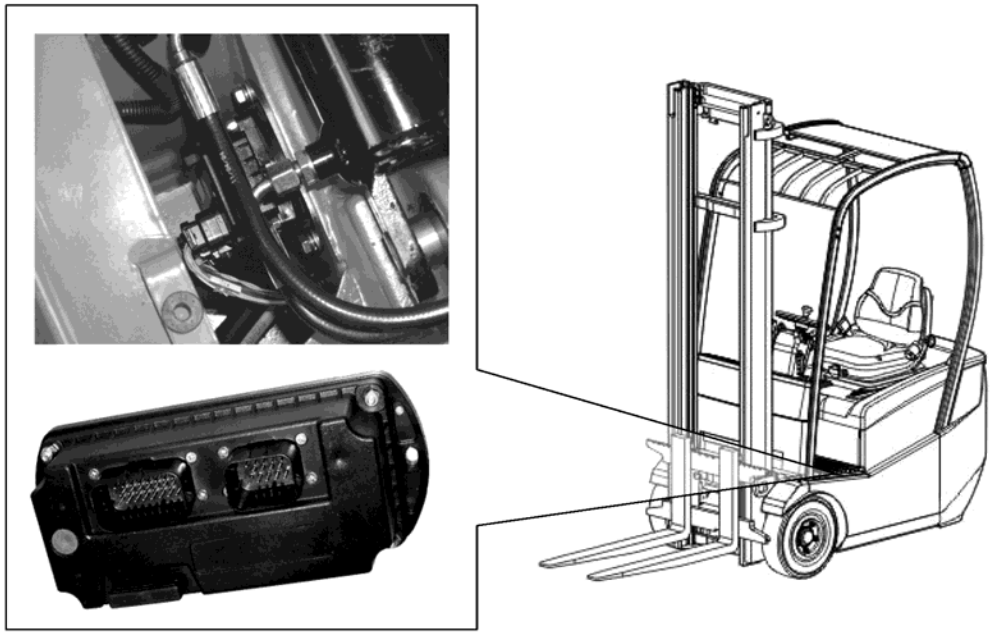

Removal procedure

1. Lift the battery cover
2. Disconnect the battery plug
3. Remove the footboard
4. Disconnect the wiring loom
5. Remove the fixing screws
6. Remove Mhyrio control valve

Installation procedure

The reassembly procedure is the reverse of the disassembly procedure.

CONTACTOR GROUP

REMOVAL • INSTALLATION

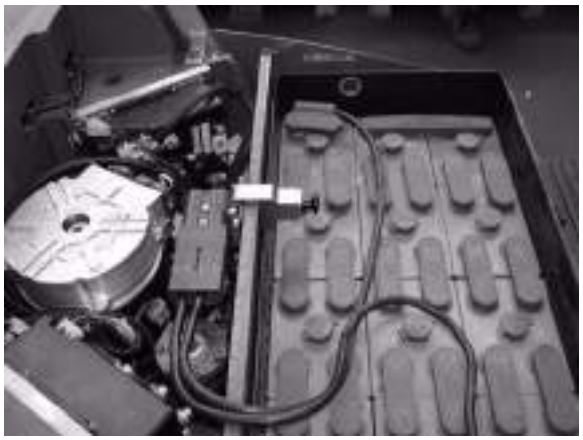

Removal procedure

1. Remove the boot
2. Move the seat forward
3. Move the lever of the mechanic control valve forward (only with mechanic control valve version)
4. Open the battery cover
5. Disconnect the battery
6. Remove the two fixing screws of the battery connector group
7. Disconnect the power cables from the contactors
8. Remove the contactors

Installation procedure

The reassembly procedure is the reverse of the disassembly procedure.

INSPECTION

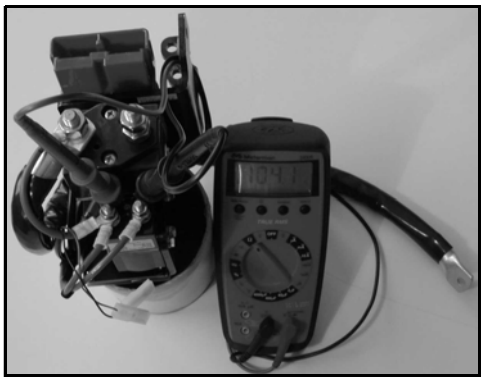

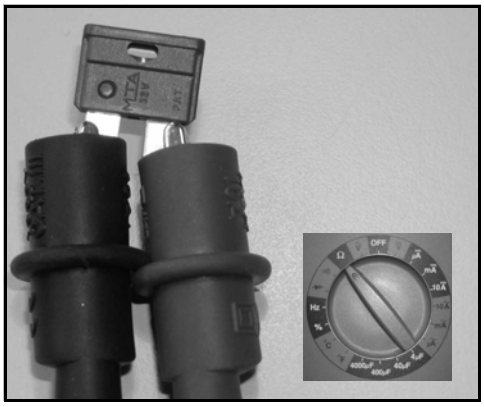

1. MB (power supply contactor)
   Inspection method.
   Disconnect the connector from the wiring harness and measure the resistance of the coil.

Part to be inspected	Measurement measurament	Standard	Tester range:
Coil CT1	Both coil terminals	Approx. 104 Ω	Ω × 1
Coil CT2	Both coil terminals	Approx. 45 Ω	Ω × 1

2. FUSE
   Inspection method.
   Disconnect the fuse and measure the insulation resistance

Part to be inspected	Measurement measurament	Standard	Tester range:
FUSES	Both fuse terminals	0 Ω	Ω × 1

DASHBOARD

If the cause of trouble is in the display, measure the voltage at connector to whom voltage is applied.

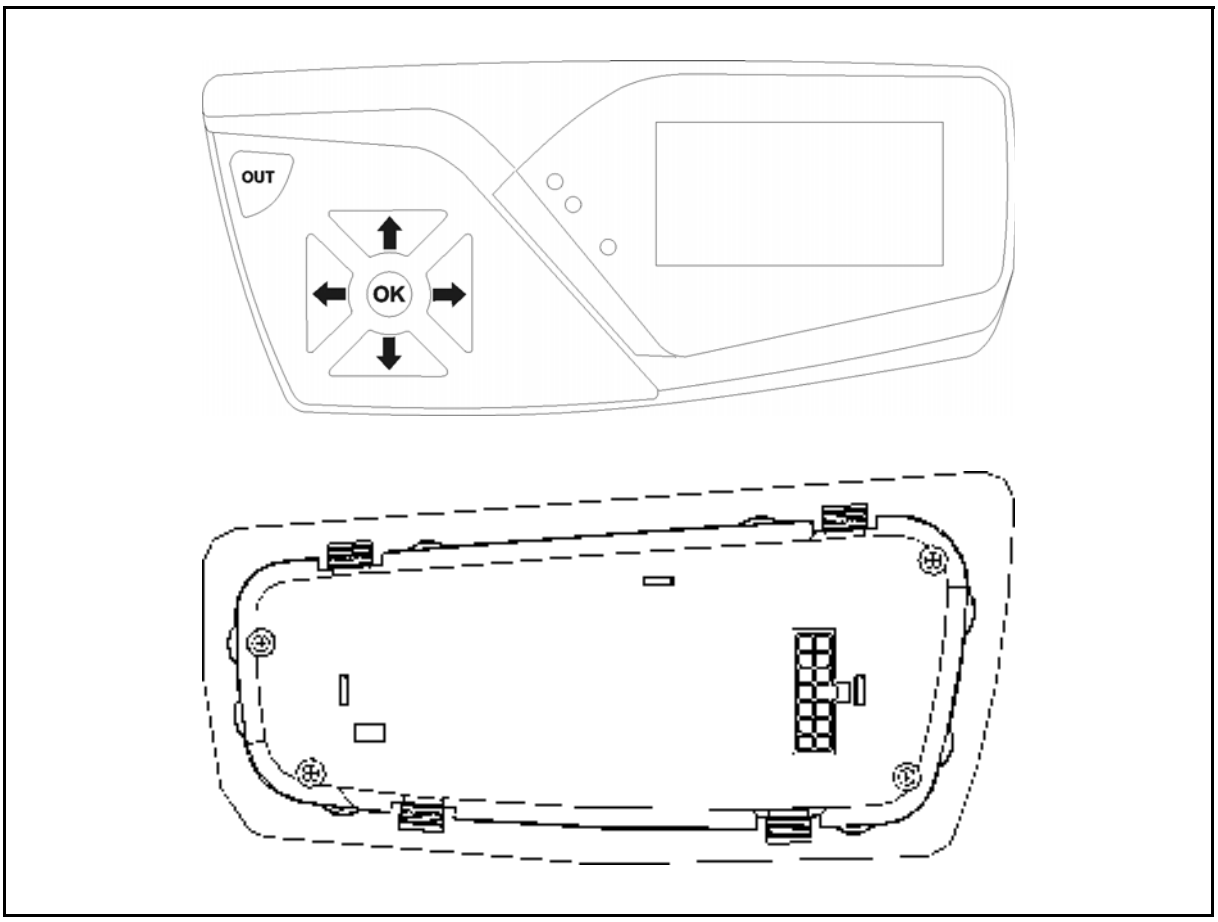

J137 connector basic condition (Battery plug connected)

CN (pin-colour) Û CN (pin-colour) From ⇔ To		Description	Standard	Notes
J137 (9-N)	J1 (-)	GND from battery	GND	
P137 (8-R3)	J1 (+)	+V from battery	+V	

REMOVAL • INSTALLATION

Removal procedure

1. Park the vehicle on a level surface and apply the parking brake
2. Turn off the truck
3. Open the compartment and disconnect the battery
4. Remove the front board
5. Disconnect the wiring harness fromthe dashborad
6. Remove the display

Installation procedure

The reassembly procedure is the reverse of the disassembly procedure.

ARMREST CARD

COMPONENTS

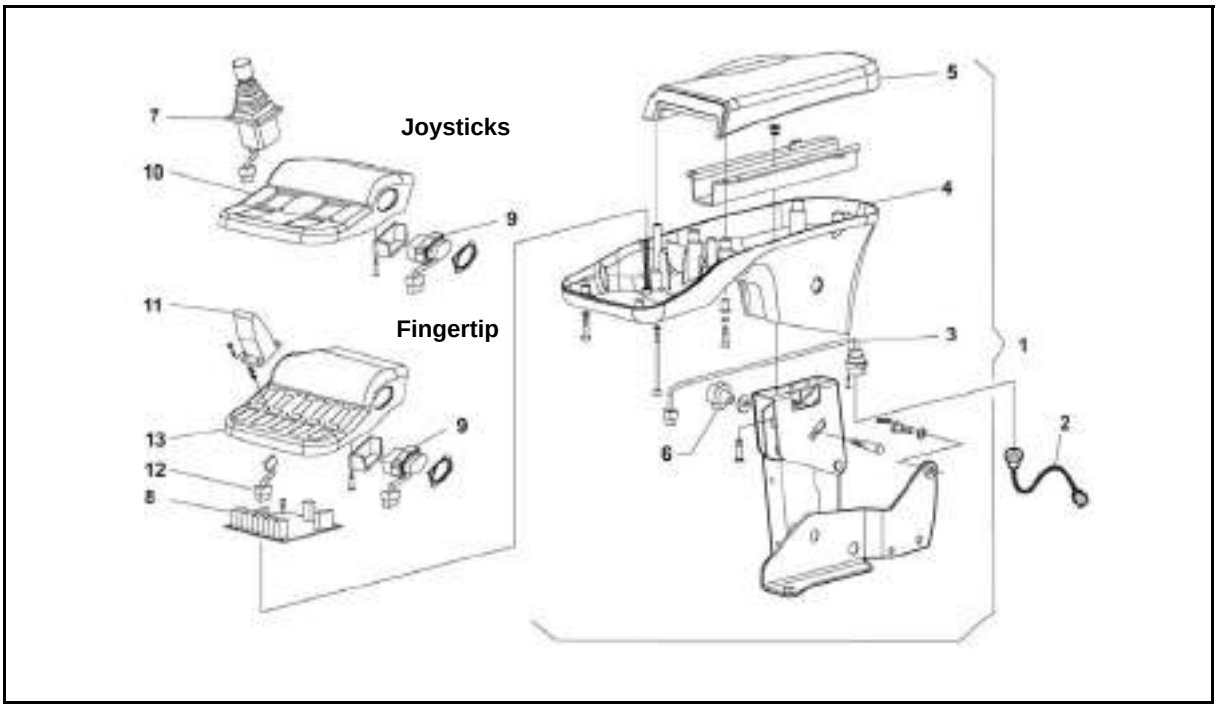

1	Armrest	8	Armrest card
2	Wiring	9	Direction switch
3	Internal cabling	10	Guard
4	Guard	11	Finger-tip
5	Cushion	12	Wiring
6	Knob	13	Guard
7	Joystick		

REMOVAL • INSTALLATION

Removal procedure

1. Park the vehicle on a level surface and apply the parking brake
2. Turn off the truck
3. Open the compartment and disconnect the battery
4. Disconnect the wiring in the rear of the armrest **[Point 1]**
5. Remove the arm pad
6. Remove the fixing screws located under the armrest **[Point 2]**
7. Open the armrest
8. Disconnect the cabling and remove the 4 bolts securing the armrest card **[Point 3]**
9. Remove the armrest card

Installation procedure

The reassembly procedure is the reverse of the disassembly procedure.

Point Operations

[Point 1]
Disassembly:
Disconnect wiring **(A)**, placed in the armrest back part

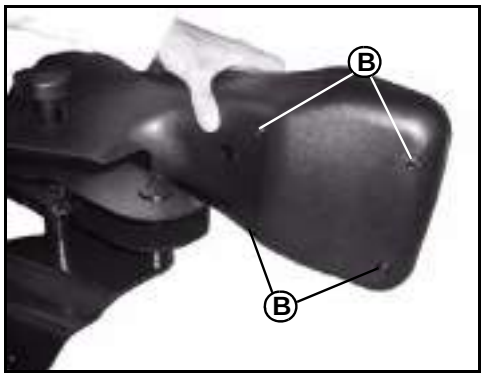

[Point 2]
Disassembly:
Remove the 4 fixing screws **(B)** placed in the armrest lower side

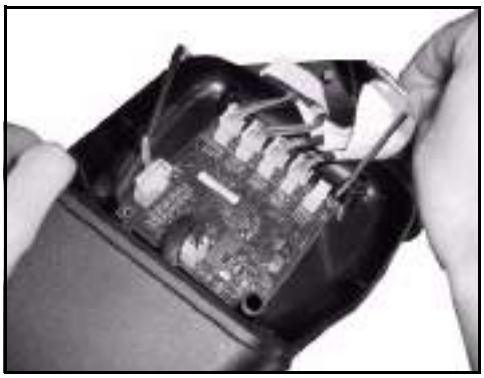

[Point 3]
Disassembly:
Disconnect armrest board wirings and remove the armrest board 4 fixing screws

FUSE 24 VOLT

This fuse box is situated under the dashboard and feeds only the optional equipments.

1. J90 connector for auxiliary wiring feeding
2. Feeding fuses positive connection bars
3. Connector for direction indicator intermittence

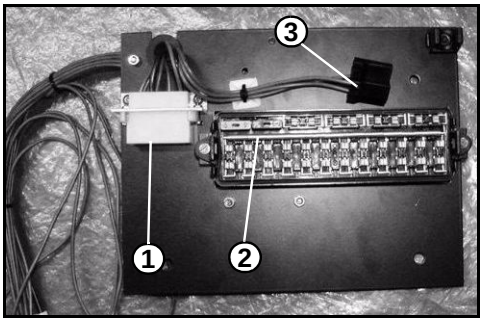

Fuses	Capacity (A)	Wire colour	Destination
FA (1)			unused
FB (2)	7.5 A	orange	direction lights
FC (3)	5 A	yellow	rotating beacon
FD (4)	7.5 A	purple	front and rear wiper
FE (5)	5 A	pink	Directionindicator
FF (6)	7.5 A	black/blue	heating
FG (7)	7.5 A	green	front and rear window defroster
FH (8)	7.5 A	white	work spotlights
FI (9)			unused
FL (10)	5 A	orange/white	car radio
FM(11)			unused

J90 = 24V FUSES CONNECTOR

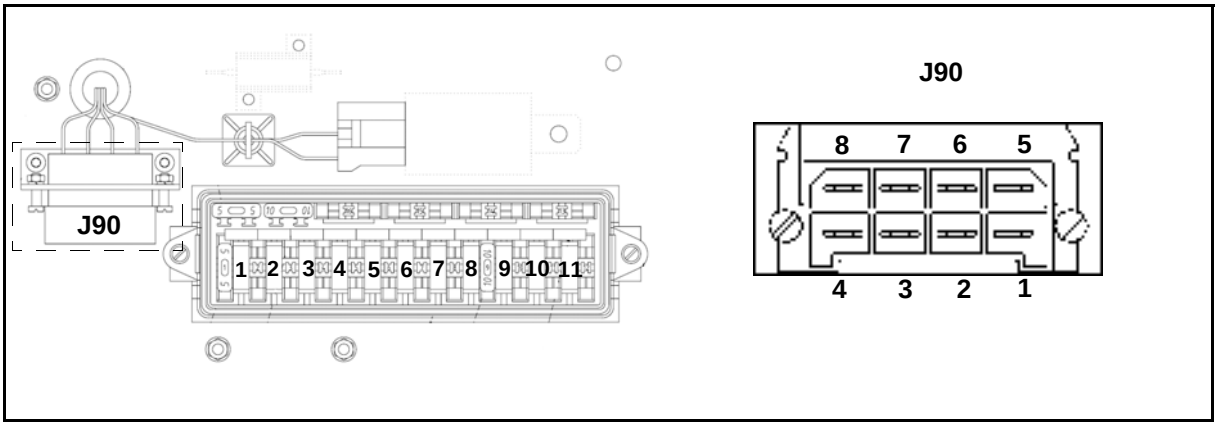

Pin	Wire	Description	Standard
1	red	Fuses supply	+ 24V
2	red-orange	Dimmed headlights + overall lights	+ 24V
3	red-light blue	Left direction light	+ 24V
4	red-grey	Right direction light	+ 24V
5	–	Unused	–
6	–	Unused	–
7	blue	Negative	GND
8	brown	Unused	–

ACCELERATOR POTENTIOMETER ADJUSTMENT

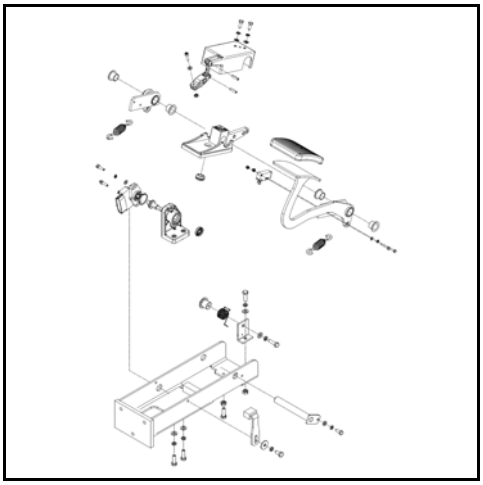

1. Check the ON/OFF condition of the switch
   1.1. SW8 (single pedal)
   1.2. SW4 - SW5 (double pedal)

Measurement terminals		Status
Standard:	Pedal not operated:	∞ Ω
	Pedal operated	Continuity

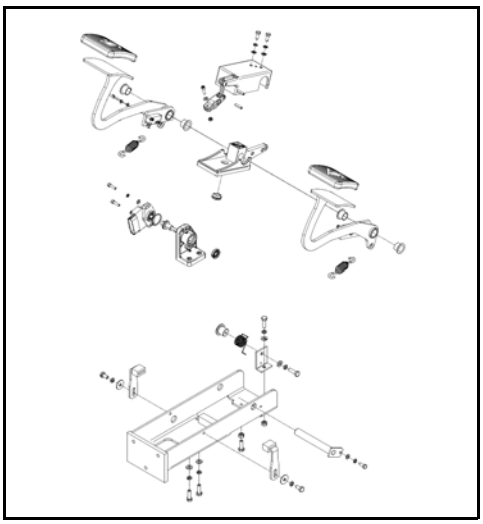

2. Adjustment of Accelerator Potentiometer (P2)
   Installation
   (1) Before installing a new traction potentiometer it is suggest to check it with an analogue multimeter. Move slowly the wiper until the maximum stroke and in the same time check if the multimeter increases or decreases the value proportionally with the movement.
   (2) Install the potentiometer and connect it to the wiring loom of the machine.
   (3) After closing the microswitch the voltage on the wiper of the potentiometer has to be approximately 1.6V and 3.2V to the maximum stroke. This measure is referred to its negative.
   (4) Once the potentiometer is set, carry out the traction potentiometer acquisition (see chapter 3: Display).
   (5) After adjusting the switch ON/OFF operation, apply yellow paint to the head of a set screw.

Measurement terminals		Status
Standard:	J32 (1-AG)	5V
	J32 (2-HN)	GND
	J32 (3-V)	1.6V - 3.2V

ADJUSTING THE FOOT BRAKE SWITCH

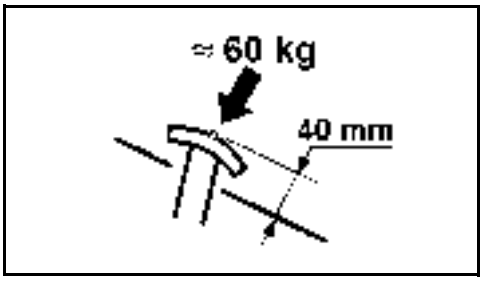

1. Adjust the brake pedal play **(approx. 1mm)**.
2. Adjust brake rod length.
3. Check the continuity of the speed reduction switch
   Standard: Not operated: OFF (∞ Ω)
   operated: ON (0 Ω)

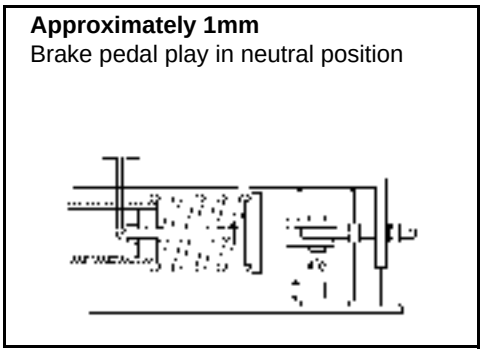

Approximately 1mm
Brake pedal play in neutral position

4. Check that the microswitch for the regenerative brake turns ON (OFF) when the brake pedal is depressed from the neutral position without any play.
   Standard: Not operated: OFF (0 Ω)
   operated: ON (∞ Ω)

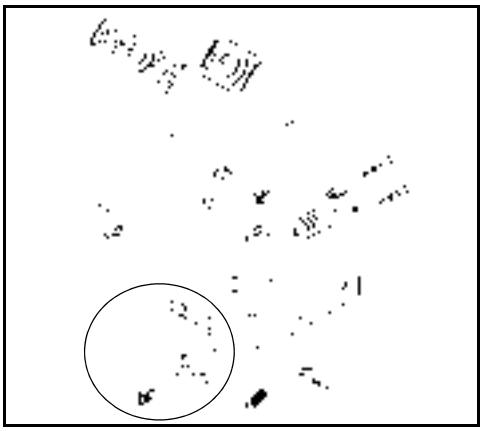

5. If the standard is not met, adjust the microswitch position.

PARKING BRAKE SWITCH ADJUSTMENT

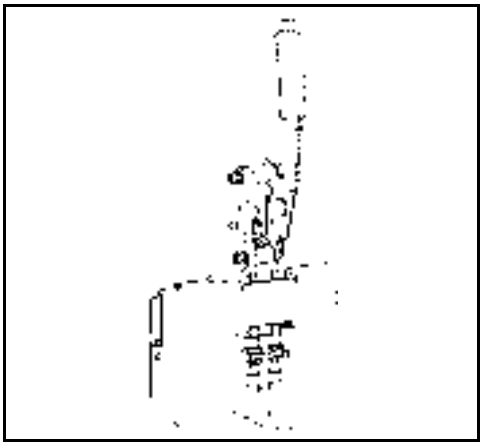

1. Check the ON/OFF operation of the parking brake limit switch
   Standard: Lever returned to original position:
   ON (0 Ω)
   Lever pulled: OFF (∞ Ω)
2. If the standard is not met, adjust the microswitch installation location.

LIFTING POTENTIOMETER ADJUSTMENT

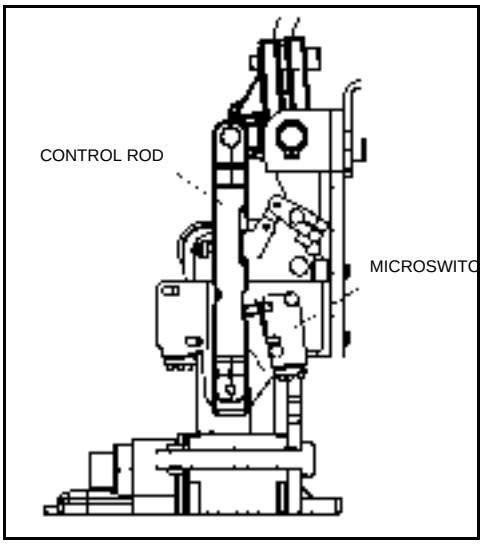

1. Check the ON/OFF condition of the switch

Measurement terminals		Status
Standard:	Neutral position of the lever	∞ Ω
	Lever pulled	Continuity

Microswitch adjustment:
After the installation perform the following adjustments:

2. Keep the microswitch in rest position as shown in the drawing according to the following points:
   - The castor of the microswitch has to be in contact with the surface of the command rod
   - The microswitch lever has to be in contact with the push button of the microswitch, without activating it

Tighten the microswitch in order to have the possibility to move it on the button hole of the support.

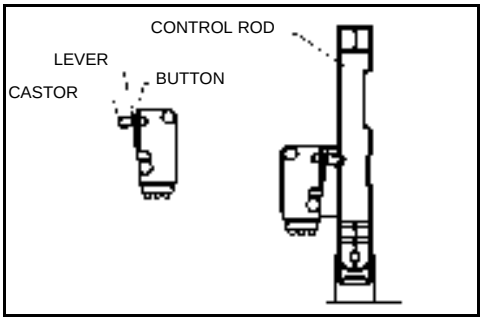

3. Adjust the microswitch position in order to activate it to the minimum stroke of the microswitch lever and by releasing the latter the microswitch has to return in rest position. The activation of the microswitch could be detected:
   - by eyes (by checking the angular stroke on the microswitch lever)
   - by ears (by listening to the closing of the microswitch contacts)
   - by multimeter (by checking the microswitch output signals)

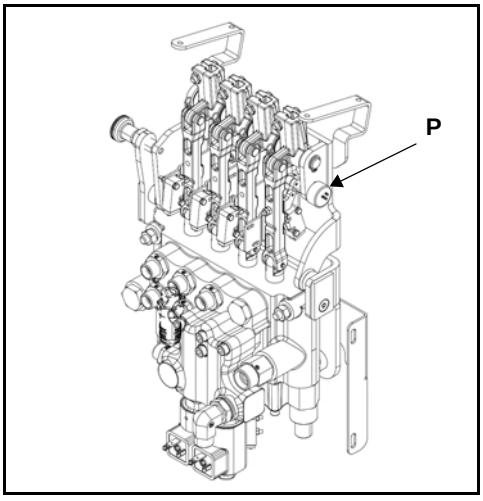

4. Tighten the microswitch screws with a tightening torque of 0.39--0.59 Nm

Adjustment (lifting potentiometer **P**):
after installation, adjust the lifting potentiometer

- assemble the potentiometer on the contol valve;
- connect the analog multimeter, set to at least 10 kOhm, to the potentiometer connector pins in the following way: the red terminal (+) to pin 2, the black terminal (-) to pin 3
- move the lifting lever until the lifting microswitch is released; the value you must read on the multimeter is 5 kOhm
- After the installation carry out the lifting potentiometer acquisition (see chapter 3: Display)

NECESSARY ADJUSTMENTS AFTER A HARDWARE COMPONENT REPLACED

I/O BOARD

Acquisition	Serial number (LEARN SERIAL NUMBER)
	Accelerator potentiometer (LEARN TRAC POT)
	Lifting potentiometer (only in the mechanic distributor version) (LEARN LIFT POT)
	Balanced pedal configuration (SWAYING PEDAL)

TRACTION LOGIC UNIT

Acquisition	Serial number (LEARN SERIAL NUMBER)
	Steering potentiometer (SET STEER ZERO/SET STEER LEFT/SET STEER RIGHT)
	GEL battery (BDI GEL)

LIFTING LOGIC UNIT

Acquisition	Serial number (LEARN SERIAL NUMBER)

ARMREST CARD

Acquisition	Serial number (LEARN SERIAL NUMBER)

DASHBOARD

Acquisition	Date and hour regulation
	Serial number (LEARN SERIAL NUMBER)
	GEL battery (BDI GEL)
	Start icon (START ICON)

MHYRIO

Acquisition	Serial number (LEARN SERIAL NUMBER)

DISPLAY

Page

MULTIFUNCTION DISPLAY 3-2
GENERAL 3-2
MAPS FOR USING THE DASHBOARD 3-4
USER MENU 3-4
USER MENU MAP 3-5
USER MENU DESCRIPTION 3-6
USER MENU 3-7
HOUR METER 3-8
TRIP 3-8
CLOCK 3-9
ALARMS 3-10
DISPLAY SETTING 3-11
MAPS FOR USING THE DASHBOARD 3-14
SERVICE MENU DESCRIPTION 3-15
SERVICE MENU MAP 3-16
SERVICE MENU FUNCTIONS 3-17
SOFT VERS 3-18
SOFTWARE VERSION MENU MAP 3-19
PARAM CHANGE 3-20
PARAM CHANGE ADVANCED 3-21
“INCORRECT START“ MANAGEMENT 3-64

MULTIFUNCTION DISPLAY

The multi-function instrument panel helps operators to identify various information easily by changing screens depending on the vehicle conditions.

GENERAL

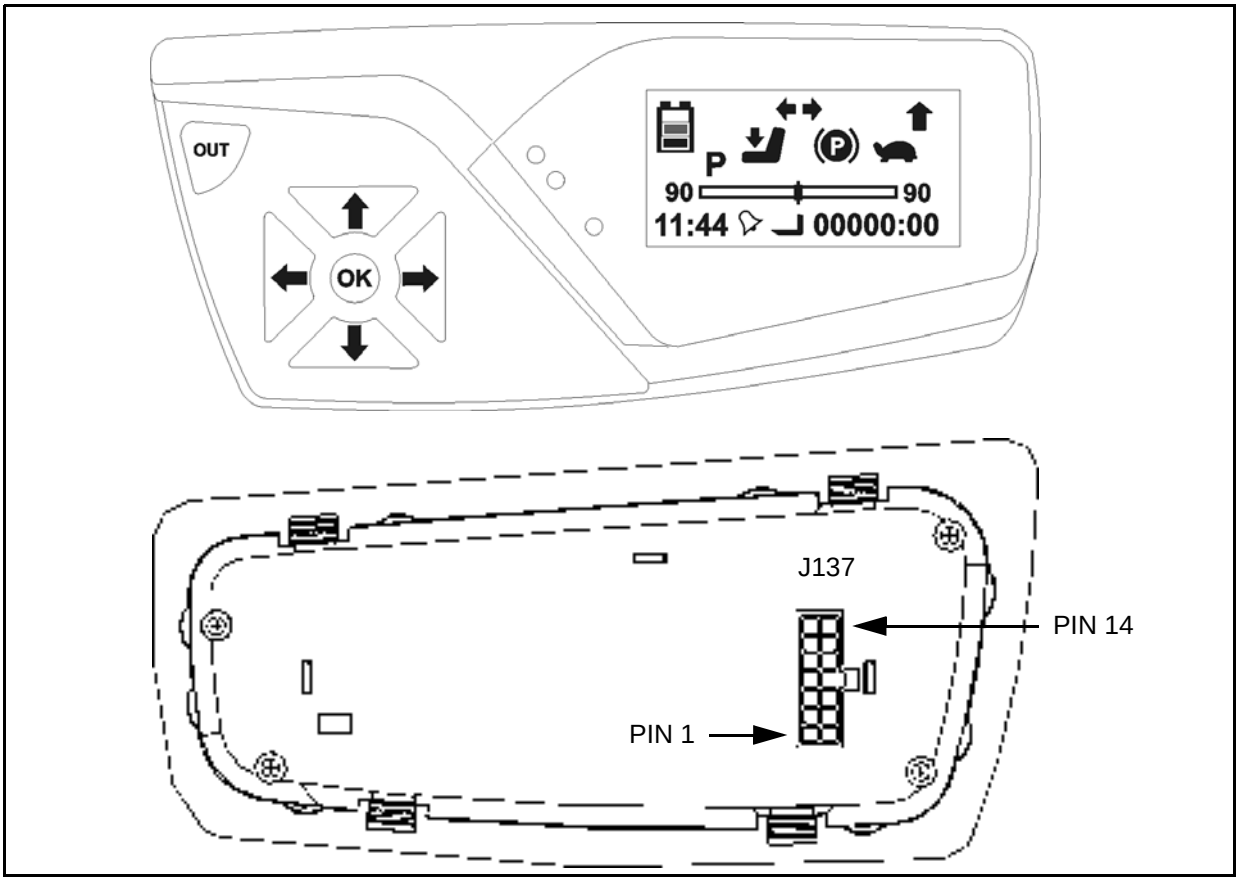

Icon	Description
	Flat battery indicator It flashes when battery drops below 20% charge
	Parking brake indicator enabled
	Dead man device indicator: The indicator comes ON when the driver leaves the driving seat without switching OFF the truck; under these conditions, the traction and lifting movements are disabled.
00000:00	Adjustable electronic hour meter: it counts truck working hours. It shows the working hours and hour fractions
	Speed reduction indicator

Icon	Description
	Selected gear indicator
11:44	Hour indicator
	Timer indicator
LPH	Selected program indicator
	Steering direction indicator
	Hour meter mode indicators lifting motor, traction motor or key switch
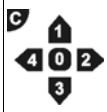	Password: The option activation button permits to digit the access password
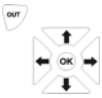	Board: it permits to navigate between the menus
	Brakes liquid level warning light: Braking system fault. The warning appears when the brake system pressure is insufficient to release the brakes
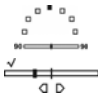	Steering direction indication: indicates the steering wheel direction

MAPS FOR USING THE DASHBOARD

USER MENU

USER MENU MAP

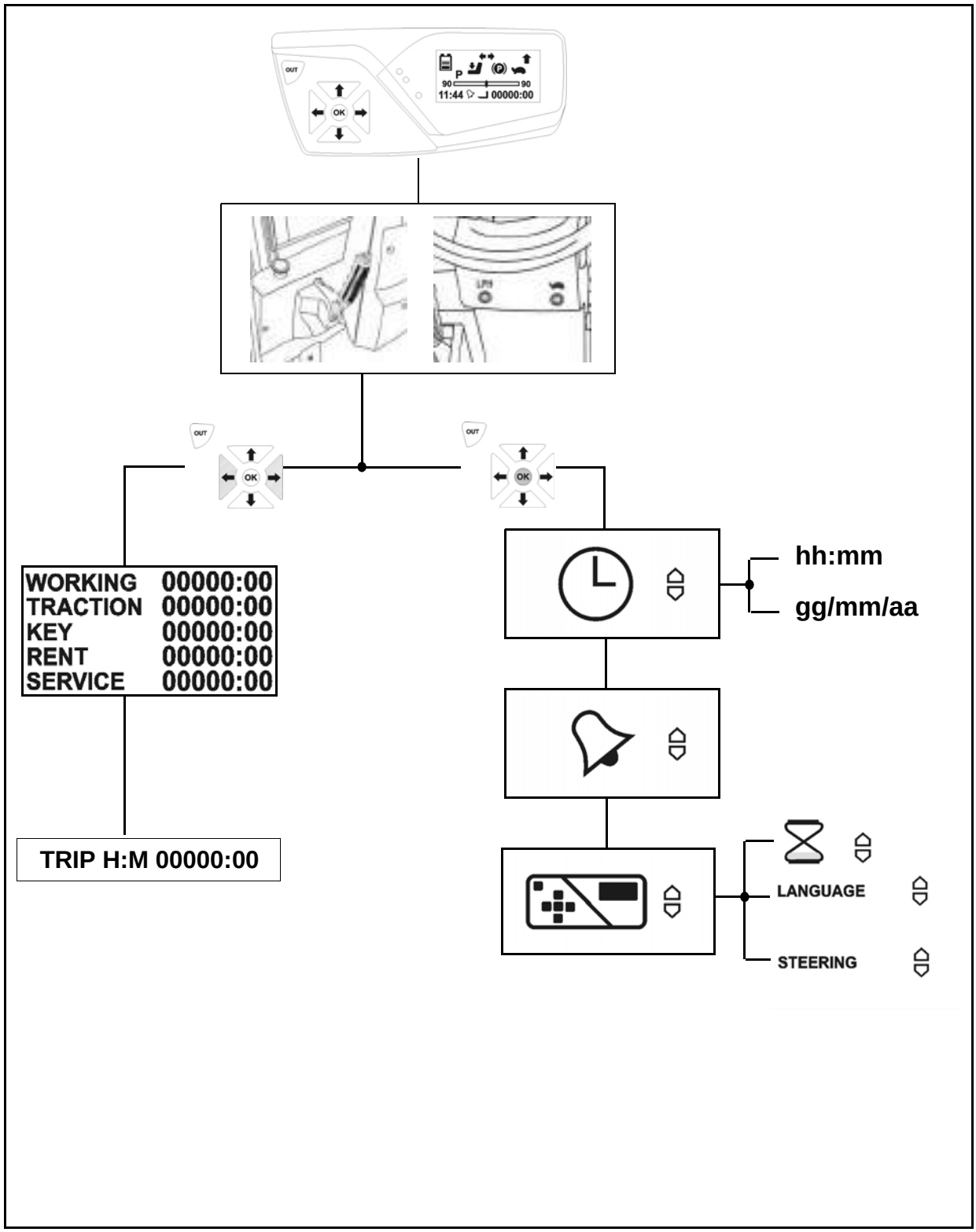

USER MENU DESCRIPTION

The "user" menu is accessible to any operator, and allows to modify the parameters series contained in the chart USER MENU.

USER MENU PASSWORD

Notes on password insertion

1. Make sure to operate on the display membrane buttons using fingers only. Sharped or pointed tools can damage the buttons
2. If, during the password insertion, an error is committed, turn off the vehicle with the key and restart from the beginning. If the menu of the hidden functions doesn't appear after a few attempts, the system could be defective.

USER MENU PASSWORD INSERTION PROCEDURE

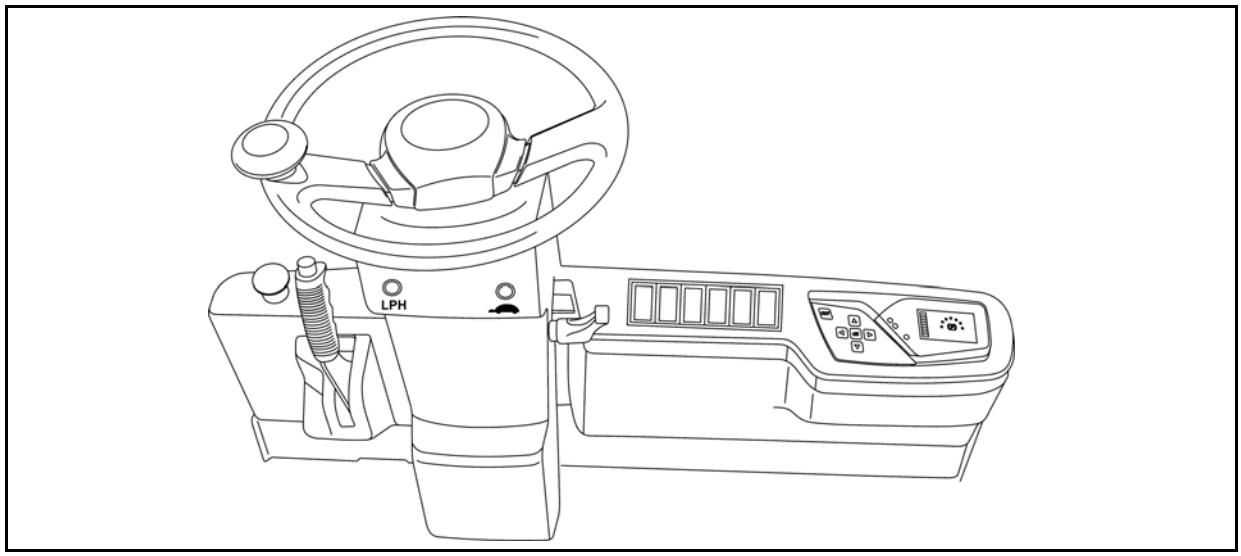

Procedure	Operations	Vehicle reactions
1	Turn the truck on	
2	Pull on the parking brake	
3	Press the LPH and turtle keys at the same time	Short acoustic warning
4	Press OK for a few seconds to enter the USER menu	
	Press ➡ for a few seconds to enter the HOUR METER menu	

USER MENU

Menu	Description	Notes
HOUR METER	The display shows the hours of work done: WORKING: lifting motor working TRACTION: traction motor working KEY: truck on (inserted key) RENT: rental time counter SERVICE: truck working since the last service intervention	Unless otherwise specified, the hour counter counts the lifting motor operation and can be reset by the service staff
TRIP	It is a partial hour meter on the lifting motor use	Can be reset by the operator seconds
CLOCK	It permits to modify hours and date	
ALARMS	It allows, if enabled, to set an alarm as memo	The active alarm is indicated on the display by a specific warning light
DISPLAY SETTING	It permits to modify: - the hour meter shows on the display: None: nothing displayed Key: the key working hours Working: the pump working hours Traction: the traction working hours - the language visualized by the “user“ menu (5 languages: it, en, fr, es, de) - visualization of the direction wheels position (linear or radial modality)	

HOUR METER

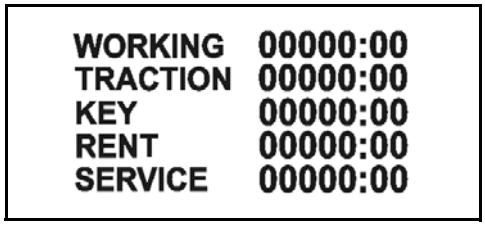

Enter the user menu
[see USER MENU PASSWORD INSERTION PROCEDURE paragraph]

Press ⬆ or ⬇ to view the information referred to the hour meter

To exit the menu use lateral flowing arrows

TRIP

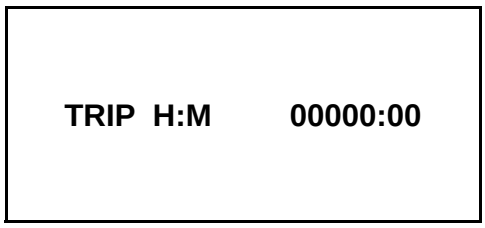

Press ⬇ to view the information referred to the trip

Press **OK** to reset the hours count

To exit the menu use lateral flowing arrows

CLOCK

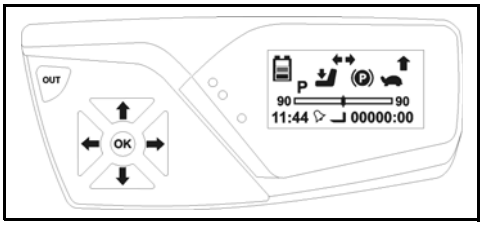

Enter the user menu
[see USER MENU PASSWORD INSERTION PROCEDURE paragraph]

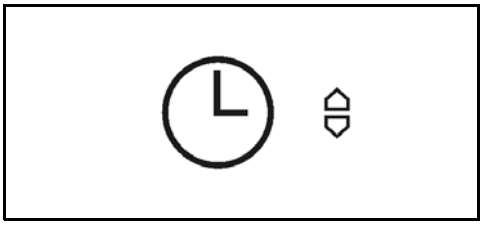

Press **OK** to enter into the clock menu

Remarks:
The clock icon flashes

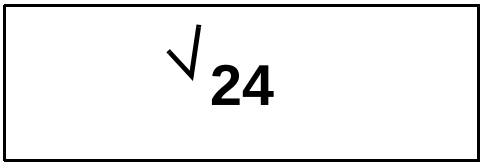

Press ⬆ or ⬇ to modify the setting.
Press **OK** to confirm.

Remarks:
The selected modality has a flag beside

Use the flowing arrows to set the hours

Press OK to confirm

Use the scroll arrows to set the date

Press **OK** to confirm

Press **OUT** to exit the menu

Remarks:
To change the YEAR the programmer must be connected to the truck CAN-BUS; otherwise it is possible only to change the month and day

ALARMS

SETTING

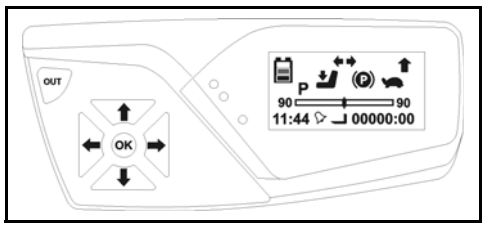

Enter the user menu
[see USER MENU PASSWORD INSERTION PROCEDURE paragraph]

Use ⬇ to reach the clock alarm menu

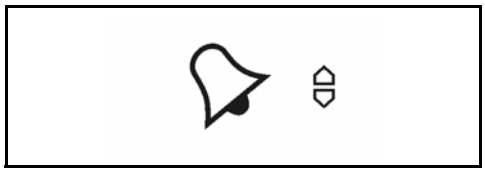

Press **OK** to confirm

Remarks:
The clock icon flashes

hh:mm

Press **OK** to confirm

Use the flowing arrows to set the hours

Press **OK** to confirm

gg/mm/aa

Use the scroll arrows to set the date

Press **OK** to confirm

Press **OUT** to exit the menu

DEACTIVATION

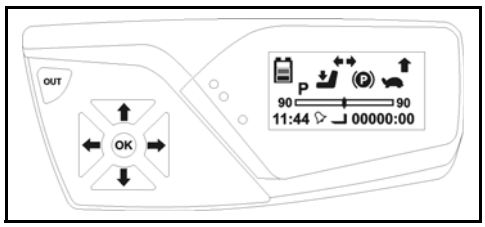

Enter the user menu
[see USER MENU PASSWORD INSERTION PROCEDURE paragraph]

Use ⬇ to reach the clock alarm menu

Press **OK** to confirm

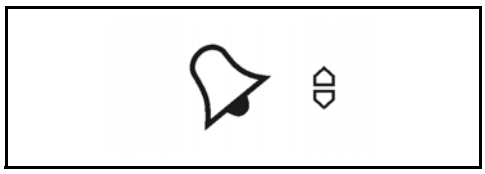

Press ⬆ or ⬇ to disable the alarm

Remarks:
The clock icon flashes

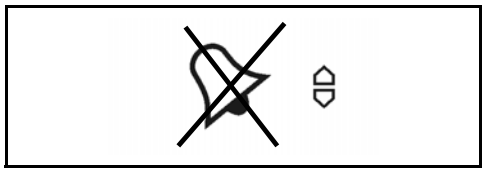

Press **OK** to confirm

Press **OUT** to exit the menu

DISPLAY SETTING

TRUCK HOUR METER

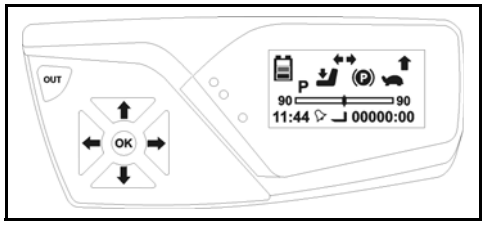

Enter the user menu
[see USER MENU PASSWORD INSERTION PROCEDURE paragraph]

Use ⬇ to reach the display setting menu

Press **OK** to confirm

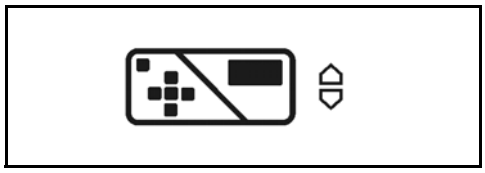

Press **OK** to confirm

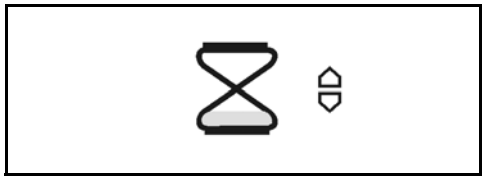

Press **OK** to confirm

Use the scroll arrows to set the hour meter modality viewed on the display.

Press **OK** to confirm

Press **OUT** to exit the menu

LANGUAGE

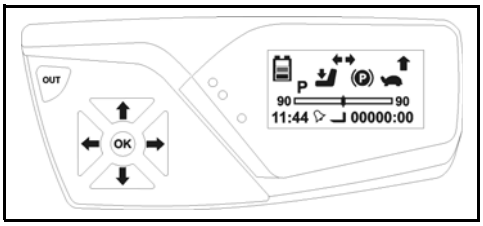

Enter the user menu
[see USER MENU PASSWORD INSERTION PROCEDURE paragraph]

Use ⬇ to reach the display setting menu

Press **OK** to confirm

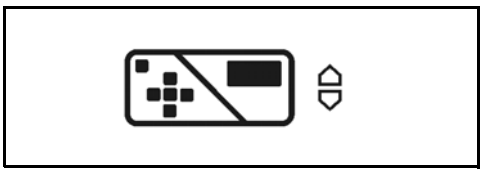

Use ⬇ to reach the language setting menu

Press **OK** to confirm

Use ⬇ to select the desired language

Press **OK** to confirm

Press **OUT** to exit the menu

STEERING DIRECTION

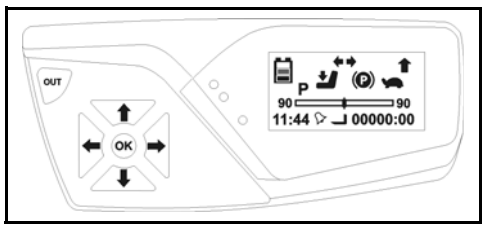

Enter the user menu
[see USER MENU PASSWORD INSERTION PROCEDURE paragraph]

Use ⬇ to reach the display setting menu

Press **OK** to confirm

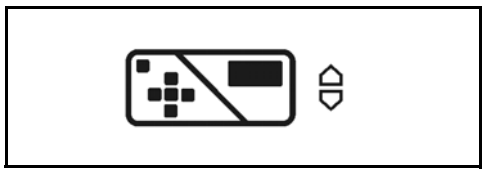

Use ⬇ to reach the steering direction setting menu

Press **OK** to confirm

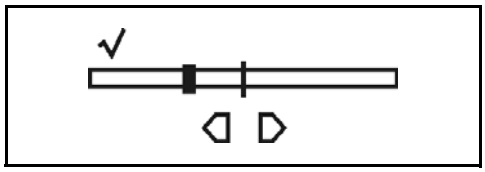

Use ⬇ to select the desired visualization.

Press **OK** to confirm

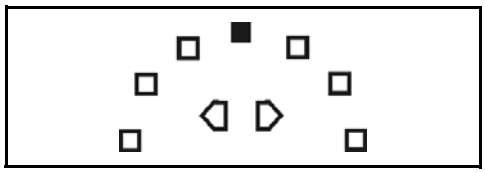

Press **OUT** to exit the menu

MAPS FOR USING THE DASHBOARD

SERVICE MENU

SERVICE MENU DESCRIPTION

The "service" menu allows to enable all necessary functions for assistance, maintenance and rental activities.

The access to this menu is for authorized personnel only.

SERVICE MENU PASSWORD

Notes on password insertion

1. Make sure to operate on the display membrane buttons using fingers only. The use of sharp or pointed tools could damage the buttons.
2. If, during the password entry, an error is committed, turn off the vehicle with the key and start from the beginning. If the menu of the hidden functions doesn't appear after a few attempts, the system could be defective.
3. If the system does not recognize the current year password, check the date set in the CLOCK menu

SERVICE MENU PASSWORD INSERTION PROCEDURE

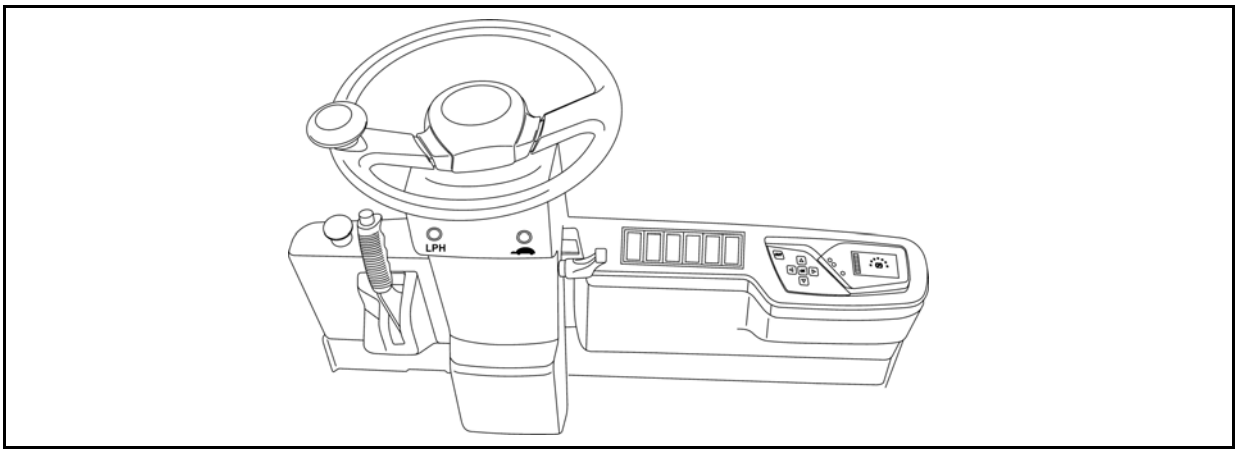

Procedure	Operations	Vehicle reactions
1	Turn the truck on	
2	Pull on the parking brake	
3	Press the LPH and turtle keys at the same time	Short acoustic warning
4	Enter the combination as shown in the following sequence 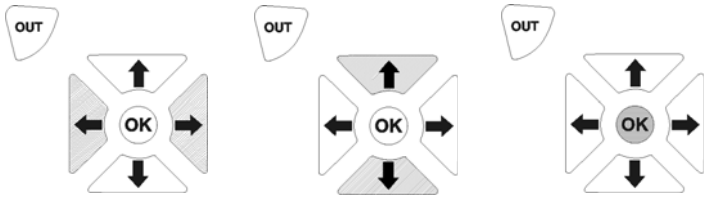	Short acoustic warning
5	Enter the password (the password changes automatically each year on January 1st): The password is composed by a sequence of numbers: the correspondence between the keyboard buttons and the numbers composing the password is available on the display. The OUT button, indicated as OFF, in the display, allows to cancel the last number typed by each pressure	

SERVICE MENU MAP

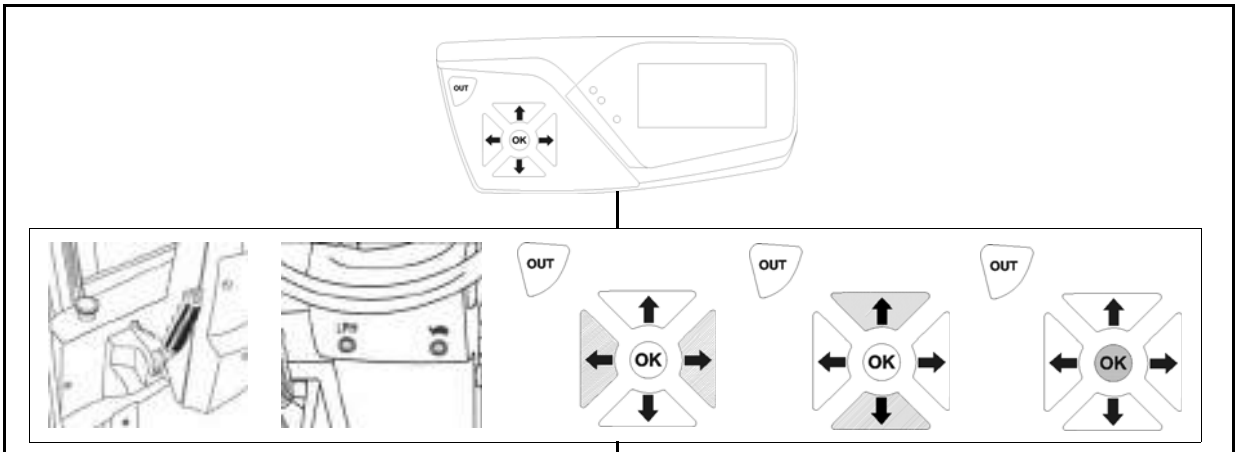

PLEASE INSERT SERV. PASSWORD

- SOFT VERS
- PARAM CHANGE
- TRUCK CONF
- SERVICE RENT
- PSW MODIFY
- TESTER
- ALARMS
- LEARNING
- DEFAULT RST

SERVICE MENU FUNCTIONS

Menu	Description
MENU SOFT VERS ◁ ▷	**SOFTWARE VERSION** Visualizes the software version of boards and logic units
MENU PARAM CHANGE ◁ ▷	**PARAMETER CHANGE** Modify the selected program parameters
MENU TRUCK CONF ◁ ▷	**TRUCK CONFIGURATION** Modify the configuration parameters
MENU SERVICE RENT ◁ ▷	**SERVICE RENT** It allows to set up the programmed maintenance menu and rent menu
MENU PSW MODIFY ◁ ▷	**MODIFY PASSWORD** It allows to modify the passwords or to restore default ones
MENU TESTER ◁ ▷	**TESTER** Visualizes analog and digital values to analyze the truck status
MENU ALARMS ◁ ▷	**ALARMS** Memorizes truck alarm codes (maximum 20 alarms). This function visualizes alarms in real time
MENU LEARNING ◁ ▷	**LEARNING** Used to set the truck serial number, to acquire the status of the potentiometers and execute the ADJUST BATTERY
MENU DEFAULT RST ◁ ▷	**DEFAULT RESTART** It allows to restore the default parameters of the truck

SOFT VERS

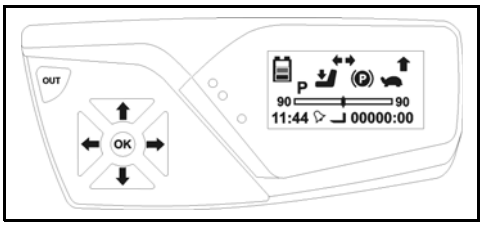

Enter the service menu
[see SERVICE MENU PASSWORD INSERTION PROCEDURE paragraph]

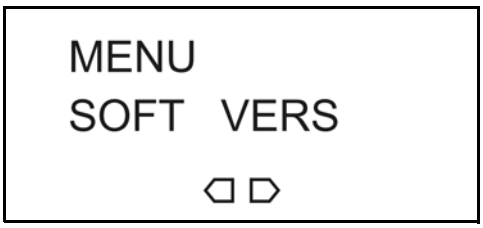

Press **OK** to confirm

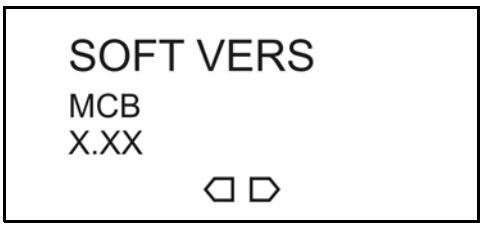

Use right and left arrows board buttons to navigate the menu

Press **OUT** to exit the menu

Remarks: X.XX identifies the version of the installed software

SOFTWARE VERSION MENU MAP

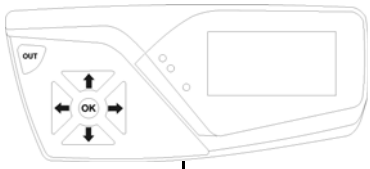

PLEASE INSERT SERV. PASSWORD

SOFT VERS

1 - MCB
2 - ARMREST
3 -TRACTION
4 - MHYRIO
5 - PUMP
6 -DISPLAY

SOFT VERS FUNCTION

The SOFT VERS function is used to display the versions of the board and logic unit software installed in the truck.

Card	Description	Notes
MCB	Identifies the MCB board	
ARMREST	Identify the armrest board	Available only with electric control valve
TRACTION	Identifies the traction logic unit	
MHYRIO UNIT	Identifies the MHYRIO board	Available only with electric control valve
PUMP	Identify the lifting logic unit	
DISPLAY	Identify the dashboard	

The Display reads the software versions of the other boards in real time via the CAN-BUS. If a card does not communicate or is not present on the CAN-BUS line, the display will not be able to show the required software version.

PARAM CHANGE

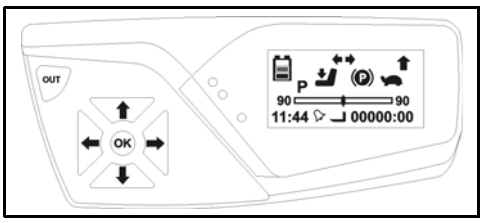

Enter the service menu
[see SERVICE MENU PASSWORD INSERTION PROCEDURE paragraph]

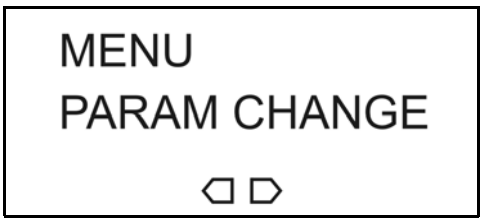

Press ➡ till reach the PARAM CHANGE menu

Press **OK** to enter the menu

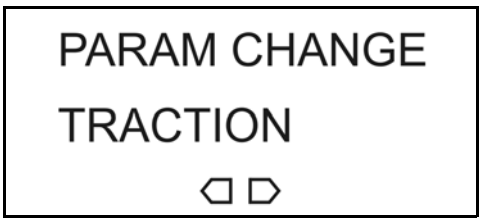

Use ⬅ ➡ to select

TRACTION (traction parameters)
o
MAT. HANDLING (hydraulic function parameters)

Press **OK** to confirm

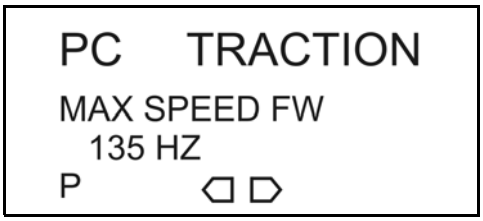

Use buttons ⬅ and ➡ to navigate the menu

Use the button LPH to select the set [L-P-H] you wish to edit.

Press **OK** to select the required parameter

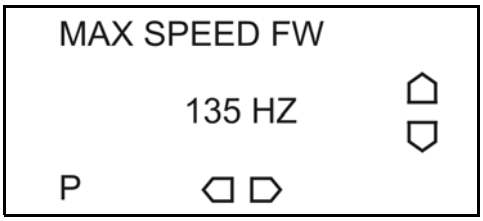

Press ⬆ or ⬇ to modify the value

Press **OK** to confirm

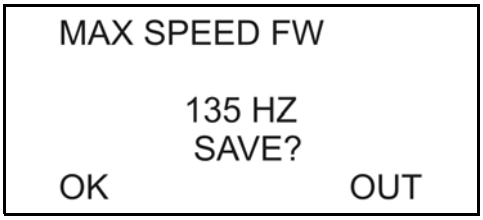

Press **OK** to save

Press **OK** to exit without saving

Press **OUT**

PARAM CHANGE ADVANCED

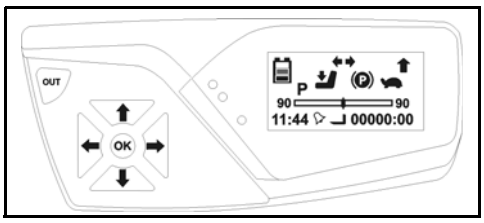

Enter the service menu
[see SERVICE MENU PASSWORD INSERTION PROCEDURE paragraph]

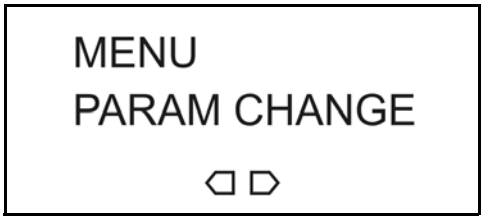

Press ➡ till reach the PARAM CHANGE menu

Hold down the **OK** key for approx. 5 sec to enable the **PARAMETER CHANGE ADVANCE menu**

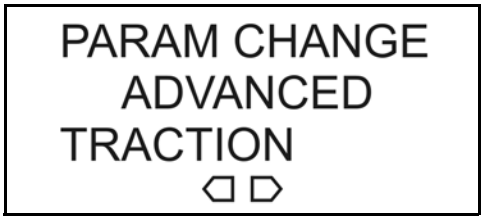

Use ⬅ ➡ to select

TRACTION (traction parameters)
o
MAT. HANDLING (hydraulic function parameters)

Press **OK** to confirm

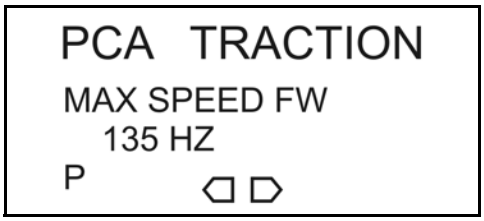

Use buttons ⬅ and ➡ to navigate the menu

Use the button LPH to select the set [L-P-H] you wish to edit.

Press **OK** to select the required parameter

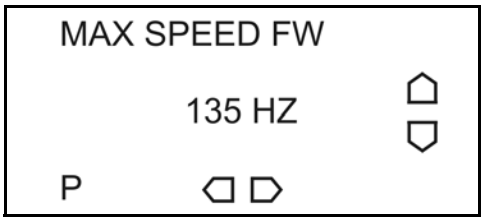

Press ⬆ or ⬇ to modify the value

Press **OK** to confirm

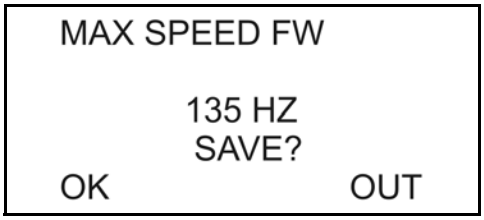

Press **OK** to save

Press **OK** to exit without saving

Press **OUT**

PARAMETER CHANGE MENU MAP

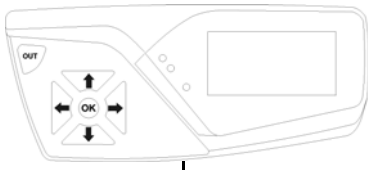

PLEASE INSERT SERV. PASSWORD

SOFT VERS

PARAM CHANGE

PARAM CHANGE BASIC

PARAM CHANGE ADVANCED

TRACTION

- 2 - T CURVE CUTBACK
- 7 - MAX SPEED FW
- 8 - MAX SPEED BW
- 9 - T ACC DELAY
- 11 - INVERSION BRK
- 12 - RELEASE BRK
- 13 - PEDAL BRK

MAT. HANDLING

- 1 - MIN SPEED UP
- 2 - MAX SPEED UP
- 3 - TILT SPEED FINE
- 4 - SHIFT SPEED FINE
- 5 - IV WAY SPEED FINE
- 6 - V WAY SPEED FINE
- 7 - HYDRO SPEED FINE

TRACTION

- 1 - T TURTLE CUTBACK
- 2 - T CURVE CUTBACK
- 3 - T BRAKE CUTBACK
- 4 - T SPEED CUTBACK
- 5 - ACC + BRAKE REDUCT
- 6 - ANGLE THRESHOLD
- 7 - MAX SPEED FW
- 8 - MAX SPEED BW
- 9 - T ACC DELAY
- 10 - SPEED LIMIT BRK
- 11 - INVERTION BRK
- 12 - RELEASE BRK
- 13 - PEDAL BRK
- 14 - ACC SMOOTH
- 15 - INV SMOOTH
- 16 - STOP SMOOTH
- 17 - THROTTLE 0
- 18 - FREQ CREEP
- 19 - THROTTLE X
- 20 - THROTTLE Y
- 21 - DHU CBK SPEED
- 22 - TORQUE PROFILE

MAT. HANDLING

- 1 - MIN SPEED UP
- 2 - MAX SPEED UP
- 3 - TILT SPEED FINE
- 4 - SHIFT SPEED FINE
- 5 - IV WAY SPEED FINE
- 6 - V WAY SPEED FINE
- 7 - HYDRO SPEED FINE
- 8 - P TURTLE CUTBACK
- 9 - P CUTBACK SPEED1
- 10 - P ACC DELAY
- 11 - P DEC DELAY
- 12 - P THROTTLE 0 **
- 13 - P THROTTLE X **
- 14 - P THROTTLE Y **
- 15 - CURVE MODE *

* Only for version with electro-proportional distributor

** Only for version with mechanical distributor

TRACTION FUNCTION

The Traction function is used to view/modify the traction system parameters.

1 - T TURTLE CUTBACK

DESCRIPTION	MIN.	MAX	STEP	UNIT
Determines the speed reduction of the turtle function	0	100	10	%

Minimum setting = maximum reduction
Maximum setting = no reduction

2 - T CURVE CUTBACK

DESCRIPTION	MIN.	MAX	STEP	UNIT
Determines the speed reduction in curve:	0	100	10	%

Minimum setting = maximum reduction
Maximum setting = minimum reduction

3 - T BRAKE CUTBACK

DESCRIPTION	MIN.	MAX	STEP	UNIT
Determines the deceleration ramp when one or more speed reduction requests are active.	5.5	15.0	0.5	Sec

The parameter acts on the reductions:

- T TURTLE CUTBACK
- T SPEED CUTBACK
- ACC + BRAKE REDUCT

Minimum setting = maximum reduction
Maximum setting = minimum reduction

4 - T SPEED CUTBACK

DESCRIPTION	MIN.	MAX	STEP	UNIT
This parameter determines the traction speed reduction in relation to the state of the microswitch (normally closed N.C.) between pin 13 connector JT and pin 9 connector JT: Microswitch open = reduction on Microswitch closed = reduction off Minimum setting = maximum reduction Maximum setting = no reduction	0	100	10	%

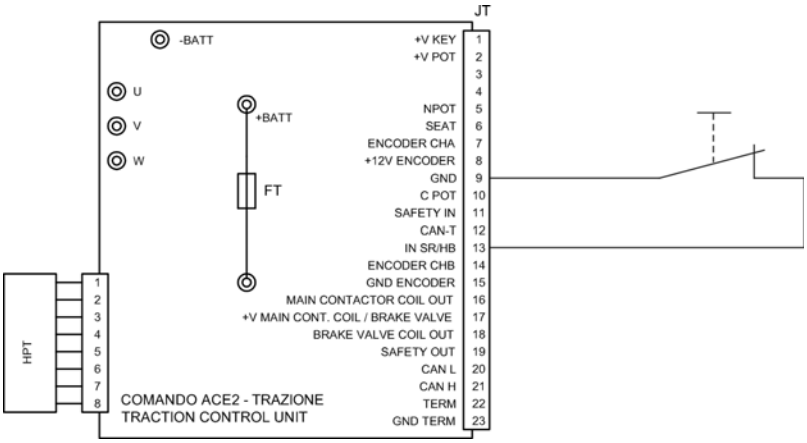

5 - ACC + BRAKE REDUCT

DESCRIPTION	MIN.	MAX	STEP	UNIT
Determines the speed reduction when the accelerator pedal is pressed and the service brake pedal microswitch activated: Minimum setting = maximum reduction Maximum setting = minimum reduction	0	100	10	%

6 - ANGLE THRESHOLD

DESCRIPTION	MIN.	MAX	STEP	UNIT
Determines the steering angle from where the speed reduction starts on a bend, set by the parameter T CURVE CUTBACK			1	°a

SPEED REDUCTION RAMP IN CURVE

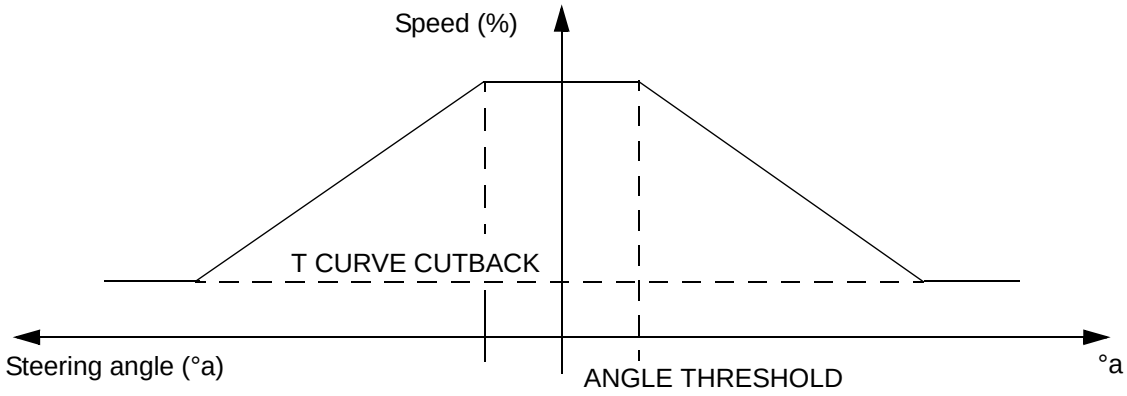

7 - MAX SPEED FW

DESCRIPTION	MIN.	MAX	STEP	UNIT
Determines the maximum forward speed	40	135	5	Hz
km/h = (Hz x 30) / 320				

8 - MAX SPEED BW

DESCRIPTION	MIN.	MAX	STEP	UNIT
Determines the maximum backward speed	40	135	5	Hz
km/h = (Hz x 30) / 320				

9 - T ACC DELAY

DESCRIPTION	MIN.	MAX	STEP	UNIT
Determines the acceleration ramp.	5.5	17.5	0.5	Sec
Minimum setting = maximum acceleration Maximum setting = minimum acceleration				

10 - SPEED LIMIT BRK

DESCRIPTION	MIN.	MAX	STEP	UNIT
Determines the deceleration ramp when the accelerator pedal is partially released	4.0	17.5	0.5	Sec
Minimum setting = minimum deceleration Maximum setting = maximum deceleration				

11 - INVERSION BRK

DESCRIPTION	MIN.	MAX	STEP	UNIT
Determines the deceleration ramp when the direction is inverted	4.0	13.5	0.5	Sec
Minimum setting = minimum deceleration Maximum setting = maximum deceleration				

12 - RELEASE BRK

DESCRIPTION	MIN.	MAX	STEP	UNIT
Determines the deceleration ramp when the accelerator pedal is released	4.0	13.5	0.5	Sec
Minimum setting = minimum deceleration Maximum setting = maximum deceleration				

13 - PEDAL BRK

DESCRIPTION	MIN.	MAX	STEP	UNIT
Determines the deceleration ramp when the brake pedal is pressed	5.5	17.5	0.5	Sec
Minimum setting = minimum deceleration Maximum setting = maximum deceleration				

14 - ACC SMOOTH

DESCRIPTION	MIN.	MAX	STEP	UNIT
Determines the acceleration delay in the range between 0Hz and the frequency established by the STOP SMOOTH parameter: Minimum setting = maximum acceleration Maximum setting = minimum acceleration	0	4.5	0.5	Sec

15 - INV SMOOTH

DESCRIPTION	MIN.	MAX	STEP	UNIT
Determines the reverse acceleration delay in the range between 0Hz and the frequency established by the STOP SMOOTH parameter: Minimum setting = maximum acceleration Maximum setting = minimum acceleration	0	36	4	Sec

16 - STOP SMOOTH

DESCRIPTION	MIN.	MAX	STEP	UNIT
Determines the end of the acceleration and inversion delays established by the ACCELERATION SMOOTH and INVERSION SMOOTH parameters: Minimum setting = minimum delays Maximum setting = maximum delays	4	22	2	Hz

17 - THROTTLE 0

DESCRIPTION	MIN.	MAX	STEP	UNIT
This parameter determines a 0 value zone in the acceleration bend Image reference 2	0	18	2	%

18 - FREQ CREEP

DESCRIPTION	MIN.	MAX	STEP	UNIT
Determines the minimum frequency applied to the motor Image reference 2	0.1	1.0	0.1	Hz

19 - THROTTLE X

DESCRIPTION	MIN.	MAX	STEP	UNIT
Determines an X value zone in the acceleration curve	10	100	10	%

Image reference 2

20 - THROTTLE Y

DESCRIPTION	MIN.	MAX	STEP	UNIT
Determines an Y value zone in the acceleration curve	10	100	10	%

Image reference 2

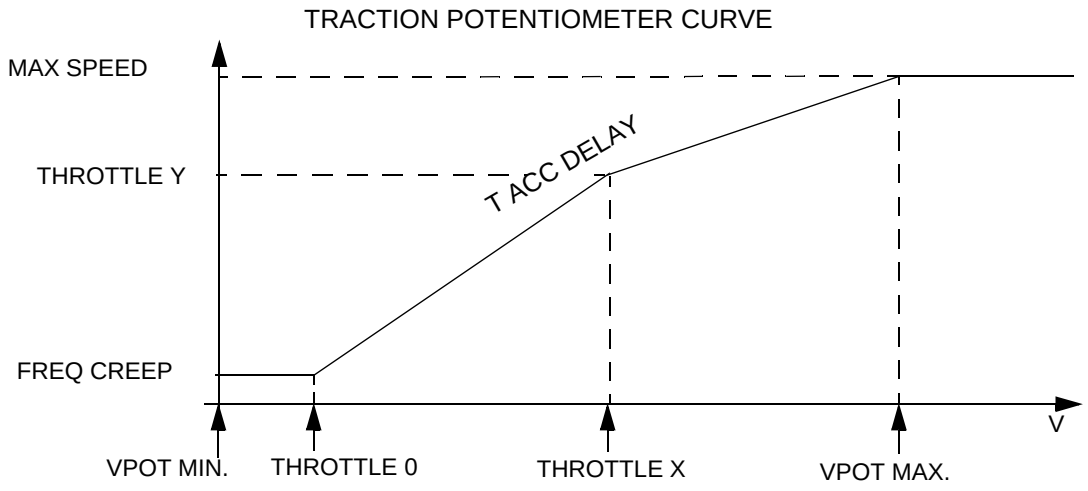

IMAGE 2

21 - DHU CBK SPEED

DESCRIPTION	MIN.	MAX	STEP	UNIT
Determines the speed reduction of the DHU	0	100	10	%

Minimum setting = maximum reduction
Maximum setting = no reduction

22 - TORQUE PROFILE

DESCRIPTION	MIN.	MAX	STEP	UNIT
Determines the traction motor torque	0	4	1	

Minimum setting = minimum torque
Maximum value = maximum torque

MAT. HANDLING

The Mat. The Handling function is used to view/modify the hydraulic system parameters.

1 - MIN SPEED UP

DESCRIPTION	MIN.	MAX	STEP	UNIT
Determines the minimum lifting speed	14	32	2	Hz
Minimum setting = minimum speed Maximum value = maximum speed				

2 - MAX SPEED UP

DESCRIPTION	MIN.	MAX	STEP	UNIT
Determines the maximum lifting speed	100	145	5	Hz
Minimum setting = minimum speed Maximum value = maximum speed				

3 - TILT SPEED FINE

DESCRIPTION	MIN.	MAX	STEP	UNIT
Determines the maximum tilting speed	20	56	2	Hz
Minimum setting = minimum speed Maximum value = maximum speed				

4 - SHIFT SPEED FINE

DESCRIPTION	MIN.	MAX	STEP	UNIT
Determines the maximum sideshift speed	20	58	2	Hz
Minimum setting = minimum speed Maximum value = maximum speed				

5 - IV WAY SPEED FINE

DESCRIPTION	MIN.	MAX	STEP	UNIT
Determines the maximum 4th way speed	20	56	2	Hz
Minimum setting = minimum speed Maximum value = maximum speed				

6 - V WAY SPEED FINE

DESCRIPTION	MIN.	MAX	STEP	UNIT
Determines the maximum 5th way speed	18	56	2	Hz
Minimum setting = minimum speed Maximum value = maximum speed				

7 - HYDRO SPEED FINE

DESCRIPTION	MIN.	MAX	STEP	UNIT
Determines the frequency supplied to the pump motor to the hydraulic steering system	22	31	1	Hz
Minimum setting = slow steer Maximum value = Fast steer				

8 - P TURTLE CUTBACK

DESCRIPTION	MIN.	MAX	STEP	UNIT
Determines the speed reduction of the turtle function	0	100	10	%
Minimum setting = maximum reduction Maximum setting = no reduction				

9 - P CUTBACK SPEED1

DESCRIPTION	MIN.	MAX	STEP	UNIT
This parameter determines the pump motor speed reduction in relation to the state of the microswitch (normally closed N.C.) between pin 13 connector JP and pin 9 connector JP: Microswitch open = reduction on Microswitch closed = reduction off Minimum setting = maximum reduction Maximum setting = no reduction	0	100	10	%

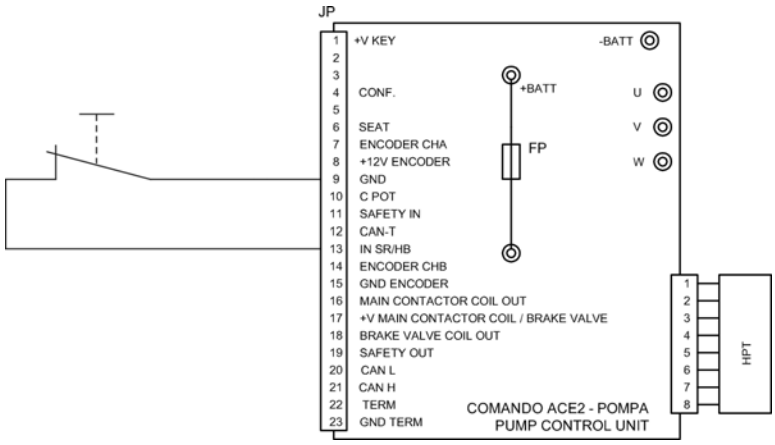

10 - P ACC DELAY

DESCRIPTION	MIN.	MAX	STEP	UNIT
Determines the acceleration ramp of the pump motor	1.0	4.6	0.4	Sec
Minimum setting = maximum acceleration Maximum setting = minimum acceleration				

11 - P DEC DELAY

DESCRIPTION	MIN.	MAX	STEP	UNIT
Determines the deceleration ramp of the pump motor	1.0	4.6	0.4	Sec
Minimum setting = maximum acceleration Maximum setting = minimum deceleration				

12 - P THROTTLE 0

DESCRIPTION	MIN.	MAX	STEP	UNIT
This parameter determines a 0 value zone in the acceleration bend	0	18	2	%
Only for version with mechanical distributor (Image reference 4)				

13 - P THROTTLE X

DESCRIPTION	MIN.	MAX	STEP	UNIT
Determines an X value zone in the acceleration curve	10	100	10	%
Only for version with mechanical distributor (Image reference 4)				

14 - P THROTTLE Y

DESCRIPTION	MIN.	MAX	STEP	UNIT
Determines an Y value zone in the acceleration curve	10	100	10	%
Only for version with mechanical distributor (Image reference 4)				

LIFTING POTENTIOMETER CURVE

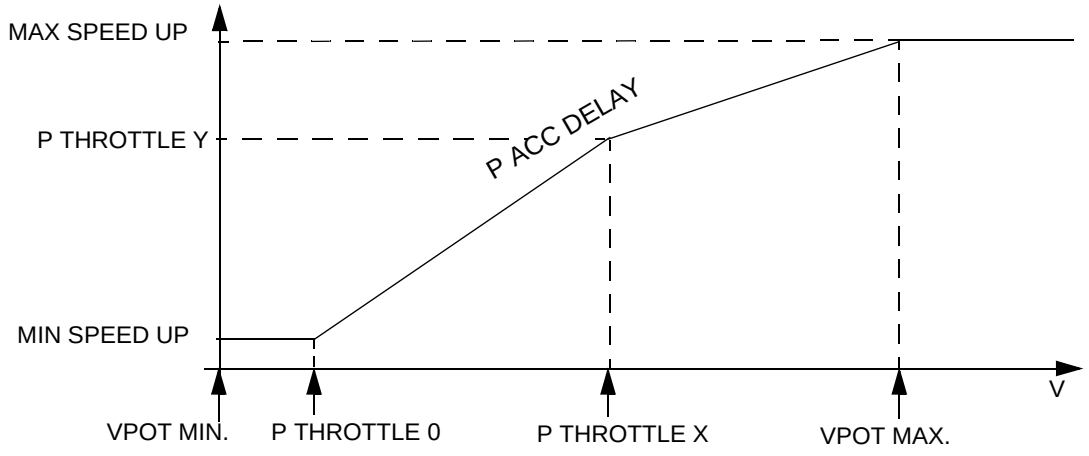

IMAGE 4

15 - CURVE MODE

DESCRIPTION	MIN.	MAX	STEP	UNIT
Determines the sensitivity of the joystick according to the potentiometer stroke	0	3	1	---

Minimum setting = very sensitive
Maximum setting = insensitive

Only for version with electro-proportional distributor
(Image reference 5)

LIFTING POTENTIOMETER CURVE FINGERTIPS/JOYSTICK

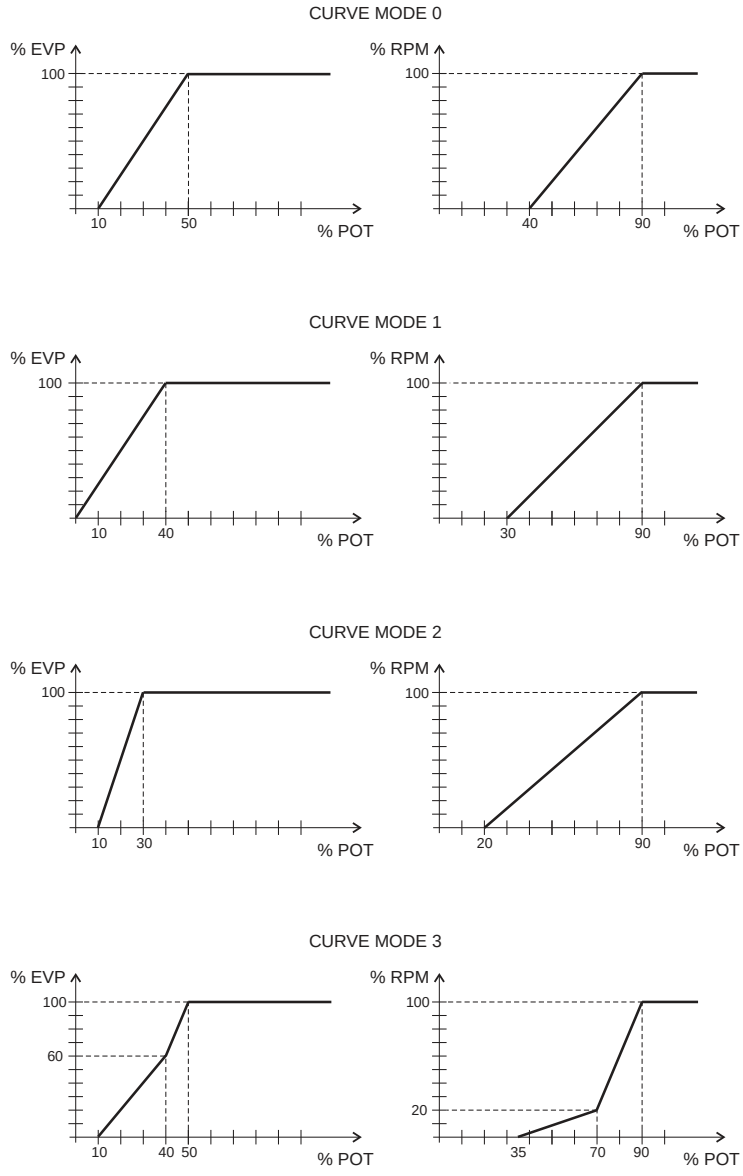

IMAGE 5

TRUCK CONF

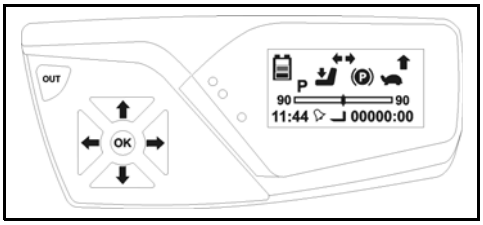

Enter the service menu
[see SERVICE MENU PASSWORD INSERTION PROCEDURE paragraph]

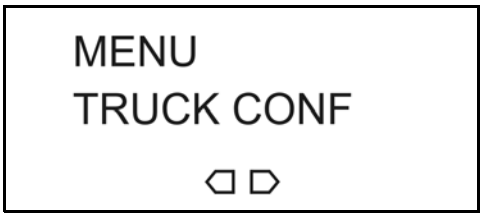

Press ➡ till reach the TRUCK CONF menu
Press **OK** to confirm

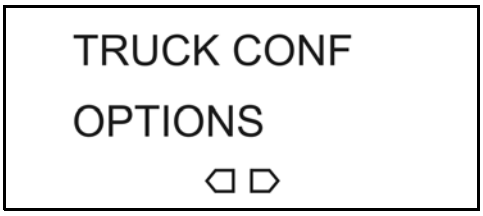

Use ⬅ and ➡ to select the required menu

Press **OK** to confirm

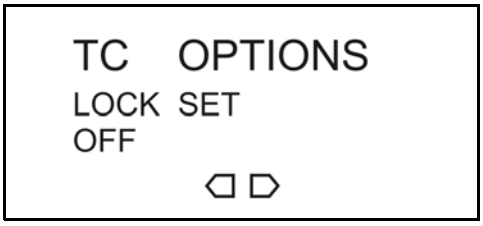

Use ⬅ or ➡ to navigate inside the menu and select the required parameter

Press **OK** to confirm

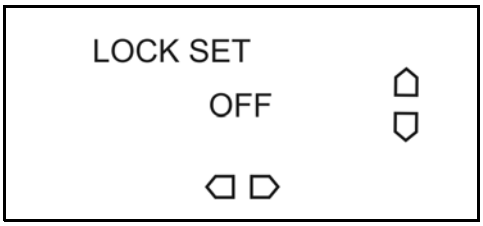

Press ⬆ or ⬇ to modify the value

Press **OK** to confirm

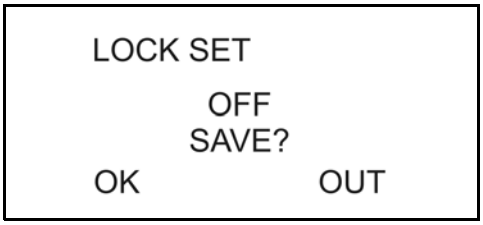

Press **OK** to save; on the display the message SAVE SUCCESSFUL appears, therefore press **OUT** to return to the menu

Press **OK** to exit without saving

Press **OUT**

TRUCK CONFIGURATION MENU MAP

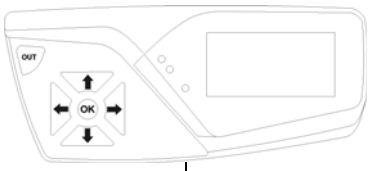

PLEASE INSERT SERV. PASSWORD

SOFT VERS

PARAM CHANGE

TRUCK CONF

- OPTION
  - 1 - LOCK SET
  - 2 - START ICON
  - 3 - PIN CODE
  - 4 - DY PIN ENABLE
  - 5 - SWAYING PEDAL
  - 6 - GEAR RATIO
- MOTORS
  - 1 - T MAX CURRENT
  - 2 - P MAX CURRENT
- RESET
  - 1 - RESET JOY FLAG
  - 2 - RESET PUMP HM
  - 3 - RESET TRAC HM
  - 4 - RESET KEY HM
- BATTERY
  - 1 - BDI RESET
  - 2 - BDI ADJ MIN
  - 3 - BDI ADJ MAX
  - 4 - ADJUSTMENT 3
  - 5 - BDI GEL
- VALVE CURRENT
  - 1 - MIN CURR DRAIN
  - 2 - MAX CURR DRAIN
  - 3 - MIN CURR LOWER
  - 4 - MAX CURR LOWER

OPTIONS FUNCTION

The options function is used to enable/disable the machine configuration options.

No	Parameter	Description	Notes
1	**LOCK SET**	This parameter enables/disables the LPH push button working: ON = LPH function disabled OFF = LPH function enabled	ON-OFF
2	**START ICON**	This parameter determines which logo must be visualized at the starting	Cesab-BT
3	**PIN CODE**	Enables/Disables the PIN CODE entry request when switching on: NONE = disabled DISPLAY = enabled	
4	**DY PIN ENABLE**	Determines the number of Pin Codes enabled	1÷40
5	**SWAYING PEDAL**	This parameter enables/disables with balanced pedal system ON = enabled OFF = disabled *Note: if the parameter is modified the traction potentiometer acquisition must be repeated*	ON-OFF
6	**GEAR RATIO**	This parameter determines the reduction ratio of the reduction gear in relation to the truck speed calculus	n°

MOTORS FUNCTION

The motors function is used to enable/disable the electric motor parameters.

No	Parameter	Description	Notes
1	**T MAX CURRENT**	Determines the drive motor current expressed as a percentage of the maximum current: - min. setting = min. current - maximum setting = maximum current	%
2	**P MAX CURRENT**	Determines the lifting motor current expressed as a percentage of the maximum current: - min. setting = min. current - maximum setting = maximum current	%

RESET FUNCTION

Reset of the hours counter and Fingertips-Joystick configuration

No	Parameter	Description	Notes
1	**RESET JOY FLAG**	MCB board configuration reset (Mechanical/electro-proportional distributor)	
2	**RESET PUMP HM**	Pump hours counter reset	
3	**RESET TRAC HM**	Traction hours counter reset	
4	**RESET KEY HM**	Key hours counter reset	

BATTERY FUNCTION

Used to modify the battery indicator parameters.

No	Parameter	Description	Notes
1	**BDI RESET**	Determines the minimum recharge the battery has to receive for the partial or total reset of the indicator. (See chapter 1 paragraph BATTERY MANAGEMENT)	%
2	**BDI ADJ MIN**	Determines the voltage below which the battery indicator signals 0% residual charge (See chapter 1 paragraph BATTERY MANAGEMENT)	%
3	**BDI ADJ MAX**	Determines the voltage above which the battery indicator signals 100% charge (See chapter 1 paragraph BATTERY MANAGEMENT)	%
4	**ADJUSTMENT 3**	Determines the reset curve (See chapter 1 paragraph BATTERY MANAGEMENT)	%
5	**BDI GEL**	Enables the discharge curve for GEL batteries (See chapter 1, paragraph ADJUSTING THE GEL BATTERY INDICATOR)	ON/OFF

VALVE CURRENT FUNCTION

Displays and modifies the currents of the solenoid valves of the electro-proportional distributor.

No	Parameter	Description	Notes
1	**MIN CURRENT DRAIN**	Determines the min. current of the DRAIN coil min. = 100 mA max. = 500 mA	A
2	**MAX CURRENT DRAIN**	Determines the max. current of the DRAIN coil min. = 100 mA max. = 500 mA	A
3	**MIN CURRENT LOWER**	Determines the min. current of the lower coil min. = 100 mA max. = 500 mA	A
4	**MAX CURRENT LOWER**	Determines the max. current of the lower coil min. = 100 mA max. = 500 mA	A

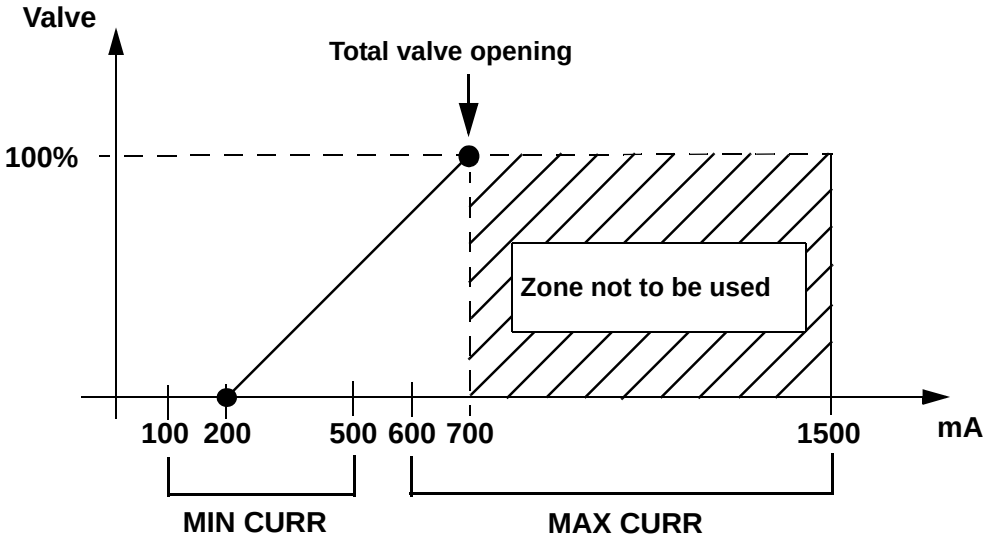

MIN CURR:
Increasing or decreasing the value affects the sensitivity of the fingertip control in the initia
MAX CURR:
Increasing or decreasing the value affects the maximum opening of the valve.

SERVICE RENT

The SERVICE RENT function is used to set a time interval (days or hours of pump operation) after which the display cuts in speed reductions.

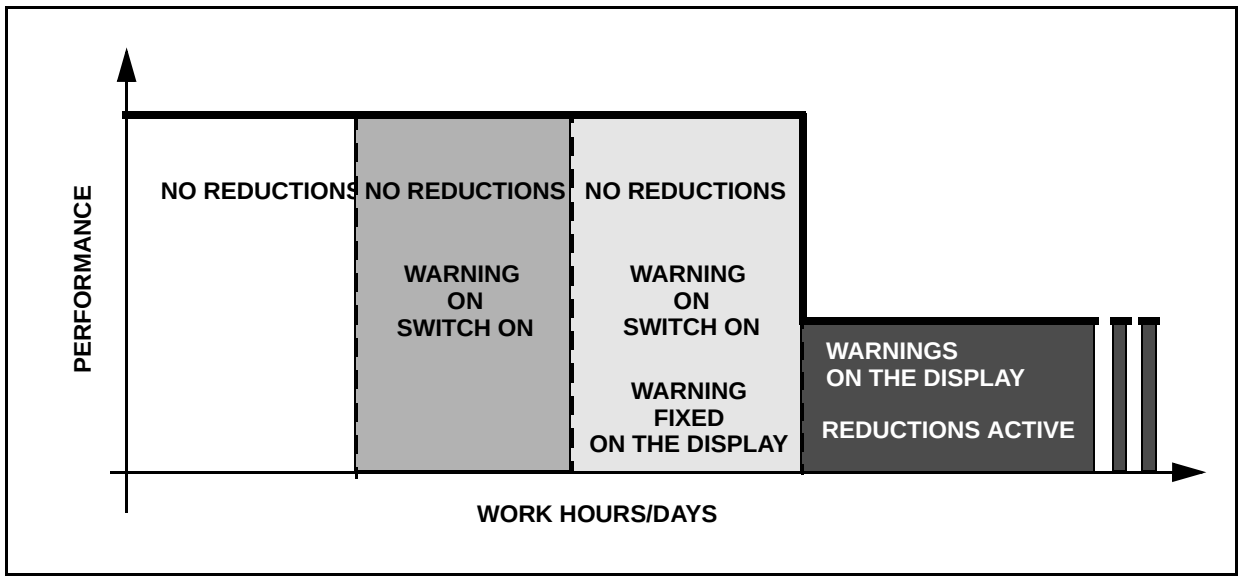

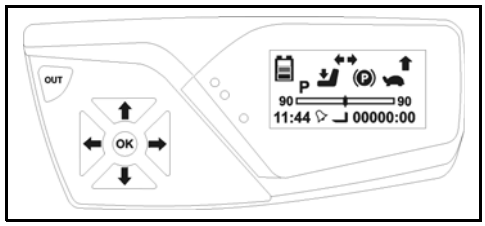

Enter the service menu
[see SERVICE MENU PASSWORD INSERTION PROCEDURE paragraph]

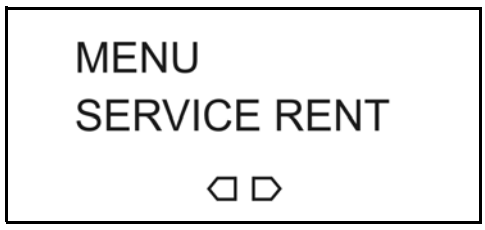

Press ➡ till reach the SERVICE RENT menu
Press **OK** to confirm

Use right and left arrows board buttons to navigate the menu

Press **OUT** to exit the menu

SERVICE RENT MENU MAP

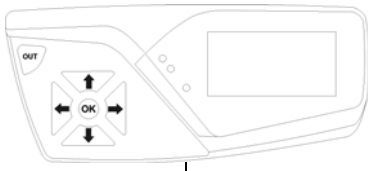

PLEASE INSERT SERV. PASSWORD

SOFT VERS

PARAM CHANGE

TRUCK CONF

SERVICE RENT

- 1 - SERV TIMER EN
- 2 - RESET SERV HM
- 3 - SERV REQ TIME
- 4 - SERV TIME BLIK
- 5 - SERV CUT TIME
- 6 - T SERV CUTBACK
- 7 - P SERV CUTBACK
- 8 - RENT TIMER EN
- 9 - RENT TIME/DAY
- 10 - T RENT CUTBACK
- 11 - P RENT CUTBACK

WITH “RENT TIME/DAY” = DAY

- 12 - RESET RENT HM
- 13 - RENT REQ TIME
- 14 - RENT TIME BLINK
- 15 - RENT CUT TIME

WITH “RENT TIME/DAY” = DAY

- 12 - RENT END DAY
- 13 - RENT DAY BLINK
- 14 - RENT CUT DAY

No	Function	Description	Notes
1	**SERV TIMER EN (service timer enable)**	Enables/disables the programmed maintenance timer	
2	**RESET SERV HM (reset service hour meter)**	This function resets the SERV TIMER EN timer	
3	**SERV REQ TIME (service request time)**	This function determines the maintenance interval: **A** reference (PROGRAMMED MAINTENANCE DIAGRAM)	When the set time expires the red led starts to blink
4	**SERV TIME BLINK (service time blink)**	SERV REQ TIME expired notice: **C** reference (PROGRAMMED MAINTENANCE DIAGRAM)	Spanner icon and red led flash when the truck is switched on
5	**SERV CUT TIME (service cutback time)**	This function determines, SERV REQ TIME expired, after how much time the truck enters in limited working system: **B** reference (PROGRAMMED MAINTENANCE DIAGRAM)	
6	**T SERV CUTBACK (traction service cutback)**	Sets the percentage of traction system reduction when the SERV REQ TIME expires: **D** reference (PROGRAMMED MAINTENANCE DIAGRAM)	
7	**P SERV CUTBACK (pump service cutback)**	This function sets the percentage of working reduction when SERV CUT TIME is expired; **D** reference (PROGRAMMED MAINTENANCE DIAGRAM)	
8	**RENT TIMER EN (rental timer enable)**	This function enables/disables the timer of the rental duration	
9	**RENT TIME/DAY**	This function determines (selects) the Timer Rent working in hours or days; if the DAY function is selected it is not possible to modify the date in the USER menu	WH = hours DAY = days
10	**T RENT CUTBACK (traction rental cutback)**	Sets the percentage of traction system reduction when the RENT CUT TIME or RENT CUT DAY expires	
11	**P RENT CUTBACK (pump rental cutback)**	Sets the percentage of lifting system reduction when the RENT CUT TIME or RENT CUT DAY expires	
12	**RESET RENT HM (reset rental hour meter)**	This function resets the timer RENT TIMER EN	
13	**RENT REQ TIME (rental request time)**	This function determines the rent interval; **A** reference (PROGRAMMED RENT DIAGRAM)	

No	Function	Description	Notes
14	**RENT TIME BLINK (rental time blink)**	RENT REQ TIME expired notice: **C** reference (PROGRAMMED RENT DIAGRAM) RENT DIAGRAM)	RENT icon and red led flash when the truck is switched on
15	**RENT CUT TIME (rental cutback time)**	This function determines, RENT REQ TIME expired, after how much time the truck enters in limited working system	
12	**RENT END DAY**	Defines the day in which the Rent time expires; **A** reference (PROGRAMMED with DAY selected)	
13	**RENT DAY BLINK**	This function determines, RENT END DAY expired, after how much time the truck enters in limited working system **C** reference (PROGRAMMED RENT DIAGRAM) with DAY selected	Max duration15 days
14	**RENT CUT DAY**	This function defines the activation time of the speed reduction; **B** reference (PROGRAMMED RENT DIAGRAM)	Max duration15 days

PROGRAMMED MAINTENANCE DIAGRAM

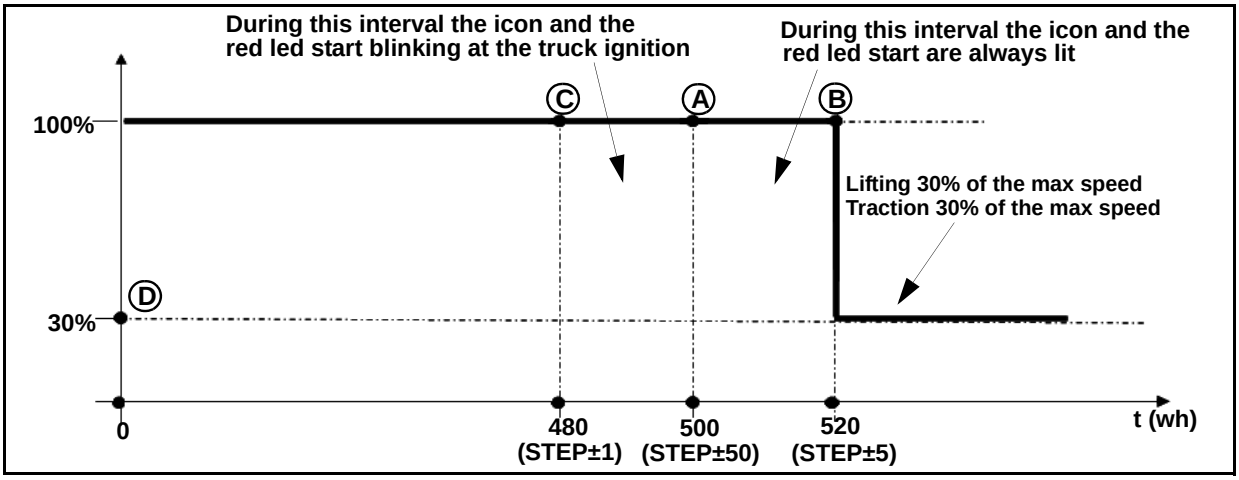

PROGRAMMED RENT DIAGRAM

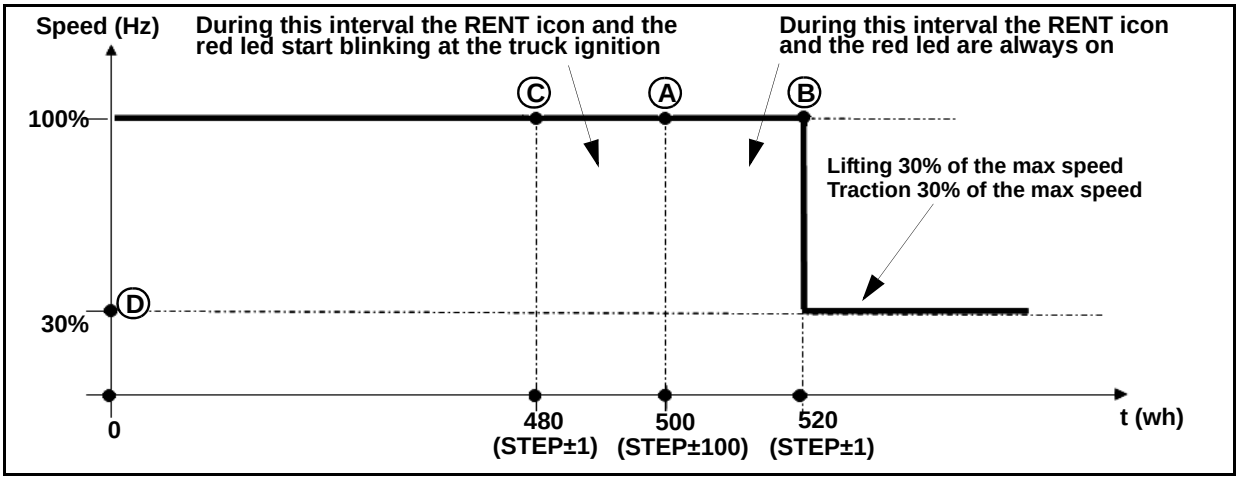

PSW MODIFY

The PSW MODIFY function is used to associate profiles and modify the truck switch on code passwords.

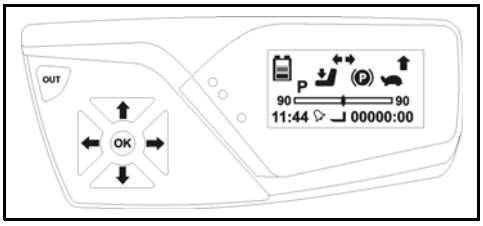

Enter the service menu
[see SERVICE MENU PASSWORD INSERTION PROCEDURE paragraph]

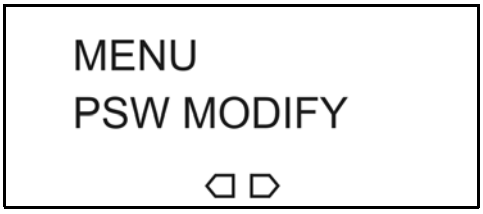

Press ➡ till reach the PSW MODIFY menu
Press **OK** to confirm

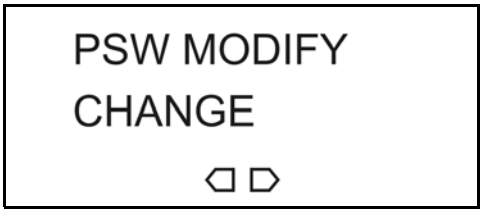

Use ⬅ ➡ to select

CHANGE or DEFAULT

Press **OK** to confirm

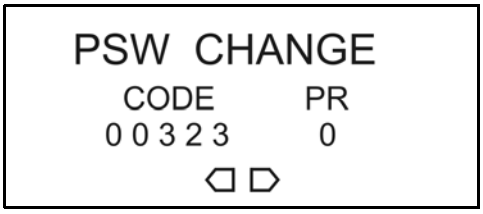

Use ⬅ and ➡ to select the PIN CODE to be edited

Press **OK** to confirm

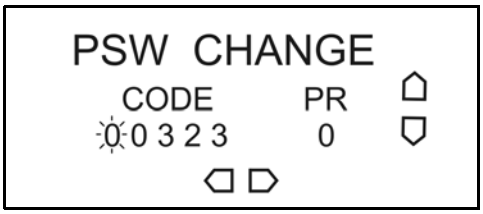

Use ⬅ ➡ to select the box to be edited

Use ⬇ ⬆ to edit the values

Press **OK** to confirm

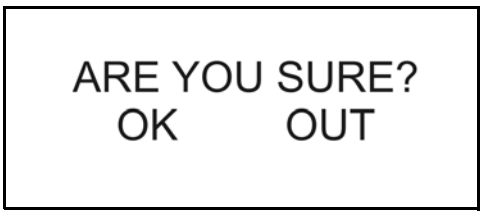

Press **OK** to save

Press **OK** to exit without saving

Press **OUT**

PSW MODIFY MENU MAP

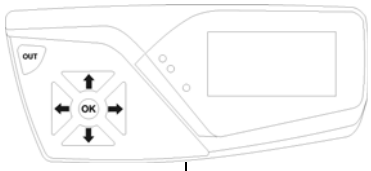

PLEASE INSERT
SERV. PASSWORD

SOFT VERS

PARAM CHANGE

TRUCK CONF

SERVICE RENT

PSW MODIFY

1 - CHANGE 2 - DEFAULT

Function	Description	Notes
CHANGE	This function allows to modify pin code and related profile 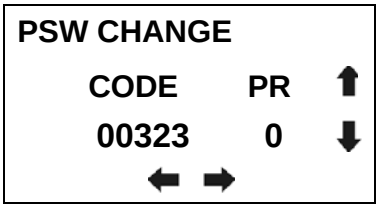	Code = switch on code PR = profile associated to the switch on code
DEFAULT	Reset all the default passwords	Reference to the PIN CODE table

SWITCHING THE TRUCK ON USING THE PIN CODE

The truck can be switched on using a 5-digit pin code by enabling the parameter **PIN CODE = DISPLAY**

Activating the pin code request, every time the truck is switched the display will request the pin code insertion.

Using the parameter **DY PIN ENABLE** it is possible to enable from 1 to a maximum of 40 different switch on codes.

The table below shows the 40 standard pin codes and relative associated profiles

PIN CODE table

Ref.	PIN CODE	ASSOCI-ATED PROFILE	Ref.	PIN CODE	ASSOCI-ATED PROFILE	Ref.	PIN CODE	ASSOCI-ATED PROFILE	Ref.	PIN CODE	ASSOCI-ATED PROFILE
1	**00323**	**0**	*11*	**11404**	**0**	*21*	**22433**	**0**	*31*	**34132**	**0**
2	**01034**	**1**	*12*	**12403**	**1**	*22*	**23013**	**1**	*32*	**34343**	**1**
3	**02021**	**2**	*13*	**13042**	**2**	*23*	**23401**	**2**	*33*	**40010**	**2**
4	**02102**	**3**	*14*	**14143**	**3**	*24*	**24431**	**3**	*34*	**40143**	**3**
5	**03033**	**4**	*15*	**14021**	**4**	*25*	**30001**	**4**	*35*	**41342**	**4**
6	**03421**	**0**	*16*	**14322**	**0**	*26*	**30204**	**0**	*36*	**41414**	**0**
7	**04031**	**1**	*17*	**20102**	**1**	*27*	**32040**	**1**	*37*	**42231**	**1**
8	**04432**	**2**	*18*	**21020**	**2**	*28*	**33300**	**2**	*38*	**43001**	**2**
9	**10043**	**3**	*19*	**22010**	**3**	*29*	**33410**	**3**	*39*	**43203**	**3**
10	**11020**	**4**	*20*	**22344**	**4**	*30*	**34010**	**4**	*40*	**44044**	**4**

PROFILE DESCRIPTION

It is possible to modify the performance (traction and hydraulic functions) of the truck by creating up to five different machine profiles (0 - 1 - 2 - 3 - 4), each profile can in turn by modified in L-P-H mode

In the standard configuration the machine has all five profiles configured with the same values and when the truck is switched on *Profile 0* is loaded in *P mode.*

To modify the parameters of the various profiles refer to chapter 03 paragraph PARAM CHANGE

TESTER

The tester function is used to view the electronic components present on the truck (current, voltage, temperature, status, etc.)

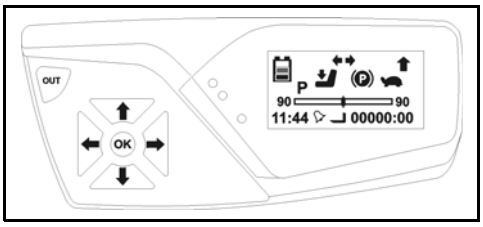

Enter the service menu
[see SERVICE MENU PASSWORD INSERTION PROCEDURE paragraph]

Press ➡ to reach the TESTER menu

Press **OK** to enter the menu

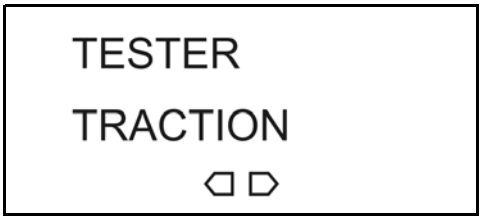

Use ⬅ ➡ to select

TRACTION (traction)
o
MAT. HANDLING (hydraulic functions)

Press **OK** to confirm

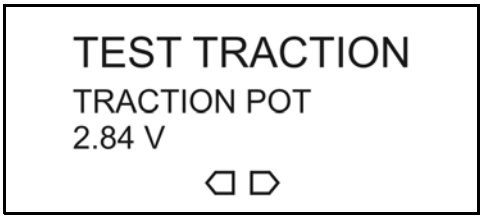

Use buttons ⬅ and ➡ to navigate the menu

Press **OUT** to exit the menu

TESTER MENU MAP

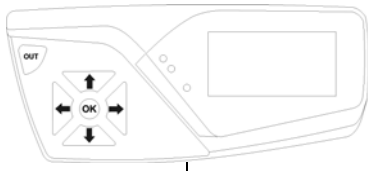

- PLEASE INSERT SERV. PASSWORD
- SOFT VERS
- PARAM CHANGE
- TRUCK CONF
- SERVICE RENT
- PSW MODIFY
- TESTER

TRACTION

1 - SPEED SET / MOT SPEED
2 - MOT SLEEP / MOT SPEED
3 - TRACTION POT
4 - SERVICE BRK
5 - SEAT
6 - FORWARD / NOT FW
7 - BACKWARD / NOT BW
8 - ENABLE / NOT EN
9 - CFG
10 - PARKING BRAKE
11 - MOTOR TEMP / CONTR TEMP
12 - MOTOR VOLTAGE
13 - BATT VOLTAGE
14 - CAP VOLTAGE
15 - DHU ENABLE

MAT. HANDLING

mechanical distributor version

1 - LIFE PUMP
2 - LIFE KEY
3 - SPEED SET / MOT SPEED
4 - MOTOR TEMP / CONTR TEMP
5 - MOT SLIP
6 - MOTOR VOLTAGE
7 - LIFT
8 - TILT
9 - SIDESHIFT
10 - IV WAY
11 - V WAY
12 - LIFT POT

electro-proportional distributor version

1 - LIFE PUMP
2 - LIFE KEY
3 - SPEED SET / MOT SPEED
4 - MOTOR TEMP / CONTR TEMP
5 - MOT SLIP
6 - MOTOR VOLTAGE
7 - LIFT
8 - TILT
9 - SIDESHIFT
10 - IV WAY
11 - V WAY

TRACTION FUNCTION

Views the traction system values

Ref.	Parameter	Description	Notes
1	**SPEED SET**	Theoretical speed requested to the drive motor	Hz
	MOT SPEED	Drive motor encoder frequency	Hz
2	**MOT SLEEP**	Speed difference between the rotating field and the driving shaft	Hz
	MOT SPEED	Drive motor encoder frequency	Hz
3	**TRACTION POT**	Accelerator potentiometer signal voltage	V
4	**SERVICE BRK**	Service brake microswitch status	ON-OFF
5	**SEAT**	Seat microswitch status	ON-OFF
6	**FORWARD**	Forward direction signal	ON-OFF
	NOT FW	No forward direction signal	ON-OFF
7	**BACKWARD**	Reverse direction signal	ON-OFF
	NOT BW	No reverse direction signal	ON-OFF
8	**ENABLE**	Direction consent signal	ON-OFF
	NOT EN	No direction consent signal	ON-OFF
9	**CFG**	Accelerator foot board configuration	PEDAL
10	**PARKING BRAKE**	Parking brake microswitch status	ON-OFF
11	**MOTOR TEMP**	Drive motor temperature	°C
	CONTR TEMP	Traction logic unit temperature	°C
12	**MOTOR VOLTAGE**	Voltage applied to the motor by the logic unit Expressed as a percentage of the maximum applicable	%
13	**BATT VOLTAGE**	Voltage present on pin 1 connector JT on the logic unit	V
14	**CAP VOLTAGE**	Voltage present on power positive (+B)	V
15	**DHU ENABLE**	DHU system enabled	ON-OFF

MAT. HANDLING

Mechanical lever control valve

Displays the hydraulic system settings for the mechanical version

Ref.	Parameter	Description	Notes
1	**LIFE PUMP**	Pump working hour counter from the first start	Hours
2	**LIFE KEY**	Key working hour counter from the first start	Hours
3	**SPEED SET**	Theoretical speed requested to the pump motor	Hz
	MOT SPEED	Pump motor encoder frequency	Hz
4	**MOTOR TEMP**	Pump motor temperature	°C
	CONTR TEMP	Temperature of the pump logic unit	°C
5	**MOT SLIP**	Speed difference between the rotating field and the driving shaft	Hz
6	**MOTOR VOLTAGE**	Voltage applied to the motor by the logic unit Expressed as a percentage of the maximum applicable	%
7	**LIFT**	Lifting lever microswitch	ON-OFF
8	**TILT**	Tilting lever microswitch	ON-OFF
9	**SIDESHIFT**	Sideshift lever microswitch	ON-OFF
10	**IV WAY**	4th way microswitch	ON-OFF
11	**V WAY**	5th way microswitch	ON-OFF
12	**LIFT POT**	Lifting potentiometer signal voltage	V

MAT. HANDLING

Electro-proportional distributor

Displays the hydraulic system settings for the electro-proportional version

Ref.	Parameter	Description	Notes
1	**LIFE PUMP**	Pump working hour counter from the first start	Hours
2	**LIFE KEY**	Key working hour counter from the first start	Hours
3	**SPEED SET**	Theoretical speed requested to the pump motor	Hz
	MOT SPEED	Pump motor encoder frequency	Hz
4	**MOTOR TEMP**	Pump motor temperature	°C
	CONTR TEMP	Temperature of the pump logic unit	°C
5	**MOT SLIP**	Speed difference between the rotating field and the driving shaft	Hz
6	**MOTOR VOLTAGE**	Voltage applied to the motor by the logic unit Expressed as a percentage of the maximum applicable	%
7	**LIFT**	Lifting potentiometer signal voltage	V
8	**TILT**	Tilting potentiometer signal voltage	V
9	**SIDESHIFT**	Sideshift potentiometer signal voltage	V
10	**IV WAY**	4th way potentiometer signal voltage	V
11	**V WAY**	5th way potentiometer signal voltage	V

ALARMS

The alarms function is used to view the error codes present on the truck in real time and the last 20 errors memorized in the display

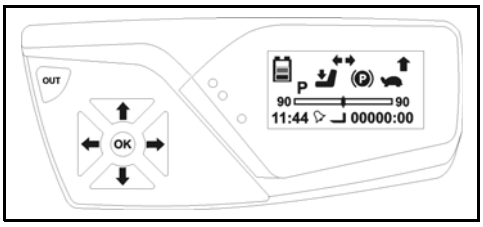

Enter the service menu
[see SERVICE MENU PASSWORD INSERTION PROCEDURE paragraph]

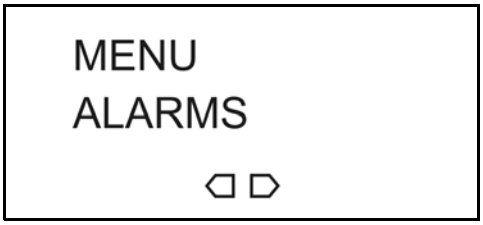

Press ➡ till reach the ALARMS menu
Press **OK** to confirm

Use right and left arrows board buttons to navigate the menu

Press **OUT** to exit the menu

Function	Description	Notes
REALTIME	This function visualizes alarms in real time	See diagnostic code list
LOGBOOK	Used to view/delete the alarms in the memory	See diagnostic code list

LOGBOOK		
Function	**Description**	**Notes**
READ	This function visualizes last 20 alarms saved **CODE YY** **N X WH XX** **BATT % XX** **PIN XXXXX** ⬅ ➡ **CODE YY** **TM DRV TMP + XX C** **TM MOT TMP + XX C** **CODE YY** **P DRV TMP + XX C** **P MOT TMP + XX C**	⬅ ➡ to move to the following error code ⬇ ⬆ to move to the next screen linked to the same error code **Code** = error code **N** = order in memory (from 1 to 20) **WH** = pump working hours **BATT** = charge percentage **PIN** = operator pin code **T DRV TMP** = traction control unit temperature **T MOT TMP** = drive motor temperature **P DRV TMP** = pump control unit temperature **P MOT TMP** = pump motor temperature
CLEAR	This function deletes alarm list	

ALARMS MENU MAP

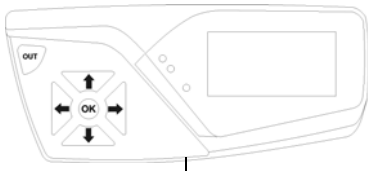

PLEASE INSERT
SERV. PASSWORD

SOFT VERS

PARAM CHANGE

TRUCK CONF

SERVICE RENT

PSW MODIFY

TESTER

ALARMS

REALTIME

LOGBOOK

1 - READ

2 - CLEAR

LEARNING

The learning function is used to memorize in the various cards and logic units the minimum and maximum traction, lifting, steering potentiometer settings and to indicate the battery voltage and truck serial number

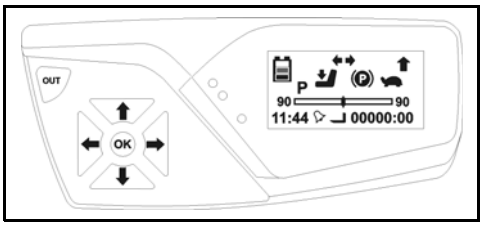

Enter the service menu
[see SERVICE MENU PASSWORD INSERTION PROCEDURE paragraph]

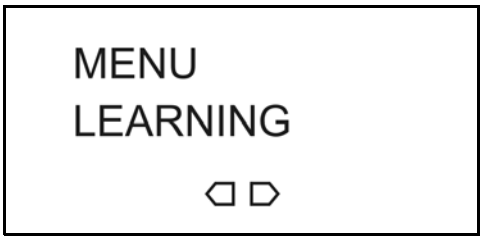

Press ➡ till reach the LEARNING menu
Press **OK** to confirm

Use right and left arrows board buttons to navigate the menu
Press **OK** to enter parameters modification and follow the instructions visualized on the display
Press **OUT** to exit the menu

ALARMS MENU MAP

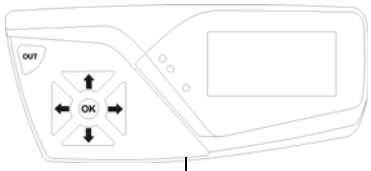

PLEASE INSERT SERV. PASSWORD

SOFT VERS

PARAM CHANGE

TRUCK CONF

SERVICE RENT

PSW MODIFY

TESTER

ALARMS

LEARNING

1 - SERIAL NUMBER	5 - ADJUST CAPACITOR
2 - LEARN TRAC POT	6 - SET STEER ZERO
3 - LEARN LIFT POT	7 - SET STEER RIGHT
4 - ADJUST BATTERY	8 - SET STEER LEFT

Ref.	Function	Description	Notes
1	**SERIAL NUMBER**	This function identifies the truck serial number 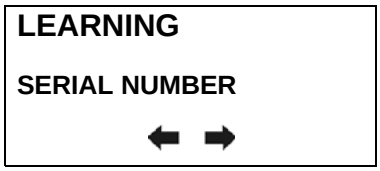 OK To enter in the menu 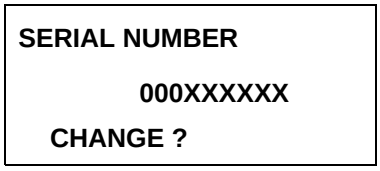 OK To confirm and start acquisition 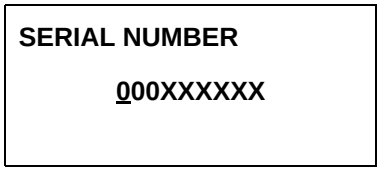 To select the field To select the field OK To end acquisition 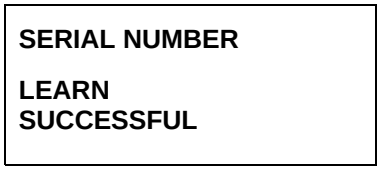 OUT To return to the first screen	The serial number acquisition must be repeated each time a card or logic unit is replaced on the truck.

Ref.	Function	Description	Notes
2	**LEARN TRAC POT**	Accelerator potentiometer acquisition **LEARNING** **LEARN TRAC POT** ⬅ ➡ (OK) To enter the menu and start acquisition **LEARN TRAC POT** **PRESS FW PED AND RELEASE THEN BW PED AND RELEASE THEN PRESS OK** 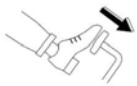 Press the accelerator pedal (forwards) to the limit and release slowly Repeat the operation with the backwards pedal (if present on the truck) (OK) To end acquisition **LEARN TRAC POT** **LEARN SUCCESSFUL** [OUT] To return to the first screen	The traction potentiometer acquisition must be repeated whenever the MCB card or potentiometer is replaced. If the display does not memorize the acquisition data, repeat the SERIAL NUMBER acquisition and then repeat all the other acquisitions

Ref.	Function	Description	Notes
3	**LEARN LIFT POT**	Lifting potentiometer acquisition **LEARNING** **LEARN LIFT POT** ⬅ ➡ (OK) To enter the menu and start acquisition **LEARN LIFT POT** **PULL LIFT LEVER TO THE END PED AND RELASE THEN PRESS OK** Pull the lifting lever to to the limit and release slowly (OK) To end acquisition **LEARN LIFT POT** **LEARN SUCCESSFUL** [OUT] To return to the first screen	The lifting potentiometer can be acquired only on versions with electro-proportional distributor The lifting potentiometer acquisition must be repeated whenever the MCB card or potentiometer is replaced. If the display does not memorize the acquisition data, repeat the SERIAL NUMBER acquisition and then repeat all the other acquisitions

Ref.	Function	Description	Notes
4	**ADJUST BATTERY**	Parameter used to set the voltmeter inside the traction logic unit for reading the battery voltage 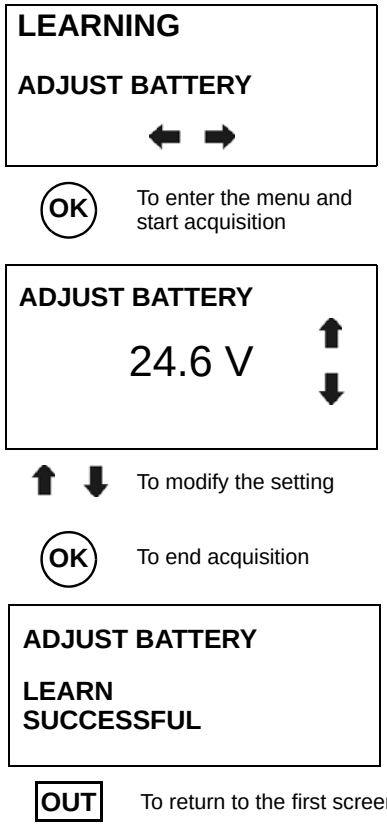	See chapter 1 paragraph ADJUSTING THE BATTERY VOLTAGE If the display does not memorize the acquisition data, repeat the SERIAL NUMBER acquisition and then repeat all the other acquisitions

Ref.	Function	Description	Notes
5	**ADJUST CAPACITOR**	Parameter used to set the voltmeter inside the traction logic unit for reading the battery voltage 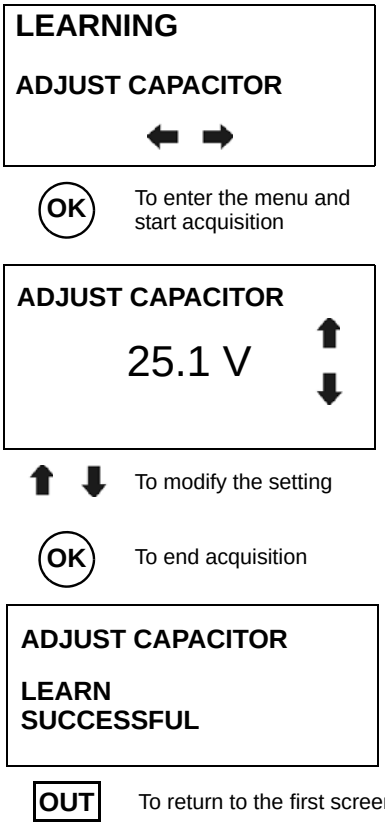	See chapter 1 paragraph ADJUSTING THE BATTERY VOLTAGE If the display does not memorize the acquisition data, repeat the SERIAL NUMBER acquisition and then repeat all the other acquisitions

Ref.	Function	Description	Notes
6	**SET STEER ZERO**	Steering potentiometer acquisition in central position (direction wheels straight) **LEARNING** **SET STEER ZERO** ⬅ ➡ (OK) To enter the menu and start acquisition **SET STEER ZERO** **PLEASE TURN THE WHEELS STRAIGHT THEN PRESS OK** To center the steering wheels (OK) To end acquisition **SET STEER ZERO** **LEARN SUCCESSFUL** **MATCH X.XX V** **OUT** To return to the first screen	The steering potentiometer acquisition must be repeated whenever the traction logic unit or potentiometer is replaced. If the display does not memorize the acquisition data, repeat the SERIAL NUMBER acquisition and then repeat all the other acquisitions

Ref.	Function	Description	Notes
7	**SET STEER RIGHT**	Steering potentiometer acquisition in right limit switch position (steering wheels turned fully to the right) **LEARNING** **SET STEER RIGHT** ⬅ ➡ OK To enter the menu and start acquisition **SET STEER RIGHT** **PLEASE TURN THE WHEELS TO RIGHT THEN PRESS OK** To place the steering wheels fully to the right OK To end acquisition **SET STEER RIGHT** **LEARN SUCCESSFUL** **MATCH X.XX V** OUT To return to the first screen	The steering potentiometer acquisition must be repeated whenever the traction logic unit or potentiometer is replaced. If the display does not memorize the acquisition data, repeat the SERIAL NUMBER acquisition and then repeat all the other acquisitions

Ref.	Function	Description	Notes
8	**SET STEER LEFT**	Steering potentiometer acquisition in left limit switch position (steering wheels turned fully to the left) **LEARNING** **SET STEER LEFT** ⬅ ➡ OK To enter the menu and start acquisition **SET STEER LEFT** **PLEASE TURN THE WHEELS TO LEFT THEN PRESS OK** To place the steering wheels fully to the left OK To end acquisition **SET STEER LEFT** **LEARN SUCCESSFUL** **MATCH X.XX V** OUT To return to the first screen	The steering potentiometer acquisition must be repeated whenever the traction logic unit or potentiometer is replaced. If the display does not memorize the acquisition data, repeat the SERIAL NUMBER acquisition and then repeat all the other acquisitions

DEFAULT RST

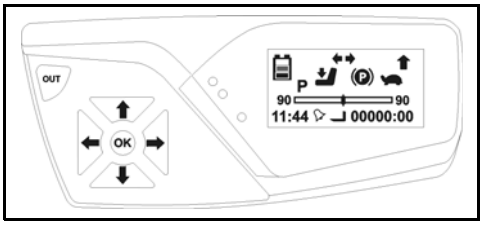

Enter the service menu
[see SERVICE MENU PASSWORD INSERTION PROCEDURE paragraph]

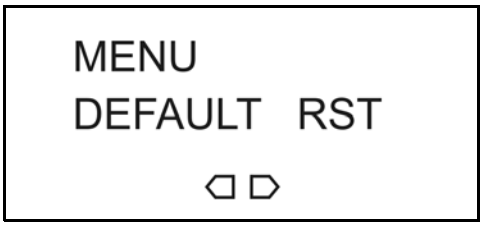

Press ➡ till reach the DEFAULT RST menu
Press **OK** to enter the menu

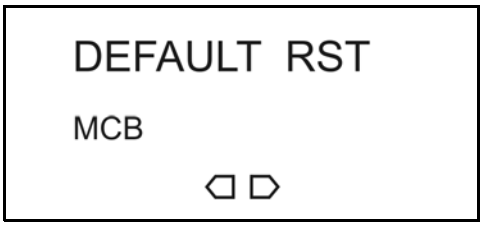

Use buttons ⬅ and ➡ to navigate the menu

Press **OK** to select the required parameter

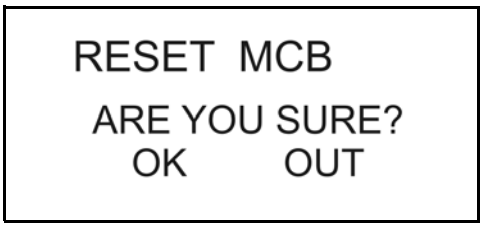

Press **OK** to save

Press OK to exit without saving

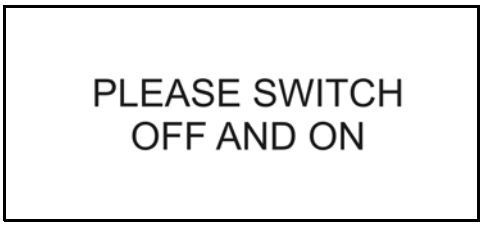

Turn the truck off and on again

Ref.	Function	Description	Notes
1	**MCB**	Used to reset the MCB board	See paragraph NECESSARY ADJUSTMENTS AFTER A HARDWARE COMPONENT REPLACED
2	**ARMREST**	Used to reset the arm rest card	
3	**TRACTION**	Used to reset the traction logic	
4	**MHYRIO UNIT**	Used to reset the MHYRIO card	
5	**PUMP**	This function allows to reset the PUMP logic	
6	**DISPLAY**	This function allows to reset the DISPLAY	

DEFAULT RST MENU MAP

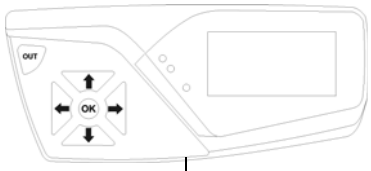

PLEASE INSERT
SERV. PASSWORD

SOFT VERS

PARAM CHANGE

TRUCK CONF

SERVICE RENT

PSW MODIFY

TESTER

ALARMS

LEARNING

DEFAULT RST

1 - MCB	4 - MHYRIO
2 - ARMET	5 - PUMP
3 - TRACTION	6 - DISPLAY

“INCORRECT START“ MANAGEMENT

The “INCORRECT START“ are recoverable errors, generated by:
- an incorrect starting procedure
- an incorrect sequence of use of the controls

These alarms block truck functioning temporarily, generating an alarm icon on the display.

Summary table of the “INCORRECT START“

Icon	Description	Configuration.	Notes
	Direction pedal pressed during the starting procedure	Double pedal system or balanced pedal system	Traction: NO Lifting: YES:
	Manual inversor in direction position	Pedal system single	Traction: NO Lifting: YES:
	Hydraulic request during the starting procedure	BOARD microswitch	Traction: NO Lifting: NO
	Hydraulic request during the starting procedure	Electric distributor	Traction: NO Lifting: NO
	Double drive request signal	Double pedal system or balanced pedal system	Traction: NO Lifting: YES:
	Direction request with parking brake on	All	Traction: NO Lifting: NO
	Seat micro opened during movement or hydraulic request	All	Traction: NO Lifting: NO
	Brakes liquid level warning light: the brakes liquid is going to finish; the The signal is shown when the brakes oil level is too low. In case of alarm the truck reduces the maximum speed to about 5Km/ h	All	Traction: YES: Lifting: YES:

TROUBLESHOOTING

Page

CONNECTOR CHECK 4-2
BEFORE TROUBLESHOOTING 4-2
WIRE HARNESS AND CONNECTOR INSPECTION PROCEDURE 4-3
INSULATION CONTROL PROCEDURE 4-5
MOTOR WINDING CONTROL PROCEDURE 4-5
MECHANIC DISTRIBUTOR SYSTEM CONFIGURATION 4-6
ELECTRIC DISTRIBUTOR SYSTEM CONFIGURATION 4-7
DIAGNOSIS CODE LIST 4-8
WHEN AN ERROR CODE IS DISPLAYED 4-14
TRACTION LOGIC UNIT 4-14
LIFTING LOGIC UNIT 4-30
MHYRIO LOGIC UNIT 4-46
ARMREST CARD 4-53
DASHBOARD 4-58
I/O BOARD 4-62

CONNECTOR CHECK

BEFORE TROUBLESHOOTING

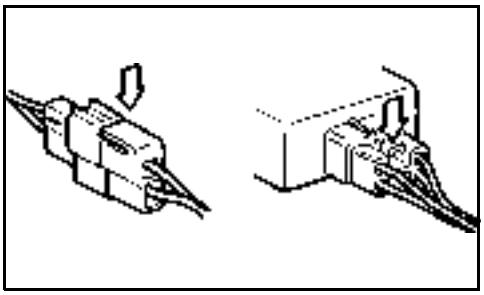

1. Disconnect the battery plug before connecting or disconnecting each connector or terminal
2. When disconnecting a connector, do not pull it at the harness but hold the connector itself and pull it after unlocking it. To connect, push the connector fully until it is locked in position

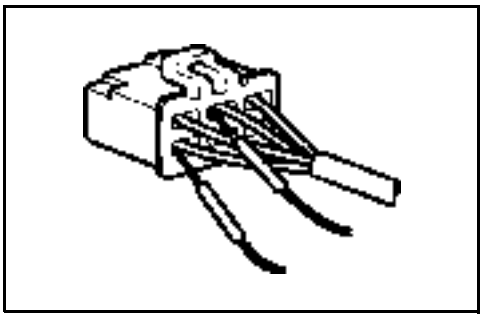

3. Bring a tester probe into contact with a connector terminal from the rear side of the coupler (harness side)
4. If insertion from the rear side is impossible, as in the case of a waterproof connector, bring the tester probe carefully into contact with the terminal so as not to cause deformation of the connector terminal
5. Do not touch connector terminals directly with your hand
6. When bringing tester probes into contact with live terminals, prevent two tester probes from coming into contact with each other.

WIRE HARNESS AND CONNECTOR INSPECTION PROCEDURE

When any trouble occurs, first inspect the connectors and wire harness of the related circuit according to the following procedure:

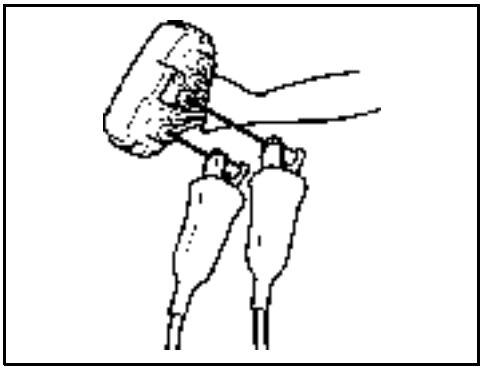

Continuity check

1. Disconnect the connectors at both ends of the corresponding harnesses
2. Measure the resistance between corresponding terminals of the connectors at both ends.
   Standard: 10 Ω or less

Remarks:
Measure while lightly shaking the wire harness up and down and sideways.

Reference:
Open circuit at the wire harness occurs rarely partway through a vehicle wiring but mostly at connectors.
Inspect especially the sensor connectors with sufficient care

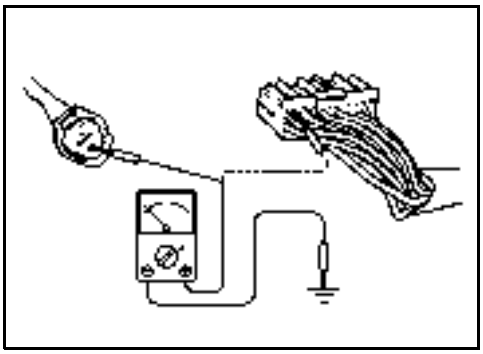

Short circuit check

1. Disconnect the connectors at both ends of the corresponding harness
2. Measure the resistance between the corresponding connector terminal and negative. Always inspect the connectors at both ends
   Standard: 10 MΩ or more

Remarks:
Measure while lightly shaking the wire harness up and down and sideways.

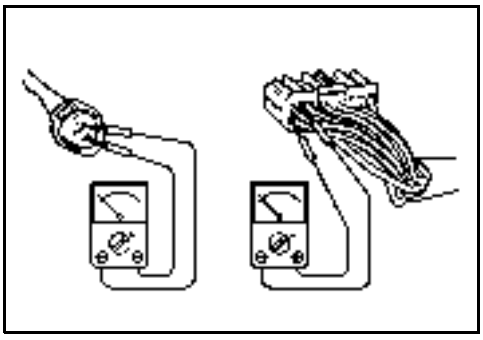

3. Measure the resistance between a terminal corresponding to the connector terminal and N1. Always inspect the connectors at both ends.
   Standard: 10 MΩ or more

Remarks:
The wiring may short-circuit due to pinching by the body or defective clamping.

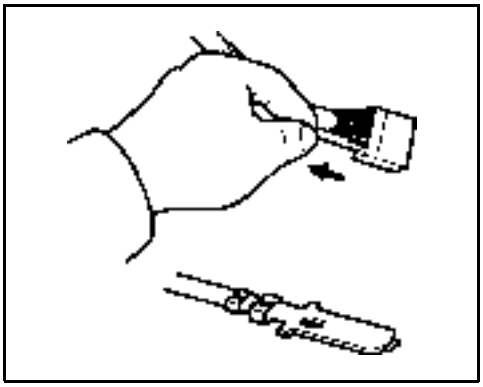

Visual and contact pressure checks

- Disconnect the connectors at both ends of the corresponding harnesses
- Visually inspect that there is neither rust nor foreign matter trapped at connector terminals
- Inspect that there is no loosening or damage at the locked portion. Also, lightly pull the wire harness from the connector to check that it does not come off
- Insert a male terminal the same as that of the terminal to check into a female connector and check the force of extraction.
  Defective contact may exist at a terminal where the extracting force is less than that of other terminals

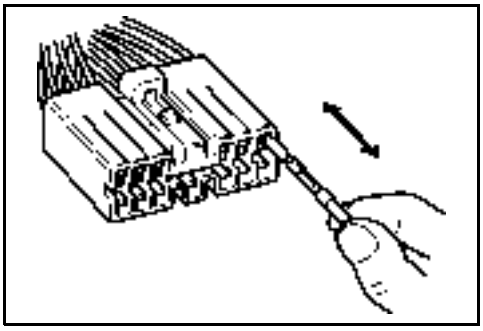

Remarks:
Notes:Even if there is rust or foreign matter trapped at the terminal, or the contact pressure between male and female terminals is low, abnormal contact condition may be changed to normal by disconnecting and reconnecting the connector. In that case, repeat connector connection and disconnection several times. If defect is perceived even once, terminal contact may be defective.

The above information, concerning the inspection of the connectors, are referred to specific type as shown in the drawing. The same procedure must be apply for all types of machine connectors.

INSULATION CONTROL PROCEDURE

When any trouble occurs, first inspect the truck insulation and its components, according to the following procedure:

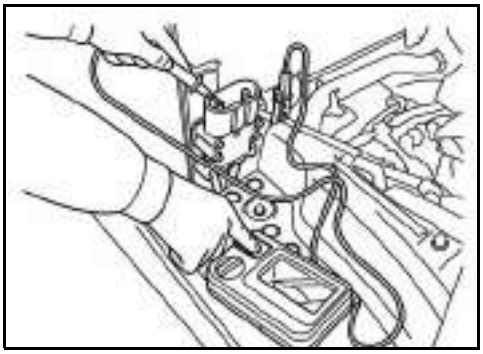

Truck insulation check

1. Disconnect the battery from the truck
2. Measure the resistance between the truck plug positive and the chassis (in an unpainted point)
   Standard: 10 MΩ or more
3. Measure the resistance between the truck plug negative and the chassis (in an unpainted point)
   Standard: 10 MΩ or more

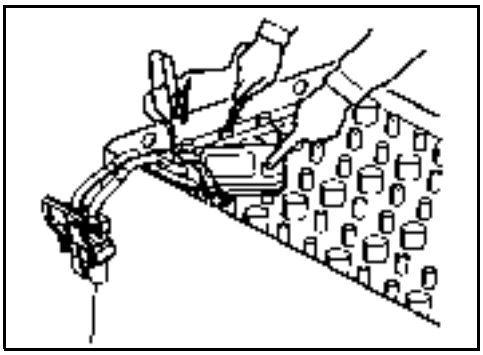

Battery insulation check

1. Disconnect the battery from the truck
2. Measure the resistance between the battery plug positive and the case (in an unpainted point)
   Standard: 10 MΩ or more
3. Measure the resistance between the battery plug negative and the case (in an unpainted point)
   10 MΩ or more

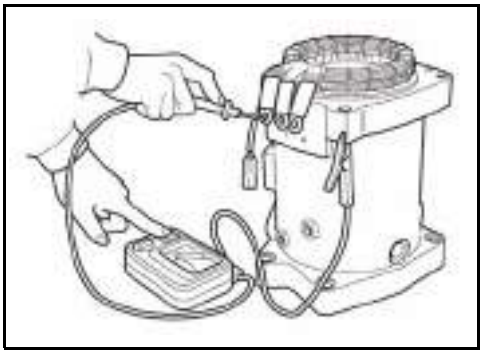

Motor insulation check

1. Disconnect the battery from the truck
2. Measure the resistance between a phase and the motor body (in an unpainted point)
   Standard: 10 MΩ or more
3. Turning the rotor slowly by hand, measure the resistance between a phase and the motor body (in an unpainted point)
   Standard: 10 MΩ or more

MOTOR WINDING CONTROL PROCEDURE

When any trouble occurs, check the state of the motors, following the procedure described below:

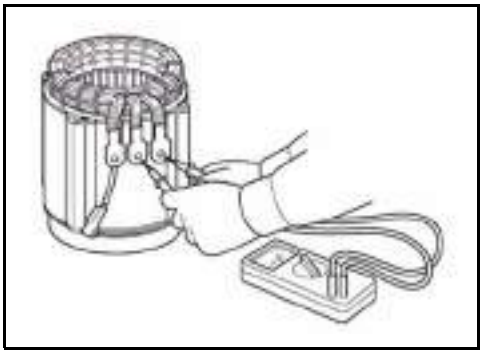

Motor phase continuity check

1. Disconnect the battery from the truck
2. Disconnect the three power cables
3. Check the continuity between the motor cables

   Standard: U-V 0 Ω
   V-W 0 Ω
   U-W 0 Ω

MECHANIC DISTRIBUTOR SYSTEM CONFIGURATION

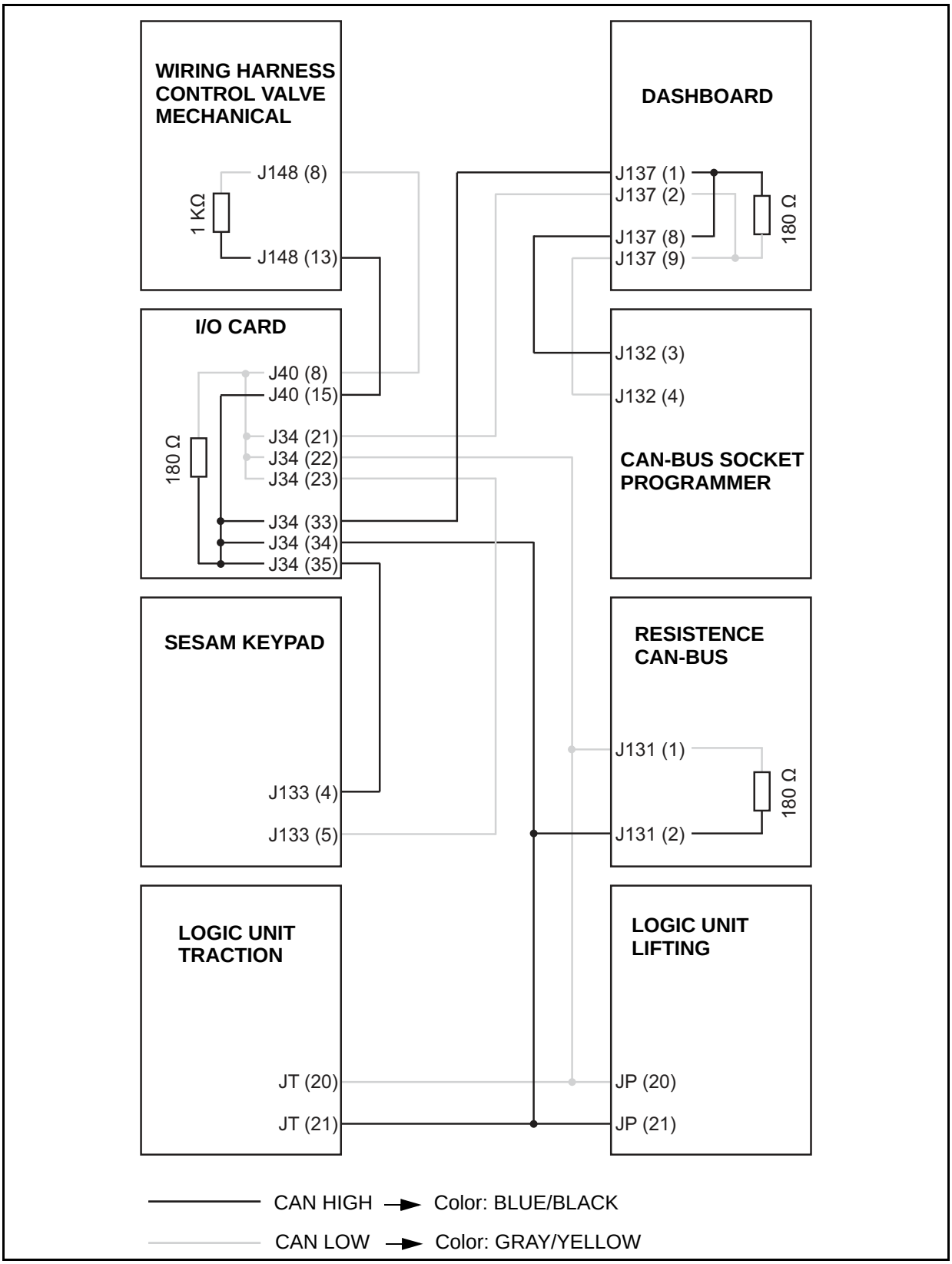

ELECTRIC DISTRIBUTOR SYSTEM CONFIGURATION

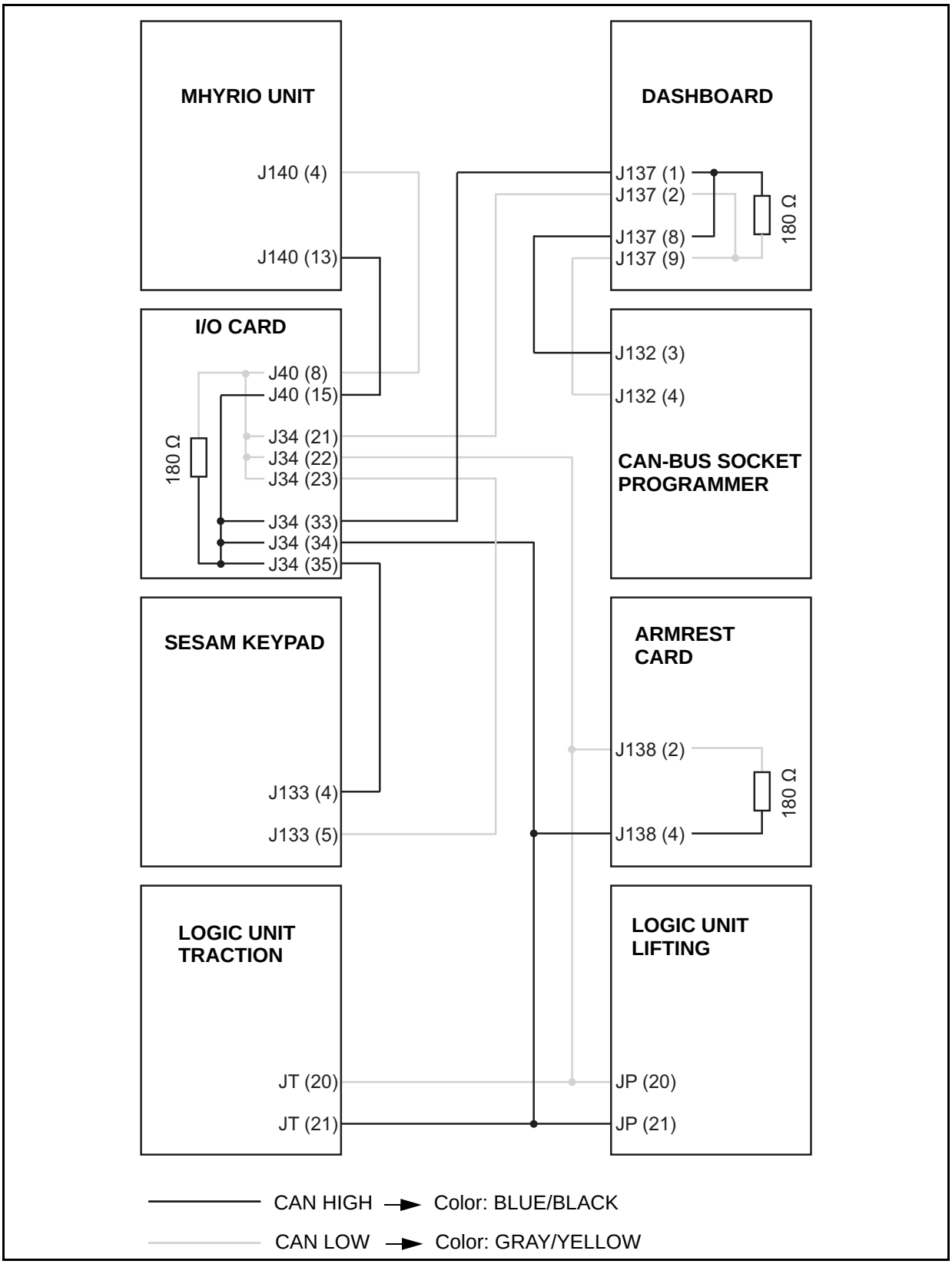

DIAGNOSIS CODE LIST

When an Error Code is Displayed			
Code	Alarm specification	Error mode	Page
01	WATCHDOG	TRACTION LOGIC UNIT: Self-diagnostic test	4-14
02	EEPROM KO	TRACTION LOGIC UNIT: Fault in the memory area	4-14
03	LOGIC FAILURE #3	TRACTION LOGIC UNIT: Logic defect	4-14
04	LOGIC FAILURE #2	TRACTION LOGIC UNIT: Fault in the hardware section	4-15
05	LOGIC FAILURE #1	TRACTION LOGIC UNIT: Protection from undervoltage/overvoltage	4-15
06	VMN LOW	TRACTION LOGIC UNIT: Failure in the VMN test	4-16
07	VMN HIGH	TRACTION LOGIC UNIT: Failure in the VMN test	4-17
08	CONTACTOR OPEN	TRACTION LOGIC UNIT: Failure on the contactor	4-18
09	STBY I HIGH	TRACTION LOGIC UNIT: Failure on the current sensor	4-18
10	CAPACITOR CHARGE	TRACTION LOGIC UNIT: Capacitors not charged	4-19
11	HIGH TEMPERAURE	TRACTION LOGIC UNIT: Logic unit temperature higher than 85°C	4-19
12	MOTOR TEMPERATURE	TRACTION LOGIC UNIT: Traction motor temperature higher than 140°C	4-19
13	ENCODER ERROR	TRACTION LOGIC UNIT: Encoder circuit fault	4-20
14	THERMIC SENSOR KO	TRACTION LOGIC UNIT: Logic unit thermal detector out of range	4-21
15	SAFETY IN	TRACTION LOGIC UNIT: Logic unit arrest	4-21
16	CAN BUS KO	TRACTION LOGIC UNIT: Reads the communication of another card	4-21
17	WAITING FOR NODE	TRACTION LOGIC UNIT: Information delay	4-22
18	AUX OUTPUT KO	UNUSED	4-22
19	DRIVER SHORTED	TRACTION LOGIC UNIT: Failure on the contactor driver	4-22
20	CONTACTOR DRIVER	TRACTION LOGIC UNIT: Failure on the contactor driver	4-22
21	AUX COIL SHORTED	TRACTION LOGIC UNIT: Failure on the contactor driver	4-23
22	VACC NOT OK	TRACTION LOGIC UNIT: Steering potentiometer setting not correct	4-23
23	PUMP INCORRECT START	UNUSED	4-23
24	SEAT MISMATCH	TRACTION LOGIC UNIT: Does not see the seat microswitch closed	4-24
25	WRONG SET BATTERY	TRACTION LOGIC UNIT: Battery voltage out of range	4-24
26	REMOTE INPUT	UNUSED	4-24
27	BAD STEER 0-SET	UNUSED	4-24
28	STEER SENSOR KO	TRACTION LOGIC UNIT: Potentiometer error	4-24
29	FORW + BACK	UNUSED	4-24
30	UNUSED	UNUSED	4-25

When an Error Code is Displayed			
Code	Alarm specification	Error mode	Page
31	WATCHDOG	LIFTING LOGIC UNIT: Self-diagnostic test	4-30
32	EEPROM KO	LIFTING LOGIC UNIT: Fault in the memory area	4-30
33	LOGIC FAILURE #3	LIFTING LOGIC UNIT: Logic defect.	4-30
34	LOGIC FAILURE #2	LIFTING LOGIC UNIT: Fault in the hardware section	4-31
35	LOGIC FAILURE #1	LIFTING LOGIC UNIT: Protection from undervoltage/overvoltage	4-31
36	VMN LOW	LIFTING LOGIC UNIT: Failure in the VMN test	4-32
37	VMN HIGH	LIFTING LOGIC UNIT: Failure in the VMN test	4-33
38	CONTACTOR OPEN	LIFTING LOGIC UNIT: Failure on the contactor	4-34
39	STBY I HIGH	LIFTING LOGIC UNIT: Failure on the current sensor	4-34
40	CAPACITOR CHARGE	LIFTING LOGIC UNIT: Capacitors not charged	4-35
41	HIGH TEMPERAURE	LIFTING LOGIC UNIT: Logic unit temperature higher than 85°C	4-35
42	MOTOR TEMPERATURE	LIFTING LOGIC UNIT: Traction motor temperature higher than 140°C	4-35
43	ENCODER ERROR	LIFTING LOGIC UNIT: Encoder circuit fault	4-36
44	THERMIC SENSOR KO	LIFTING LOGIC UNIT: Logic unit thermal detector out of range	4-37
45	SAFETY IN	LIFTING LOGIC UNIT: Protection activated	4-37
46	CAN BUS KO	LIFTING LOGIC UNIT: Reads the communication of another card	4-37
47	WAITING FOR NODE	LIFTING LOGIC UNIT: It is detecting a delay in data transfer	4-38
48	AUX OUTPUT KO	UNUSED	4-38
49	DRIVER SHORTED	LIFTING LOGIC UNIT: Failure on the contactor driver	4-39
50	CONTACTOR DRIVER	LIFTING LOGIC UNIT: Failure on the contactor driver	4-39
51	AUX COIL SHORTED	LIFTING LOGIC UNIT: Failure on the contactor driver	4-39
52	VACC NOT OK	LIFTING LOGIC UNIT: Steering potentiometer setting not correct	4-39
53	PUMP INCORRECT START	LIFTING LOGIC UNIT: Seat open microswitch	4-39
54	SEAT MISMATCH	LIFTING LOGIC UNIT: Seat open microswitch during traction	4-40
55	WRONG SET BATTERY	LIFTING LOGIC UNIT: Battery voltage out of range	4-40
56	REMOTE INPUT	UNUSED	4-40
57	BAD STEER 0-SET	UNUSED	4-40
58	STEER SENSOR KO	LIFTING LOGIC UNIT: Failure on the contactor driver	4-40
59	FORW + BACK	UNUSED	4-40
81	PUMP INCORRECT START	I/O CARD: Incorrect start	4-63
82	UNUSED	UNUSED	4-63
83	PEDAL WIRE KO	I/O CARD: Failure in the signal of the accelerator potentiometer at rest	4-63
84	BAD MICRO SWITCH	I/O CARD: General alarm of broken microswitch	4-63
85	UNUSED	UNUSED	4-63

When an Error Code is Displayed			
Code	Alarm specification	Error mode	Page
86	BAD VACC	I/O CARD: Failure in the signal of the accelerator potentiometer at rest	4-64
87	ERR SEAT	I/O CARD: Does not see the seat microswitch closed.	4-64
88	UNUSED	UNUSED	4-64
89	PARKING SELECTED	I/O CARD: Failure on parking brake	4-64
90	UNUSED	UNUSED	4-64
91	CONF ERROR	I/O CARD: Configuration problem	4-65
92	BOOT ERROR	I/O CARD: Comunication problem	4-66
93	NOT REP ERROR	I/O CARD: Comunication problem	4-66
94	CHKSUM ERROR	I/O CARD: Replace the I/O Control Board	4-66
0A	SAFETY OUTPUT	TRACTION LOGIC UNIT: Logic safety driver failure	4-25
0B	SLIP PROFILE	TRACTION LOGIC UNIT: Error in the memory data	4-25
0C	ANALOG INPUT	TRACTION LOGIC UNIT: Control internal error	4-25
0D	HARDWARE FAULT	TRACTION LOGIC UNIT: Control internal error	4-25
0E	POWER MOS SHORTED	TRACTION LOGIC UNIT: Power circuit failure	4-26
0F	FLASH CHECKSUM	TRACTION LOGIC UNIT: Control internal error	4-26
1A	SOFTWARE ERROR	TRACTION LOGIC UNIT: Memory error	4-26
1B	THERMIC MOT KO	TRACTION LOGIC UNIT: Motor temperature sensor disconnected	4-27
1C	ENCODER LOCK	TRACTION LOGIC UNIT: Motor encoder disconnected	4-27
1D	UNUSED	UNUSED	4-27
1E	CONTACTOR CLOSED	TRACTION LOGIC UNIT: Failure on the contactor driver	4-28
2A	CHOPPER NOT CONF	UNUSED	4-28
2B	STEER WIRE KO	TRACTION LOGIC UNIT: Steering potentiometer failure	4-28
2C	DATA ACQUISITION	TRACTION LOGIC UNIT: Logic in data acquisition phase.	4-28
2D	WRONG 0 VOLT	TRACTION LOGIC UNIT: Control internal error	4-29
2E	HANDBRAKE	TRACTION LOGIC UNIT: Brake microswitch failure	4-29
2F	WRONG RAM MEMORY	TRACTION LOGIC UNIT: Protection against electrostatic charges activated	4-29
3A	SAFETY OUTPUT	LIFTING LOGIC UNIT: Logic stop	4-41
3B	SLIP PROFILE	LIFTING LOGIC UNIT: Error in the memory data	4-41
3C	ANALOG INPUT	LIFTING LOGIC UNIT: Control internal error	4-41
3D	HARDWARE FAULT	LIFTING LOGIC UNIT: Control internal error	4-41
3E	POWER MOS SHORTED	LIFTING LOGIC UNIT: Power circuit failure	4-42
3F	FLASH CHECKSUM	LIFTING LOGIC UNIT: Control internal error	4-42
4A	SOFTWARE ERROR	LIFTING LOGIC UNIT: Error in the memory data	4-42
4B	THERMIC MOT KO	LIFTING LOGIC UNIT: Motor sensor disconnected	4-43
4C	ENCODER LOCK	LIFTING LOGIC UNIT: Motor encoder disconnected	4-43

When an Error Code is Displayed			
Code	Alarm specification	Error mode	Page
4D	UNUSED	UNUSED	4-43
4E	CONTACTOR CLOSED	LIFTING LOGIC UNIT: Failure on the contactor driver	4-44
5A	CHOPPER NOT CONF	UNUSED	4-44
5B	STEER WIRE KO	LIFTING LOGIC UNIT: Failure on the contactor driver	4-44
5C	DATA ACQUISITION	LIFTING LOGIC UNIT: Logic in data acquisition phase	4-44
5D	WRONG 0 VOLT	LIFTING LOGIC UNIT: Control internal error	4-45
5E	HANDBRAKE	LIFTING LOGIC UNIT: Brake microswitch failure	4-45
5F	WRONG RAM MEMORY	LIFTING LOGIC UNIT: Protection activated against electrostatic charges	4-45
8A	PARAM LOAD ERROR	I/O CARD: Problem in the hardware circuits	4-64
8B	TRUCK IN ALARM	I/O CARD: General alarm	4-65
8C	TRUCK STUFFING ERROR	I/O CARD: Comunication problem	4-65
8D	UNUSED	UNUSED	4-65
8E	UNUSED	UNUSED	4-65
8F	FW + BW	I/O CARD: Double request activated.	4-65
A1	EEPROM KO	MHYRIO LOGIC UNIT: Defect in the memory area	4-46
A2	EV DRIVER SHORT	MHYRIO LOGIC UNIT: One of the on/off valves driver is shorted circuit	4-46
A3	CAN BUS KO	MHYRIO LOGIC UNIT: Can bus communication error	4-46
A4	FF VALVES	MHYRIO LOGIC UNIT: Problem is in the hardware circuit	4-47
A5	UNUSED	UNUSED	4-47
A6	EVPG1 DRIV SHORT	MHYRIO LOGIC UNIT: One of the valve controls is in short circuit	4-47
A7	EVPG2 DRIV SHORT	MHYRIO LOGIC UNIT: One of the valve controls is in short circuit	4-48
A8	EVPG3 DRIV SHORT	MHYRIO LOGIC UNIT: One of the valve controls is in short circuit	4-48
A9	EVPG4 DRIV SHORT	MHYRIO LOGIC UNIT: One of the valve controls is in short circuit	4-48
AA	WRONG SET BATTERY	MHYRIO LOGIC UNIT: Battery voltage out of range	4-49
AB	HI SIDEDRIVER KO	MHYRIO LOGIC UNIT: Problem is in the hardware circuit	4-49
AC	EVPG1 DRIVER KO	MHYRIO LOGIC UNIT: One of the valve controls is open	4-49
AD	EVPG2 DRIVER KO	MHYRIO LOGIC UNIT: One of the valve controls is open	4-50
AE	EVPG3 DRIVER KO	MHYRIO LOGIC UNIT: One of the valve controls is open	4-50
AF	EVPG4 DRIVER KO	MHYRIO LOGIC UNIT: One of the valve controls is open	4-50
B0	COIL SHORTED	MHYRIO LOGIC UNIT: Problem is in the hardware circuit	4-51
B1	UNDER VOLTAGE	MHYRIO LOGIC UNIT: Undervoltage condition	4-51
B2	EVP DRIVER KO	MHYRIO LOGIC UNIT: The valve control is open	4-51
B3	EV DRIVER KO	MHYRIO LOGIC UNIT: One of the valve controls is open	4-52

When an Error Code is Displayed			
Code	Alarm specification	Error mode	Page
B4	WATCHDOG	MHYRIO LOGIC UNIT: Self-diagnostic test	4-52
B5	EVP DRIVER SHORTED	MHYRIO LOGIC UNIT: The valve driver is in short circuit	4-52
C1	STOP OPEN	I/O CARD: Failure on the stop lights	4-66
C2	ANT_OPEN or POST_OPEN	I/O CARD: Failure on front or rear light circuit	4-66
C3	UNUSED	UNUSED	4-67
C4	RETRO OPEN	I/O CARD: Failure on the reverse lights.	4-67
C5	TILT_LOCK_FAULT	I/O CARD: Tilt solenoid valve coil failure	4-67
C6	LOWERING_LOCK_ FAULT	I/O CARD: Lifting solenoid valve coil failure	4-67
C7	STATIONARY_ BRAKING_BUZZER_ FAULT	I/O CARD: Alarm buzzer fault	4-67
D1	TRAC KO	DASHBOARD: The traction logic unit is not detected	4-58
D2	I/O CARD KO	DASHBOARD: The I/O card is not detected	4-58
D3	UNUSED	UNUSED	4-58
D4	PUMP KO	DASHBOARD: The lifting logic unit is not detected	4-59
D5	MHYRIO KO	DASHBOARD: The mhyrio logic unit is not detected	4-59
D6	JOY KO	DASHBOARD: The arm rest board is not detected	4-59
D7	BRAKE LEVEL	DASHBOARD: Brakes oil level low	4-60
D8	ERROR READ PIN	DASHBOARD: Configuration error with the I/O card	4-60
D9	DHU KO	DASHBOARD: The DHU board is not detected	4-60
DA	SHOCK LOCKOUT	DASHBOARD: Unused	4-60
BOM	UNUSED	UNUSED	4-61
DC	UNUSED	UNUSED	4-61
DD	SAS KO	DASHBOARD: The SAS board is not detected	4-61
DE	UNUSED	UNUSED	4-61
DF	EEPROM ERROR	DASHBOARD: Memory fault	4-61
E1	PUMP INCORRECT START	ARMREST CARD: Incorrect starting procedure	4-53
E1	PUMP INCORRECT START	I/O CARD: Incorrect starting procedure	4-62
E2	BAD LIFT POT	ARMREST CARD: Failure on the lifting potentiometer	4-54
E2	BAD LIFT POT	I/O CARD: Failure on the lifting potentiometer.	4-62
E3	BAD TILT POT	ARMREST CARD: Failure on the tilting potentiometer	4-54
E4	BAD SIDESHIFT POT	ARMREST CARD: Failure on the tilting potentiometer	4-55
E5	BAD IV POT	ARMREST CARD: 4th way potentiometer failure	4-55
E6	BAD V POT	ARMREST CARD: 5th way potentiometer failure	4-56
E7	DEFAULT RESTORED	ARMREST CARD: Alarm	4-56

When an Error Code is Displayed			
Code	Alarm specification	Error mode	Page
E8	INVALID RESTORE STATE	ARMREST CARD: Failure of the restore default parameter operation	4-56
E9	EEPROM INCONSISTENCY	ARMREST CARD: Alarm	4-56
EA	MHYRIO OR PUMP ALARM	ARMREST CARD: Alarm in present in both Mhyrio logic unit and lifting logic unit	4-57
EB	UNUSED	UNUSED	4-57
EC	CHKSUM ERROR	ARMREST CARD: Replace the Armrest Board	4-57
ED	MHYRIO STUFFING ERROR	ARMREST CARD: Comunication problem	4-57
EE	PUMP STUFFING ERROR	ARMREST CARD: Comunication problem	4-57
EE	PUMP STUFFING ERROR	I/O CARD: Comunication problem	4-63
EF	FW + BW	ARMREST CARD: Incorrect starting procedure	4-57

WHEN AN ERROR CODE IS DISPLAYED
TRACTION LOGIC UNIT

01	**WATCHDOG**

Condition for error detection

The test is made in both running and standby. It is a self-diagnosing test within the logic.
This alarm could also be caused by the can-bus malfunctioning.
Verify:
- Truck insulation (see paragraph INSULATION CONTROL PROCEDURE)
- The can-bus connections
- Replace the electronic control unit

02	**EEPROM KO**

Condition for error detection

Defect in area of memory storing settings; alarm disables operation of the machine, the unit loads the default settings.
Use the function RESET to reload the default parameters (see paragraph DEFAULT RST).
- If the error persists when the machine is switched back on, install the last version of the software using the programmer.
- If the defect persists when the machine is switched back on again, replace the module.
- If the alarm disappears then the previously saved parameters will be deleted and the default parameters of the electronic control unit will automatically be loaded.

03	**LOGIC FAILURE #3**

Condition for error detection

Logic defect.
- Check the truck insulation (see paragraph INSULATION CONTROL PROCEDURE)
- Replace the logic unit.

04	LOGIC FAILURE #2

Condition for error detection

Fault in the hardware section of the logic board which manages the phase voltage feedback.
The alarm appears also if the CT2 contactor is open during operation.
Check:
- the pins 1 and 14 of connector J50 and connections P6 and P5
- the contactor coil (45 Ohm)
- check the truck insulation (see paragraph INSULATION CONTROL PROCEDURE)
- the state of the power cables connected to the motor (tightness of connections, sheath wear, connection stapling)
- replace the logic unit.

05	LOGIC FAILURE #1

Condition for error detection

This alarm signals that the interruption of protection against under voltage /over voltage has been triggered.
UNDER voltage: the logic unit controls the key input (pin 1, connector JT, cable R04 of the logic). If the voltage has a low peak, the alarm is signalled.
OVER voltage: the logic unit controls the voltage on the internal condensers. If the voltage has a hight peak during the braking, the alarm is signalled.

The possible reasons are:

a. Under voltage / over voltage of the battery, or loss of voltage after the ignition key or after the battery connector.

b. If the alarm is signaled when the vehicle is switched on and it appears in combination with alarm 35 of the lifting logic, check:
- the key switch (false contact, rusted contacts on the key cylinder)
- the battery plug-socket (false contact, damaged contacts)
- the state of the battery elements (see chapter 01 BATTERY)

c. The alarm appears also when one or more motor phases do not present a correct isolation at a movement request.
- check the motor insulation (see paragraph INSULATION CONTROL PROCEDURE).
- the insulation of the power cables connected to the motor (tightness of connections, sheath wear, connection stapling)
- check that the motor phases (U-V-W) are shorted among them (see paragraph MOTOR WINDING CONTROL PROCEDURE)

d. Defect in the logic hardware section that controls the protection against the overvoltage.
Logic defect. Replace the logic unit.

Reference wiring diagram page 2/7 (chapter 17, section WIRING DIAGRAMS)

06	VMN LOW

Condition for error detection

Failure in the VMN test.
The test begins at the switching on; check the connections of the 3 supplying cables from the logic unit to the traction motor, the status of the cables and the status of the coil of the CT2 contactor (45 Ohm). If the coil is interrupted the truck will signal the alarm at the switching on. If the coil value is ok, proceed following one of the test below described in order to establish if the failure is produced by a cause internal or external to the logic:

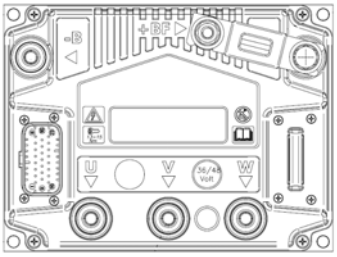

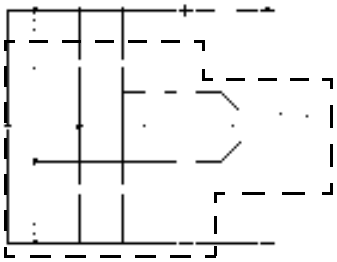

TEST 1

- Operate the parking brake and switch off the machine
- Open the compartment and disconnect the battery
- Check the power cables on the motor are tight
- Check the power cables on the logic unit are tight
- Check the continuity values between the following points on the control unit using a tester:

Values on the control with connected motor		
Red cap	Black cap	Resistance
U	+ BF	~ 7 Kohm
V	+ BF	~ 7 Kohm
W	+ BF	~ 7 Kohm
U	- B	~ 7 Kohm
V	- B	~ 7 Kohm
W	- B	~ 7 Kohm
U	V	0 ohm
V	W	0 ohm
W	U	0 ohm

Values on the control with disconnected motor		
Red cap	Black cap	Resistance
U	+ BF	~ 18 Kohm
V	+ BF	~ 16 Kohm
W	+ BF	~ 18 Kohm
U	- B	~ 16 Kohm
V	- B	~ 14 Kohm
W	- B	~ 16 Kohm
U	V	~ 25 Kohm
V	W	~ 33 Kohm
W	U	~ 25 Kohm

If very different values are measured compared to those referred to in the above table, disconnect all the power cables from the logic unit and repeat the measurements

If an open circuit is detected, replace the logic unit

Self-diagnostic

Connect the drive logic unit to the pump motor and check whether the display shows the alarm code "06".
YES: replace the logic unit
If alarm “36“ appears check the motor state (see paragraph INSULATION CONTROL PROCEDURE and MOTOR WINDING CONTROL PROCEDURE)

07	VMN HIGH

Condition for error detection

Failure in the VMN test.
This test starts when the ignition key is turned ON and there is no current consumption (machine stationary) The alarm appears if the power circuit connections are open; check the connection of the 3 power cables from the logic unit to the traction motor and the cables condition.

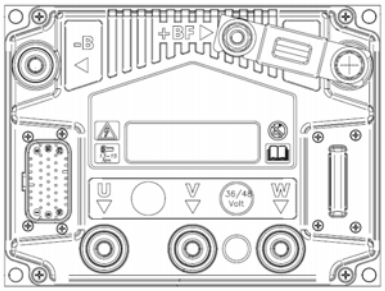

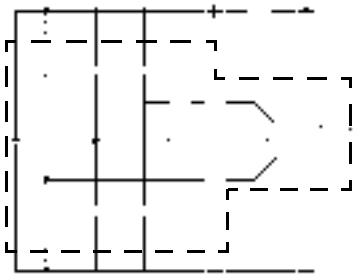

To determine the cause of the fault, proceed by running one of the tests described below:
TEST 1

- Operate the parking brake and switch off the machine
- Open the compartment and disconnect the battery
- Check the power cables on the motor are tight
- Check the power cables on the logic unit are tight
- Check the continuity values between the following points on the control unit using a tester:

Values on the control with connected motor		
Red cap	Black cap	Resistance
U	+ BF	~ 7 Kohm
V	+ BF	~ 7 Kohm
W	+ BF	~ 7 Kohm
U	- B	~ 7 Kohm
V	- B	~ 7 Kohm
W	- B	~ 7 Kohm
U	V	0 ohm
V	W	0 ohm
W	U	0 ohm

Values on the control with disconnected motor		
Red cap	Black cap	Resistance
U	+ BF	~ 18 Kohm
V	+ BF	~ 16 Kohm
W	+ BF	~ 18 Kohm
U	- B	~ 16 Kohm
V	- B	~ 14 Kohm
W	- B	~ 16 Kohm
U	V	~ 25 Kohm
V	W	~ 33 Kohm
W	U	~ 25 Kohm

If very different values are measured compared to those referred to in the above table,
disconnect all the power cables from the logic unit and repeat the measurements

If an open circuit is detected, replace the logic unit

Self-diagnostic
Connect the drive logic unit to the pump motor and check whether the display shows the alarm code "07".
YES: replace the logic unit
If alarm “37“ appears check the motor state (see paragraph INSULATION CONTROL PROCEDURE and MOTOR WINDING CONTROL PROCEDURE)

08	CONTACTOR OPEN

Condition for error detection

Failure on the CT2 contactor. The contactor is powered, but the contacts do not close.
- Check the main contactor coil CT2 (45 Ω) and relevant cables
- Check the state of the two-directional diode (D2)
- Check the state of the contacts and the wiring harness continuity (no current passage allowed)

Reference wiring diagram page 2/7 (chapter 17, section WIRING DIAGRAMS)

09	STBY I HIGH

Condition for error detection

Failure on the current sensor.
Check the drive motor and relative cables and the truck insulation.
Replace the logic unit.

10	CAPACITOR CHARGE

Condition for error detection

At the ignition, the logic unit tries to charge the condensers by an internal power resistance and an internal diode, and checks that the condensers are charged in the arranged time. If this does not occur, an alarm is send; the main contactor remains open.

- Check the negative connection between the logic unit and the battery
- Check the voltage at the key input (pin 1, connector JT, cable R03 on the traction logic unit: there must be battery voltage
- Disconnect the connector J15 and J2. If the alarm disappears check the status of the temperature sensor
- If the alarm is still present, replace the logic unit.

If the alarm appears along with alarm 40 of the lifting logic unit, check as follows to find the faulty control:

- Disconnect the cable (T+) from the traction logic unit and the cable (+) from the lifting logic unit.
- Using a multimeter, check the voltage between the positive (+BF) and the negative (-B) of both logic units
- Replace the logic unit with voltage between -B and +BF close to zero.

Reference wiring diagram page 2/7 (chapter 17, section WIRING DIAGRAMS)

11	HIGH TEMPERAURE

Condition for error detection

Logic unit temperature is higher than 85°C. The maximum current is reduced proportionally to the temperature increase.
At 105°C the current is reduced to 0 and the module stops.
Check:

- the state of the dissipator paste between the control and the counterweight. This must be present on all the control surface
- the LH CONTR TEMP parameter (menu TESTER - TRACTION of the instrument panel). If below 85°C, replace the traction logic unit.

12	MOTOR TEMPERATURE

Condition for error detection

This alarm appears when the motor temperature sensor reaches 140°C.
If the alarm appears when the motor is cold, check:
- The state of the wiring harness and the temperature sensor connector
- Connect a 600 ohm resistance to the sensor connector:
  - If the alarm disappears, replace the temperature sensor
  - If the alarm persists replace the logic unit

13	ENCODER ERROR

Condition for error detection

This alarm shows that the encoder information are incorrect or absents.
The encoder transmits signals only when the motor is running. The alarm is noticed by the logics when 40Hz are passed.
If on the dashboard appers the alarm and the operator makes the reset with the key with the machine stopped, the alarm disappears.
If the alarm signal is given before reaching 40 Hz, the problem may be linked to the incorrect insulation of a power cable on the chassis: without the correct encoder signals, the machine stays still or moves very slowly. To determine whether the problem is to be attributed to the encoder or to the logic, proceed as follows:

- Check the state of the wiring harness and the connectors.
- Check that there are 12V between pin 1 and 2 connector J15
- Check the state of the encoder ball bearing as shown below

Use an analogic or digital multimeter to determine where is located the problem.

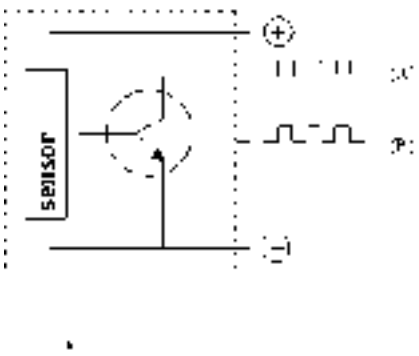

Encoder basic electric diagram.
In the figure there is only one signal (A).
The encoders used generate two equal signals, with a 90° difference (A-B).

1. Connect the tester positive point (red) to the encoder positive terminal.
2. Connect the tester COM point (black) to the encoder signal (A).

According to the engine position, the following values will be displayed:

- low signal: 0.5 -- 1.5 Volt
- high signal: 10.5 -- 11.5 Volt

Intermediate values cannot be read as the motor is stopped.
If the motor is working, the multemeter will automatically read the Mv (medium value)

Mv= 5,5 - 6,5 Volt

Carrying out this test directly on the logic connectors it is possible to determine if the signals are good (see upper description) or if the channels are opened or in shour circuit. If the signals are good, the problem should be attributed to the logic unit.

14	THERMIC SENSOR KO

Condition for error detection

Logic unit thermal detector out of range, check:
- The state of the wiring harness and the temperature sensor connector
- Connect a 600 ohm resistance to the sensor connector:
  - If the alarm disappears, replace the temperature sensor
  - If the alarm persists replace the logic unit.

15	SAFETY IN

Condition for error detection

Traction logic unit stop.
Verify:
- Lifting logic unit alarms.
- If YES, the alarm it is only a consequence. Check the diagnostics of the lifting logic unit
- If NO, Check the LV wiring harness and the connection between pin 11 connector JT and pin19 connector JP
- If NO, that the pin 19, connector JP, cable LV is a GND
- If NO, internal fault of the logic unit

Reference wiring diagram page 2/7 (chapter 17, section WIRING DIAGRAMS)

16	CAN BUS KO

Condition for error detection

Can-bus comunication failure. The alarm appears if the traction logic unit doesn't receive the information from the MCB board or the lifting logic unit.
Before to replace every board, verify:
- The dashboard alarms, to identify exactly the board that does not comunicate
- Enter the SOFT VERS menu to see which card is not present on the can-bus line
- Can-bus pull-up resistance presence
- dashboard 180 Ohm
- MCB 180 Ohm
- armrest 180 Ohm

17	WAITING FOR NODE

Condition for error detection

Communication failure in the can-bus.The alarm appears if the traction logic unit has identified a delay in the data transmission from the I/O board, the traction logic unit or armrest board.
- Check if the alarm appears in combination with others alalms. In this case, this alarm is consequent.
- Check the dashboard's alarms, before replacing any cards

If the alarm appears alone:
- check the can bus connector: all wires must be well connected in both the side of the wiring loom. The alarm can be generated by a false contact
- if the above tests are negative replace the logic unit

18	AUX OUTPUT KO - UNUSED

19	DRIVER SHORTED

Condition for error detection

Verify:
- The state of the wiring harness and the connectors:
  - on the contactor CT2
  - on the connector J50 pin 1 and 8
  - on the connector JT pin 16 and 17
- The state of the contactor CT2 coil (standard 45 ohm).
- That between pin 16, connector JT and the GND (-BATT) there is no continuity.

Replace the logic unit.

20	CONTACTOR DRIVER

Condition for error detection

Failure on the CT2 contactor driver.
Verify:
- The state of the wiring harness and the connectors:
  - on the contactor CT2
  - on the connector J50 pin 1 and 8
  - on the connector JT pin 16 and 17
- The state of the contactor CT2 coil (standard 45 ohm).
- That between pin 16, connector JT and the GND (-BATT) there is no continuity:

Replace the logic unit.

21	AUX COIL SHORTED

Condition for error detection

Failure on the CT2 contactor.
- Check the state of the coil (45 ohm)
- Check that there is no short circuit on the wiring harness
- Check the connections:
  - on the contactor CT2
  - on the connector J50 pin 1 and 8
  - on the connector JT pin 16 and 17

Replace the logic unit.

Reference wiring diagram page 2/7 (chapter 17, section WIRING DIAGRAMS)

22	VACC NOT OK

Condition for error detection

Fault in the steering potentiometer.
Acquire the SERIAL NUMBER and steering potentiometer (LEARN STEER POT)
Check the state of the steering potentiometer of the wiring harness and connections (MENU TESTER)

Steering potentiometer values measured with a multimeter on the connector J14 between pins 1 and 2
Rear wheel in central position ~3.40 KΩ
Rear wheel fully to the right ~1.90 KΩ
Rear wheel fully to the left ~4.95 KΩ

23	INCORRECT START - NOT USED

24	SEAT MISMATCH

Condition for error detection

Seat switch open during traction.
the alarm appears If the information of the seat micro does not reach both traction logic units.
Verify:
- The state of the SW2 microswitch and relay US1
- The state of the connections and wiring harnesses:
  - Connector J50 pins 7 and 12
  - JT pin 6
  - JP pin 6
  - J50 pins 1 and 2
  - J25 pins 1 and 3

Reference wiring diagram page 2/7 (chapter 17, section WIRING DIAGRAMS)

25	WRONG SET BATTERY

Condition for error detection

When the key is turned ON, the logic unit checks the battery voltage and compares it with the “SET BATTERY” parameter setting. If the actual value is 20% higher or lower than the nominal value, there is a fault.
- Check on the Zapi console if the parameter SET BATTERY TYPE (ADJUSTMENT MENU) is set to 24V
- Check the battery status and, if necessary, replace the battery.

26	REMOTE INPUT - UNUSED

27	BAD STEER 0-SET - UNUSED

28	STEER SENSOR KO

Condition for error detection

This alarm signals a failure to the steering potentiometer cursor or to the relevant wiring harness.

Acquire the SERIAL NUMBER and steering potentiometer (LEARN STEER POT)
Check the state of the steering potentiometer of the wiring harness and connections (MENU TESTER)

Steering potentiometer values measured with a multimeter on the connector J14 between pins 1 and 2
Rear wheel in central position ~3.40 KΩ
Rear wheel fully to the right ~1.90 KΩ
Rear wheel fully to the left ~4.95 KΩ

29	FORW + BACK - UNUSED

30	UNUSED

0A	SAFETY OUTPUT

Condition for error detection

SAFETY IN control output connector JT pin 19.
Logic unit SAFETY driver defect.
Check the truck insulation (see paragraph INSULATION CONTROL PROCEDURE)
Replace the logic unit.

0B	SLIP PROFILE

Condition for error detection

Error in the memory data where the flowing parameters are loaded.
Make a logic unit RESET to re-load the default parameters.
If the error persists when the machine is switched back on, install the last version of the software using the programmer.
If the problem presists replace the logic unit.

0C	ANALOG INPUT

Condition for error detection

Control internal error.
- check the tuck and motor insulation (INSULATION CONTROL PROCEDURE and MOTOR WINDING CONTROL PROCEDURE)
- check the connections and wiring harnesses
- check the sensors and potentiometers connected to the logic unit

Replace the logic unit.

0D	HARDWARE FAULT

Condition for error detection

Control internal error.
- check the tuck and motor insulation (INSULATION CONTROL PROCEDURE and MOTOR WINDING CONTROL PROCEDURE)
- check the connections and wiring harnesses
- check the sensors and potentiometers connected to the logic unit

Replace the logic unit.

0E	POWER MOS SHORTED

Condition for error detection

The alarm signals a power circuit failure.
Verify the correct connection of the motor to the logic:
- One or more motor phases could be disconnected
- Power cables connection
- Truck insulation and motor state see paragraph INSULATION CONTROL PROCEDURE and MOTOR WINDING CONTROL PROCEDURE)
- Continuity values obtained directly on the control, with disconnected power cables:

Values on the control with disconnected motor		
Red cap	Black cap	Resistance
U	+ BF	~ 18 Kohm
V	+ BF	~ 16 Kohm
W	+ BF	~ 18 Kohm
U	- B	~ 16 Kohm
V	- B	~ 14 Kohm
W	- B	~ 16 Kohm
U	V	~ 25 Kohm
V	W	~ 33 Kohm
W	U	~ 25 Kohm

If an open circuit is detected, replace the logic unit

Replace the logic unit.

0F	FLASH CHECKSUM

Condition for error detection

Control internal error.
- - Restore the default parameters using the RESET logic unit function
- If the error persists when the machine is switched back on, install the last version of the software using the programmer.
- If the defect persist when the key is switched OFF and ON again, replace the logic unit.

1A	SOFTWARE ERROR -

Condition for error detection

Error in the memory data where the flowing parameters are loaded.
Make a logic unit RESET to re-load the default parameters.
- If the error persists when the machine is switched back on, install the last version of the software using the programmer.
- If the problem presists replace the logic unit.

1B	THERMIC MOT KO

Condition for error detection

Interrupted or disconnected motor temperature sensor.
Verify:
- The state of the wiring harness and the temperature sensor connector
- Connect a 600 ohm resistance to the sensor connector:
  - If the alarm disappears, replace the temperature sensor
  - If the alarm persists replace the logic unit.

1C	ENCODER LOCK

Condition for error detection

Interrupted or disconnected motor encoder.
The alarm appears after 10 seconds approximately with the accelerator pedal pressed.
The machine works at reduced speed and at maximum current.
- Check that the motor and reduction gears spin freely (possible breakage/mechanical blockage of the traction wheel)
- Check the state of the drive motor encoder

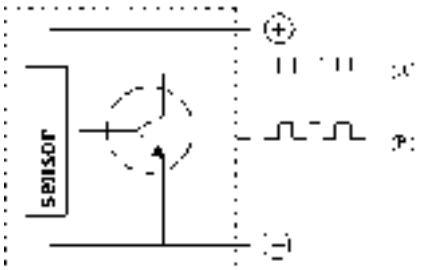

Encoder basic electric diagram.
In the figure there is only one signal (A).
The encoders used generate two equal signals, with a 90° difference (A-B).

1. Connect the tester positive point (red) to the encoder positive terminal.
2. Connect the tester COM point (black) to the encoder signal (A).

According to the engine position, the following values will be displayed:
- low signal: 0.5 -- 1.5 Volt
- high signal: 10.5 -- 11.5 Volt

Intermediate values cannot be read as the motor is stopped.
If the motor is working, the multemeter will automatically read the Mv (medium value)

Mv= 5,5 - 6,5 Volt

Carrying out this test directly on the logic connectors it is possible to determine if the signals are good (see upper description) or if the channels are opened or in shour circuit. If the signals are good, the problem should be attributed to the logic unit.

1D	UNUSED

1E	**CONTACTOR CLOSED**

Condition for error detection

CT2 contactor driver failure. The logic unit cuts the curret to the coil, but the controls remain closed.
Disconnect the battery and check:
- The CT2 contactor windings and the relevant wiring harnesses
- Clean the contactor connections
- Check the control of the contactor directly on connector JT pins 16 and 17 of the logic unit
Replace the logic unit.

Reference wiring diagram page 2/7 (chapter 17, section WIRING DIAGRAMS)

2A	**CHOPPER NOT CONF - UNUSED**

2B	**STEER WIRE KO**

Condition for error detection

This alarm signals a failure in the steering potentiometer or in the relevant wiring harness.
Verify:
- Wiring harness continuity (see paragraph WIRE HARNESS AND CONNECTOR INSPECTION PROCEDURE)
- Correct functioning of the potentiometer using a multimeter:
  - Rear wheel in central position ~3.40 KΩ
  - Rear wheel fully to the right ~1.90 KΩ
  - Rear wheel fully to the left ~4.95 KΩ
- Correct wiring harness connection (positive and negative)

2C	**DATA ACQUISITION**

Condition for error detection

This warning comunicates that the logic is in current acquisition phase.
In this phase the logic doesn't work.
Reset the logic unit using the RESET function.
Repeat all acquisitions.
Update the logic unit to the latest version of the software via the PROGRAMMER.
If the alarm persists after the key reset, replace the logic unit.

2D	WRONG 0 VOLT

Condition for error detection

Control internal error.
- check the tuck and motor insulation (INSULATION CONTROL PROCEDURE and MOTOR WINDING CONTROL PROCEDURE)
- check the power circuit and the battery
- check the connections and wiring harnesses
- check the sensors and potentiometers connected to the logic unit

Replace the logic unit.

2E	HANDBRAKE

Condition for error detection

Parking brake pulled or failure on the microswitch of the parking brake.
Check:
- parking brake
- the state of the microswitch SW7 and relative wiring harnesses, connectors

2F	WRONG RAM MEMORY

Condition for error detection

Activeted protection against the electrostatic charges.
Switch the machine off and back on again.

LIFTING LOGIC UNIT

31	WATCHDOG

Condition for error detection

The test is made in both running and standby. It is a self-diagnosing test within the logic.
This alarm could also be caused by the can-bus malfunctioning.
Verify:
- truck insulation (see paragraph INSULATION CONTROL PROCEDURE)
- the can-bus connections
- replace the electronic control unit

32	EEPROM KO

Condition for error detection

Defect in area of memory storing settings; alarm disables operation of the machine, the unit loads the default settings.
Use the function RESET to reload the default parameters (see paragraph DEFAULT RST).
If the error persists when the machine is switched back on, install the last version of the software using the programmer.
If the defect persists when the machine is switched back on again, replace the module.
If the alarm disappears then the previously saved parameters will be deleted and the default parameters of the electronic control unit will automatically be loaded.

33	LOGIC FAILURE #3

Condition for error detection

Logic defect.
- Check the truck insulation (see paragraph INSULATION CONTROL PROCEDURE)
- Replace the logic unit.

34	LOGIC FAILURE #2

Condition for error detection

Fault in the hardware section of the logic board which manages the phase voltage feedback.
The alarm appears also if the CT2 contactor is open during operation.
Check:
- the pins 1 and 14 of connector J50 and connections P6 and P5. It could be present a false connection
- the contactor coil (45 Ohm)
- check the truck insulation (see paragraph INSULATION CONTROL PROCEDURE)
- the state of the power cables connected to the motor (tightness of connections, sheath wear, connection stapling)
- replace the logic unit.

35	LOGIC FAILURE #1

Condition for error detection

This alarm signals that the interruption of protection against under voltage /over voltage has been triggered.
- UNDER voltage: the logic unit controls the key input (pins 1 and 4, connector JP, cable R04 of the logic unit). If the voltage has a low peak, the alarm is signalled.
OVER voltage: the logic unit controls the voltage on the internal condensers. If the voltage has a hight peak during the braking, the alarm is signalled.

The possible reasons are:

a. Under voltage / over voltage of the battery, or loss of voltage after the ignition key or after the battery connector.

b. If the alarm is signaled when the vehicle is switched on and it appears in combination with alarm 05 of the traction logic unit, check:
- the key switch (false contact, rusted contacts on the key cylinder)
- the battery plug-socket (false contact, damaged contacts)
- the state of the battery elements (see chapter 01 BATTERY)

c. The alarm appears also when one or more motor phases do not present a correct isolation at a movement request.
- Check the motor insulation (see paragraph INSULATION CONTROL PROCEDURE).
- the insulation of the power cables connected to the motor (tightness of connections, sheath wear, connection stapling)
- Check that the motor phases (U-V-W) are shorted among them (see paragraph MOTOR WINDING CONTROL PROCEDURE)

d. Defect in the logic hardware section that controls the protection against the overvoltage.
Logic defect. Replace the logic unit.

Reference wiring diagram page 2/7 (chapter 17, section WIRING DIAGRAMS)

36	VMN LOW

Condition for error detection

Failure in the VMN test.
The test begins at the switching on; check the connections of the 3 supplying cables from the logic unit to the lifting motor, the status of the cables and the status of the coil of the CT2 contactor (45 Ohm). If the coil is interrupted the truck will signal the alarm at the switching on. If the coil value is ok, proceed following one of the test below described in order to establish if the failure is produced by a cause internal or external to the logic:

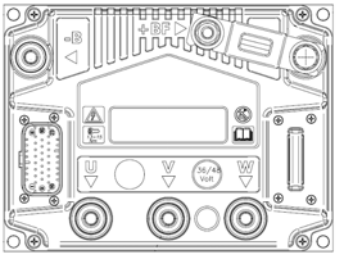

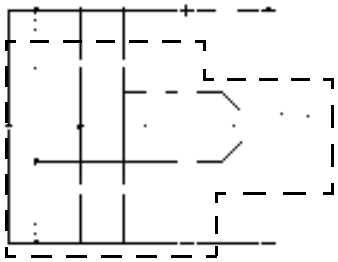

TEST 1

- Operate the parking brake and switch off the machine
- Open the compartment and disconnect the battery
- Check the power cables on the motor are tight
- Check the power cables on the logic unit are tight
- Check the continuity values between the following points on the control unit using a tester:

Values on the control with connected motor		
Red cap	Black cap	Resistance
U	+ BF	~ 7 Kohm
V	+ BF	~ 7 Kohm
W	+ BF	~ 7 Kohm
U	- B	~ 7 Kohm
V	- B	~ 7 Kohm
W	- B	~ 7 Kohm
U	V	0 ohm
V	W	0 ohm
W	U	0 ohm

Values on the control with disconnected motor		
Red cap	Black cap	Resistance
U	+ BF	~ 18 Kohm
V	+ BF	~ 16 Kohm
W	+ BF	~ 18 Kohm
U	- B	~ 16 Kohm
V	- B	~ 14 Kohm
W	- B	~ 16 Kohm
U	V	~ 25 Kohm
V	W	~ 33 Kohm
W	U	~ 25 Kohm

If very different values are measured compared to those referred to in the above table, disconnect all the power cables from the logic unit and repeat the measurements

If an open circuit is detected, replace the logic unit

Self-diagnostic

Connect the lifting logic unit to the drive motor and check whether the display shows the alarm code "36".
YES: replace the logic unit
If alarm “06“ appears check the motor state (see paragraph INSULATION CONTROL PROCEDURE and MOTOR WINDING CONTROL PROCEDURE)

37	VMN HIGH

Condition for error detection

Failure in the VMN test.
This test starts when the ignition key is turned ON and there is no current consumption (machine stationary) The alarm appears if the power circuit connections are open; check the connection of the 3 power cables from the logic unit to the pump motor and the cables condition.

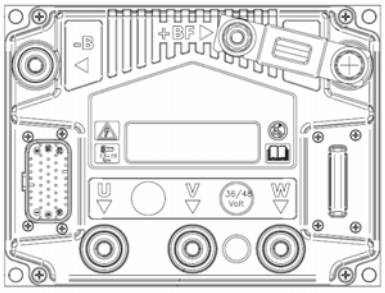

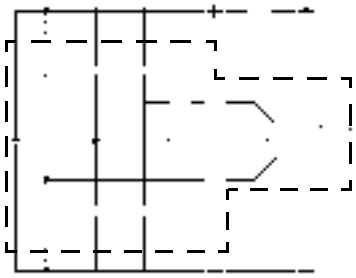

To determine the cause of the fault, proceed by running one of the tests described below:

TEST 1

- Operate the parking brake and switch off the machine
- Open the compartment and disconnect the battery
- Check the power cables on the motor are tight
- Check the power cables on the logic unit are tight
- Check the continuity values between the following points on the control unit using a tester:

Values on the control with connected motor		
Red cap	Black cap	Resistance
U	+ BF	~ 7 Kohm
V	+ BF	~ 7 Kohm
W	+ BF	~ 7 Kohm
U	- B	~ 7 Kohm
V	- B	~ 7 Kohm
W	- B	~ 7 Kohm
U	V	0 ohm
V	W	0 ohm
W	U	0 ohm

Values on the control with disconnected motor		
Red cap	Black cap	Resistance
U	+ BF	~ 18 Kohm
V	+ BF	~ 16 Kohm
W	+ BF	~ 18 Kohm
U	- B	~ 16 Kohm
V	- B	~ 14 Kohm
W	- B	~ 16 Kohm
U	V	~ 25 Kohm
V	W	~ 33 Kohm
W	U	~ 25 Kohm

If very different values are measured compared to those referred to in the above table,
disconnect all the power cables from the logic unit and repeat the measurements

If an open circuit is detected, replace the logic unit

Self-diagnostic

Connect the lifting logic unit to the drive motor and check whether the display shows the alarm code "37".
YES: replace the logic unit
If alarm “07“ appears check the motor state (see paragraph INSULATION CONTROL PROCEDURE and MOTOR WINDING CONTROL PROCEDURE)

38	CONTACTOR OPEN

Condition for error detection

Failure on the CT2 contactor. The contactor is powered, but the contacts do not close.
- Check the main contactor coil CT2 (45 Ω) and relevant cables
- Check the state of the two-directional diode (D2)
- Check the state of the contacts and the wiring harness continuity (no current passage allowed)

Reference wiring diagram page 2/7 (chapter 17, section WIRING DIAGRAMS)

39	STBY I HIGH

Condition for error detection

Failure on the current sensor.
- Check the drive motor and relative cables and the truck insulation.

Replace the logic unit.

40	CAPACITOR CHARGE

Condition for error detection

At the ignition, the logic unit tries to charge the condensers by an internal power resistance and an internal diode, and checks that the condensers are charged in the arranged time. If this does not occur, an alarm is send; the main contactor remains open.

- Check the negative connection between the logic unit and the battery
- Check the voltage at the key input (pins 1 and 4, connector JP, cable R03 on the lifting logic unit: there must be battery voltage
- Disconnect the connector J13 and J3. If the alarm disappears check the status of the temperature sensor
- If the alarm is still present, replace the logic unit.

If the alarm appears along with alarm 10 of the traction logic unit, check as follows to find the faulty control:

- Disconnect the cable (T+) from the traction logic unit and the cable (+) from the lifting logic unit
- Using a multimeter, check the voltage between the positive (+BF) and the negative (-B) of both logic units
- Replace the logic unit with voltage between -B and +BF close to zero

Reference wiring diagram page 2/7 (chapter 17, section WIRING DIAGRAMS)

41	HIGH TEMPERAURE

Condition for error detection

Logic unit temperature is higher than 85°C. The maximum current is reduced proportionally to the temperature increase.
At 105°C the current is reduced to 0 and the module stops.
Check:

- the state of the dissipator paste between the control and the counterweight. This must be present on all the control surface
- the CONTR TEMP parameter (menu TESTER - MAT HANDLING on the instrument panel). If below 85°C, replace the liftinglogic unit.

42	MOTOR TEMPERATURE

Condition for error detection

This alarm appears when the motor temperature sensor reaches 140°C.
If the alarm appears when the motor is cold, check:
- The state of the wiring harness and the temperature sensor connector
- Connect a 600 ohm resistance to the sensor connector:
  - If the alarm disappears, replace the temperature sensor
  - If the alarm persists replace the logic unit

43	ENCODER ERROR

Condition for error detection

This alarm shows that the encoder information are incorrect or absents.
The encoder transmits signals only when the motor is running. The alarm is noticed by the logics when 40Hz are passed.
If on the dashboard appers the alarm and the operator makes the reset with the key with the machine stopped, the alarm disappears.
If the alarm signal is given before reaching 40 Hz, the problem may be linked to the incorrect insulation of a power cable on the chassis: without the correct encoder signals, the machine stays still or moves very slowly. To determine whether the problem is to be attributed to the encoder or to the logic, proceed as follows:

- Check the state of the wiring harness and the connectors.
- Check that there are 12V between pins 1 and 2 connector J13
- Check the state of the encoder ball bearing as shown below

Use an analogic or digital multimeter to determine where is located the problem.

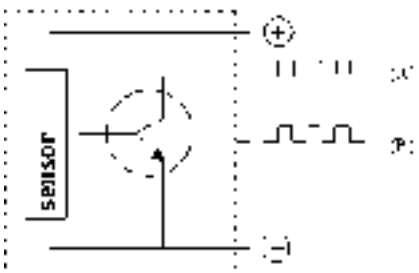

Encoder basic electric diagram.
In the figure there is only one signal (A).
The encoders used generate two equal signals, with a 90° difference (A-B).

1. Connect the tester positive point (red) to the encoder positive terminal.
2. Connect the tester COM point (black) to the encoder signal (A).

According to the engine position, the following values will be displayed:

- low signal: 0.5 -- 1.5 Volt
- high signal: 10.5 -- 11.5 Volt

Intermediate values cannot be read as the motor is stopped.
If the motor is working, the multemeter will automatically read the Mv (medium value)

Mv= 5,5 - 6,5 Volt

Carrying out this test directly on the logic connectors it is possible to determine if the signals are good (see upper description) or if the channels are opened or in shour circuit. If the signals are good, the problem should be attributed to the logic unit.

44	THERMIC SENSOR KO

Condition for error detection

Logic unit thermal detector out of range, check:
- The state of the wiring harness and the temperature sensor connector
- Connect a 600 ohm resistance to the sensor connector:
  - If the alarm disappears, replace the temperature sensor

If the alarm persists replace the logic unit.

45	SAFETY IN

Condition for error detection

Stopped truck.
Verify:
- Traction logic unit alarms.
- If YES, the alarm it is only a consequence. Check the diagnostics of the traction logic unit
- If NO, that pin 11, connector JP, cable NZ is a GND
- If NO, check the relay US1 and the seat microswitch SW2
- If NO, internal fault of the logic unit

Reference wiring diagram page 2/7 (chapter 17, section WIRING DIAGRAMS)

46	CAN BUS KO

Condition for error detection

Can-bus comunication failure. The alarm appears if the lifting logic unit doesn't receive the information from the MCB board or the traction logic unit.
Before to replace every board, verify:
- The dashboard alarms, to identify exactly the board that does not comunicate
- Enter the SOFT VERS menu to see which card is not present on the can-bus line
- Can-bus pull-up resistance presence
- dashboard 180 Ohm
- MCB 180 Ohm
- armrest 180 Ohm

47	WAITING FOR NODE

Condition for error detection

Failure of the can bus comunication. The alarm appears if the lifting logic unit receives the information of I/O card ether traction logic unit or armrest board with a delay.

- Check if the alarm appears in combination with other alarms. In this case, this alarm is consequent.
- Check the dashboard's alarms, before replacing any cards
- If the alarm appears alone:
- Check the can bus connector: all wires must be well connected in both the side of the wiring harness. The alarm can be generated by a false contact
- if the above tests are negative replace the lifting logic unit

48	AUX OUTPUT KO - UNUSED

49	DRIVER SHORTED

Condition for error detection

Alarm not used in pump configuration.
Verify:
- the presence of +Vb on pin 1 and 4 connector JP
- Short circuit between pins 16 and 17 connector JP (replace the logic unit)
- Resistive value between pin 16 connector JP and -BATT of the logic unit (standard open circuit)

50	CONTACTOR DRIVER

Condition for error detection

Alarm not used in pump configuration.
Verify:
- the presence of +Vb on pin 1 and 4 connector JP
- Short circuit between pins 16 and 17 connector JP (replace the logic unit)
- Resistive value between pin 16 connector JP and -BATT of the logic unit (standard open circuit)

51	AUX COIL SHORTED

Condition for error detection

Alarm not used in pump configuration.
Verify:
- the presence of +Vb on pin 1 and 4 connector JP
- Short circuit between pins 16 and 17 connector JP (replace the logic unit)
- Resistive value between pin 16 connector JP and -BATT of the logic unit (standard open circuit)

52	VACC NOT OK

Condition for error detection

Alarm not used in pump configuration.
Verify:
- the presence of +Vb on pin 1 and 4 connector JP

53	INCORRECT START

Condition for error detection

Seat microswitch opened during pump operation

54	SEAT MISMATCH

Condition for error detection

Seat switch open during traction.
The alarm appears If the information of the seat micro does not reach both traction logic units.
Verify:
- The state of the SW2 microswitch and relay US1
- The state of the connections and wiring harnesses:
  - Connector J50 pins 7 and 12
  - JT pin 6
  - JP pin 6
  - J50 pins 1 and 2
  - J25 pins 1 and 3

Reference wiring diagram page 2/7 (chapter 17, section WIRING DIAGRAMS)

55	WRONG SET BATTERY

Condition for error detection

When the key is turned ON, the logic unit checks the battery voltage and compares it with the “SET BATTERY” parameter setting. If the actual value is 20% higher or lower than the nominal value, there is a fault.
- Check on the Zapi console if the parameter SET BATTERY TYPE (ADJUSTMENT MENU) is set to 24V
- Check the status of the battery and if necessary replace it with a correct one.

56	REMOTE INPUT - UNUSED

57	BAD STEER 0-SET - UNUSED

58	STEER SENSOR KO

Condition for error detection

Alarm not used in pump configuration.
Verify:
- the presence of +Vb on pin 1 and 4 connector JP

59	FORW + BACK - UNUSED

3A	SAFETY OUTPUT

Condition for error detection

Logic stop.
Verify:
- Traction logic unit alarms.
- If YES, the alarm it is only a consequence. Check the diagnostics of the lifting logic unit
- If NO, Check the LV wiring harness and the connection between pin 11 connector JT and pin19 connector JP
- If NO, that the pin 19, connector JP, cable LV is a GND
- If NO, internal fault of the logic unit

- Reference wiring diagram page 2/7 (chapter 17, section WIRING DIAGRAMS)

3B	SLIP PROFILE

Condition for error detection

Error in the memory data where the flowing parameters are loaded.
Make a logic unit RESET to re-load the default parameters.
- If the error persists when the machine is switched back on, install the last version of the software using the programmer.
- If the problem presists replace the logic unit.

3C	ANALOG INPUT

Condition for error detection

Control internal error.
- check the tuck and motor insulation (INSULATION CONTROL PROCEDURE and MOTOR WINDING CONTROL PROCEDURE)
- check the connections and wiring harnesses
- check the sensors and potentiometers connected to the logic unit

Replace the logic unit.

3D	HARDWARE FAULT

Condition for error detection

Control internal error.
- check the tuck and motor insulation (INSULATION CONTROL PROCEDURE and MOTOR WINDING CONTROL PROCEDURE)
- check the connections and wiring harnesses
- check the sensors and potentiometers connected to the logic unit

Replace the logic unit.

3E	POWER MOS SHORTED

Condition for error detection

The alarm signals a power circuit failure.
Verify the correct connection of the motor to the logic:
- One or more motor phases could be disconnected
- Power cables connection
- Truck insulation and motor state see paragraph INSULATION CONTROL PROCEDURE and MOTOR WINDING CONTROL PROCEDURE)
- Continuity values obtained directly on the control, with disconnected power cables:

Values on the control with disconnected motor		
Red cap	Black cap	Resistance
U	+ BF	~ 18 Kohm
V	+ BF	~ 16 Kohm
W	+ BF	~ 18 Kohm
U	- B	~ 16 Kohm
V	- B	~ 14 Kohm
W	- B	~ 16 Kohm
U	V	~ 25 Kohm
V	W	~ 33 Kohm
W	U	~ 25 Kohm

If an open circuit is detected, replace the logic unit

Replace the logic unit.

3F	FLASH CHECKSUM

Condition for error detection

Control internal error.
- - Restore the default parameters using the RESET logic unit function
- If the error persists when the machine is switched back on, install the last version of the software using the programmer.
- If the defect persist when the key is switched OFF and ON again, replace the logic unit.

4A	SOFTWARE ERROR -

Condition for error detection

Error in the memory data where the flowing parameters are loaded.
Make a logic unit RESET to re-load the default parameters.
- If the error persists when the machine is switched back on, install the last version of the software using the programmer.
- If the problem presists replace the logic unit.

4B	THERMIC MOT KO

Condition for error detection

Interrupted or disconnected motor temperature sensor.
Verify:
- The state of the wiring harness and the temperature sensor connector
- Connect a 600 ohm resistance to the sensor connector:
  - If the alarm disappears, replace the temperature sensor

If the alarm persists replace the logic unit.

4C	ENCODER LOCK

Condition for error detection

Interrupted or disconnected motor encoder.
The alarm appears after 10 seconds approximately with the accelerator pedal pressed.
The machine works at reduced speed and at maximum current.
- Disconnect the pump from the motor and see if the motor runs freely
- Check the state of the pump motor encoder

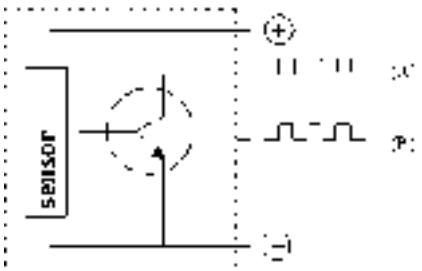

Encoder basic electric diagram.
In the figure there is only one signal (A).
The encoders used generate two equal signals, with a 90° difference (A-B).

1. Connect the tester positive point (red) to the encoder positive terminal.
2. Connect the tester COM point (black) to the encoder signal (A).

According to the engine position, the following values will be displayed:
- low signal: 0.5 -- 1.5 Volt
- high signal: 10.5 -- 11.5 Volt

Intermediate values cannot be read as the motor is stopped.
If the motor is working, the multemeter will automatically read the Mv (medium value)

Mv= 5,5 - 6,5 Volt

Carrying out this test directly on the logic connectors it is possible to determine if the signals are good (see upper description) or if the channels are opened or in shour circuit. If the signals are good, the problem should be attributed to the logic unit.

4D	UNUSED

4E	**CONTACTOR CLOSED**

Condition for error detection

Alarm not used in pump configuration.
Verify:
- the presence of +Vb on pin 1 and 4 connector JP

5A	**CHOPPER NOT CONF - UNUSED**

5B	**STEER WIRE KO**

Condition for error detection

Alarm not used in pump configuration.
Verify:
- the presence of +Vb on pin 1 and 4 connector JP

5C	**DATA ACQUISITION**

Condition for error detection

This warning comunicates that the logic is in current acquisition phase.
In this phase the logic doesn't work.
- Reset the logic unit using the RESET function
- Repeat all acquisitions
- Update the logic unit to the latest version of the software via the PROGRAMMER
- If the alarm persists after the key reset, replace the logic unit.

5D	WRONG 0 VOLT

Condition for error detection

Control internal error.
- check the tuck and motor insulation (INSULATION CONTROL PROCEDURE and MOTOR WINDING CONTROL PROCEDURE)
- check the power circuit and the battery
- check the connections and wiring harnesses
- check the sensors and potentiometers connected to the logic unit

Replace the logic unit.

5E	HANDBRAKE

Condition for error detection

Parking brake pulled or failure on the microswitch of the parking brake.
Check:
- Release the parking brake
- the state of the microswitch SW7 and relative wiring harnesses, connectors

5F	WRONG RAM MEMORY

Condition for error detection

Activeted protection against the electrostatic charges.
Switch the machine off and back on again.

MHYRIO LOGIC UNIT

Concerning this session, in the “Condition for error detection” description, if not expressly specified, the wording "logic unit" refers to the MHYRIO LOGIC UNIT.

A1	EEPROM KO

Condition for error detection

Fault in the area of memory in which the adjustment parameters are stored; this alarm inhibists the truck operation; the logic unit will use default parameters.

If the fault persists when the machine is switched on, carry out a card RESET from the display. If the problem persists replace the logic unit.
If the alarm disappears, remember that the parameters previously stored have been deleted and replaced with the default values.

A2	EV DRIVER SHORT

Condition for error detection

It is referred to the 5th way.
Check:
- Wiring harness continuity
- Presence of false contacts on connectors on the MHYRIO and solenoid valve sides
- State of coils EV9 and EV10
- Replace the logic unit.

Reference wiring diagram page 4/7 (chapter 17, section WIRING DIAGRAMS)

A3	CAN BUS KO

Condition for error detection

Failure of the can bus comunication. This alarm appears if the lifting logic unit does not receive information from the I/O board or the traction logic unit or the arm rest card.
Before to replace every board, verify:
- The dashboard alarms, to identify exactly the board that does not comunicate
- Enter the SOFT VERS menu to see which card is not present on the can-bus line
- Can-bus pull-up resistance presence
- dashboard 180 Ohm
- MCB 180 Ohm
- armrest 180 Ohm

A4	FF VALVES

Condition for error detection

Problem in the 5th way hardware circuit.
Check:
- Wiring harness continuity
- Presence of false contacts on connectors on the MHYRIO and solenoid valve sides
- State of coils EV9 and EV10
- Replace the logic unit.

Reference wiring diagram page 4/7 (chapter 17, section WIRING DIAGRAMS)

A5	UNUSED

A6	EVPG1 DRIV SHORT

Condition for error detection

It is referred to the lifting valves EV2 and EVP1.
Check:
- Wiring harness continuity
- Presence of false contacts on connectors on the MHYRIO and solenoid valve sides
- State of coil EV2 (standard 27 ohm) and EVP1 (standard 18 ohm)
- Replace the logic unit.

Reference wiring diagram page 4/7 (chapter 17, section WIRING DIAGRAMS)

A7	EVPG2 DRIV SHORT

Condition for error detection

It is referred to the tilting forward or backward valves EVP3 or EVP4.
Check:
- Wiring harness continuity
- Presence of false contacts on connectors on the MHYRIO and solenoid valve sides
- State of coils EVP3 and EVP4 (standard 18 ohm)
- Replace the logic unit.

Reference wiring diagram page 4/7 (chapter 17, section WIRING DIAGRAMS)

A8	EVPG3 DRIV SHORT

Condition for error detection

It is referred to the side shift valves EV5 or EV6.
Check:
- Wiring harness continuity
- Presence of false contacts on connectors on the MHYRIO and solenoid valve sides
- State of coils EV5 and EV6 (standard 19 ohm)
- Replace the logic unit.

Reference wiring diagram page 4/7 (chapter 17, section WIRING DIAGRAMS)

A9	EVPG4 DRIV SHORT

Condition for error detection

It is referred to the 4th way valves EV7 or EV8.
Check:
- Wiring harness continuity
- Presence of false contacts on connectors on the MHYRIO and solenoid valve sides
- State of coils EV7 and EV8 (standard 19 ohm)
- Replace the logic unit.

Reference wiring diagram page 4/7 (chapter 17, section WIRING DIAGRAMS)

AA	WRONG SET BATTERY

Condition for error detection

When the key is turned ON, the logic unit checks the battery voltage and compares it with the “SET BATTERY” parameter setting. If the actual value is 20% higher or lower than the nominal value, there is a fault.

- Check on the Zapi console if the parameter SET BATTERY TYPE (ADJUSTMENT MENU) is set to 24V
- Check the status of the battery and if necessary replace it with a correct one.

AB	HI SIDEDRIVER KO

Condition for error detection

The driver which supply the valves coils positive is shorted or open.
Problem in the hardware circuit.

- Check the wiring harnesses and connections on the MHYRIO and solenoid valve sides
- Check the coil status
- Replace the logic unit.

Reference wiring diagram page 4/7 (chapter 17, section WIRING DIAGRAMS)

AC	EVPG1 DRIVER KO

Condition for error detection

It is referred to the lifting valves EV2 and EVP1.
Check:

- Wiring harness continuity
- Presence of false contacts on connectors on the MHYRIO and solenoid valve sides
- State of coil EV2 (standard 27 ohm) and EVP1 (standard 18 ohm)
- Replace the logic unit.

Reference wiring diagram page 4/7 (chapter 17, section WIRING DIAGRAMS)

AD	EVPG2 DRIVER KO

Condition for error detection

It is referred to the tilting forward or backward valves EVP3 or EVP4.
Check:
- Wiring harness continuity
- Presence of false contacts on connectors on the MHYRIO and solenoid valve sides
- State of coils EVP3 and EVP4 (standard 18 ohm)
- Replace the logic unit.

Reference wiring diagram page 4/7 (chapter 17, section WIRING DIAGRAMS)

AE	EVPG3 DRIVER KO

Condition for error detection

It is referred to the side shift valves EV5 or EV6.
Check:
- Wiring harness continuity
- Presence of false contacts on connectors on the MHYRIO and solenoid valve sides
- State of coils EV5 and EV6 (standard 19 ohm)
- Replace the logic unit.

Reference wiring diagram page 4/7 (chapter 17, section WIRING DIAGRAMS)

AF	EVPG4 DRIVER KO

Condition for error detection

It is referred to the 4th way valves EV7 or EV8.
Check:
- Wiring harness continuity
- Presence of false contacts on connectors on the MHYRIO and solenoid valve sides
- State of coils EV7 and EV8 (standard 19 ohm)
- Replace the logic unit.

Reference wiring diagram page 4/7 (chapter 17, section WIRING DIAGRAMS)

B0	COIL SHORTED

Condition for error detection

Problem in the 5th way hardware circuit.
Check:
- Wiring harness continuity
- Presence of false contacts on connectors on the MHYRIO and solenoid valve sides
- State of coils EV9 and EV10
- Replace the logic unit.

Reference wiring diagram page 4/7 (chapter 17, section WIRING DIAGRAMS)

B1	UNDER VOLTAGE

Condition for error detection

This fault is signaled if an undervoltage condition is detected in the MHYRIO power supply.
- Connector J140 pins 1 and 2 = +Vb

Reference wiring diagram page 4/7 (chapter 17, section WIRING DIAGRAMS)

B2	EVP DRIVER KO

Condition for error detection

It is referred to the drain valve EVP.
Check:
- Wiring harness continuity
- Presence of false contacts on connectors on the MHYRIO and solenoid valve sides
- State of coil EVP (standard 18 ohm)
- Replace the logic unit.

Reference wiring diagram page 4/7 (chapter 17, section WIRING DIAGRAMS)

B3	EV DRIVER KO

Condition for error detection

It is referred to the 5th way.
Check:
- Wiring harness continuity
- Presence of false contacts on connectors on the MHYRIO and solenoid valve sides
- State of coils EV9 and EV10
- Replace the logic unit.

Reference wiring diagram page 4/7 (chapter 17, section WIRING DIAGRAMS)

B4	WATCHDOG

Condition for error detection

The test is made in both running and standby. It is a self-diagnosing test within the logic.
- Replace the logic unit.

B5	EVP DRIVER SHORTED

Condition for error detection

It is referred to the drain valve EVP.
Check:
- Wiring harness continuity
- Presence of false contacts on connectors on the MHYRIO and solenoid valve sides
- State of coil EVP (standard 18 ohm)
- Replace the logic unit.

Reference wiring diagram page 4/7 (chapter 17, section WIRING DIAGRAMS)

ARMREST CARD

Concerning this session, in the “Condition for error detection” description, if not expressly specified, the wording "logic unit" refers to the ARMREST BOARD

E1	PUMP INCORRECT START

Condition for error detection

Logic unit incorrect starting procedure.
- check if one of the potentiometers is activated before switching the key ON.
- verify using the console

Enter the TESTER function in the menu MAT. HANDLING and check the status of the potentiometers in the rest condition

LIFTING SWITCH = OFF
TILTING SWITCH = OFF
SIDESHIFT SWITCH = OFF
IV WAY SWITCH = OFF
V WAY SWITCH = OFF

LIFTING POT = 2,5 ± 0,2 V
TILTING POT = 2,5 ± 0,2 V
SIDESHIFT POT = 2,5 ± 0,2 V
IV WAY POT = 2,5 ± 0,2 V
V WAY POT = 2,5 ± 0,2 V

Once identified the potentiometer with the different values proceed as follows:
- reverse the potentiometer with one other potentiometer on the board(fingertips version)
- exchange the lifting potentiometer with the sideshift potentiometer or the tilting potentiometer with the 4th way potentiometer (joystick version)

- If the alarm persists in the same position, replace the board.

If the problem appears on a different potentiometer (according to where the defective potentiometer has been connected) replace the potentiometer

E2	BAD LIFT POT

Condition for error detection

Failure on the P4 lifting potentiometer in the fingertips / joysticks group.
Check the voltages on the potentiometer at rest
Enter the TESTER function in the menu MAT. HANDLING and check the LIFTING POT and LIFTING SWITCH parameters.
Conditions of rest:
- LIFTING POT = 2,5 ± 0,2 V
- LIFTING SWITCH = OFF

If the conditions of rest are different the potentiometer could be mechanically jammed or defective.
Check:
- exchange the lifting potentiometer with the tilting potentiometer (fingertips version) and verify the correct operation through console
- exchange the lifting potentiometer with the sideshift potentiometer (joystick version) and verify the correct operation through console

If the alarm persists replace the logic unit.

E3	BAD TILT POT

Condition for error detection

Failure on the P5 tilting potentiometer in the fingertips / joysticks group.
Check the voltages on the potentiometer at rest
Enter the TESTER function in the menu MAT. HANDLING and check the TILTING POT and TILTING SWITCH parameters.
Conditions of rest:
- TILTING POT = 2,5 ± 0,2 V
- TILTING SWITCH = OFF

If the conditions of rest are different the potentiometer could be mechanically jammed or defective.
Check:
- exchange the tilting potentiometer with the lifting potentiometer (fingertips version) and verify the correct operation through console
- exchange the tilting potentiometer with the 4th way potentiometer (joystick version) and verify the correct operation through console

If the alarm persists replace the logic unit.

E4	BAD SIDESHIFT POT

Condition for error detection

Failure on the P6 sideshift potentiometer in the fingertips / joysticks group.
Check the voltages on the potentiometer at rest
Enter the TESTER function in the menu MAT. HANDLING and check the SIDESHIFT POT and SIDE-SHIFT SWITCH parameters.
Conditions of rest:
- SIDESHIFT POT = 2.5 ± 0.2 V
- SIDESHIFT SWITCH = OFF

If the conditions of rest are different the potentiometer could be mechanically jammed or defective.
Check:
- exchange the sideshift potentiometer with the tilting potentiometer (fingertips version) and verify the correct operation through console
- exchange the sideshift potentiometer with the lifting potentiometer (joystick version) and verify the correct operation through console

If the alarm persists replace the logic unit.

E5	BAD IV POT

Condition for error detection

Failure on the P7 4th way potentiometer in the fingertips / joysticks group.
Check the voltages on the potentiometer at rest
Enter the TESTER function in the menu MAT. HANDLING and check the IV WAY POT and IV WAY SWITCH parameters.
Conditions of rest:
- IV WAY POT = 2,5 ± 0,2 V
- IV WAY SWITCH = OFF

If the conditions of rest are different the potentiometer could be mechanically jammed or defective.
Check:
- exchange the 4th way potentiometer with the sideshift potentiometer (fingertips version) and verify the correct operation through console
- exchange the 4th way potentiometer with the tilting potentiometer (joystick version) and verify the correct operation through console

If the alarm persists replace the logic unit.

E6	BAD V POT

Condition for error detection

Failure on the P8 5th way potentiometer in the fingertips / joysticks group.
Check the voltages on the potentiometer at rest
Enter the TESTER function in the menu MAT. HANDLING and check the V WAY POT and V WAY SWITCH parameters.
Conditions of rest:
- V WAY POT = 2,5 ± 0,2 V
- V WAY SWITCH = OFF

If the conditions of rest are different the potentiometer could be mechanically jammed or defective.
Check:
- exchange the 5th way potentiometer with the 4th way potentiometer

If the alarm persists replace the logic unit.

E7	DEFAULT RESTORED

Condition for error detection

Warning alarm.
The machine is in the acquisition status of the default parameters.
Wait until the end of the acquisition and do the truck reset by the key.
- If the alarm does not appear, carry out a card RESET from the display
- If the alarm does not appear, install the latest version of the software via the PROGRAMMER
- If the alarm persists replace the card.

E8	INVALIDE RESTORE STATE

Condition for error detection

Failure of the restore default parameter operation.
Repeat the operation

E9	EEPROM INCONSISTENCY

Condition for error detection

- Carry out a card RESET from the display
- If the alarm does not appear, install the latest version of the software via the PROGRAMMER
- Replace the card.

EA	MHYRIO OR PUMP ALARM

Condition for error detection

This alarm shows that an alarm is present in both logic units:Mhyrio and lifting
Check the alarms which appear on the display in order to identify where the problem is located.

EB	UNUSED

EC	CHKSUM ERROR

Condition for error detection

- Carry out a card RESET from the display
- If the alarm does not appear, install the latest version of the software via the PROGRAMMER
- If the alarm persists replace the card.

ED	MHYRIO STUFFING ERROR

Condition for error detection

The logic unit has comunication problem with Mhyrio logic unit.
Check on the dashboard others alarms.

EE	PUMP STUFFING ERROR

Condition for error detection

The logic unit does not receive the information from the lifting logic unit
If the arm board is not present, this alarm is sended from the I/O board.

EF	FW + BW

Condition for error detection

Double speed request activated.

DASHBOARD

Concerning this session, in the “Condition for error detection” description, if not expressly specified, the wording "logic unit" refers to the INSTRUMENT PANEL.

D1	**TRAC KO**

Condition for error detection

Can-bus comunication failure. The alarm appears if the display does not receive information from the traction logic unit.
Before replacing any board:
- Check if the board is powered
- Enter the SOFT VERS menu to see which card is not present on the can-bus line
- Can-bus pull-up resistance presence
• Instrument panel 180 Ohm
• MCB 180 Ohm
• Arm rest 180 Ohm
- Check the connections, pins and wiring harness on the can-bus
See paragraph SYSTEM CONFIGURATION WITH MECHANICAL/ELECTRIC DISTRIBUTOR

D2	**I/O CARD KO**

Condition for error detection

Can-bus comunication failure. The alarm appears if the display does not receive information from the I/O board.
Before replacing any board:
- Check if the board is powered
- Enter the SOFT VERS menu to see which card is not present on the can-bus line
- Can-bus pull-up resistance presence
• Instrument panel 180 Ohm
• MCB 180 Ohm
• Arm rest 180 Ohm
- Check the connections, pins and wiring harness on the can-bus
See paragraph SYSTEM CONFIGURATION WITH MECHANICAL/ELECTRIC DISTRIBUTOR

D3	**UNUSED**

D4	PUMP KO

Condition for error detection

Can-bus comunication failure. The alarm appears if the display does not receive information from the lifting logic unit.
Before replacing any board:
- Check if the board is powered
- Enter the SOFT VERS menu to see which card is not present on the can-bus line
- Can-bus pull-up resistance presence
• Instrument panel 180 Ohm
• MCB 180 Ohm
• Arm rest 180 Ohm
- Check the connections, pins and wiring harness on the can-bus
See paragraph SYSTEM CONFIGURATION WITH MECHANICAL/ELECTRIC DISTRIBUTOR

D5	MHYRIO KO

Condition for error detection

Can-bus comunication failure. The alarm appears if the display does not receive information from the MHYRIO logic unit.
Before replacing any board:
- Check if the board is powered
- Enter the SOFT VERS menu to see which card is not present on the can-bus line
- Can-bus pull-up resistance presence
• Instrument panel 180 Ohm
• MCB 180 Ohm
• Arm rest 180 Ohm
- Check the connections, pins and wiring harness on the can-bus
See paragraph SYSTEM CONFIGURATION WITH MECHANICAL/ELECTRIC DISTRIBUTOR

D6	JOY KO

Condition for error detection

Can-bus comunication failure. The alarm appears if the display does not receive information from the arm rest board.
Before replacing any board:
- Check if the board is powered
- Enter the SOFT VERS menu to see which card is not present on the can-bus line
- Can-bus pull-up resistance presence
• Instrument panel 180 Ohm
• MCB 180 Ohm
• Arm rest 180 Ohm
- Check the connections, pins and wiring harness on the can-bus
See paragraph SYSTEM CONFIGURATION WITH MECHANICAL/ELECTRIC DISTRIBUTOR

D7	BRAKE LEVEL

Condition for error detection

Brakes oil level low.
Check the wiring harness and the microswitch on the brake oil tank

D8	ERROR READ PIN

Condition for error detection

Configuration error between the I/O card and the instrument panel
If the key reset does not eliminate the alarm:
- RESET the instrument panel and the I/O card
- Install the latest version of the software via the PROGRAMMER

D9	DHU KO

Condition for error detection

Can-bus comunication failure. The alarm appears if the display does not receive information from the DHU board.
Before replacing any board:
- Check if the board is powered
- Can-bus pull-up resistance presence
  - Instrument panel 180 Ohm
  - MCB 180 Ohm
  - Arm rest 180 Ohm
- Check the connections, pins and wiring harness on the can-bus

See paragraph SYSTEM CONFIGURATION WITH MECHANICAL/ELECTRIC DISTRIBUTOR

DA	SHOCK LOCKOUT

Condition for error detection

Can-bus comunication failure. The alarm appears if the display does not receive information from the SHOCK SENSOR.
Before replacing any board:
- Check if the board is powered
- Can-bus pull-up resistance presence
  - Instrument panel 180 Ohm
  - MCB 180 Ohm
  - Arm rest 180 Ohm
- Check the connections, pins and wiring harness on the can-bus

DB	**UNUSED**

DC	**UNUSED**

DD	**SAS KO - UNUSED**

Condition for error detection

Update the truck to the last software version

DE	**UNUSED**

DF	**EEPROM ERROR**

Condition for error detection

Instrument panel memory failure.
Before replacing the instrument panel carry out the following operations:
- Reset the instrument panel using the key reset
- Clear the logbook of error codes
- RESET the instrument panel
- Install the latest version of the software via the PROGRAMMER

I/O BOARD

Concerning this session, in the “Condition for error detection” description, if not expressly specified, the wording "logic unit" refers to the I/O CONTROL BOARD.

E1	PUMP INCORRECT START

Condition for error detection

Incorrect starting procedure.
One of the switches of the oil control valve has been activated before turning on truck.
- Check:all the switches of the oil control valve
- Check the correct setting of the microswitches
- See chapter 2 “ADJUSTING THE LIFTING POTENTIOMETERS”

E2	BAD LIFT POT

Condition for error detection

Failure on the lifting potentiometer in the oil control valve.
The alarm appears if, before closing the lifting micro, the tension of the potentiometer increases of 0.78 V as regards the value stored during the regulations
Check:
- repeat the lifting potentiometer acquisition
- the adjustment and the installation of the potentiometer
- wiring loom
- the variable resistance of the potentiometer cursor using an analogic multimeter
- replace the potentiometer

See chapter 2 “ADJUSTING THE LIFTING POTENTIOMETERS”

EE	PUMP STUFFING ERROR

Condition for error detection

The I/O Board receives the information from the lifting logic unit in delay
Check:
- Check the power supply to the cards
- Enter the SOFT VERS menu to see which card is not present on the can-bus line
- Can-bus pull-up resistance presence
• Instrument panel 180 Ohm
• MCB 180 Ohm
• Arm rest 180 Ohm
- Check the connections, pins and wiring harness on the can-bus
See paragraph SYSTEM CONFIGURATION WITH MECHANICAL/ELECTRIC DISTRIBUTOR

81	INCORRECT START

Condition for error detection

Incorrect starting sequence.
The pedal or the hand direction lever has been activated before switching the truck on.
Check:
- forward, backward micros and relevant cables
See chapter 2 “ADJUSTING THE ACCELERATOR POTENTIOMETERS”

82	UNUSED

83	PEDAL WIRE KO

Condition for error detection

Failure in the signal of the accelerator potentiometer at rest. Check:
• traction potentiometer (could be damaged or not correctly calibrated)
• traction potentiometer wiring
See chapter 2 “ADJUSTING THE ACCELERATOR POTENTIOMETERS”

84	BAD MICRO SWITCH

Condition for error detection

Microswitch of the pedal or of the hand direction lever damaged.
See chapter 2 “ADJUSTING THE ACCELERATOR POTENTIOMETERS”

85	UNUSED

86	BAD VACC

Condition for error detection

Execute the acquisition of the accelerator potentiometer value again.
The alarm appears if the potentiometer is out of range.
See chapter 2 “ADJUSTING THE ACCELERATOR POTENTIOMETERS”

87	ERR SEAT

Condition for error detection

One of the functions is activated while the seat micro is open.

88	UNUSED

89	PARKING SELECTED

Condition for error detection

Parking brake switch closed and travel request activated.

90	UNUSED

8A	PARAM LOAD ERROR

Condition for error detection

The alarm appears after switching the truck on, not during traveling, or pressing the pushbutton for changing the program.

- Carry out a card RESET from the I/O card
- Install the latest version of the software via the PROGRAMMER
- Replace the logic unit.

8B	TRUCK IN ALARM

Condition for error detection

General alarm.
The logic unit detects an alarm from the traction logic unit.
Check on the dashboard others alarms.

8C	TRUCK STUFFING ERROR

Condition for error detection

Comunication problem with the traction logic unit. Check on the dashboard others alarms.

8D	UNUSED

8E	UNUSED

8F	FW + BW

Condition for error detection

Double request activated.
The forward and backward direction micros are closed in the same time.

91	CONF ERROR

Condition for error detection

Truck configuration error. The alarm is signalled after switching the machine on.
The truck remains in the pre-operational status. All function are deactivated.
The truck does the configuration automatically once all components are connected.
If on the truck is not present or not connected only one of the following components the alarm is signalled:
- Mhyrio
- Armrest board

92	BOOT ERROR

Condition for error detection

The alarm is signalled after switching the machine on.
The truck remains in the pre-operational status. All function are deactivated.
The logic unit does not received information from lifting or traction logic unit or both.

93	NOT REP ERROR

Condition for error detection

Not replay error.
The logic unit is waiting for information from the instrument panel
The machine remains in the preoperational status and all functions are disabled.
Check:
- Insulation of the machine
- RESET the instrument panel
- Install the latest version of the software via the PROGRAMMER
- Replace the dashboard

94	CHKSUM ERROR

Condition for error detection

Software error.
- Carry out a card RESET from the I/O card
- Install the latest version of the software via the PROGRAMMER
- Replace the logic unit.

C1	STOP OPEN

Condition for error detection

Failure on the stop lights.
Check the stop lights bulbs and the relative cables

C2	ANT_OPEN or POST_OPEN

Condition for error detection

Lighting system fault.
Check the light bulbs and the relative cables

C3	**UNUSED**

C4	**RETRO OPEN**

Condition for error detection

Failure on the reverse lights.
Check the reverse light bulbs and the relative cables

C5	**TILT_LOCK _FAULT**

Condition for error detection

The alarm signals a failure in the forward/backward tilting solenoid valve EV13 coil.
The coil could be opened or disconnected.
Check:
- Value in Ohm of the coils and the relevant wiring harness.
If the problem persists replace the I/O board.

C6	**LOWERING_LOCK_FAULT**

Condition for error detection

The alarm signals a failure in the lifting/lowering solenoid valve EV12 coil.
The coil could be opened or disconnected.
Check:
- Value in Ohm of the coils and the relevant wiring harness.
If the problem persists replace the I/O board.

C7	**STATIONARY_BRAKING_BUZZER_FAULT**

Condition for error detection

The alarm signals an alarms buzzer failure.
The buzzer could be open or disconnected.
Check:
- Value in Ohm of the buzzer and respective wiring harness
If the problem persists replace the I/O board.

MOTOR

Page

DRIVE MOTOR 5-2
GENERAL 5-2
REMOVING THE GEARMOTOR UNIT 5-4
ENCODER 5-7
GENERAL 5-7
TRACTION TEMPERATURE SENSOR REPLACING 5-13
LIFTING MOTOR 5-14
GENERAL 5-14
SPECIFICATIONS 5-14
ENCODER REPLACING 5-19
LIFTING TEMPERATURE SENSOR REPLACING 5-23

DRIVE MOTOR

GENERAL

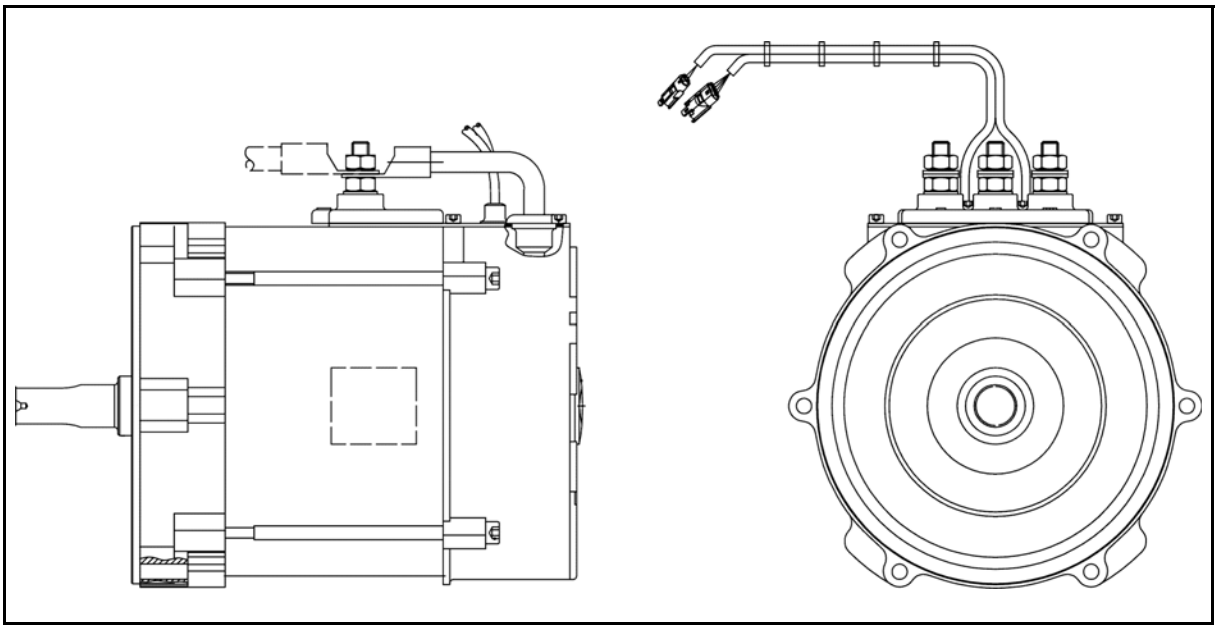

SPECIFICATIONS

DRIVE MOTOR	
MOTOR TYPE	ASYNCHRONOUS TSA200-140-085
POWER	4.9 kW
NOMINAL VOLTAGE	16 V
CURRENT	255 A
FREQUENCY	52 Hz
FACTOR POWER (cosφ)	0.81
INSULATION CLASS	F
DEGREE OF PROTECTION (IP CODE)	IP 54
SERVICE	S2-60 min
NUMBER OF POLES	4
R.P.M.	1515 rpm

COMPONENTS

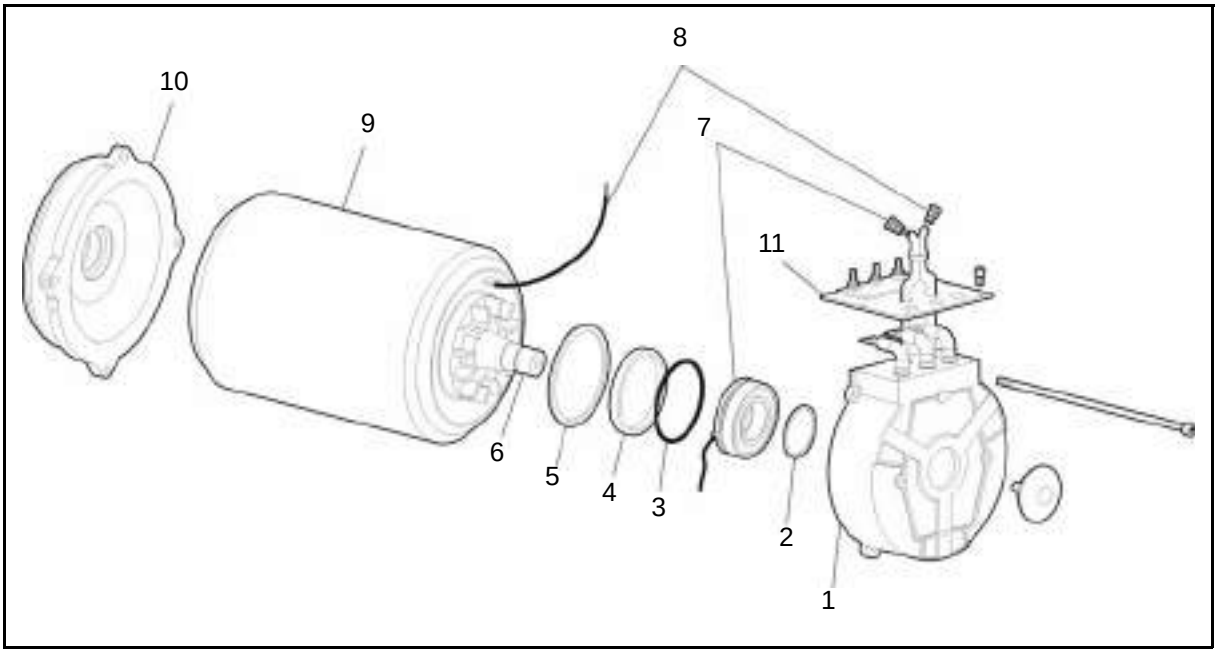

1	Cover	7	Encoder ball bearing
2	Elastic ring	8	Temperature sensor
3	Ring	9	Engine body
4	Spacer	10	Cover
5	Elastic ring	11	Terminal board
6	Driving shaft		

REMOVING THE GEARMOTOR UNIT

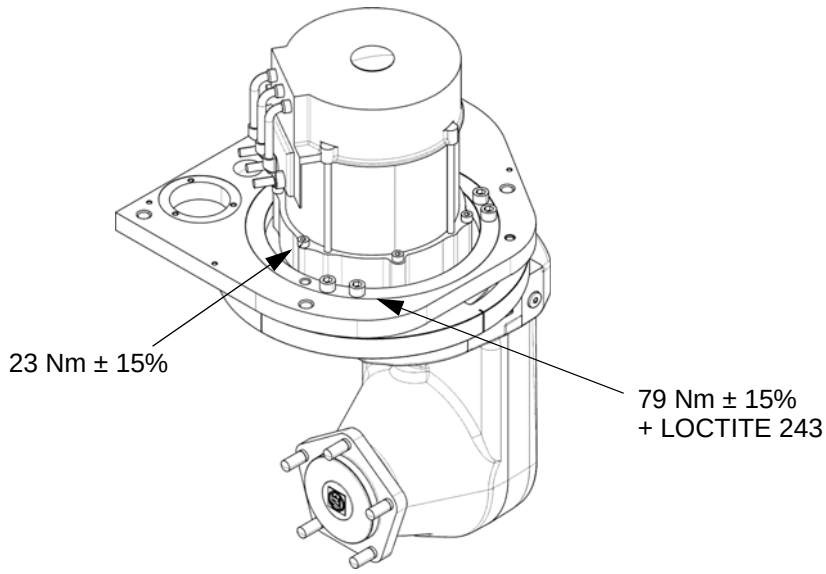

Removal procedure

1. Lift the battery cover
2. Disconnect the battery plug
3. Remove the seat by screwing off the 4 bolts under the battery cover
4. Remove the rear plastic cover
5. Remove the battery cover by disassenbling the gas spring and the 2 screw on the OHG **[Point 1]**
6. Disconnect the cables of the traction motor
7. Remove the 6 Allen screws of the traction motor **[Point 2]**
8. Connect a chain or belt to the motor **[Point 3]**
9. Remove the drive motor **[Point 4]**

Installation procedure

The reassembly procedure is the reverse of the disassembly procedure.

Point Operation

[Point 1]
Disassembly:
Remove the components in order to create the working space

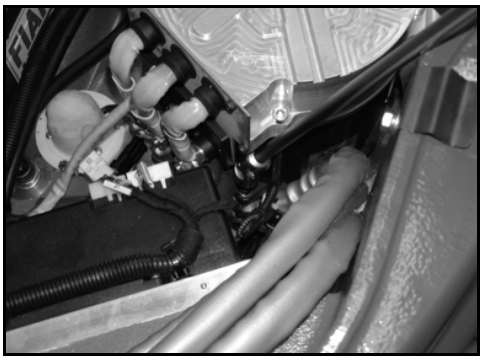

[Point 2]
Disassembly:
Remove the power cables and the wiring of the encoder sensor.
Screw out the 6 screws of the motor.

Assembly:
After the installation, tightening torque of the 6 fixing screws of drive motor:
Tightening torque = 79 Nm + Loctite 243

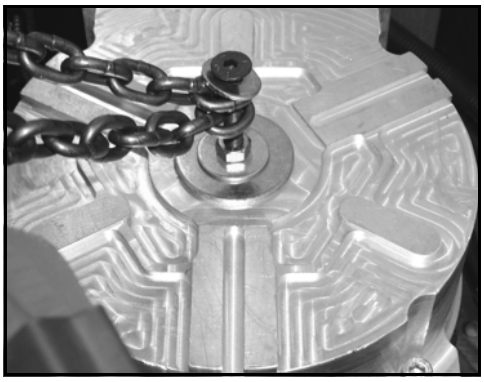

[Point 3]
Disassembly:
Connect a chain or a belt to the motor, as shown on the picture, by a screw of M8 to the threaded hole on the motor shaft

[Point 4]
Disassembly:
Lift up the motor and put it in horizontal position or in vertical position on a special support as shown in the picture, in order to avoid dangerous movements

Assembly:

After the installation, tightening torque of the 6 fixing screws of drive motor:
Tightening torque = 79 Nm + Loctite 243

ENCODER

GENERAL

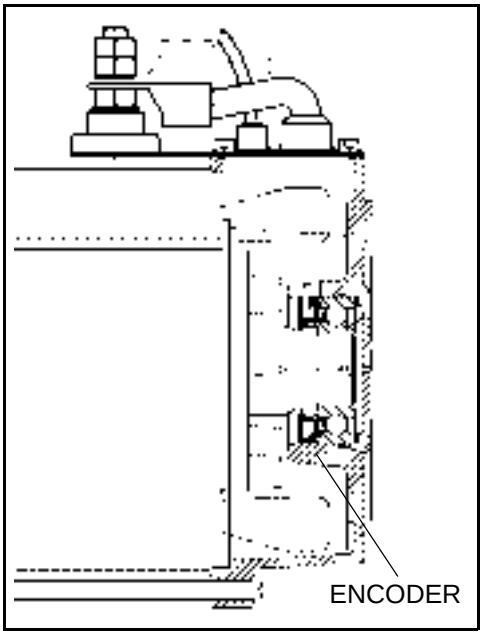

The encoder generates a feedback signal from the motor and sends it to the command logic monitoring:motor status, rpm and direction of rotation.

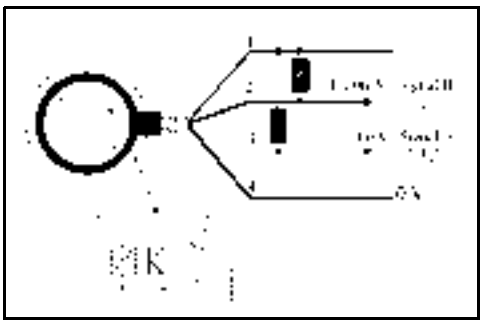

Irreversible damage:

- + V > 13 Volts
- Short circuit between the signal and the power supply
- Heating by induction
- Assembly with hammer

TRACTION ENCODER REPLACING
REMOVAL • INSTALLATION

Dismantling procedure

1. Fulfil all the traction encoder removal procedure
2. Cut the clamps that fix togheter the temperature sensor cables and the encoder **[Point 1]**
3. Press untill extract from their site the rubber seals that protect the motor power cables **[Point 2]**
4. Unscrew the nuts that fix the motor power cables and remove the same from the power supply bolts, noting the position of the 3 cables U, V and W
5. Unscrew and remove the 4 M5 screws and remove the metallic plate **[Point 3]**
6. Note the position of the cover on the stator **[Point 4]**
7. Remove the metallic plug on the upper shield and remove the seeger under it **[Point 5]**
8. Remove the 4 screws of the upper shield and the 6 motor fixing screws **[Point 6]**
9. Place the extracting bar end fix it with 2 M8x250 screws **[Point 7]**
10. Screw the screws in order to lift the stator **[Point 8]**
11. When the encoder goes out from the rotor axle unscrew the 2 screws. Remove tha bar and remove the stator
12. Remove the seeger from the shield and extract the encoder **[Point 9]**

Assembly procedure

During the installation procedure pay attention to do not damage the encoder and the relevant wiring harness:

1. Place the encoder in the inner site of the motor shield. Fix the encoder using the special seeger **[Point 10]**
2. Place the upper shield on the motor **[Point 10]** paying attention that the signs (removal procedure section 6) match
3. To pair the encoder at the stator use a spacer **[Point 11]**. Screw the screw over the spacer
4. Reassemble the seeger and the metallic plug on the upper shield. Reassemble the 4 clamps M8x250 of the upper shield **[Point 12]**
5. Insert the rubber seals that protect the power cables in their site **[Point 13]**
6. Fix the metallic plate screwing the 4 M5 screws **[Point 14]**
7. Reinsert the motor power cables U, V and W in the corresponding power supply bolts, as noted during the removal procedure, and screw the nuts that fix the power cables
8. Fulfill all the traction encoder installation procedure

Remarks:
For this procedure, see the Service Tools List

Point Operation

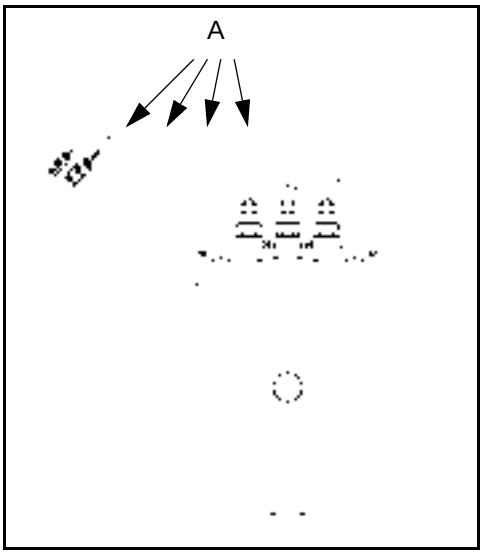

[Point 1]
Disassembly:
Cut the clamps A that fix togheter the temperature sensor cables and the encoder

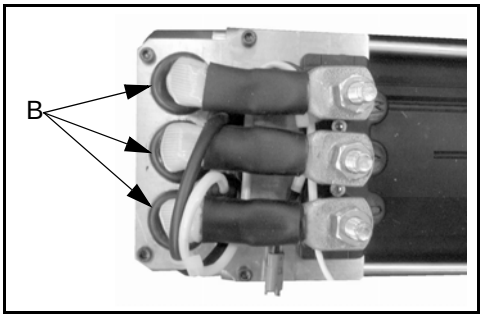

[Point 2]
Disassembly:
Press untill extract from their site the rubber seals that protect the power cables B

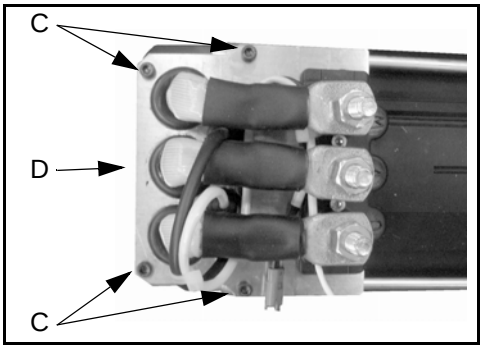

[Point 3]
Disassembly:
Unscrew and remove the 4 screws C then remove the metallic plate D

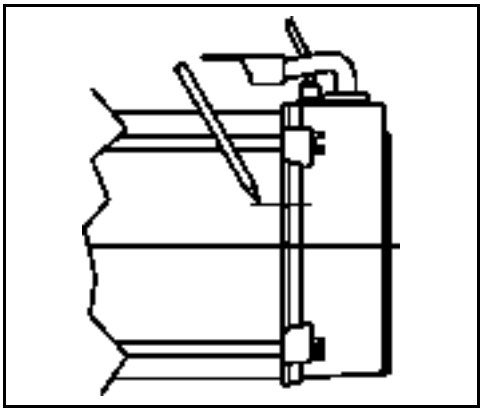

[Point 4]
Disassembly:
Note the position of the cover on the stator

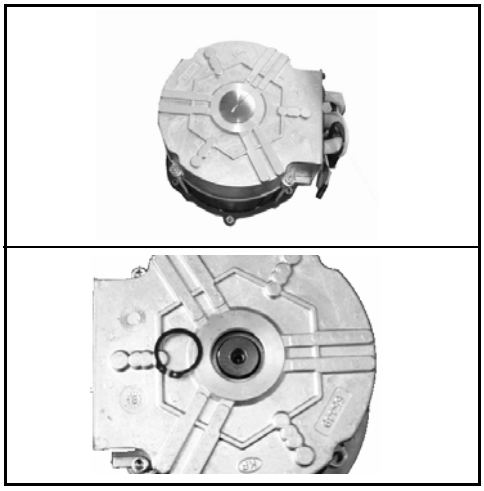

[Point 5]
Disassembly:
Remove the metallis plug on the upper shield and remove the seeger under it

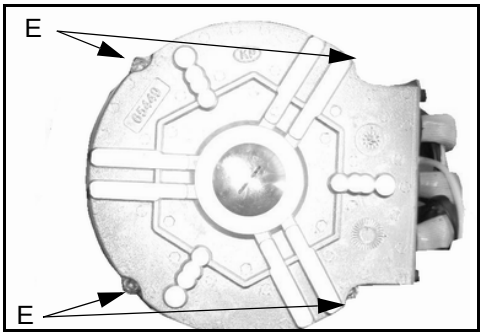

[Point 6]
Disassembly:
Remove the 4 M8x250 screws of the upper shield

[Point 7]
Disassembly:
Place the extracting bar and fix it as shown in picture

[Point 8]
Disassembly:
Screw the tension rod in order to lift the stator. When the encoder goes out from the rotor axle, remove the bar and remove the stator

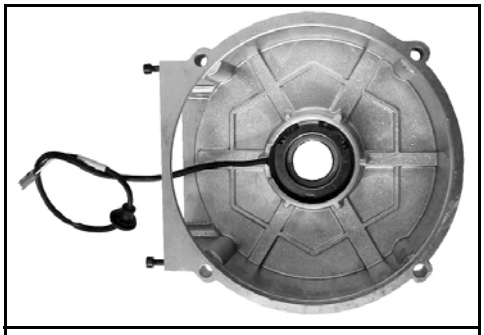

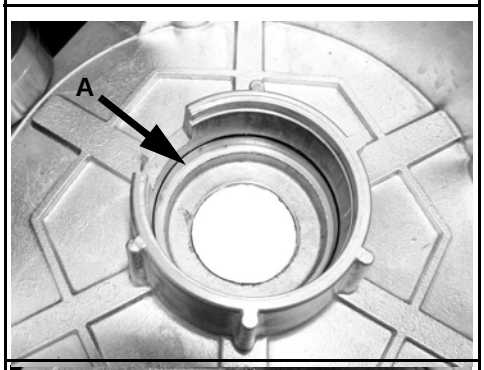

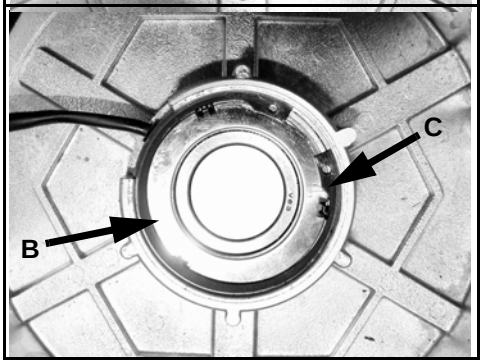

[Point 9]
Disassembly:

Remove the seeger C from the shield and extract the encoder B

Assembly:

Replace the gasket A. Place the encoder B in the inner site of the motor shield. Fix the encoder using the special seeger C

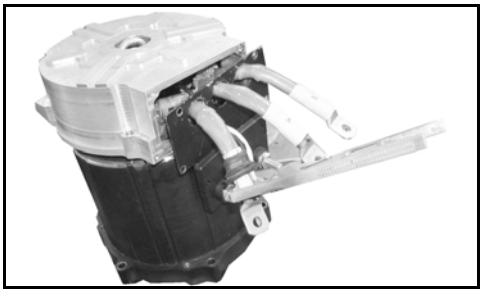

[Point 10]
Assembly:

Place the upper shield on the motor

[Point 11]
Assembly:

To pair the encoder at the stator use a stater as shown in picture (see the Service Tools List).
Screw the M8x100 screw on the strator

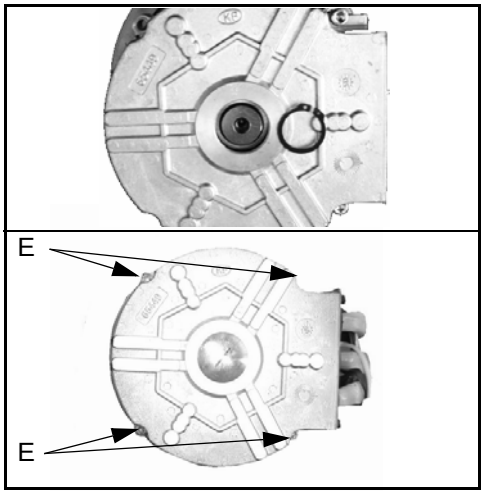

[Point 12]
Assembly:

Reassemble the seeger and the metallic plug on the upper shield.
Reassemble the 4 M8x250 screws E of the upper shield

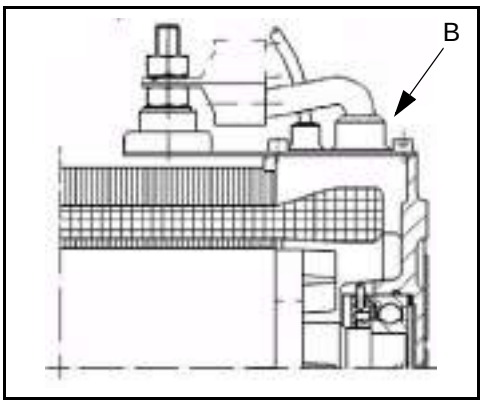

[Point 13]
Assembly:

Insert the rubber seals B that protect the power cables in their site

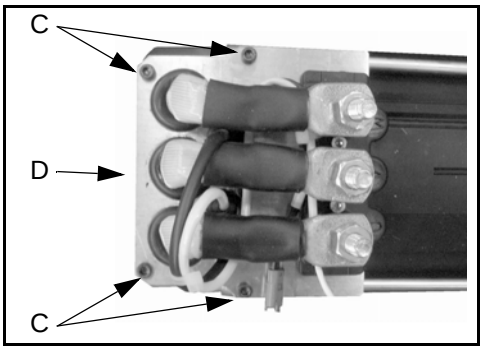

[Point 14]
Assembly:

Fix the metallic plate D screwing the 4 screws C

TRACTION TEMPERATURE SENSOR REPLACING

REMOVAL • INSTALLATION

Removal procedure

1. Fulfil all the encoder removal procedure
2. Cut the sensor wiring harness where is the fixing point of the same sensor with the stator winding **[Point 1]**
3. Insert the new sensor at contact of the stator winding, and fix it using the adhesive silicone paste for high temperature **[Point 2]**

Installation procedure

Fulfil all the traction encoder installation procedure

Point Operation

[Point 1]

Disassembly:

Cut the sensor wiring harness where is the fixing point of the same sensor with the stator winding

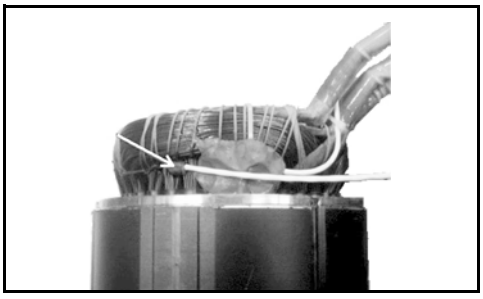

[Point 2]

Disassembly:

Insert the new sensor at contact of the stator winding and fix it using the adhesive silicone paste for high temperature (see Service Tools List)

The drying time is ~ 2 hours

LIFTING MOTOR

GENERAL

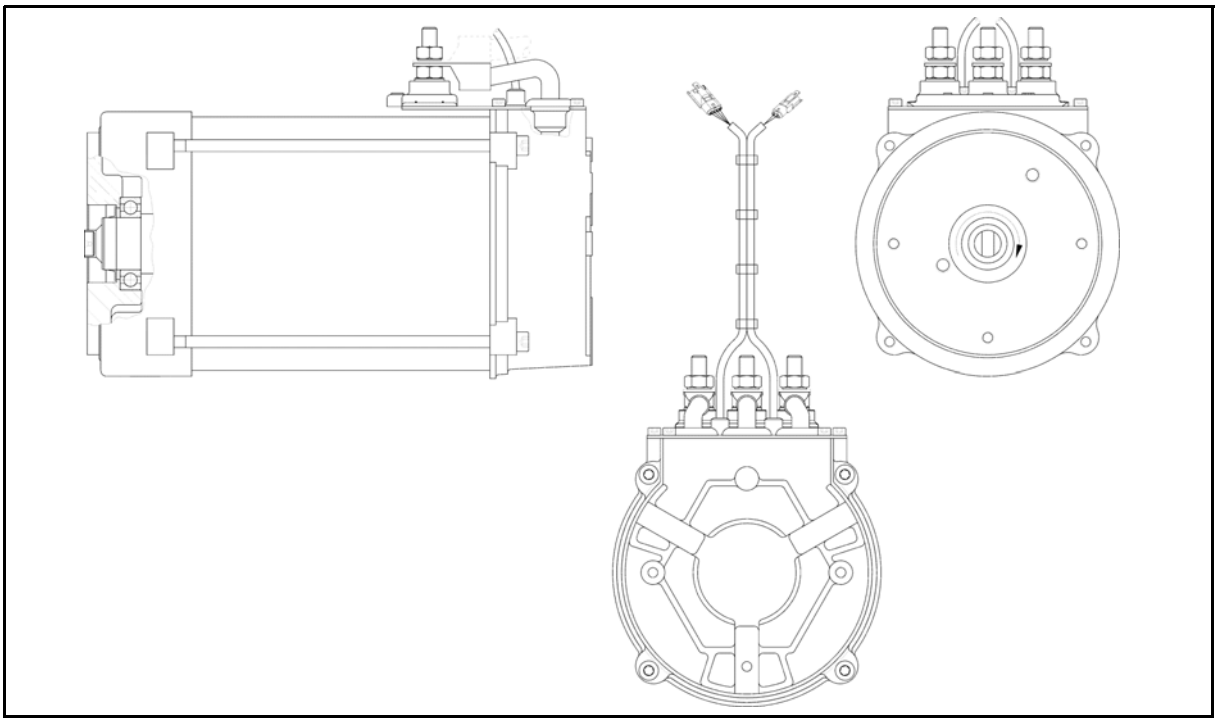

SPECIFICATIONS

LIFTING MOTOR	
MOTOR TYPE	ASYNCHRONOUS TSA170-210-033
DIMENSIONS	Ø 177 x 338,5 mm
POWER	7.5 kW
NOMINAL VOLTAGE	16 V
MAX. NOMINAL CURRENT	375 A
FREQUENCY	70 Hz
POWER FACTOR (cos phi)	0.82
EFFICIENCY (h)	88
INSULATION CLASS	H
IP	54
SERVICE	S3 - 40%
NUMBER OF POLES	4
R.P.M.	2030 rpm
PUMP CAPACITY	12,45 l/m’ (1500 rpm)

COMPONENTS

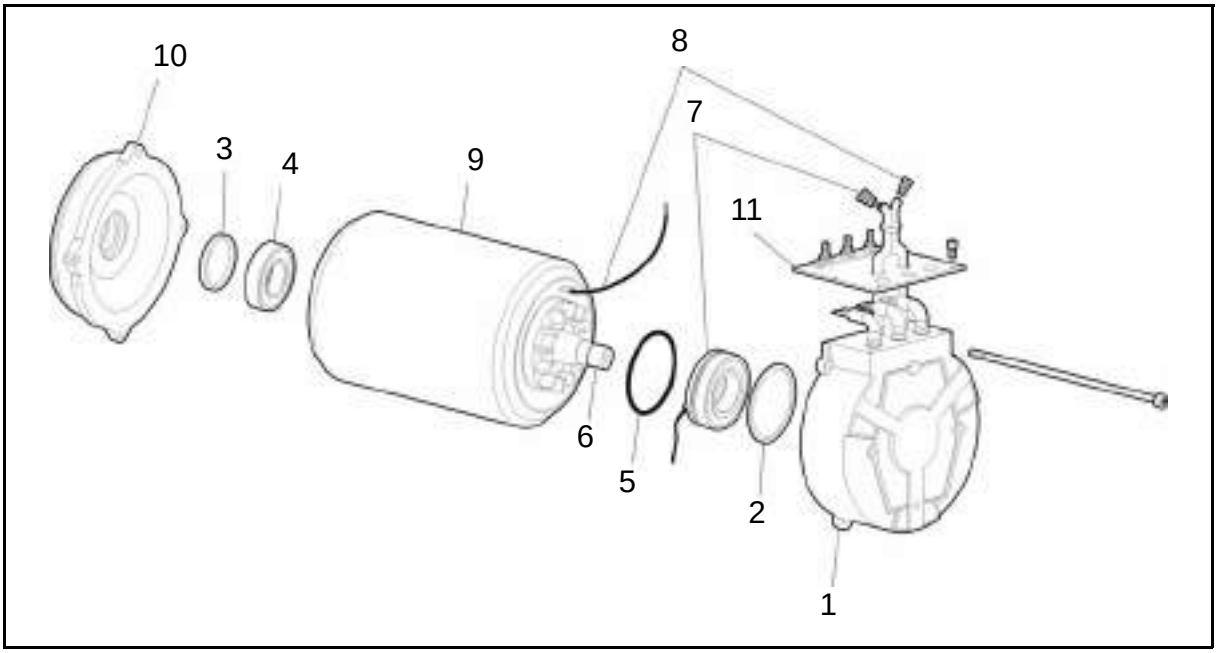

1	Cover	7	Encoder ball bearing
2	Elastic ring	8	Temperature sensor
3	Seal	9	Engine body
4	Pad	10	Cover
5	Ring	11	Terminal board
6	Driving shaft		

REMOVAL • INSTALLATION

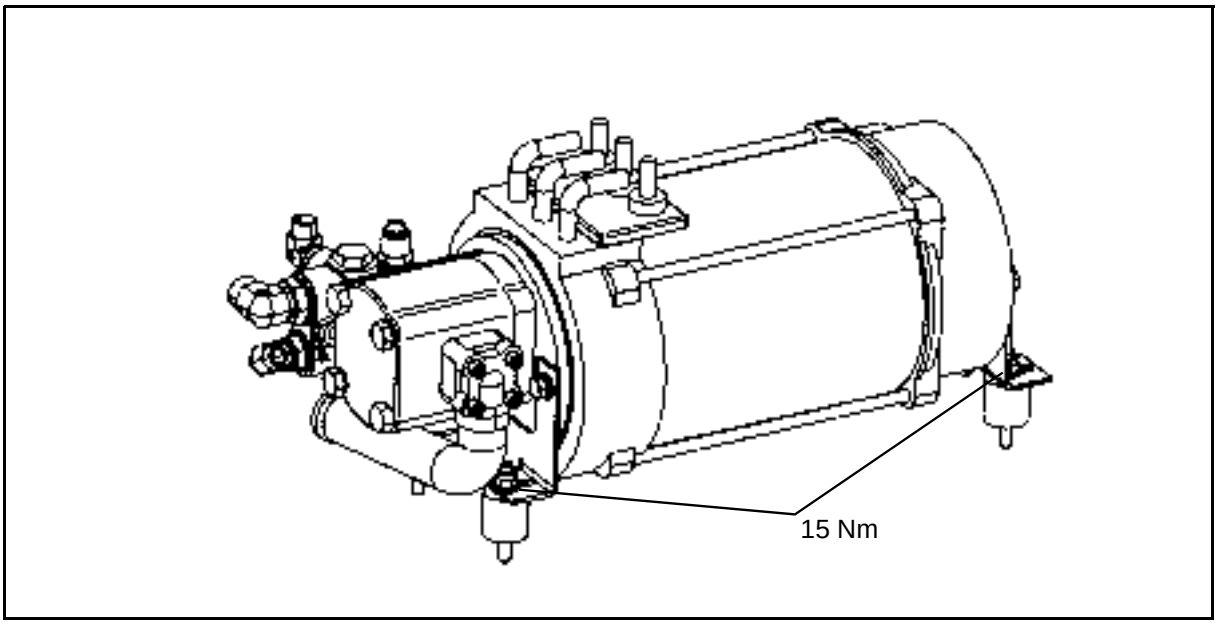

Removal procedure

1. Lift the battery cover
2. Disconnect the battery plug
3. Remove the footboard
4. Remove the 2 pedals **[Point 1]**
5. Drain out the hydraulic oil
6. Disconnect the hoses from the priority valve
7. Disconnect the inlet connection from the oil pump (tank pump) from the tank output hose (see chapter 13)
8. Remove the hydraulic oil tank **[Point 2]**
9. Remove cables of the traction motor **[Point 3]**
10. Remove the 4 nuts of the pump motor **[Point 4]**
11. Connect a chain or belt to the motor **[Point 5]**
12. Remove the lifting motor

Installation procedure

The reassembly procedure is the reverse of the disassembly procedure.

Point Operation

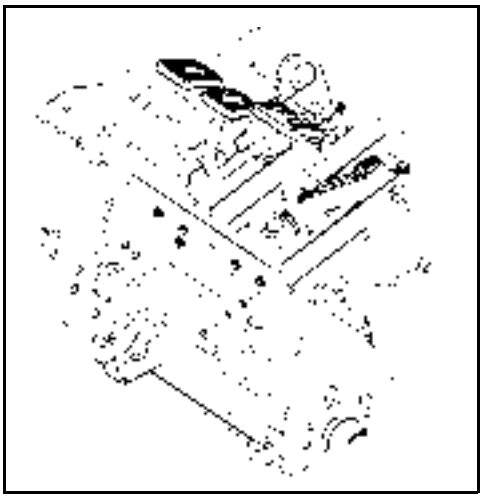

[Point 1]

Disassembly:

Disconnect the wirings of the two pedals.
Disconnect the brake hose of the brake pedal by closing it to avoid the loosing of the brake oil. Remove the 3 screws per pedal from the front of the frame.

Assembly:

After installation, tightening torque of the pedal bolts = 24 Nm

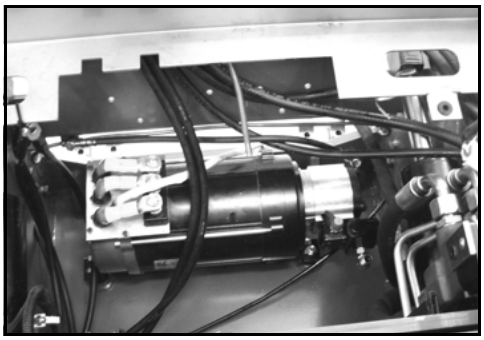

[Point 2]

Disassembly:

Remove the hydraulic oil tank by removing the 2 bolts on the frame

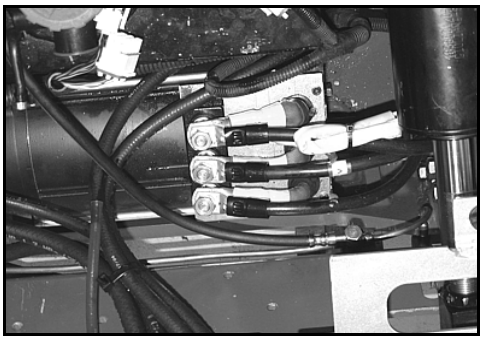

[Point 3]

Disassembly:

Disconnect the 3 cables from the pump motor and the wiring of the encoder sensor

Assembly:

After installation, tightening torque of the cables bolts = 15 Nm

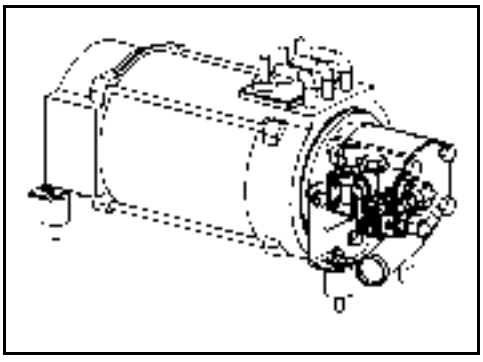

[Point 4]

Disassembly:

Remove the 4 nuts from the fixing brackets of the pump motor with the frame

Assembly:

After installation, tightening torque of the 4 fixing bolts = 15 Nm

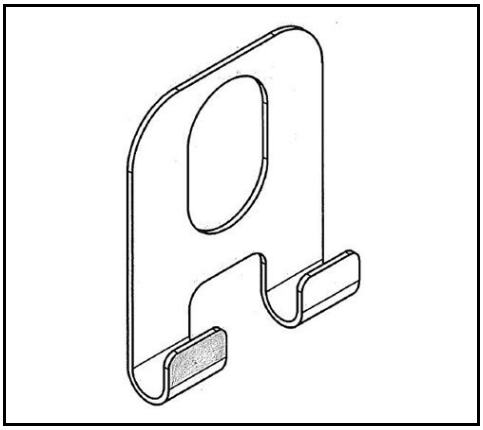

[Point 5]

Disassembly:

Chain or belt is needed to extract the pump motor from the truck

ENCODER REPLACING

REMOVAL • INSTALLATION

Dismantling procedure

1. Fulfill all the lifting motor removal procedure
2. Cut the clamps that fix togheter the temperature sensor cables and the encoder **[Point 1]**
3. Press untill extract from their site the rubber seals that protect the motor power cables **[Point 2]**
4. Unscrew the nuts that fix the motor power cables and remove the same from the power supply bolts, noting the position of the 3 cables U, V and W
5. Unscrew and remove the 4 M5 screws and remove the metallic plate **[Point 3]**
6. Note the position of the cover on the stator **[Point 4]**
7. Unscrew and remove the 4 M8 screws **[Point 5]**
8. Remove the cover **[Point 6]**
9. Extract the encoder using the special extractor **[Point 7]**

Assembly procedure

During the installation procedure pay attention to do not damage the encoder and the relevant wiring harness:

1. Insert the encoder on the motor axle **[Point 8]**
2. Insert the cover on the motor paying attention that the signs (removal procedure section 6) match; pay attention to do not press the temperature sensor cables and the encoder **[Point 9]**
3. Insert the rubber seals that protect the power cables in their site **[Point 10]**
4. Fix the cover at the motor screwing the 4 M8 screws **[Point 11]**
5. Fix the metallic plate screwing the 4 M5 screws **[Point 12]**
6. Reinsert the motor power cables U, V and W in the corresponding power supply bolts, as noted during the removal procedure, and screw the nuts that fix the power cables
7. Fix togheter with clamps the cables of the temperature sensor and the encoder **[Point 13]**
8. Fulfill all the lifting motor installation procedure

Point Operation

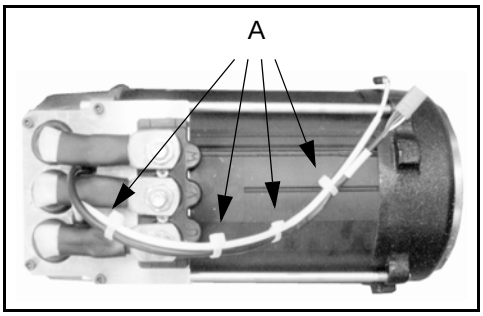

[Point 1]

Disassembly:

Cut the clamps A that fix togheter the temperature sensor cables and the encoder

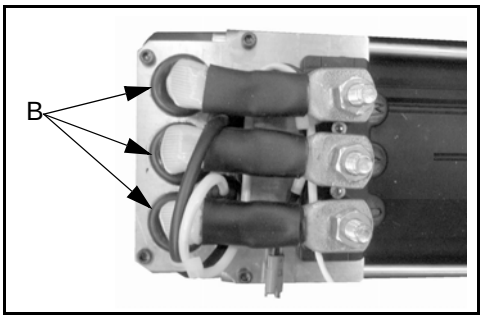

[Point 2]

Disassembly:

Press untill extract from their site the rubber seals that protect the power cables B

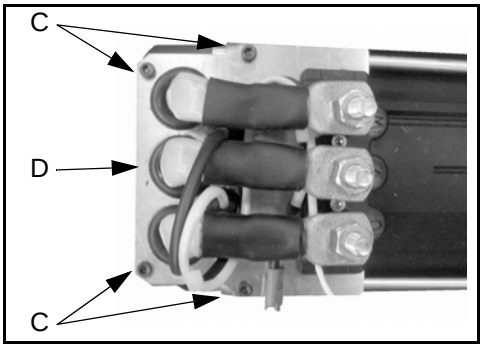

[Point 3]

Disassembly:

Unscrew and remove the 4 screws C then remove the metallic plate D

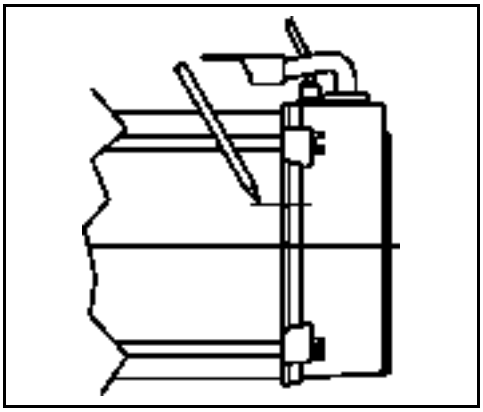

[Point 4]

Disassembly:

Note the position of the cover on the stator

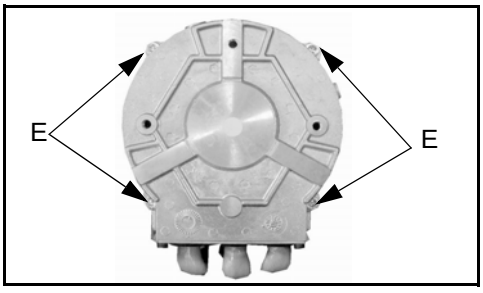

[Point 5]

Disassembly:

Unscrew and remove the 4 screws E

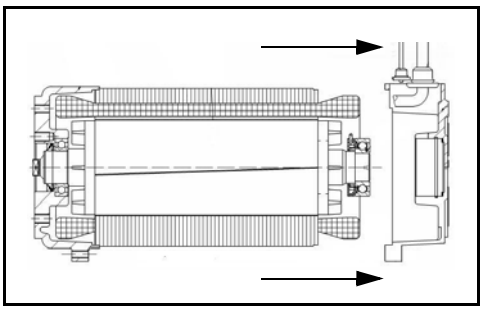

[Point 6]
Disassembly:
Remove the cover

[Point 7]
Disassembly:
Extract the encoder using the special extractor

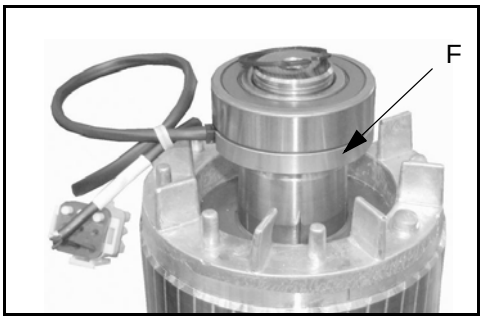

[Point 8]
Assembly:
Insert the encoder on the motor axle with the part relevant to the sensor F towards the rotor. Pay attention not to damage the encoder then press exclusively on the internal ring of the sphere ball bearing that support the encoder

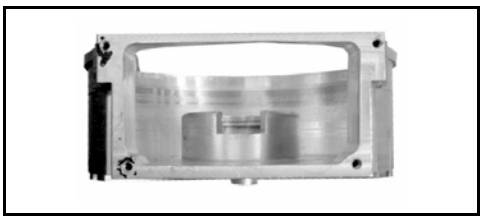

[Point 9]
Assembly:
Insert the cover on the motor paying attention that the signs (removal procedure section 6) match; pay attention to do not press the temperature sensor cables and the encoder

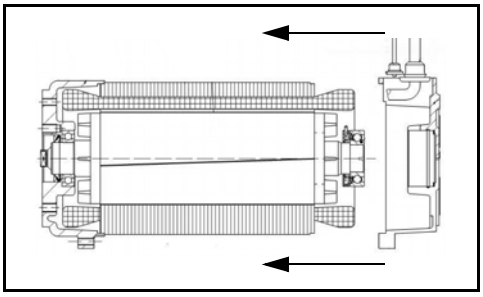

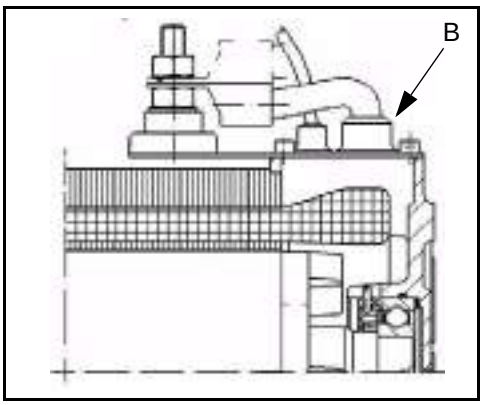

[Point 10]
Assembly:
Insert the rubber seals B that protect the power cables in their site

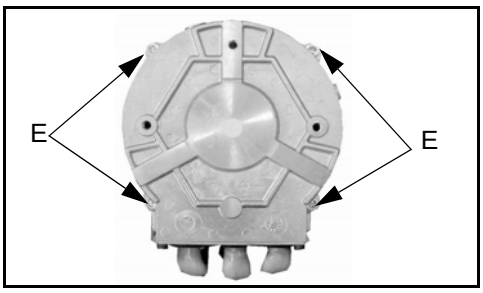

[Point 11]
Assembly:
Fix the cover onto the motor screwing the 4 screws E

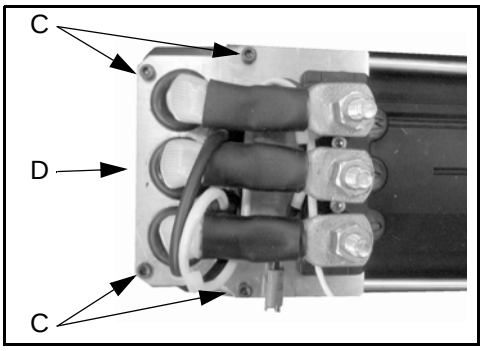

[Point 12]
Assembly:
Fix the metallic plate D screwing the 4 screws C

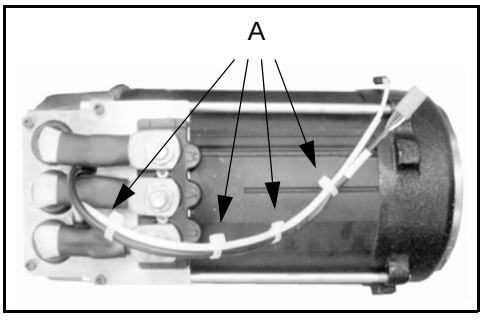

[Point 13]
Assembly:
Fix together with clamps the cables of the temperature sensor and the encoder

LIFTING TEMPERATURE SENSOR REPLACING

REMOVAL • INSTALLATION

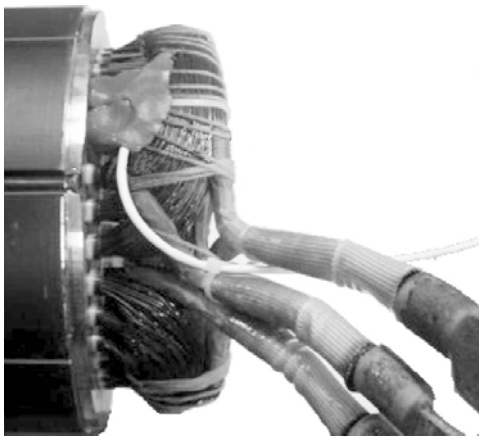

Removal procedure

1. Execute the removal procedure of the lifting motor encoder from section 1 to section 8
2. Cut the sensor wiring harness where is the fixing point of the same sensor with the stator winding **[Point 1]**
3. Insert the new sensor at contact of the stator winding, and fix it using the adhesive silicone paste for high temperature **[Point 2]**

Installation procedure

Execute the installation procedure of the lifting motor encoder from section 2 to section 8.

Point Operation

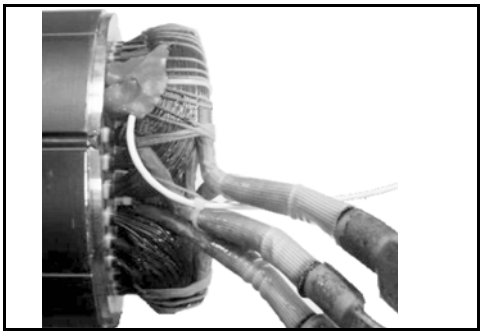

[Point 1]

Disassembly:

Cut the sensor wiring harness where is the fixing point of the same sensor with the stator winding

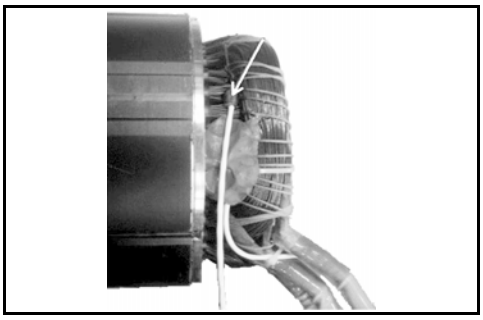

[Point 2]

Disassembly:

Insert the new sensor at contact of the stator winding and fix it using the adhesive silicone paste for high temperature

The drying time is ~ 2 hours

DRIVE UNIT & REAR AXLE

Page

TRANSMISSION 6-2

GENERAL 6-2

SPECIFICATIONS 6-3

COMPONENTS 6-3

REAR AXLE & DRIVE UNIT 6-4

TRANSMISSION

GENERAL

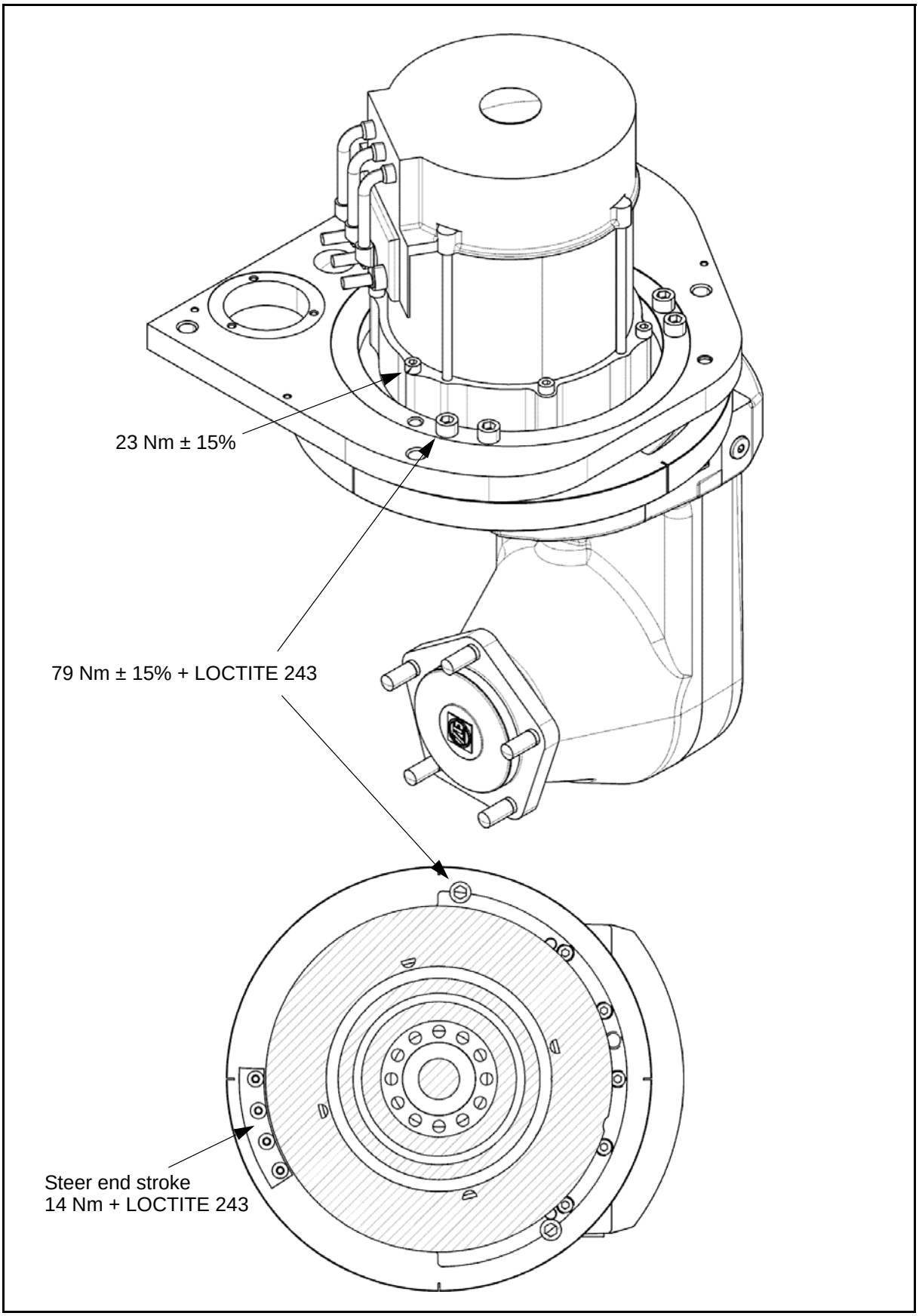

SPECIFICATIONS

Item \ Load capacity	1.0t	1.25t	1.5t
Total reduction ratio	1:27	←	←
Rear / Front tyre size C/SE/PN (Cushion / Super Elastic / Pneumatic)	457 × 152 / 18 x 7-8 / 18 x 7-8	←	←

COMPONENTS

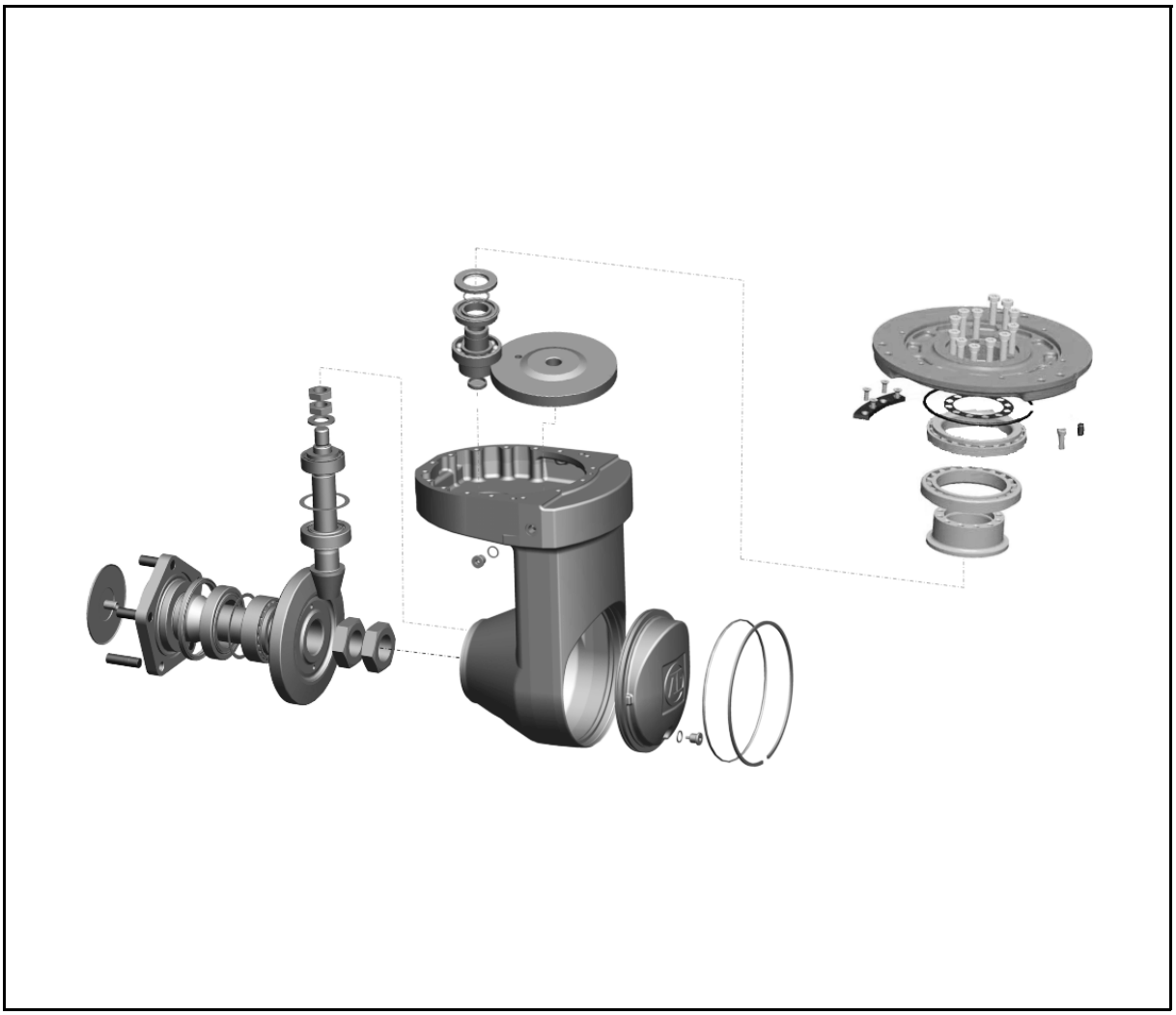

REAR AXLE & DRIVE UNIT

DISASSEMBLY • REASSEMBLY

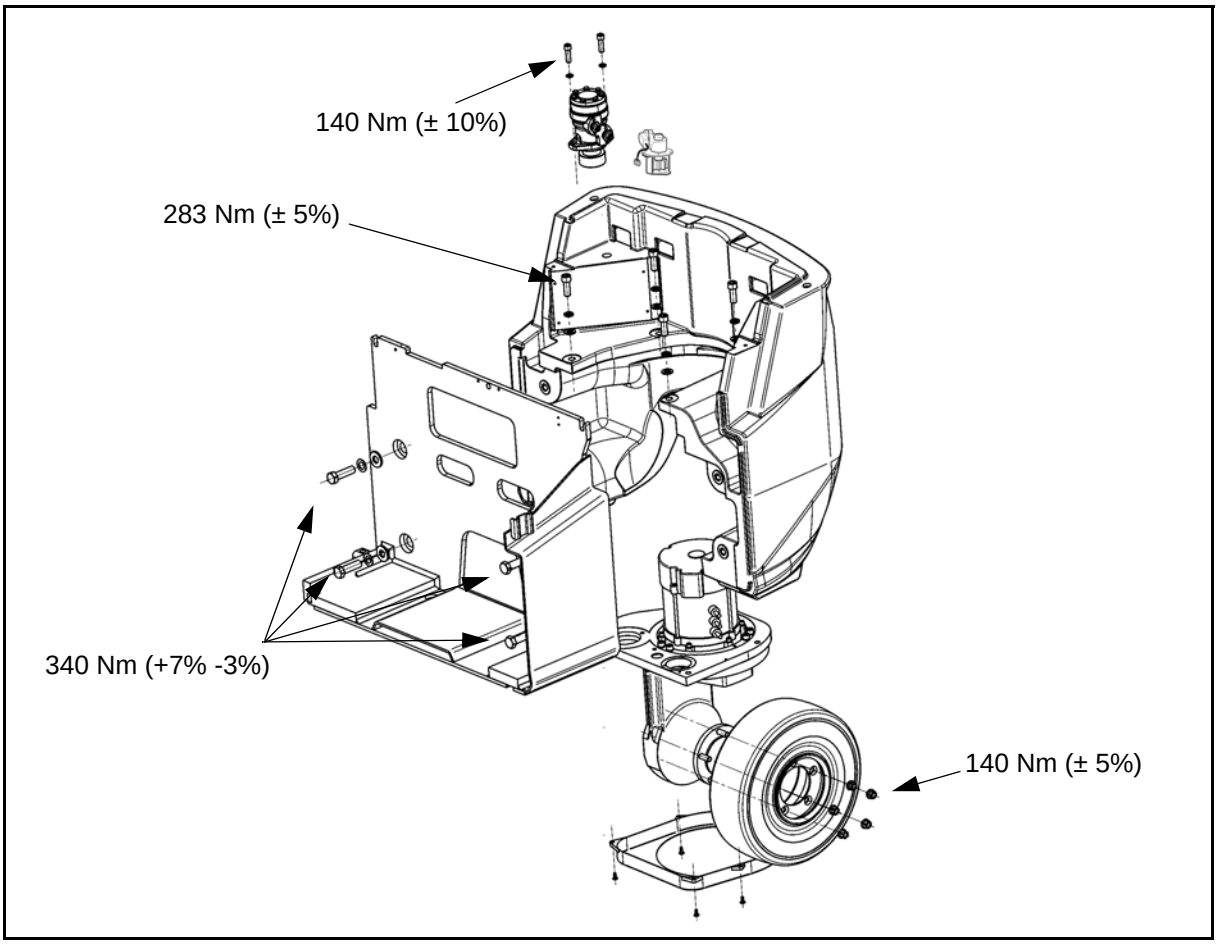

Disassembly Procedure

1. Disconnect the battery plug
2. Connect the chains on the mast **[Point 1]**
3. Remove the bolts of the mast **[Point 2]**
4. Remove the mast
5. Remove the pins from the tilting cylinders **[Point 3]**
6. Remove the seat by remove the 4 bolts under the battery cover
7. Remove the rear plastic cover
8. Remove the battery cover by removing the gas spring and the 2 bolts on the OHG **[Point 4]**
9. Disconnect the cables of the traction motor and remove the 6 screws **[Point 5]**
10. Connect a chain or belt to the motor **[Point 6]**
11. Remove the traction motor
12. Remove the 4 screws of the plastic bottom cover of the drive unit **[Point 7]**
13. Jack up the back of the vehicle **[Point 8]**
14. Put a hand-pallet under the backward wheel
15. Remove the 6 bolts of the rear axle **[Point 9]**
16. Extract the rear axle **[Point 10]**

Reassembly Procedure

The installation procedure is the reverse of the removal procedure.

Notes:
Pay attention to the teethes of the hydraulic motor and potentiometer during the reassembly of the drive unit

Nots:
- **Type and quantity of gear oil**

Type	STD	Mobilube HD 80 W-90
	Cold storage type	Mobilube 1SHC 75 W-90
Quantity	6,2 ℓ	

- **Type of grease**

STD	Mobiltemp SHC 100
Cold storage type	

Point Operations

[Point 1]
Disassembly:
Lower completely down the mast.
Connect the chain on the showed before removing the mast.
Disconnect the hydraulic hoses from the mast (lifting, tilting, side shift, …)

[Point 2]
Disassembly:
Remove the 4 bolts that fix the mast to the frame from the bottom

Reassembly:
After installation, tightening torque of the 4 screws of the mast = **83 Nm**

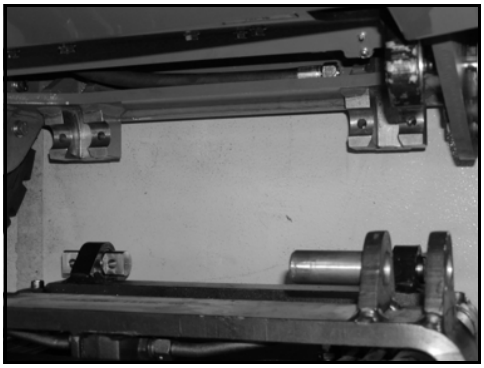

[Point 3]
Disassembly:
Remove the 2 screws of the safety plates and then the 2 pins of the tilting cylinders (it is necessary to remove the mast to avoid the vehicle overturning while lifted up on the back side)

Reassembly:
After installation, tightening torque of the 2 screws of the safety plates for the pins of tilting cylinders = **24 Nm**

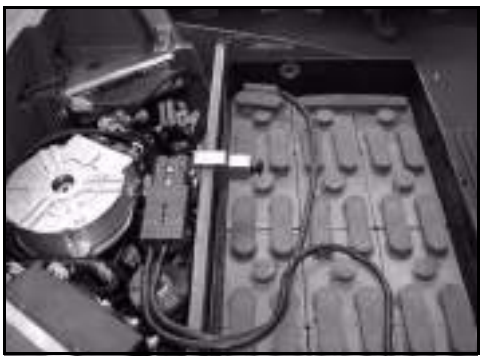

[Point 4]
Disassembly:

Remove the battery cover by removing the gas spring and the 2 bolts on the OHG

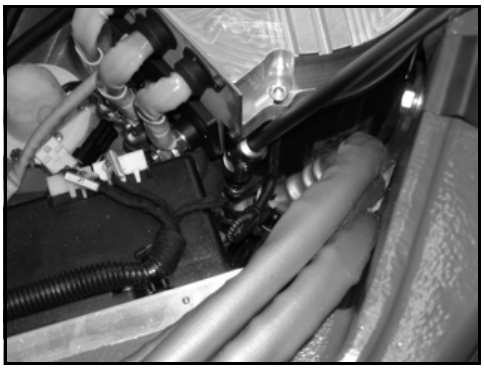

[Point 5]
Disassembly:

Remove the power cables and the wiring of the encoder sensor.
Screw out the 6 screws of the motor

Reassembly:

After installation, tightening torque of the 6 screws of the motor = **40 Nm**

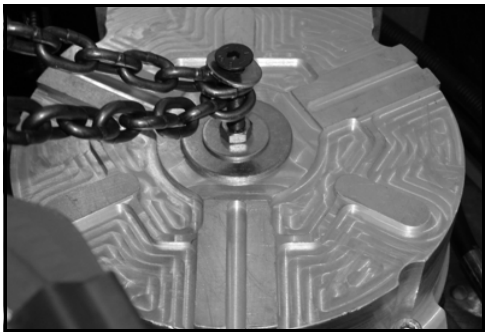

[Point 6]
Disassembly:

Connect a chain or belt to the motor, as showed on the picture, by a screw of M8 to the treaded hose on the rotor of the motor.
Lift up the motor and put it in horizontal position or in vertical position with a special support, as showed in the picture, in order to avoid dangerous movement of the rotor

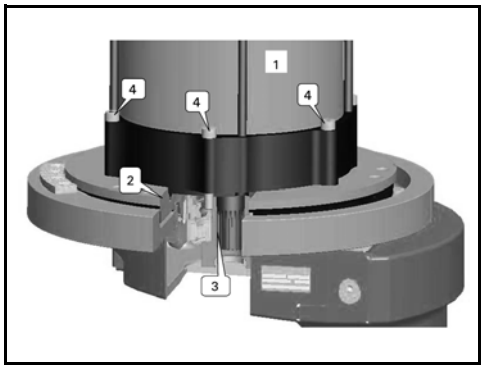

Reassembly:

Insert carefully the drive shaft of electric motor (3) into the base (2) rotating the motor (1) to make easier the assembly on the groove of hub

[Point 7]
Disassembly:
Remove the 4 screws of the plastic bottom cover of the drive unit

[Point 8]
Disassembly:
Jack up the back of the vehicle from the counterweight by using a chain (required lifting measure about 400 mm)

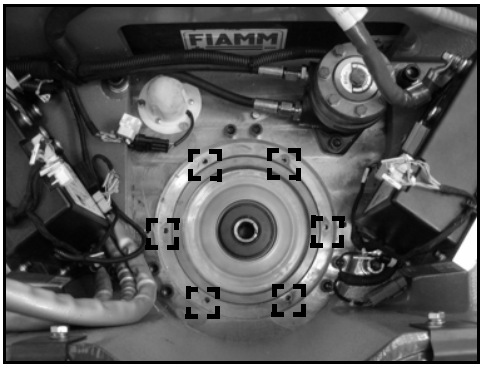

[Point 9]
Disassembly:
Remove the 6 screws of the drive unit

Reassembly:
After installation, tightening torque of the 6 screws of the drive unit = **79 Nm**

[Point 10]
Disassembly:
Extract the complete drive unit by using the hand-pallet

STEERING SYSTEM

Page

STEERING SYSTEM 7-2

COMPONENTS 7-2

HYDRAULIC DIAGRAM (mechanical distributor version) 7-3

HYDRAULIC DIAGRAM (electro-proportional distributor version) 7-4

POWER STEERING (ORBITROL) 7-5

SPECIFICATIONS 7-5

PRIORITY VALVE 7-7

HYDRAULIC MOTOR 7-9

STEERING POTENTIOMETER 7-11

STEERING SYSTEM

COMPONENTS

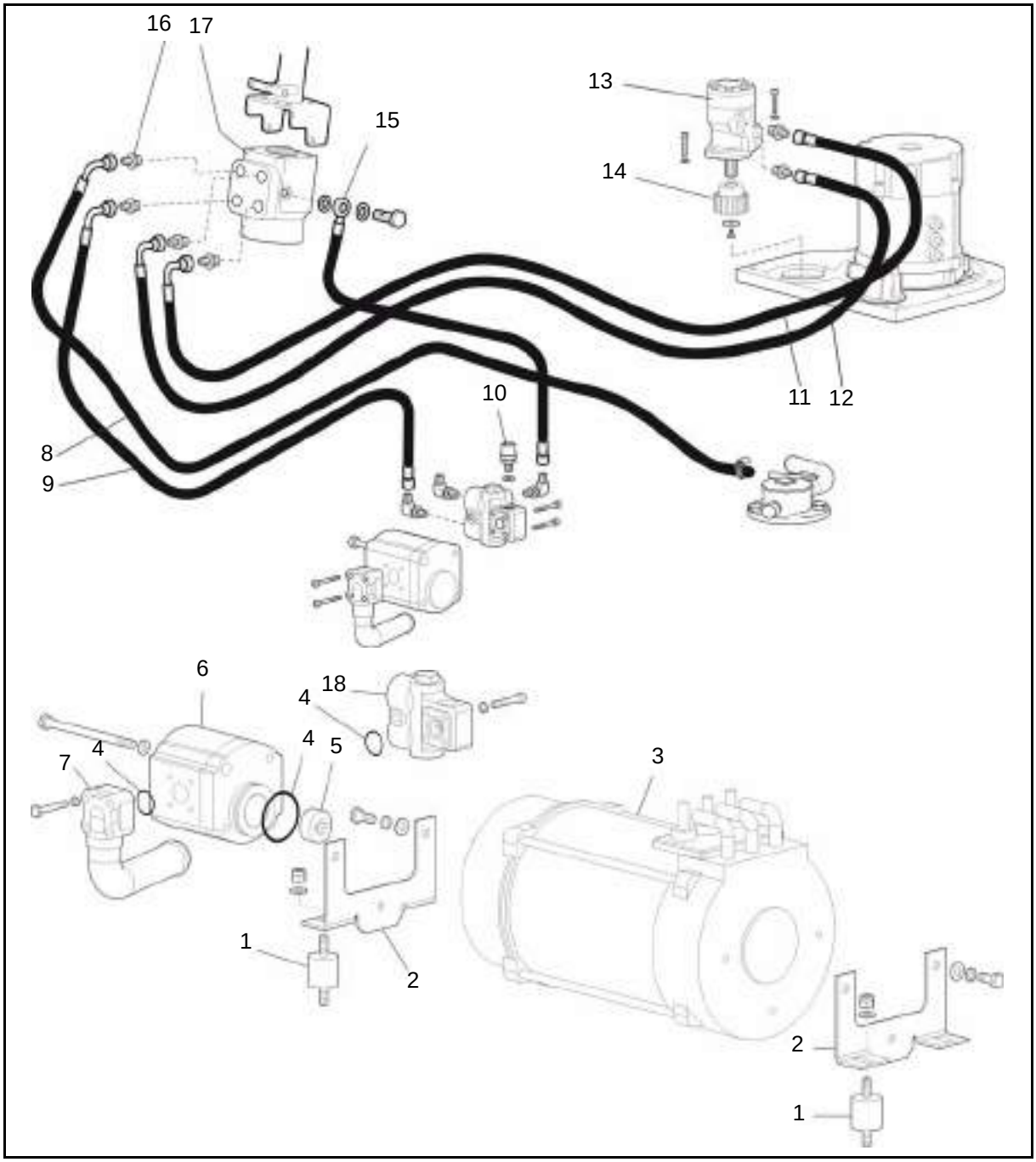

1	Vibration damping	10	Pressure socket
2	Bracket	11	R channel
3	Motor	12	L channel
4	O-rings	13	Steering motor
5	Joint	14	Pinion
6	Pump	15	LS channel
7	Suction	16	Nipple
8	T channel	17	Orbitrol
9	CF channel	18	Priority valve

HYDRAULIC DIAGRAM (mechanical distributor version)

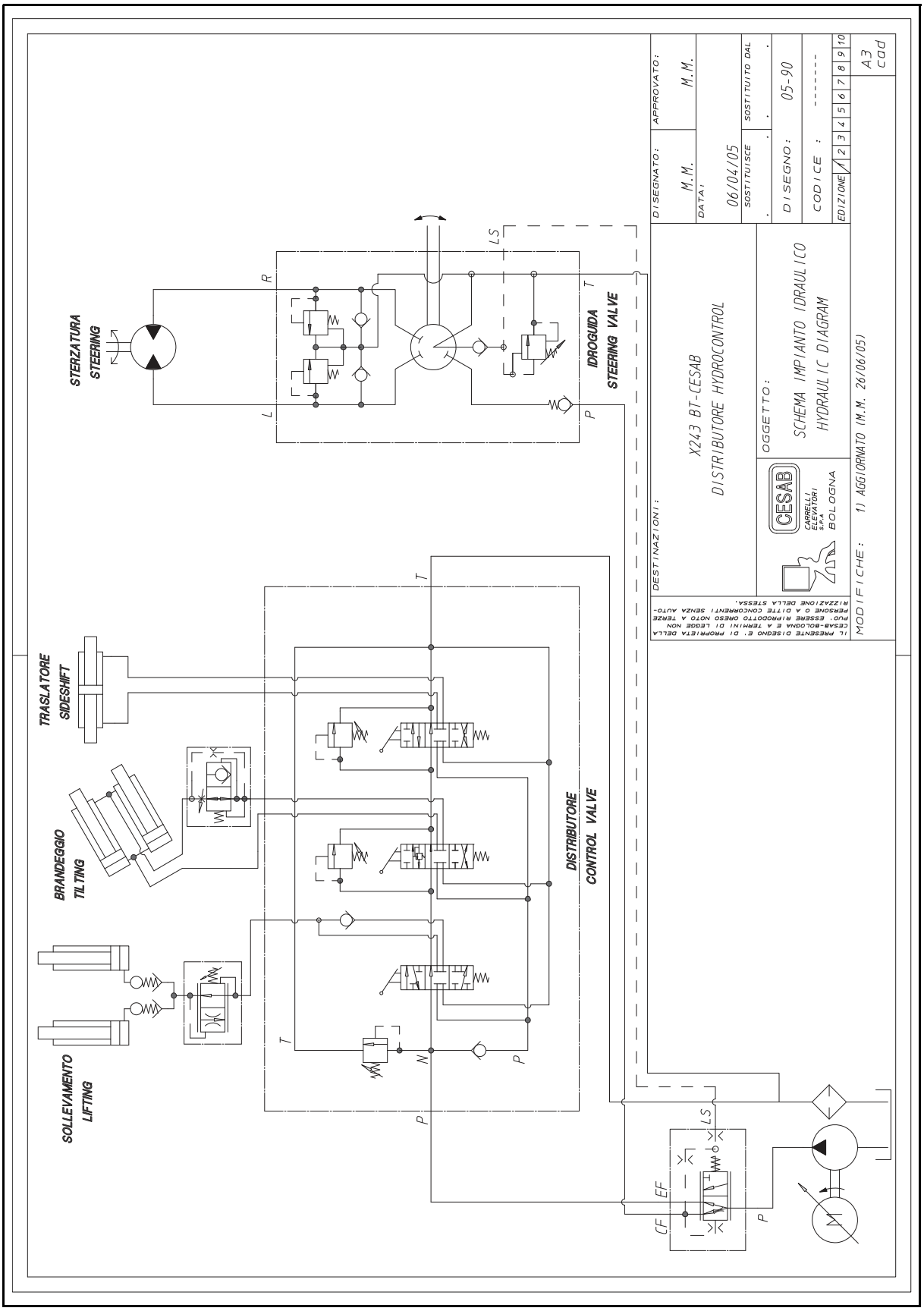

HYDRAULIC DIAGRAM (electro-proportional distributor version)

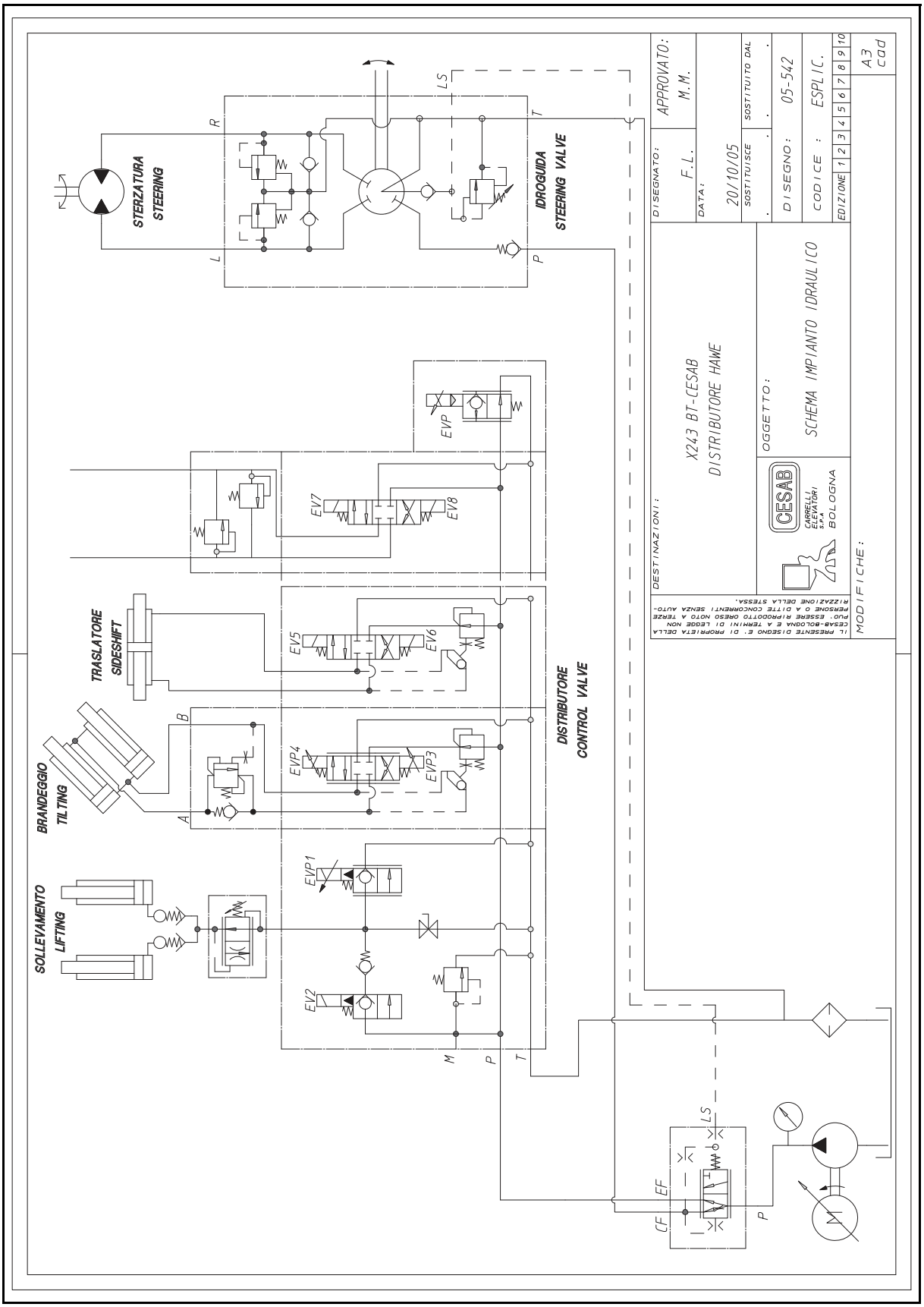

POWER STEERING (ORBITROL)

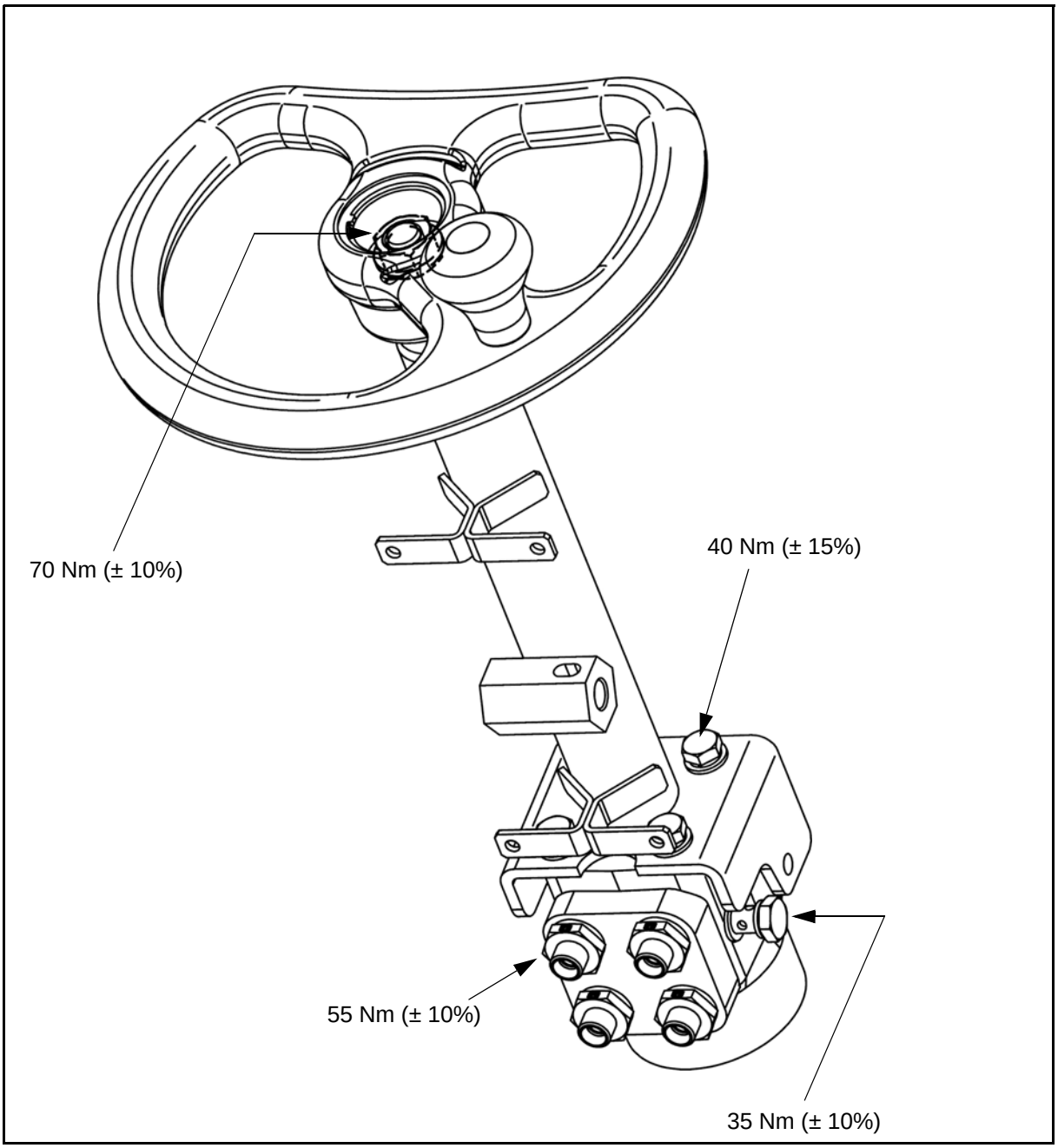

SPECIFICATIONS

Parts		Capacity	1.0 - 1.25 - 1.5 t
Steering wheel diameter		mm	360
Steering wheel clearence		mm	20 ~ 50
Power steering type			Dynamic
Dynamic power steering	Discharge	cc (cm^3)	50.0
	Oil flow rate:	ℓ·min	8
	Maximum pressure:	Bar	~100

REMOVAL • INSTALLATION

Removal procedure

1. Lower the forks to the ground
2. Disconnect the battery plug
3. Remove the cover from the front dashboard
4. Remove the steering column cover
5. Remove the hydraulic steering (orbitrol)

Installation procedure

The reassembly procedure is the reverse of the disassembly procedure.

Remarks:

- **Add grease at the coupling between the steering shaft and steering valve**
- **Install the piping with the angle shown in the illustration below:**

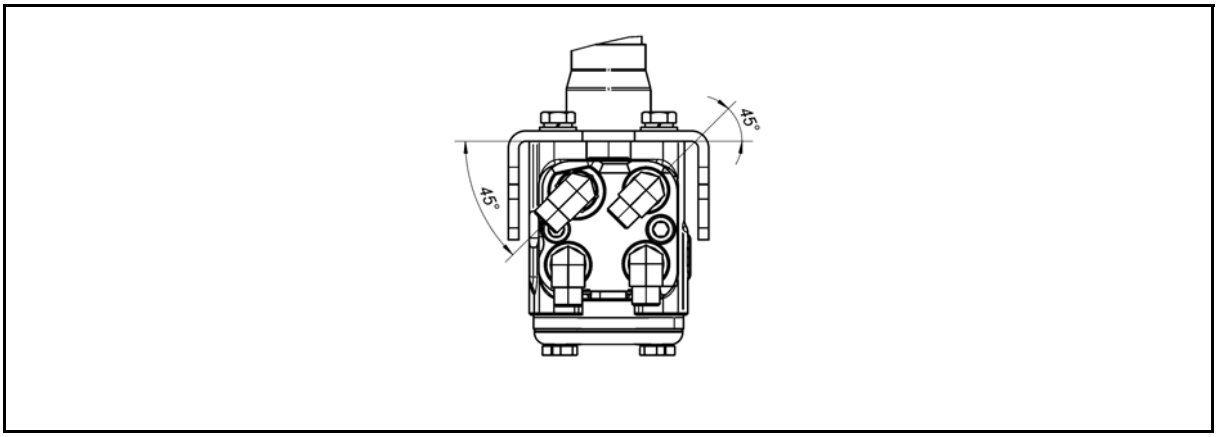

INSPECTION • ADJUSTMENT

Pressure relief valve

1. Connect a manometer to the priority valve pressure gauge
2. Turn the wheel as far as it will go (max. steering system pressure)
3. Read the maximum pressure on the manometer
4. Adjust the maximum pressure screws on the Orbitrol

Maximum standard pressure: ~ 100 Bar

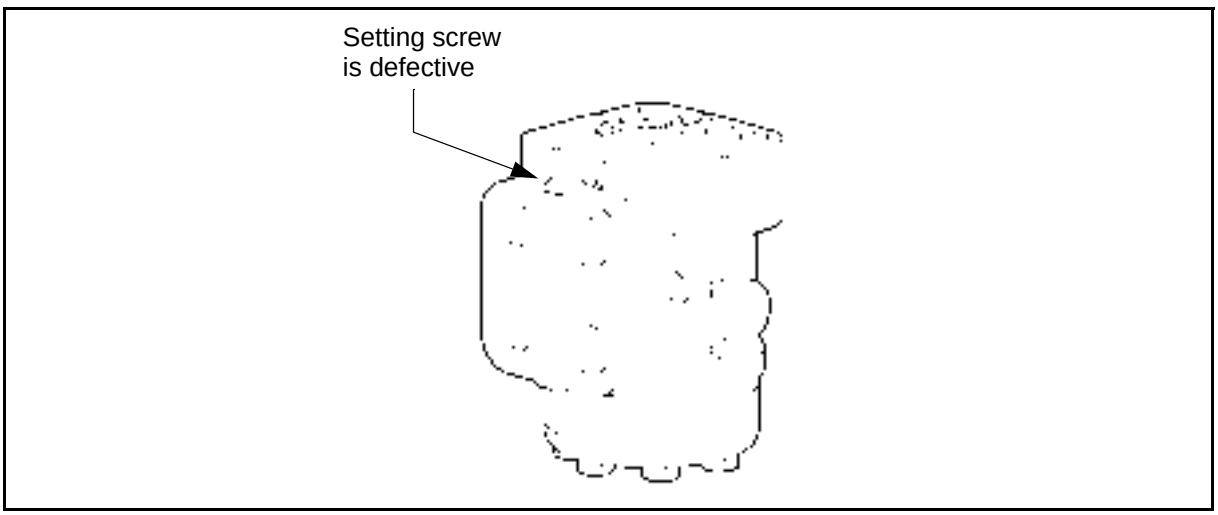

PRIORITY VALVE

GENERAL

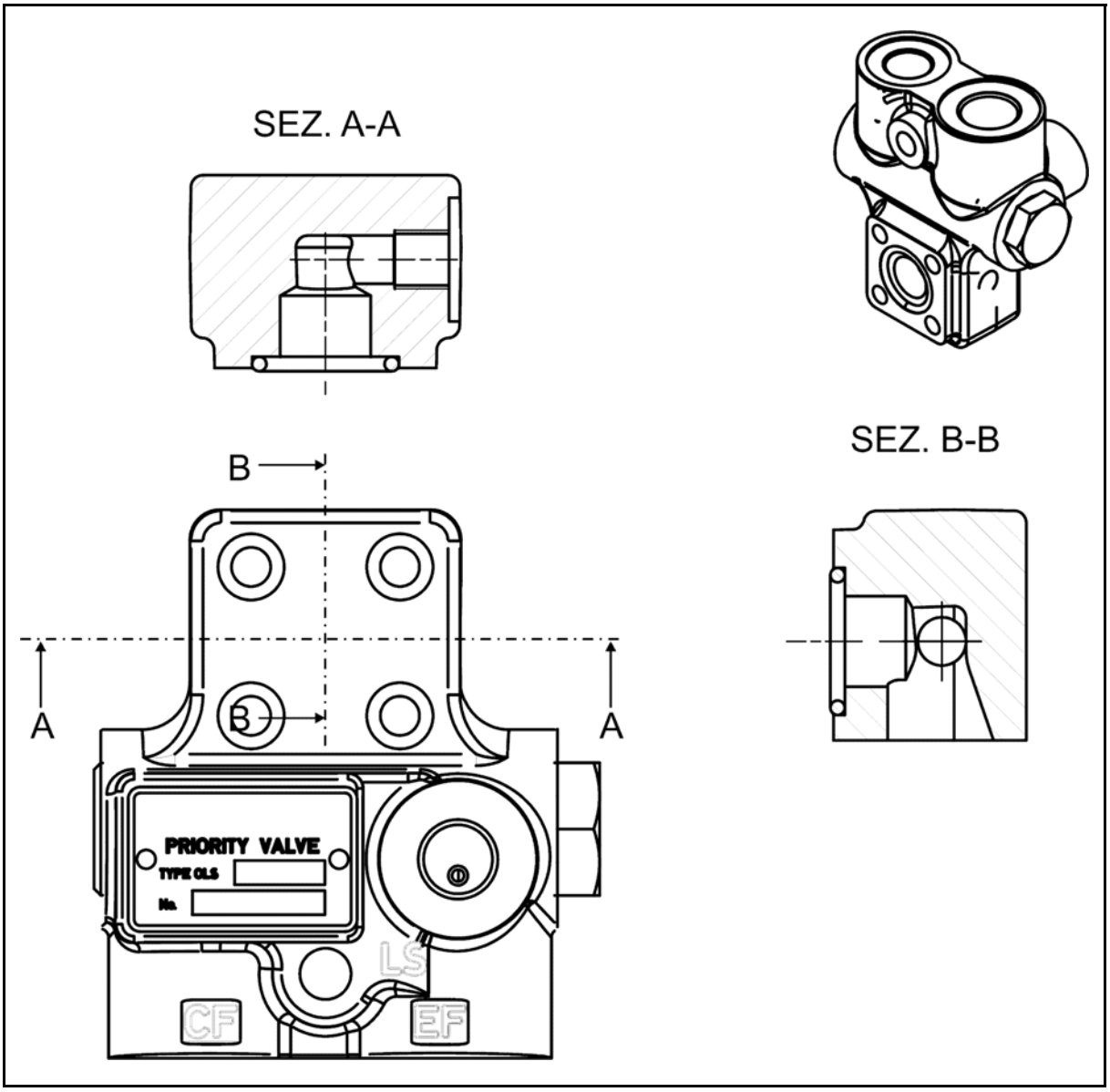

REMOVAL • INSTALLATION

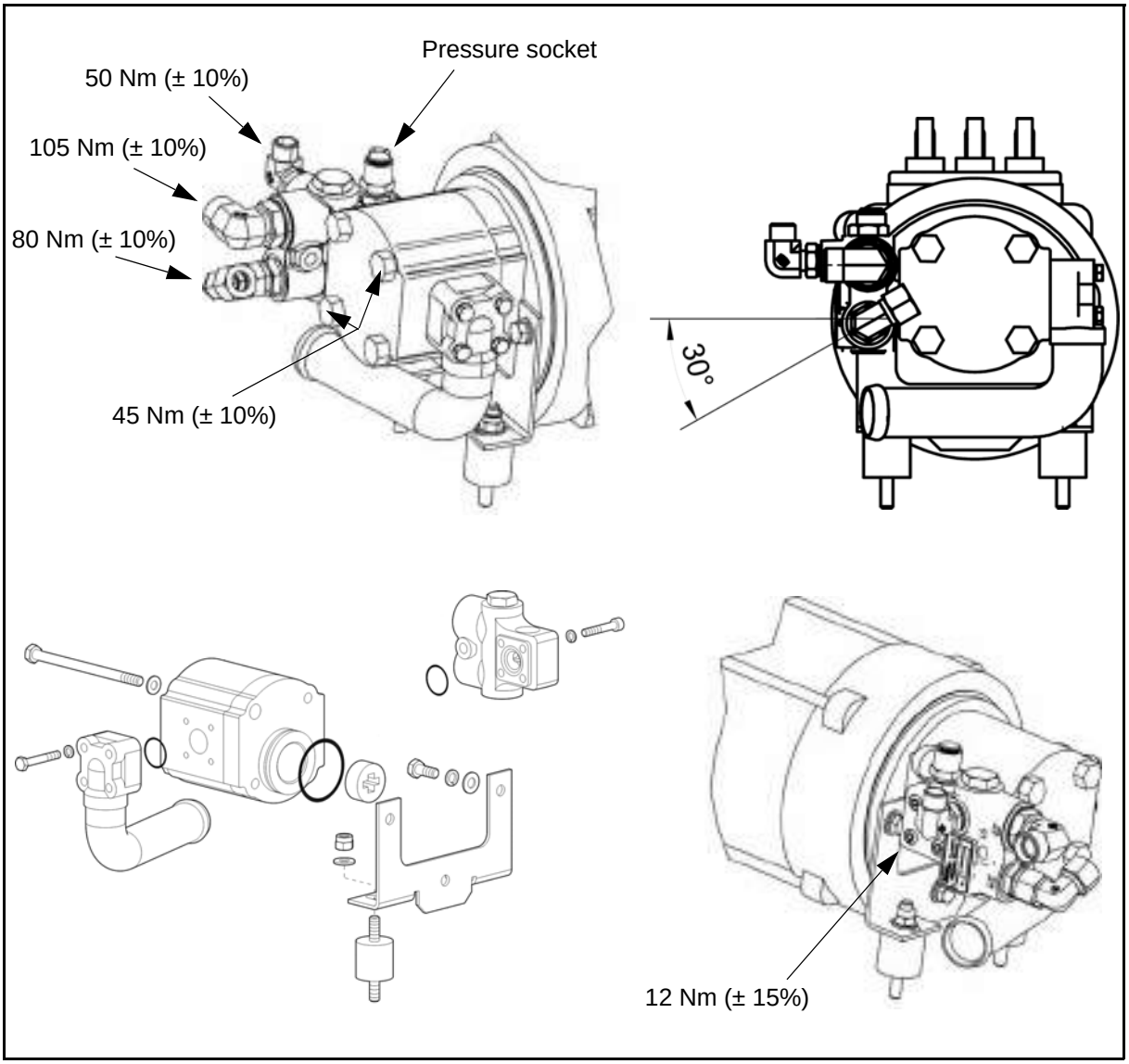

Removal procedure

1. Lower the forks to the ground
2. Disconnect the battery plug
3. Remove the footboard
4. Remove the hydraulic oil from the tank
5. Disconnect the hoses from the priority valve
6. Remove the priority valve.

Installation procedure

The reassembly procedure is the reverse of the disassembly procedure.

Remarks:
Replace the o-ring whenever you remove the priority valve

HYDRAULIC MOTOR

GENERAL

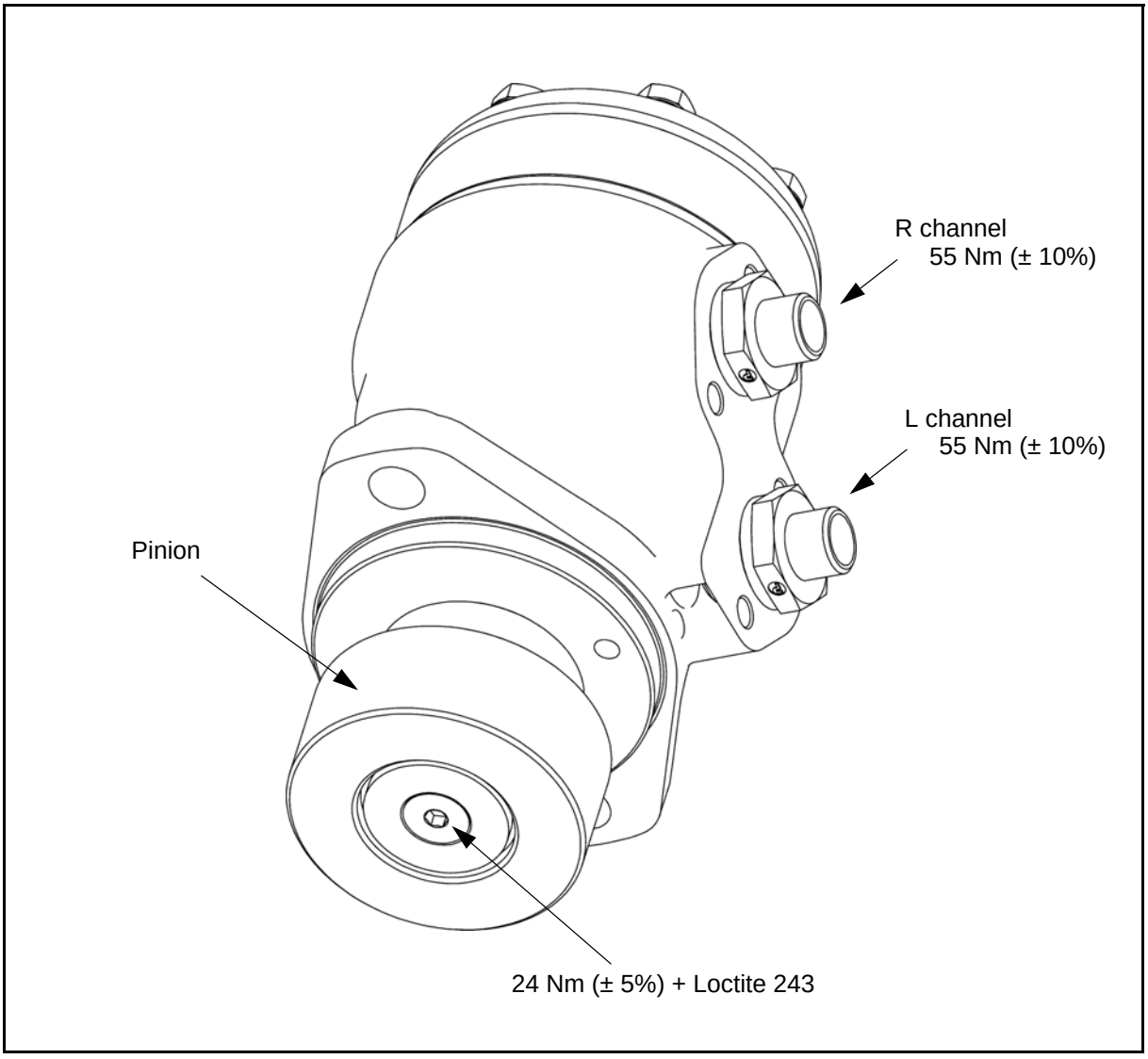

REMOVAL • INSTALLATION

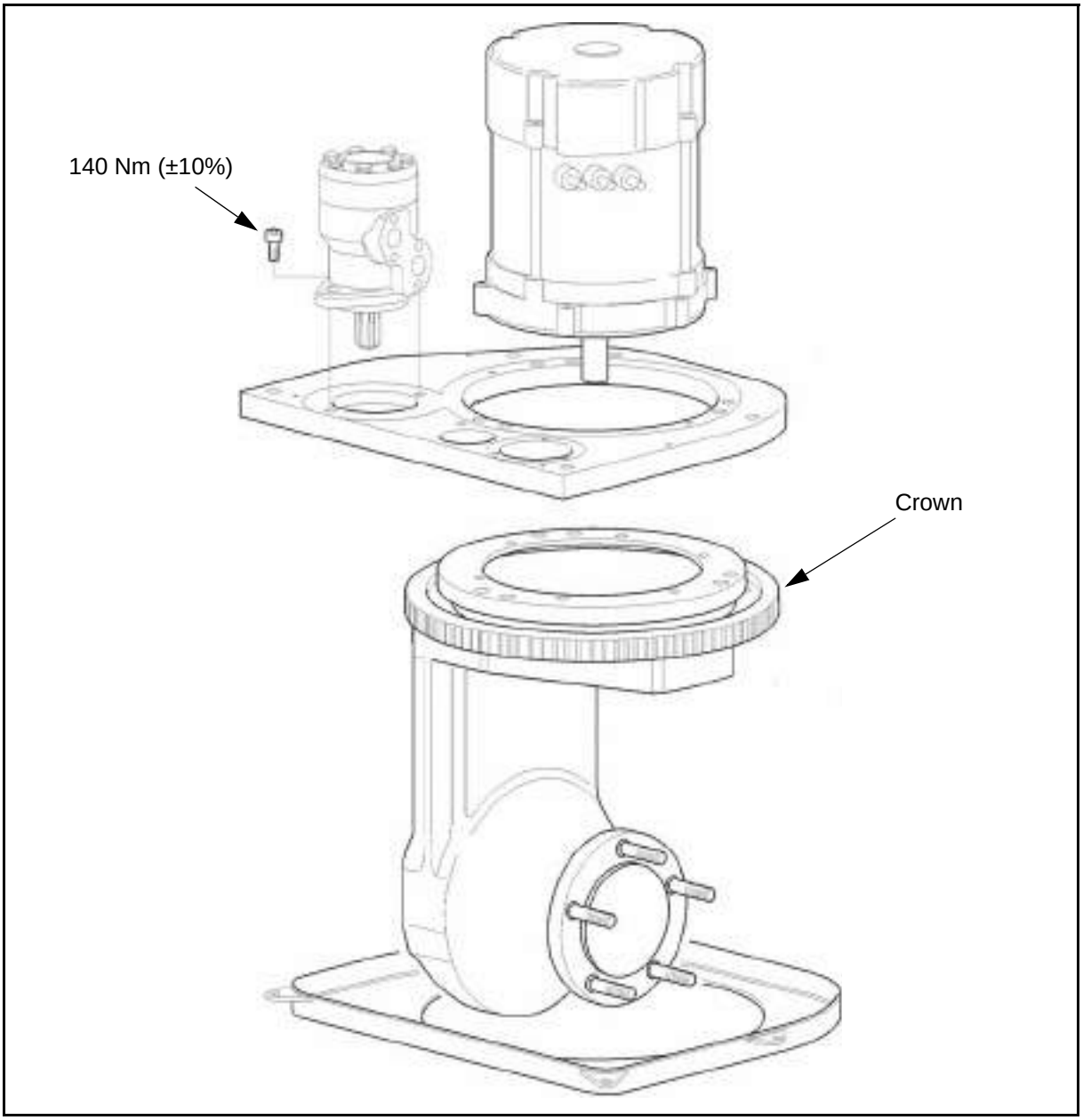

Removal procedure

1. Remove the battery cover
2. Disconnect the battery plug
3. Remove the rear cover
4. Remove the right side plate of the frame
5. Remove the battery
6. Disconnect the two hoses from the hydraulic motor
7. Remove the hydraulic motor

Installation procedure

The reassembly procedure is the reverse of the disassembly procedure.

Remarks:
Grease the steering axle crown before coupling the pinion to the hydraulic motor

STEERING POTENTIOMETER

GENERAL

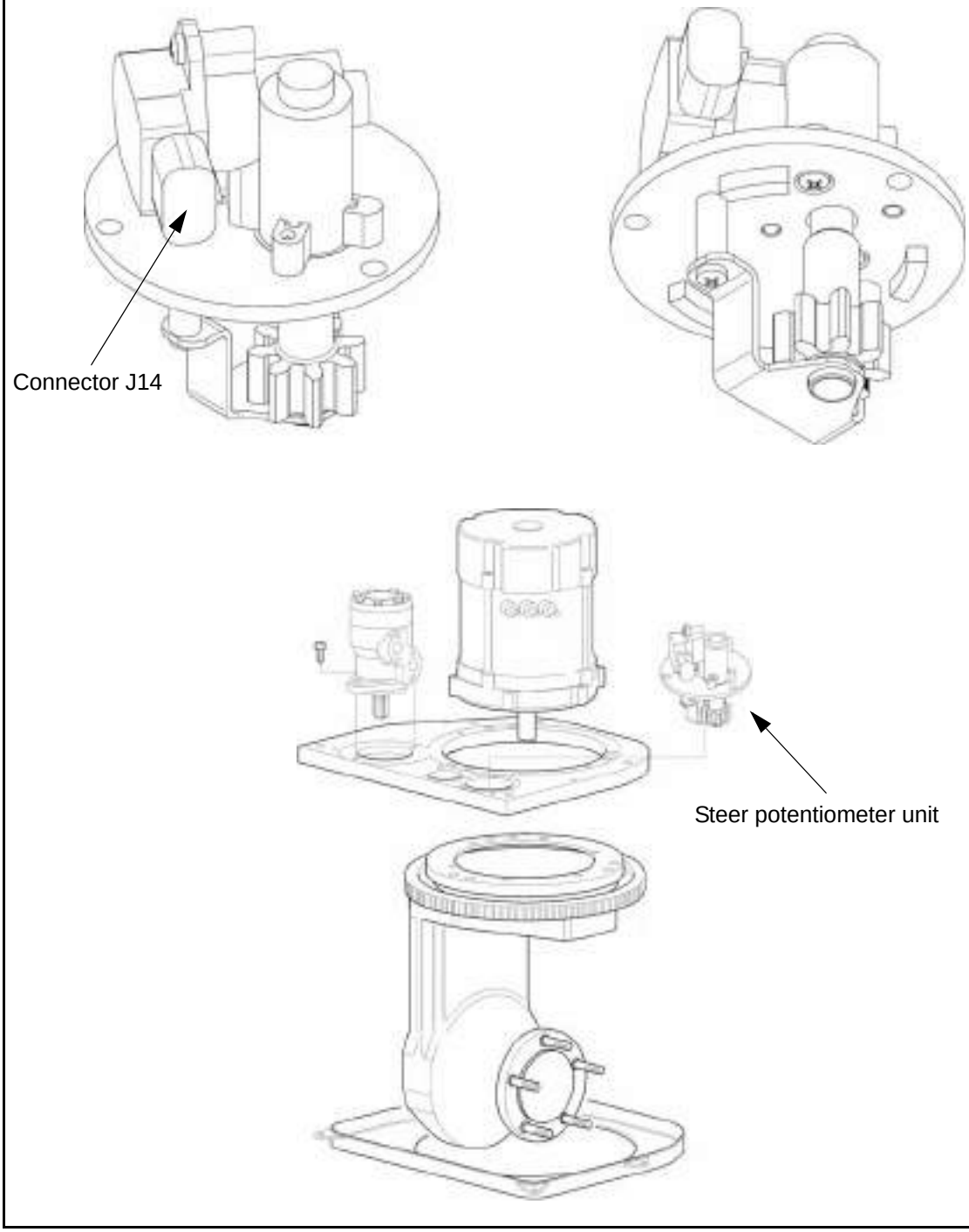

REMOVAL • INSTALLATION

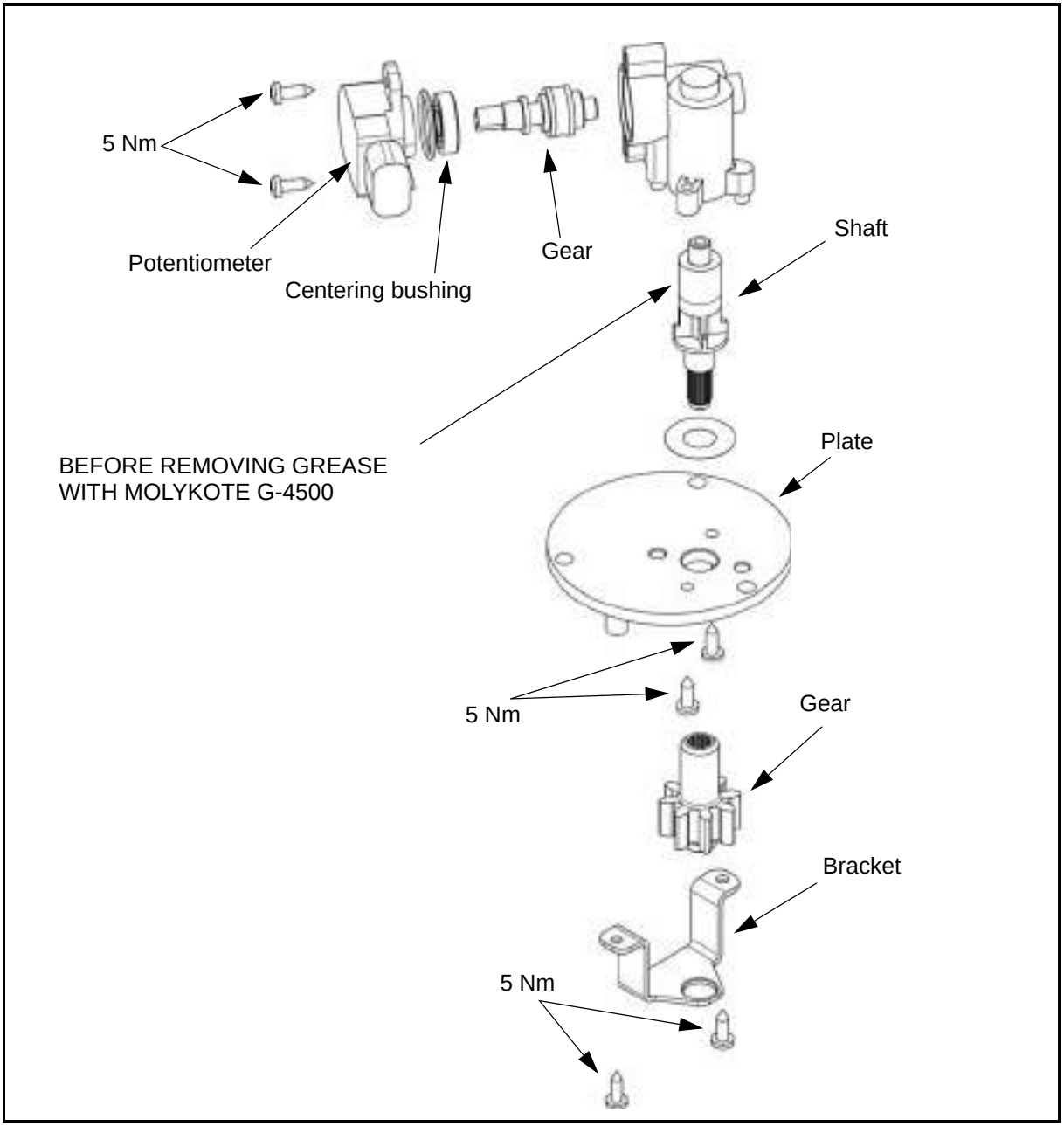

Removal procedure

1. Lift the battery cover
2. Disconnect the battery connector
3. Remove the rear cover
4. Remove the remote control switches - battery plug unit
5. Remove the steer potentiometer unit
6. Remove the two fixing screws and remove the potentiometer from the unit

Installation procedure

1. Check that the traction wheel is perfectly straight
2. Assemble the potentiometer on the unit
3. Assemble to potentiometer unit on the plate of the rear axle, making sure that the potentiometer is positioned in the middle value **(Potentiometer 15 rpm)**
4. Repeat the steering potentiometer acquisitions

TROUBLESHOOTING

Only hydraulic related items are listed.

Symptom	Possible cause	Action
the steering wheel cannot be rotated	• damaged lines	replace
	• The shaft from the steering wheel to the power steering is incorrectly installed or damaged	inspect and adjust or replace
the steering wheel is heavy	• Tyre pressure is low	Adjust the tyre pressure
	• the oil pressure does not rise	Inspect and adjust the pressure relief valve
	• the high and low pressure lines are connected in reverse	inspect and adjust
the oil pressure does not rise	• the high and low pressure lines are connected in reverse	inspect and adjust
	• Pressure relief valve faulty or not closed	inspect and correct
	• oil pump function defective	inspect and adjust or replace
	• priority solenoid valve broken	overhaul or replace
	• hydraulic fluid level low	top up
steering wheel does not return to centre properly	• Tyre pressure is low	Adjust the tyre pressure
	• the orbitrol shuttle does not move easily	inspect and adjust or replace the orbitrol
	• the rear axle does not move smoothly	add lubricant or adjust
The steering wheel pulls to one side when released	• the orbitrol shuttle does not move easily	inspect and adjust or replace the orbitrol
	• The steering valve drive shaft is damaged	replace the orbitrol
	• lines blocked (crushed or clogged)	Inspect and correct or replace
play is excessive and the vehicle wobbles	• oil moving in the orbitrol	replace the orbitrol
	• the orbitrol shuttle does not move easily	inspect and adjust or replace the orbitrol
	• air aspirated from the lines	inspect and adjust or replace
	• the steering shaft is defective	inspect and adjust

Symptom	Possible cause	Action
the steering wheel shimmies	• the shaft is not installed correctly	inspect and adjust
	• The hydraulic motor is not working correctly	inspect and adjust
	• The theets of the hydraulic motor or of the crown are damaged	inspect and adjust
the wheels steer contrary to the steering direction	• the lines to the hydraulic motor are connected in reverse	inspect and correct the line connections
abnormal noise	• The pressure relief valve is defective	check and adjust the pressure
	• air aspirated from the lines	inspect and adjust or replace
	• lines blocked (crushed or clogged)	unblock or replace
	• The theets of the hydraulic motor or of the crown are damaged	inspect and adjust

BRAKE

Page

BRAKE SYSTEM 8-2
GENERAL 8-2
SPECIFICATIONS 8-2
PARKING BRAKE 8-3
BRAKE GROUP 8-4
BRAKE SHOES AND BRAKE CYLINDER 8-6
BRAKE PEDAL 8-8
BRAKE FLUID TANK 8-10
WHEELS / TYRES 8-10

BRAKE SYSTEM

GENERAL

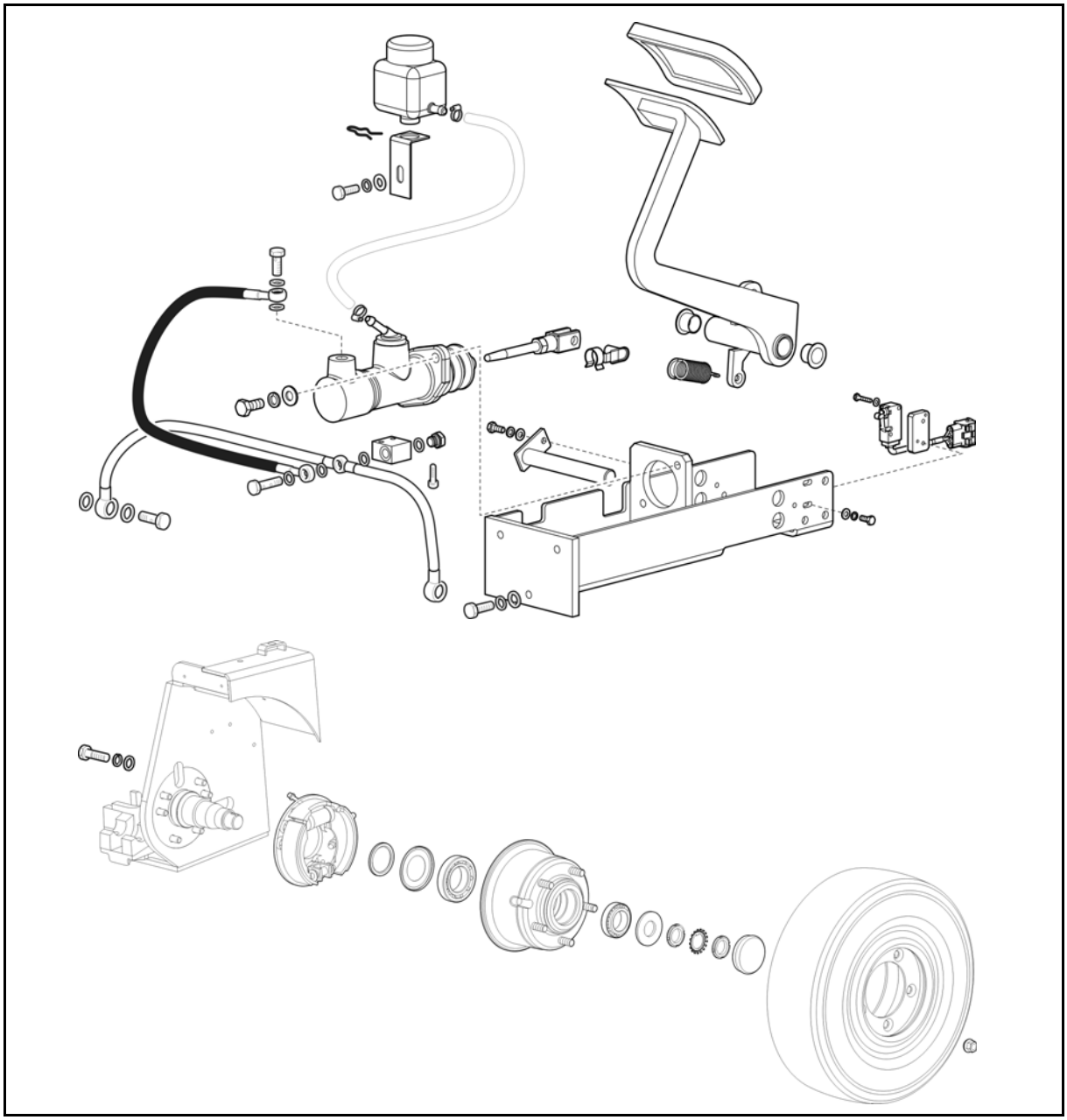

SPECIFICATIONS

Item			Model All models
Service brake			Mechanical drum brake
Parking brake			Mechanical drum brake
Brake wheel	Diameter	mm	170
	Thickness	mm	40
Brake shoe	Area	mm^2	6073 (for shoe)
	Thickness	mm	5

PARKING BRAKE

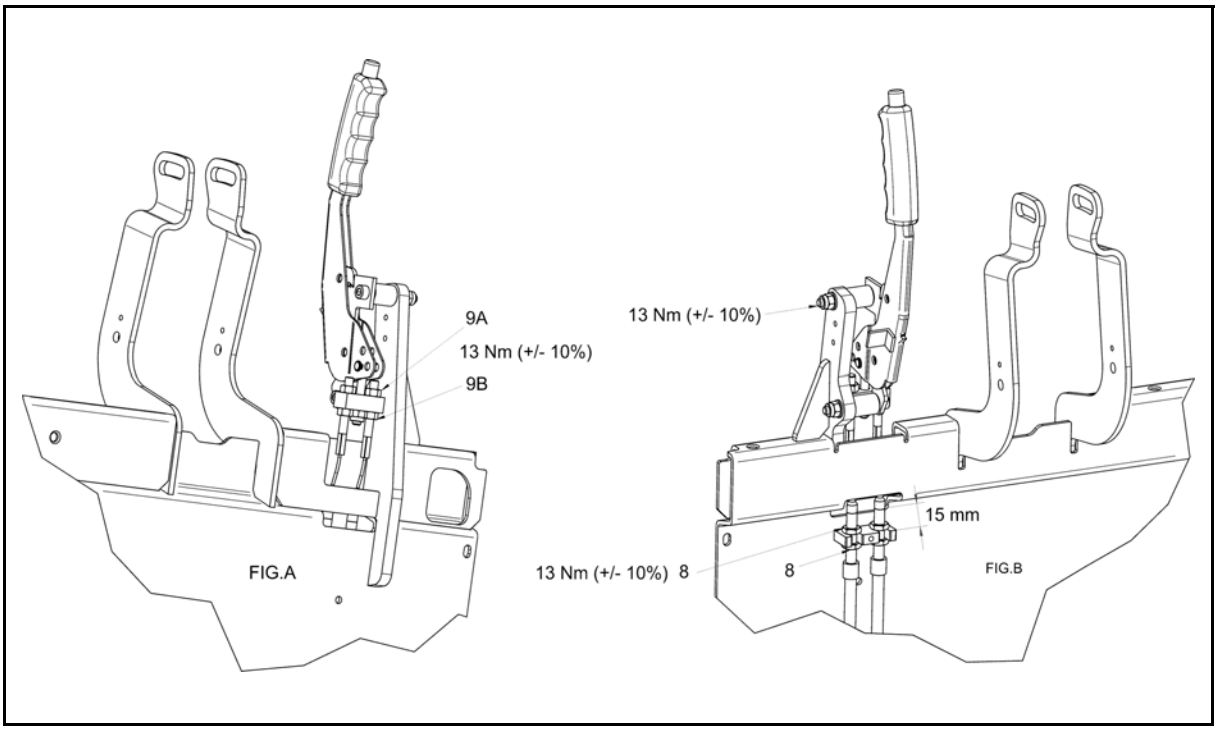

DISASSEMBLY • REASSEMBLY

Disassembly Procedure

1. Disconnect the battery plug
2. Remove the plastic cover
3. Disconnect the cables of the parking brake
4. Remove the 3 fixing screws
5. Remove the lever of the parking brake

Reassembly Procedure

The reassembly procedure is the reverse of the disassembly procedure.

INSPECTION • ADJUSTMENT

Procedure

1. Place the bush into the appropriate bearing at suggested measure (fig.b)
2. Tight the nut and the counternut (pos.8)
3. After inserting the cable into the block (fig.a) tighten it by hand to nullify in vain stroke of lever into the brake
4. Adjusting the nut (pos.9) verify with the hand that the turnings of the wheels are:
   (a) Notch 4: possible but hard
   (b) Notch 5: completely blocked

Note: Verify the same behavior in both wheels

5. Tight the counternut (pos.9)
6. Pull the lever some times and verify that the conditions of point 4a and 4b are mainteined

BRAKE GROUP

DISASSEMBLY • REASSEMBLY

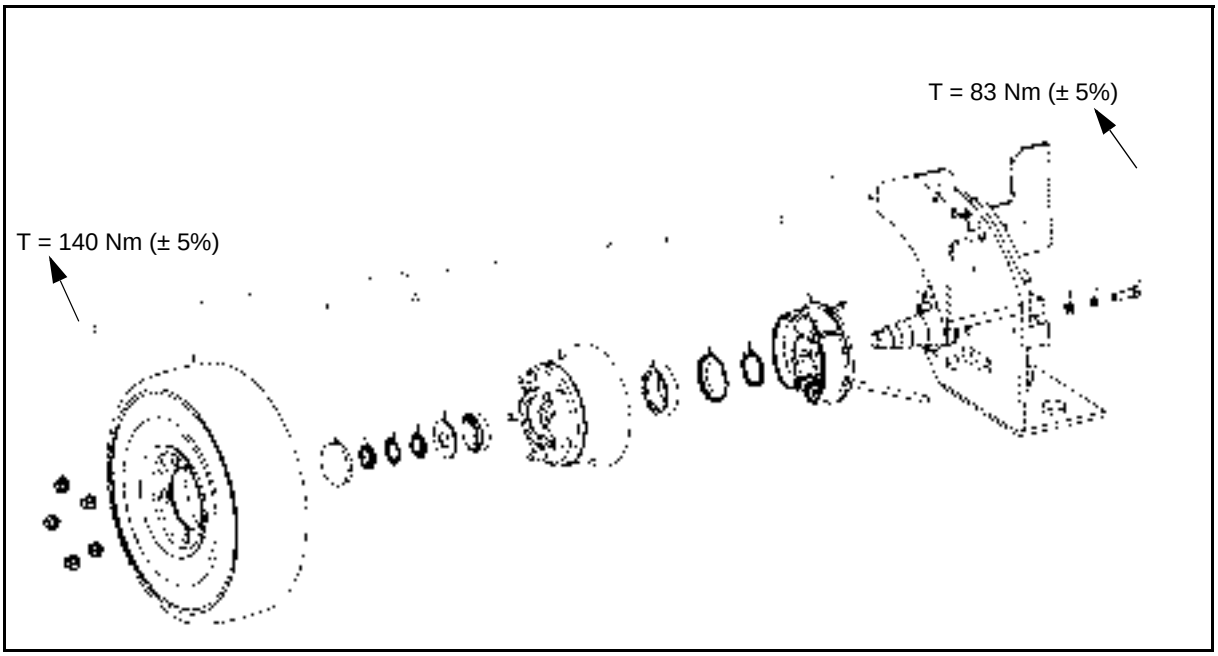

Disassembly Procedure

1. Disconnect the battery plug
2. Jack up the vehicle and remove the front wheels (item 14,3)
3. Remove the hub wheel cover (item 10) **[Point 1]**
4. Remove the 2 bushings and the safety washer (item 16B, 17, 16A) **[Point 2]**
5. Remove the large washer (item 15)
6. Remove the small conical bearing (item 7)
7. Remove the drum (item 2)
8. Remove the large conical bearing (item 6) **[Point 3]**
9. Remove the Nilos-ring (item 9) **[Point 4]**
10. Remove the spacer (item 8)
11. Remove the hand brake cable
12. Drain out the brake oil
13. Disconnect the hose from the brake cylinder
14. Remove the 6 bolts and washers of the brake plate from the internal side of the frame (item 11, 12, 13)
15. Remove the brake group (item 4)

Reassembly Procedure

The reassembly procedure is the reverse of the disassembly procedure.

Point Operations

[Point 1]

Disassembly:

Remove the hub wheel, pay attention not to damage it

Reassembly:

After installation, put 1/3 of appropriate grease inside the cover (around 30gr.) well distributed

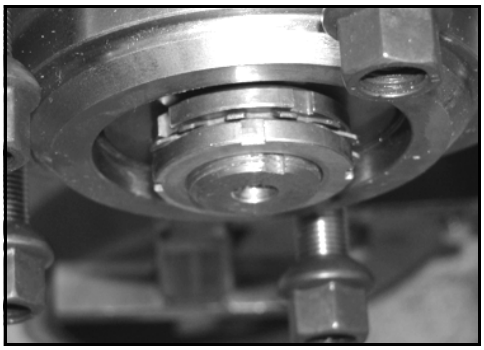

[Point 2]

Disassembly:

Before removing the bearing nut (item 16B) it is necessary to bend the teeth of the safety washer (item 17). Then remove also the bushing (item 16A)

Reassembly:

It is necessary to fit the 2 bearing nuts with the conical surface orientated towards the frame (this is because less friction is required between these parts and avoid any damaging cause by the turning of the bearing-wheel). After installation, tight the bearing nut (item 16A) with a torque of **60 Nm**, then turn the wheel hub 2-3 turns in both directions sides in order to adjust the bearings.

Then loose the bearing nut and tight it again with a torque of **20 Nm** (with this operation **0,6-1 Nm** of turning torque is obtained)

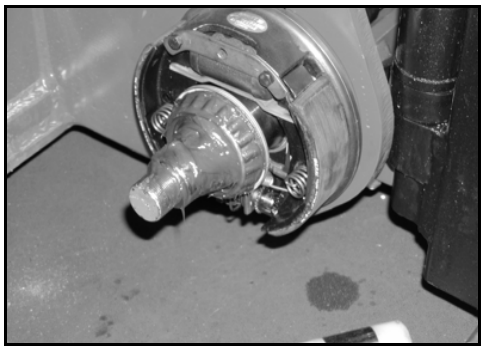

[Point 3]

Disassembly:

Remove the large conical bearing (item 6)

Reassembly:

After installation, put the appropriate grease with the correct quantity the bearings. On the big conical bearing 6 cover it of grease but do net exceed over the diameter of the Nilos-ring (item 9) located on its rear side

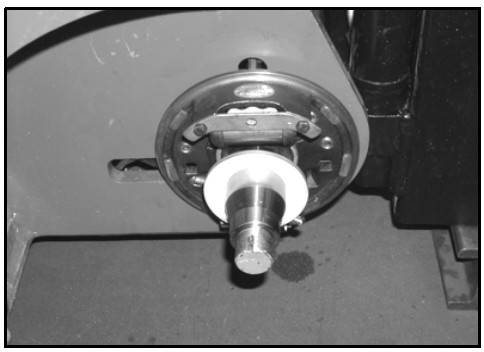

[Point 4]

Disassembly:

Remove the Nilos-ring (item 9) (this is used to seal the bearings)

Reassembly:

For the installation it is necessary to replace this part

BRAKE SHOES AND BRAKE CYLINDER

DISASSEMBLY • REASSEMBLY

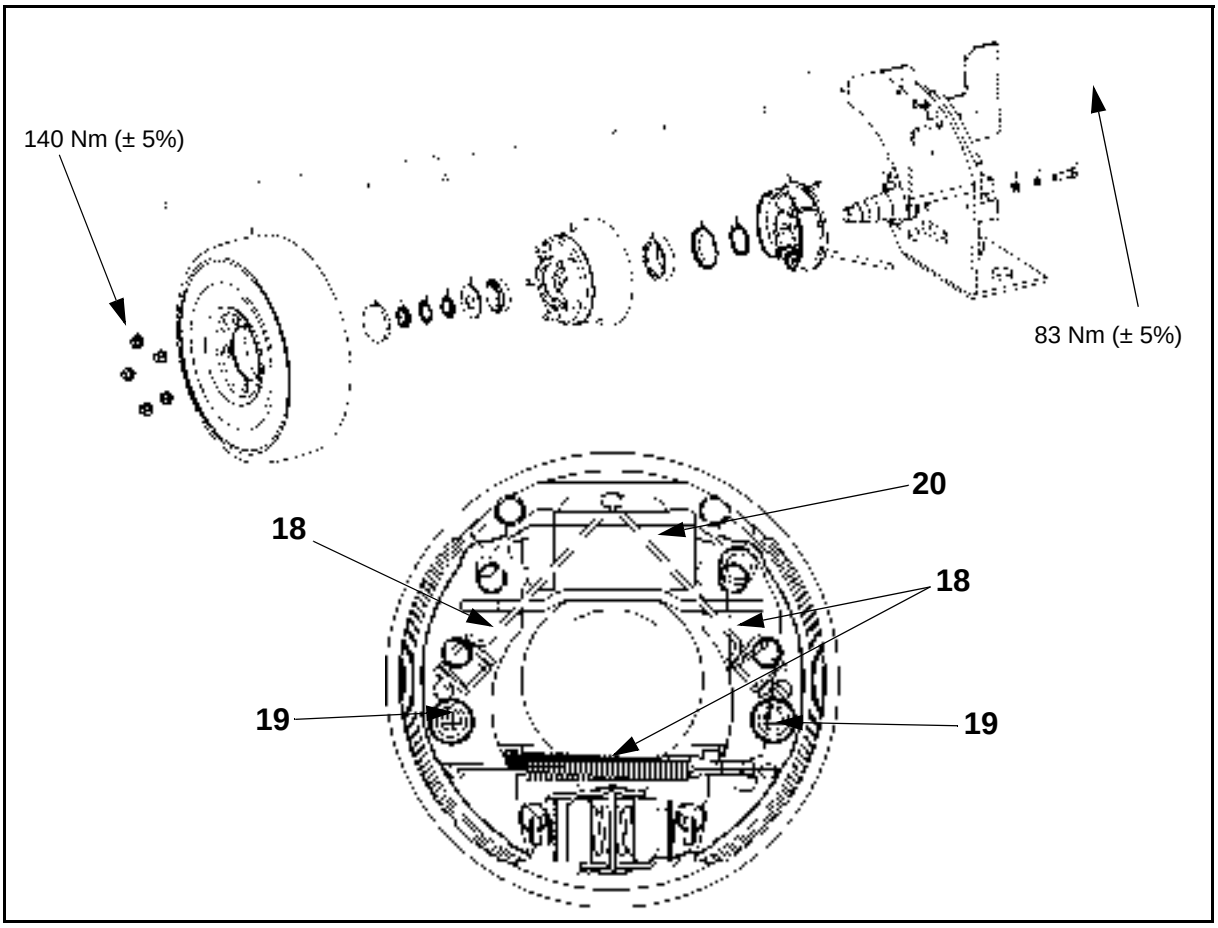

Disassembly Procedure

1. Disconnect the battery plug
2. Jack up the vehicle and remove the front wheels (item 14,3)
3. Remove the hub wheel cover (item 10)
4. Remove the 2 bearing nuts and the safety washer (item 16B, 17, 16A)
5. Remove the big washer (item 15)
6. Remove the small conical bearing (item 7)
7. Remove the drum (item 2) **[Point 1]**
8. Remove the large conical bearing (item 6)
9. Remove the Nilos (item 9)
10. Remove the spacer (item 8)
11. Remove the shoe return springs (item 18)
12. Remove the shoe springs adjuster (item 19)
13. Remove the hand brake cable
14. Remove the brake shoes **[Point 2]**
15. Drain out the brake oil
16. Remove the 6 bolts and washers of the brake plate from the internal side of the frame (item 11, 12, 13)
17. Remove the brake pipe **[Point 3]**
18. Remove the brake group (item 4)
19. Remove the brake cylinder (item 20)

Reassembly Procedure

The reassembly procedure is the reverse of the disassembly procedure.

Point Operations

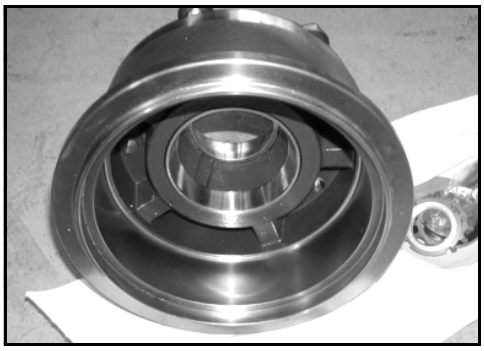

[Point 1]
Inspection:
Measure the internal diameter of the brake drum.
Standard inside diameter: 170 mm

[Point 2]
Inspection:
Measure the brake material thickness of the brake shoes.
Standard thickness: 5 mm
Limit free thickness: 1 mm

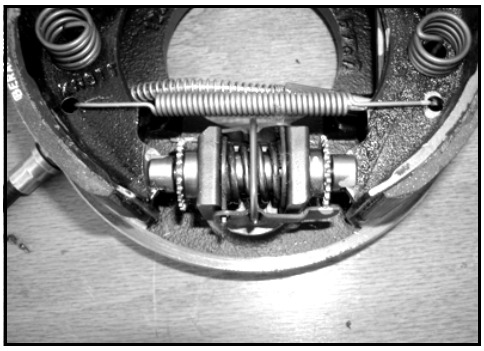

Reassembly:
After installation, it is necessary to put the self adjusting cylinder in the standard position by turning the two bushings. Set the shoes diameter to approximatly 169 mm

[Point 3]
Disassembly:
Remove the brake pipe as shown in the drawing

Reassembly:
After installation, tightening torque of the brake bolt = **18 Nm**

BRAKE PEDAL

DISASSEMBLY • REASSEMBLY

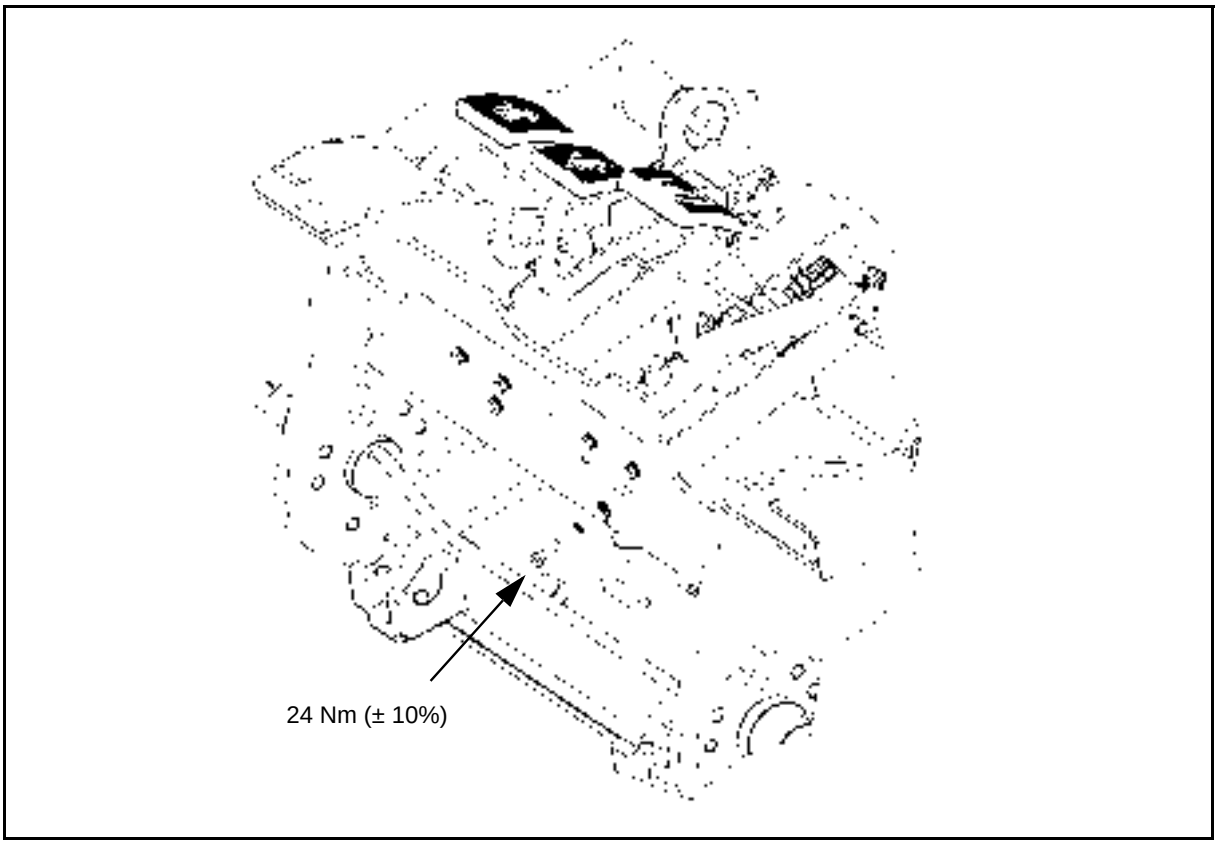

Disassembly Procedure

1. Disconnect the battery plug
2. Disconnect the wiring of the pedal
3. Drain out the brake oil
4. Disconnect the brake hose from the brake master cylinder **[Point 1]**
5. Remove the 3 screws from the front of the frame
6. Remove the brake pedal

Reassembly Procedure

The reassembly procedure is the reverse of the disassembly procedure.

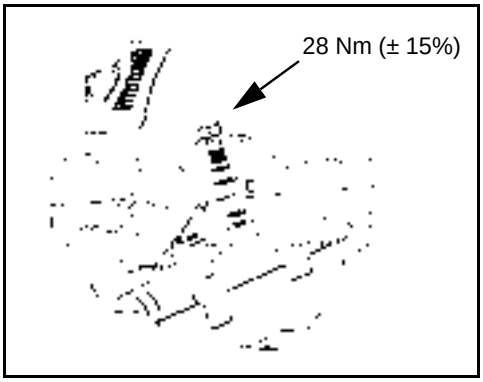

Point Operations

[Point 1]

Reassembly:

After installation, tightening torque of the bolt on the master brake cylinder = **28 Nm**

INSPECTION • ADJUSTMENT

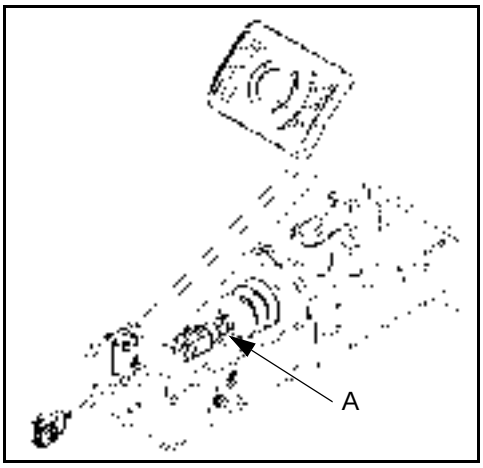

Brake pump play adjustment

- Move the nut A to have a play of 0,2 - 0,5 mm

Brake fluid system bleeding

- Loosen the cap and press the brake pedal and let go out the air
- Repeat the procedure untill the air doesn't go out
- Tight the cap
- Repeat the procedure on the other reduction gear

BRAKE FLUID TANK

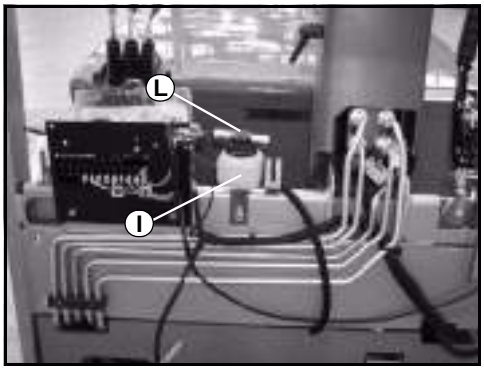

When the fluid in the brake tank **(I)** reaches a too low level, the warning light indicating the low level liquid brakes on the dashboard shall light up.
Use the button **(L)** to verify the correct warning light functioning.

WHEELS / TYRES

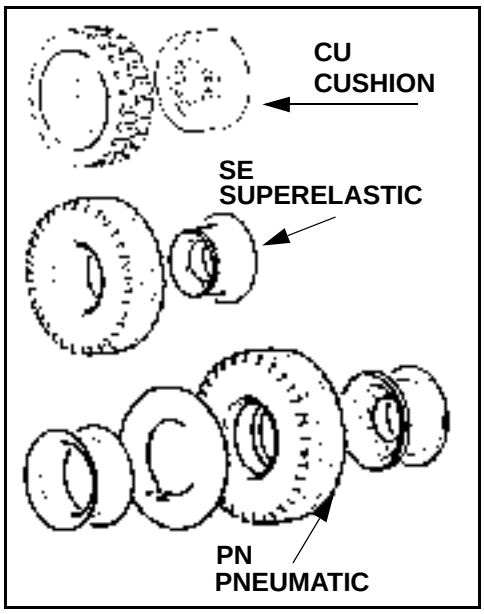

PRESSURE PN TYRES
- Front 10 bar
- Rear 10 bar

TIGHTENING TORQUES
Driving wheels 140 Nm
Steering wheels 140 Nm

WHEELS / TYRES TABLE

Vehicle model		Type	Tyre size	Notes
1,0 - 1,25 t	Front / Rear	Cushion (also non-marking)	457x152	optional
		Superelastic (also non-marking)	18x7-8	standard
		Pneumatic	18x7-8	optional
1,5 t	Front / Rear	Cushion (also non-marking)	457x178	optional
		Superelastic (also non-marking)	18x7-8	standard
		Pneumatic	18x7-8	optional

BODY & FRAME

Page

BODY AND FRAME 9-2

GENERAL 9-2

BATTERY COVER 9-3

OVERHEAD GUARD 9-4

COUNTERWEIGHT 9-5

OPERATOR'S SEAT 9-6

BODY AND FRAME

GENERAL

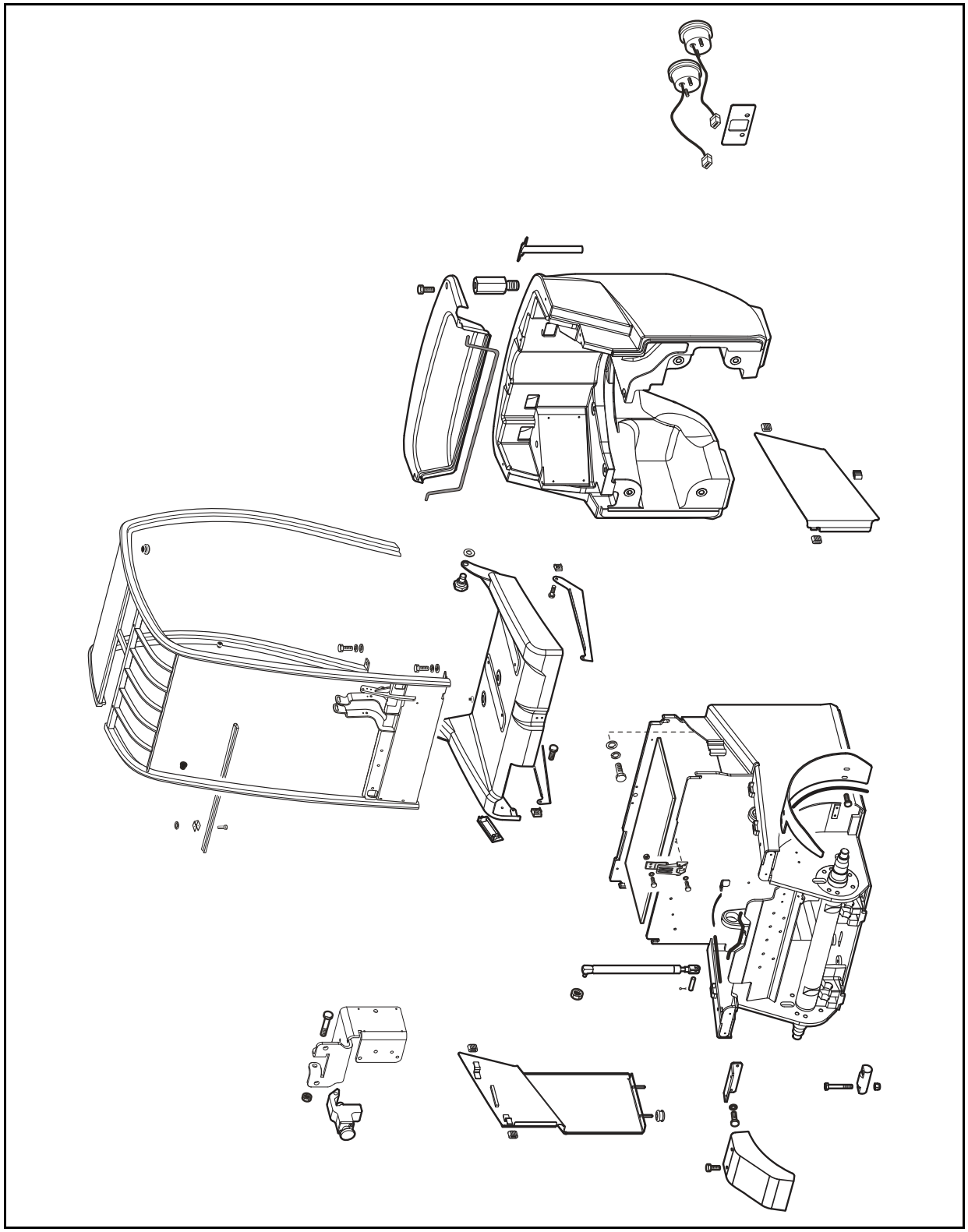

BATTERY COVER

DISASSEMBLY • REASSEMBLY

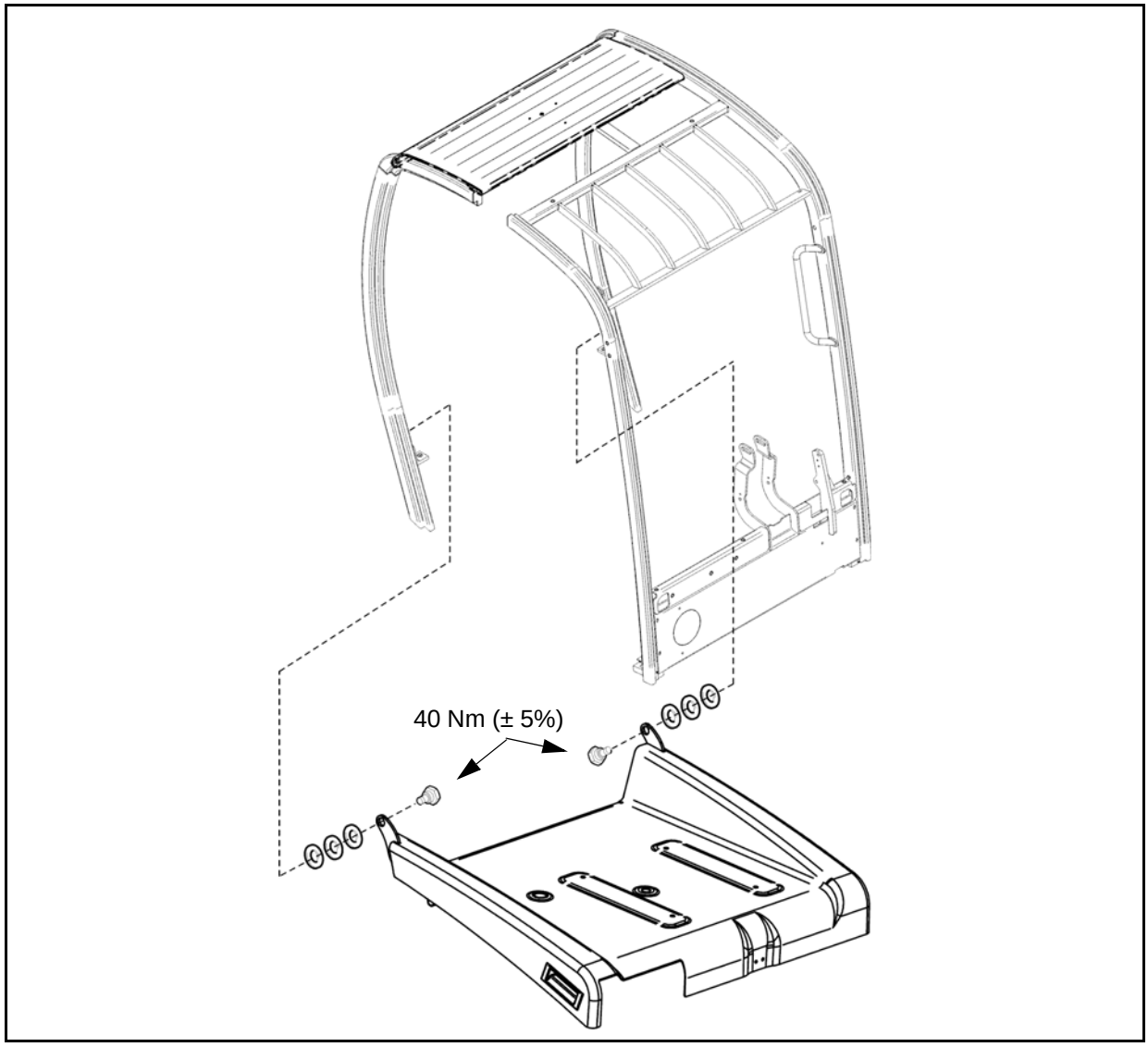

Disassembly Procedure

1. Open the battery cover
2. Disconnect the battery plug
3. Fix the battery cover with a rope between the operator's seat and a mast of the overhead guard
4. Disconnect the wiring of the seat microswitch
5. Remove the gas spring supporting the battery cover (only frame side)
6. Close the battery cover
7. Remove the battery cover hinge set bolts
8. Remove the battery cover W/ seat

Reassembly Procedure

The reassembly procedure is the reverse of the disassembly procedure.

OVERHEAD GUARD

DISASSEMBLY • REASSEMBLY

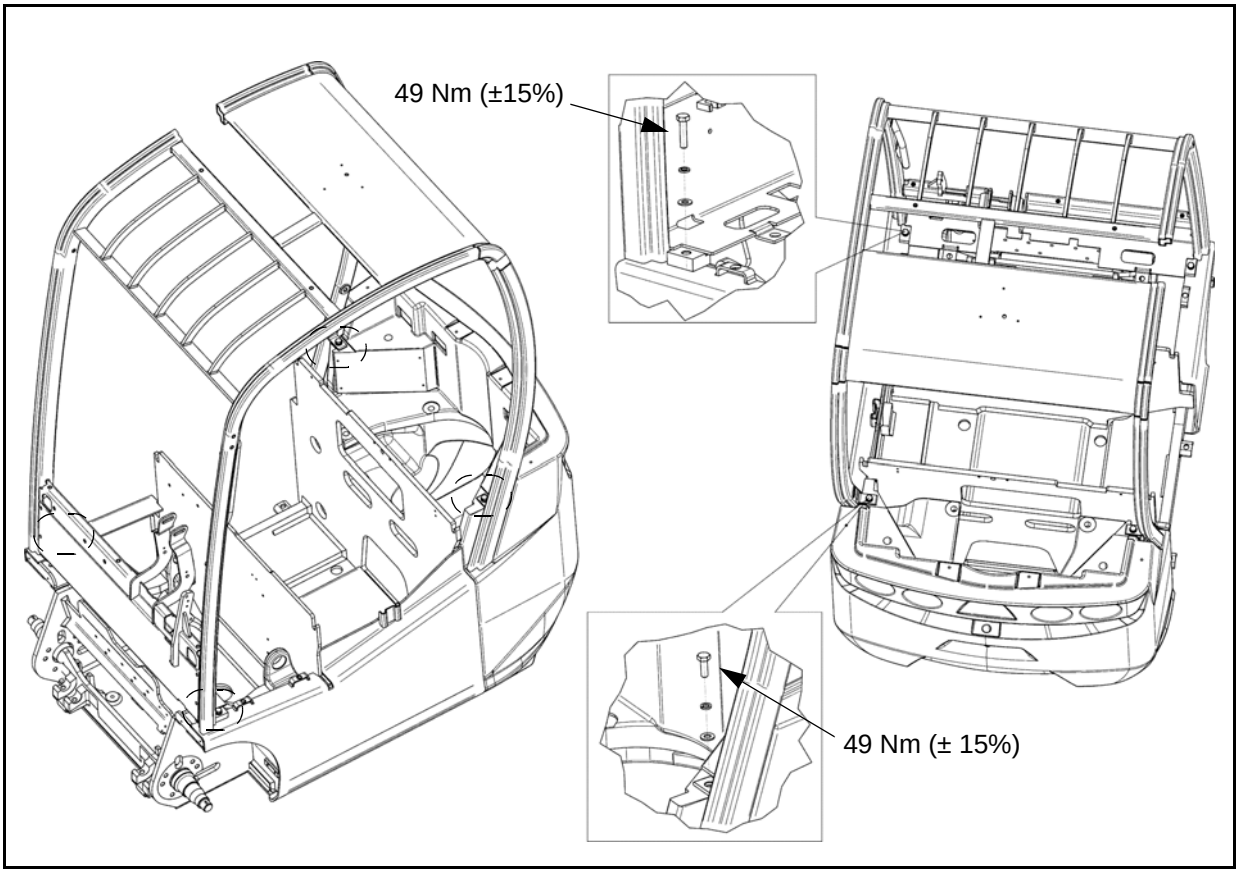

Disassembly Procedure

1. Open the battery cover
2. Disconnect the battery plug
3. Remove the battery cover
4. Disconnect light wires on the overhead guard, if present
5. Secure the overhead guard using belts and a bridge crane
6. Remove the overhead guard

Reassembly Procedure

The reassembly procedure is the reverse of the disassembly procedure.

Tightening torque of the 4 bolts of the overhead guard = **49 Nm**

COUNTERWEIGHT

DISASSEMBLY • REASSEMBLY

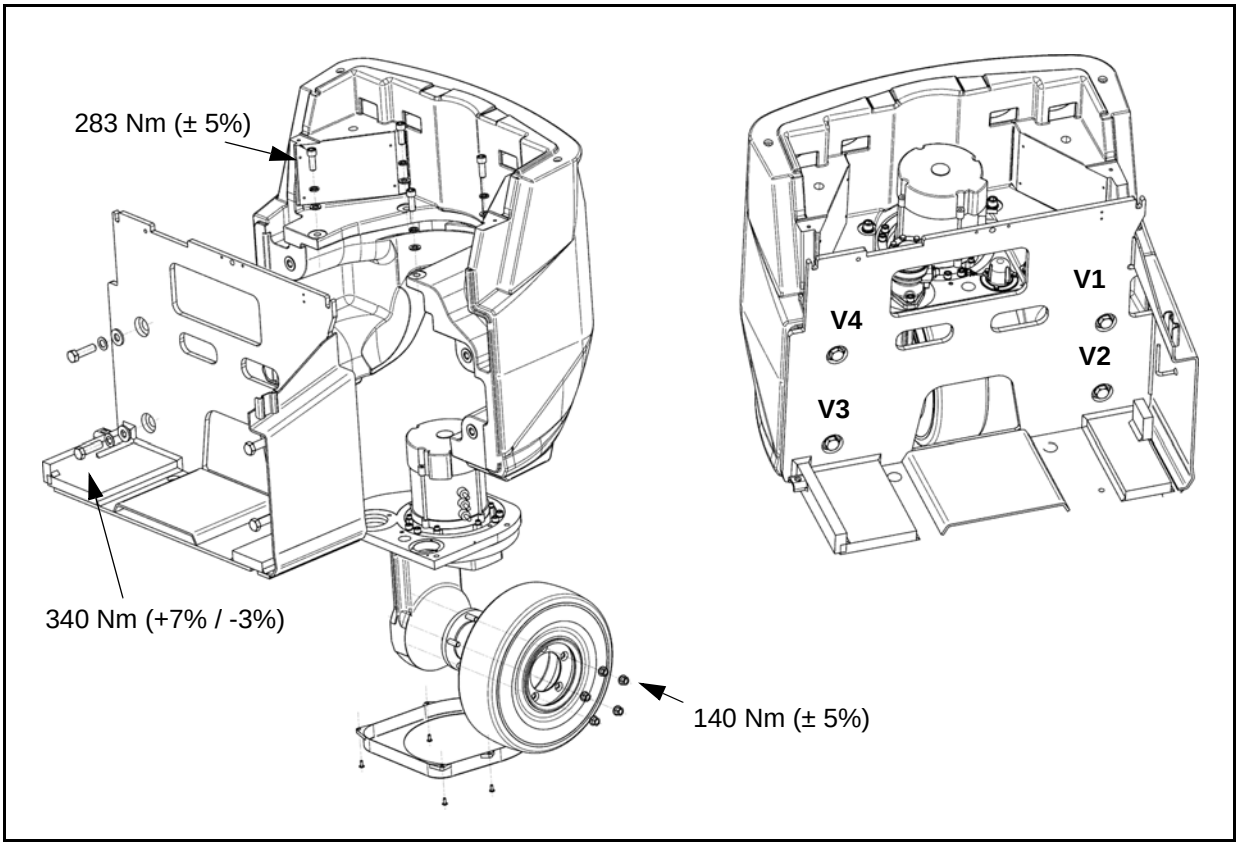

Disassembly Procedure

1. Place two wooden blocks under the frame of the fixed part of the mast
2. Disconnect the battery plug
3. Remove the rear cover and the battery cover
4. Remove the battery
5. Disconnect the alimentation cable between the contactor group and the two logic unit
6. Disconnect the hydraulic hoses from the pump motor
7. Set the hoisting attachment and remove the counterweight set bolt
8. Remove the counterweight

Reassembly Procedure

The reassembly procedure is the reverse of the disassembly procedure.

Check that bolts are in the following sequence: V_1, V_2, V_3, V_4 ; after that tighten them the bolts to = 340 Nm

OPERATOR'S SEAT

DISASSEMBLY • REASSEMBLY

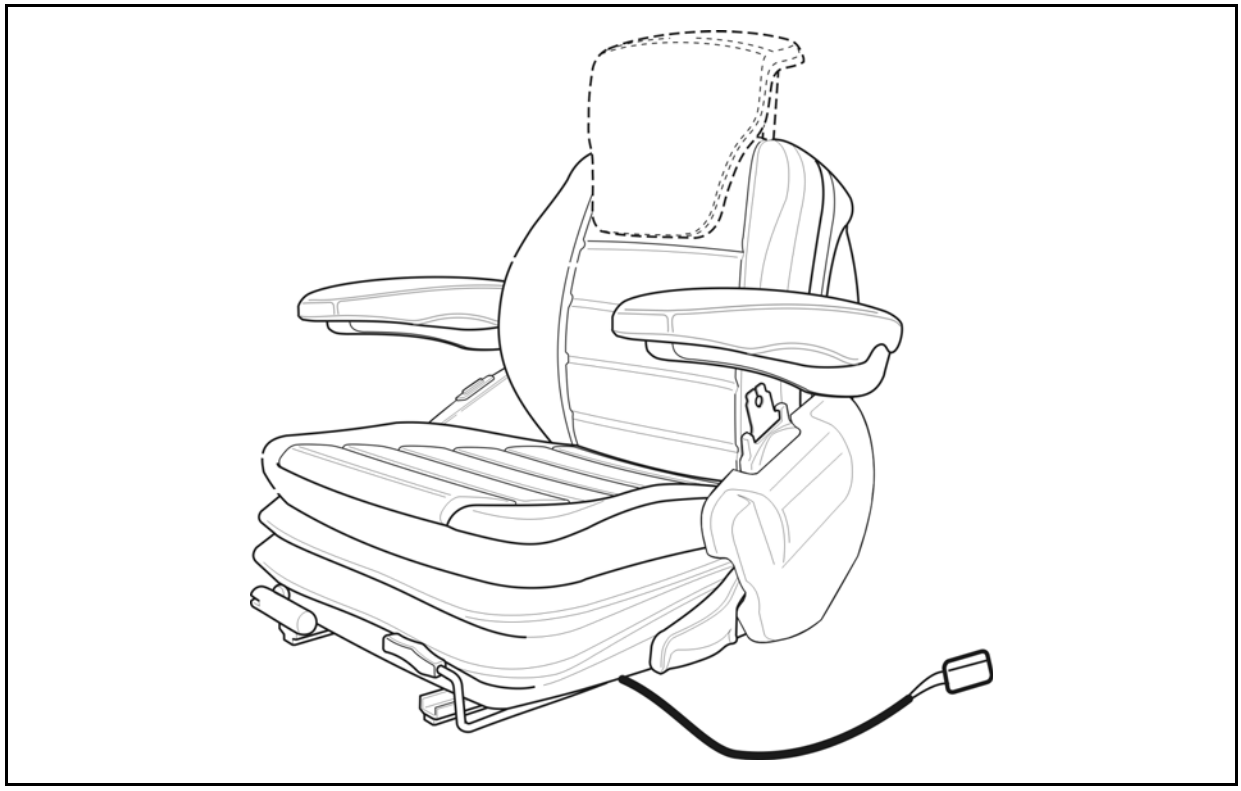

Disassembly Procedure

1. Open the battery cover
2. Disconnect the wiring of the seat switch
3. Remove the operator's seat set nuts (be careful not to drop the operator's seat)
4. Remove the operator's seat

Reassembly Procedure

The reassembly procedure is the reverse of the disassembly procedure.

MATERIAL HANDLING SYSTEM

Page

HYDRAULIC CIRCUIT (LEVER CONTROL VALVE) 10-2
HYDRAULIC CIRCUIT (ELECTRIC CONTROL VALVE) 10-3
COMPONENTS 10-4
STEERING SYSTEM 10-4
HYDRAULIC SYSTEM (WITH LEVER CONTROL VALVE) 10-4
HYDRAULIC SYSTEM (WITH ELECTRIC CONTROL VALVE) 10-5
MAST 2M T.V. 10-6
MAST 3M T.V. 10-6
MAST 2M F.F.L. 10-7
MAST 3M F.F.L. 10-7
HYDRAULIC OIL AND FILTER 10-8
OIL LEAK TEST 10-10
LIFTING CYLINDERS 10-10
TILTING CYLINDERS 10-10

HYDRAULIC CIRCUIT (LEVER CONTROL VALVE)

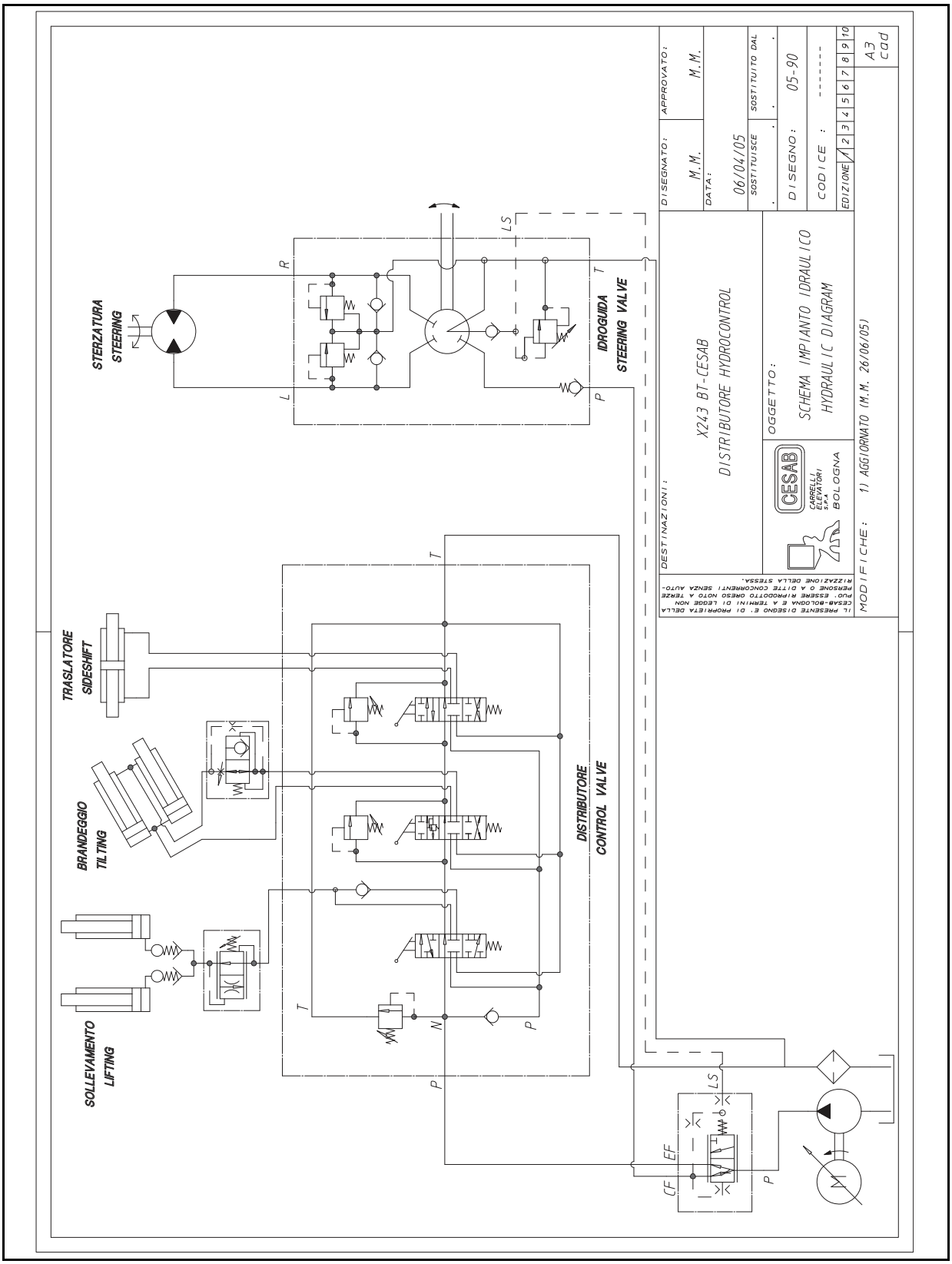

HYDRAULIC CIRCUIT (ELECTRIC CONTROL VALVE)

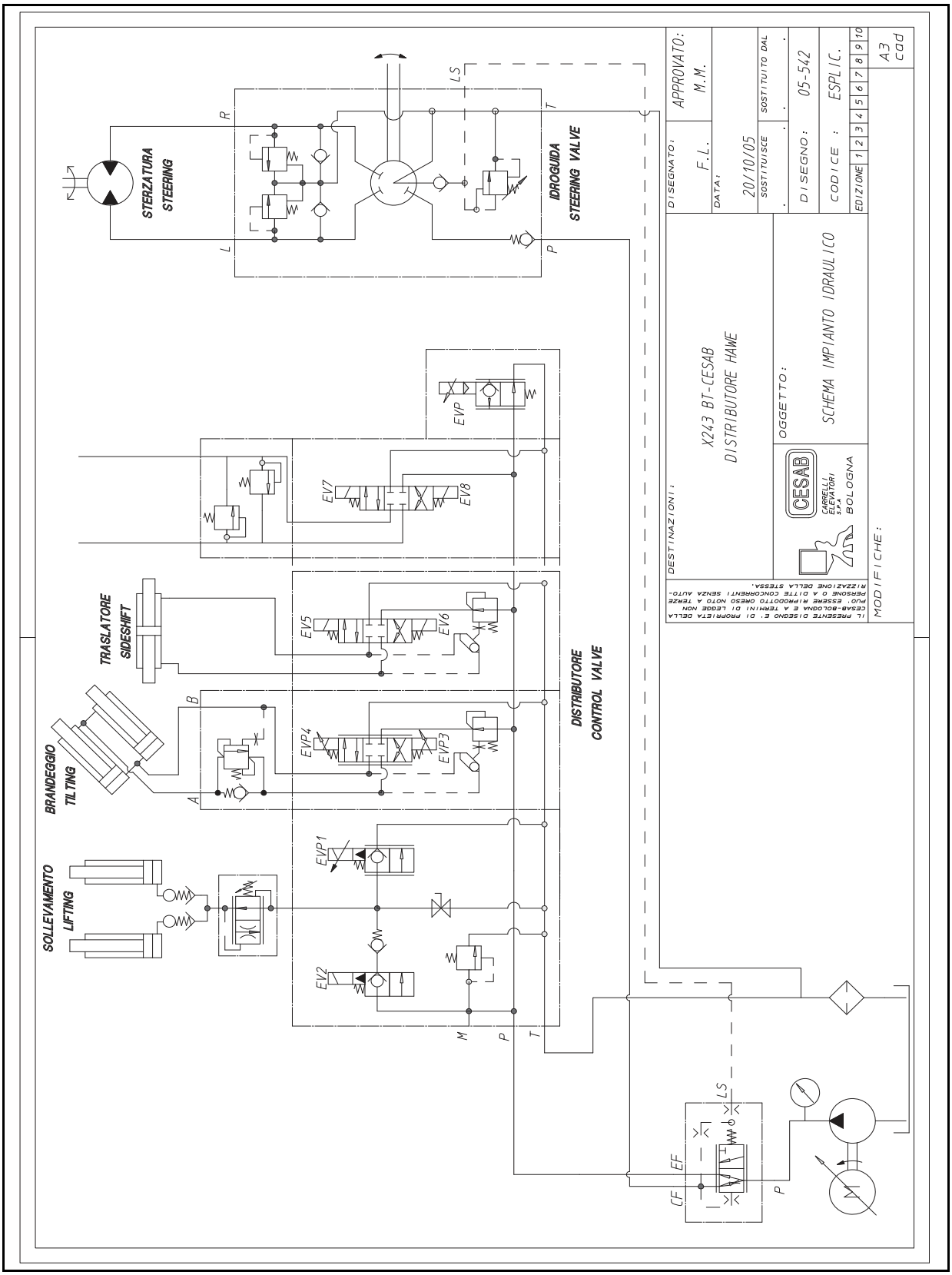

COMPONENTS

STEERING SYSTEM

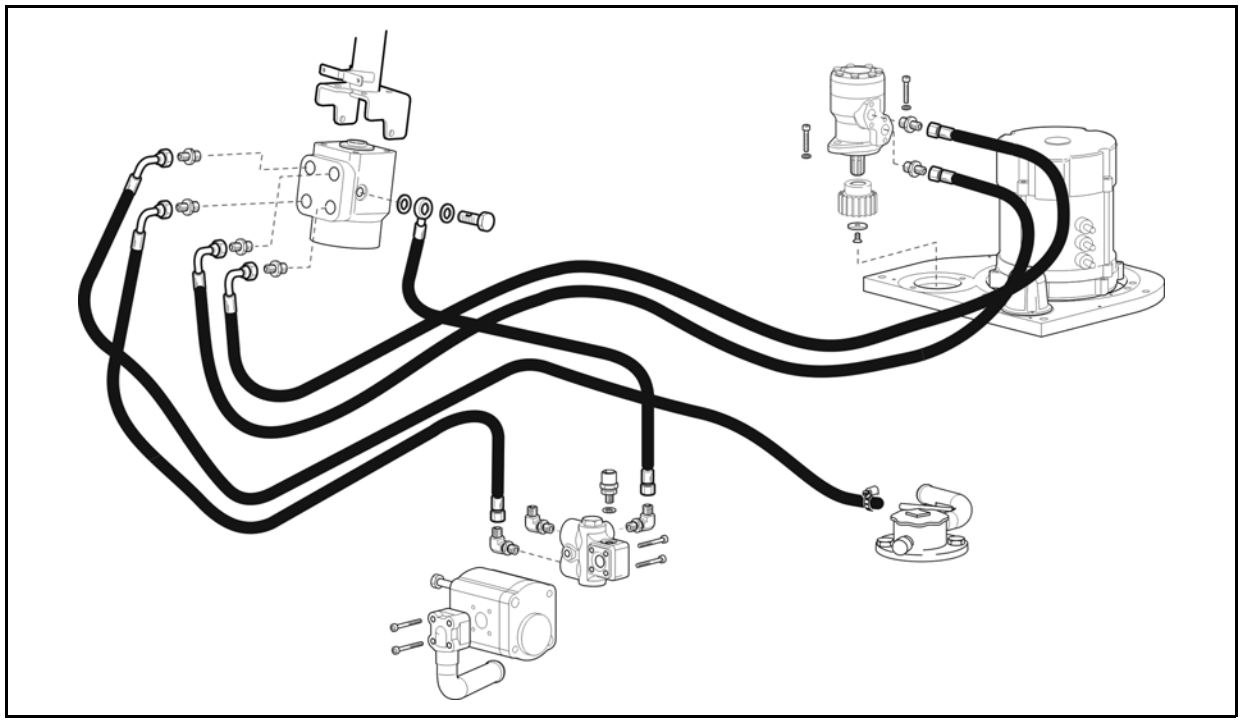

HYDRAULIC SYSTEM (WITH LEVER CONTROL VALVE)

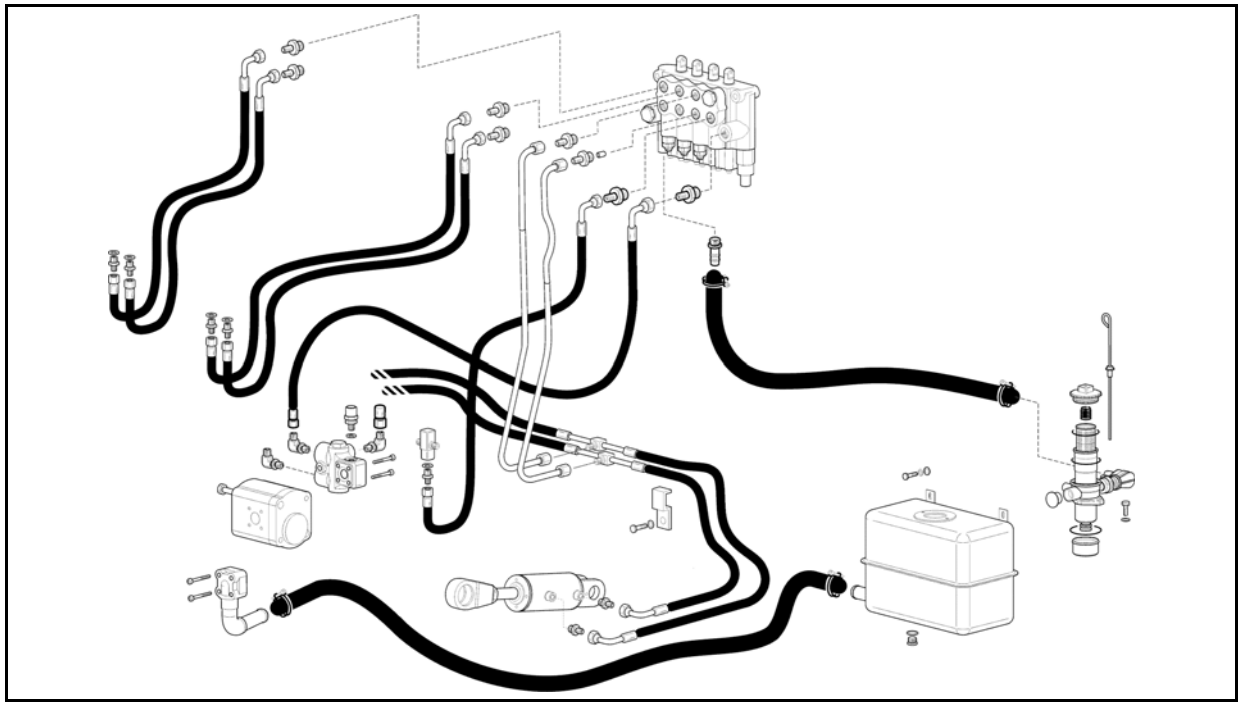

HYDRAULIC SYSTEM (WITH ELECTRIC CONTROL VALVE)

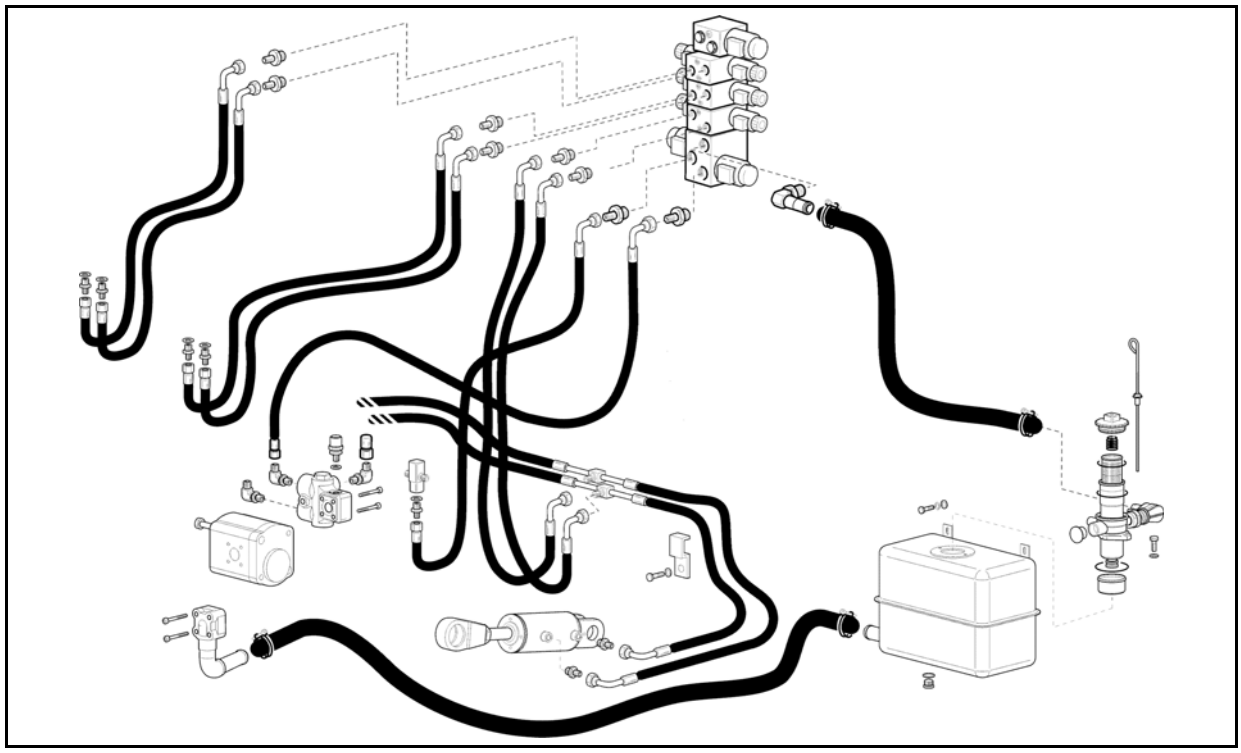

MAST 2M T.V.

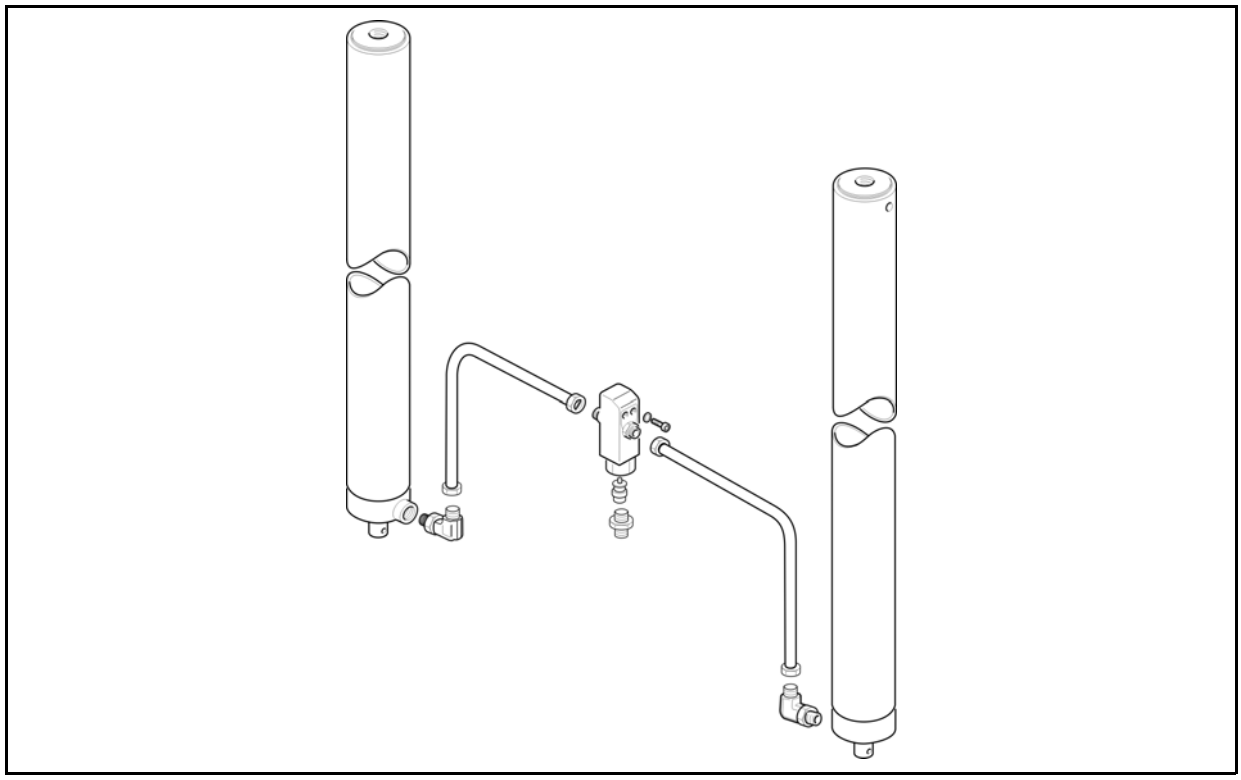

MAST 3M T.V.

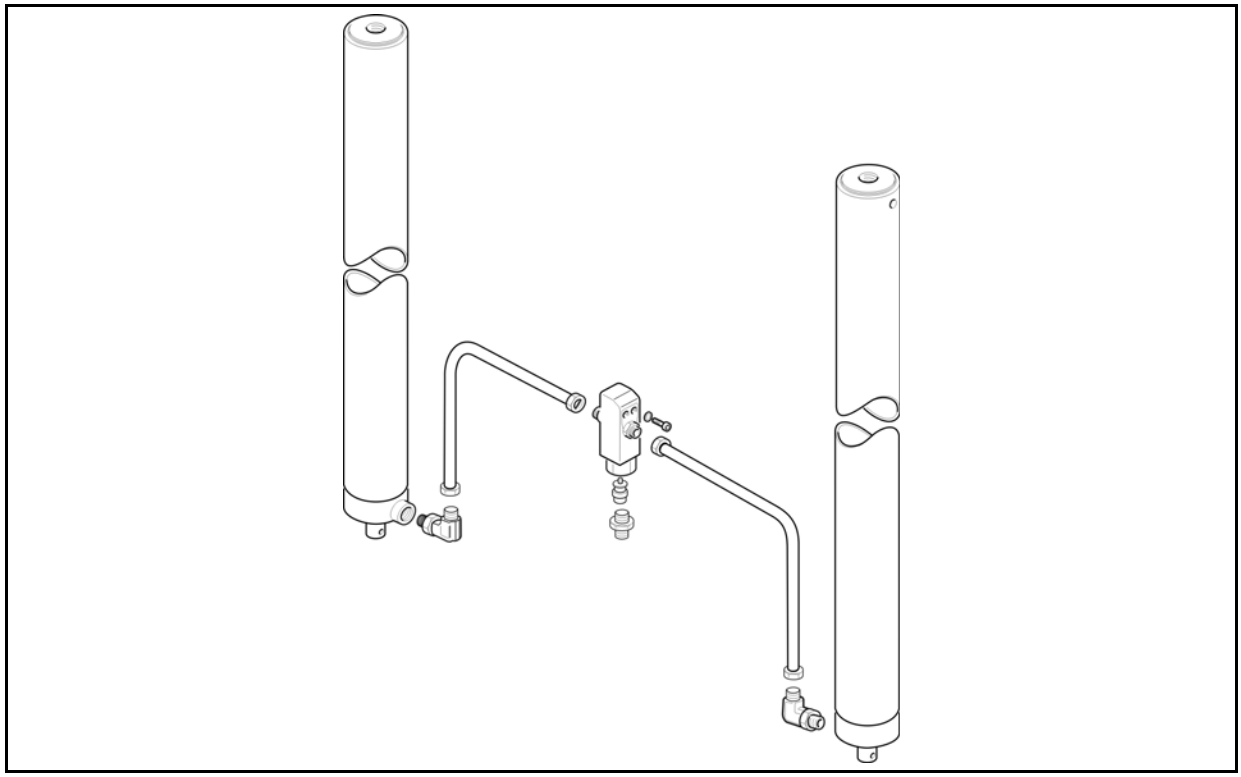

MAST 2M F.F.L.

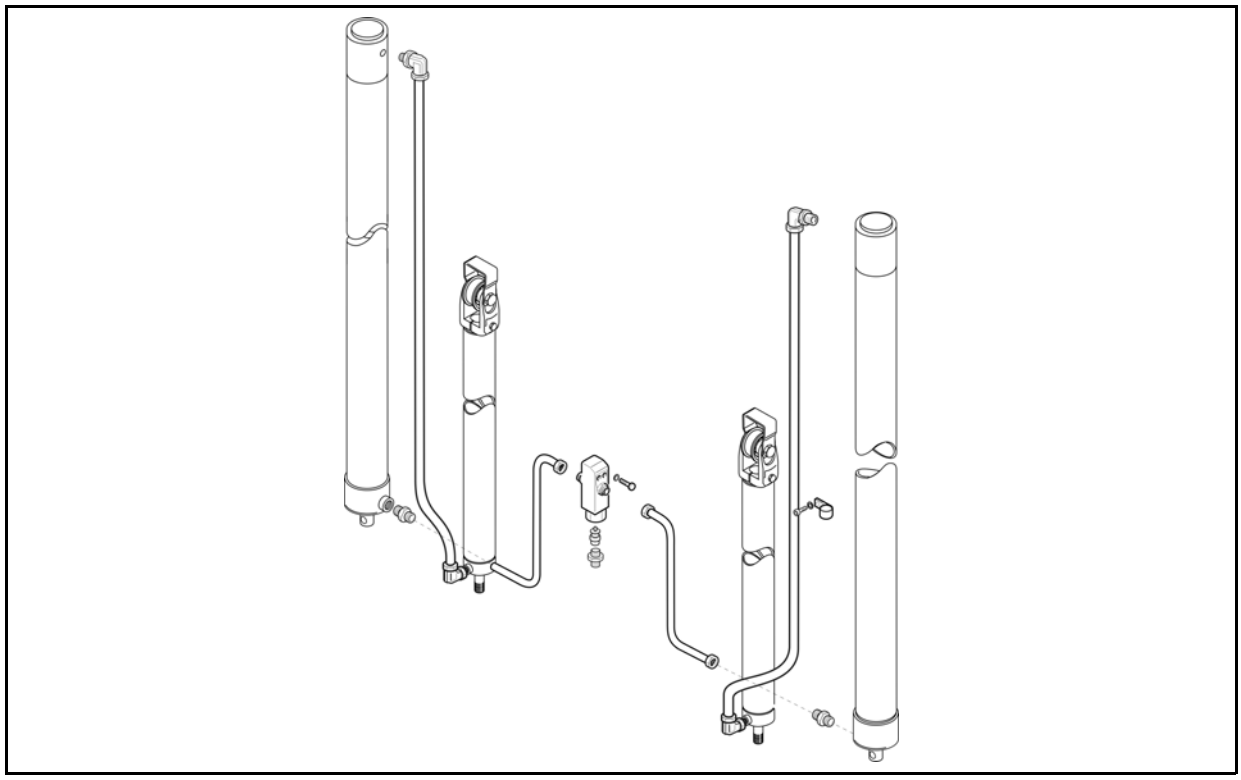

MAST 3M F.F.L.

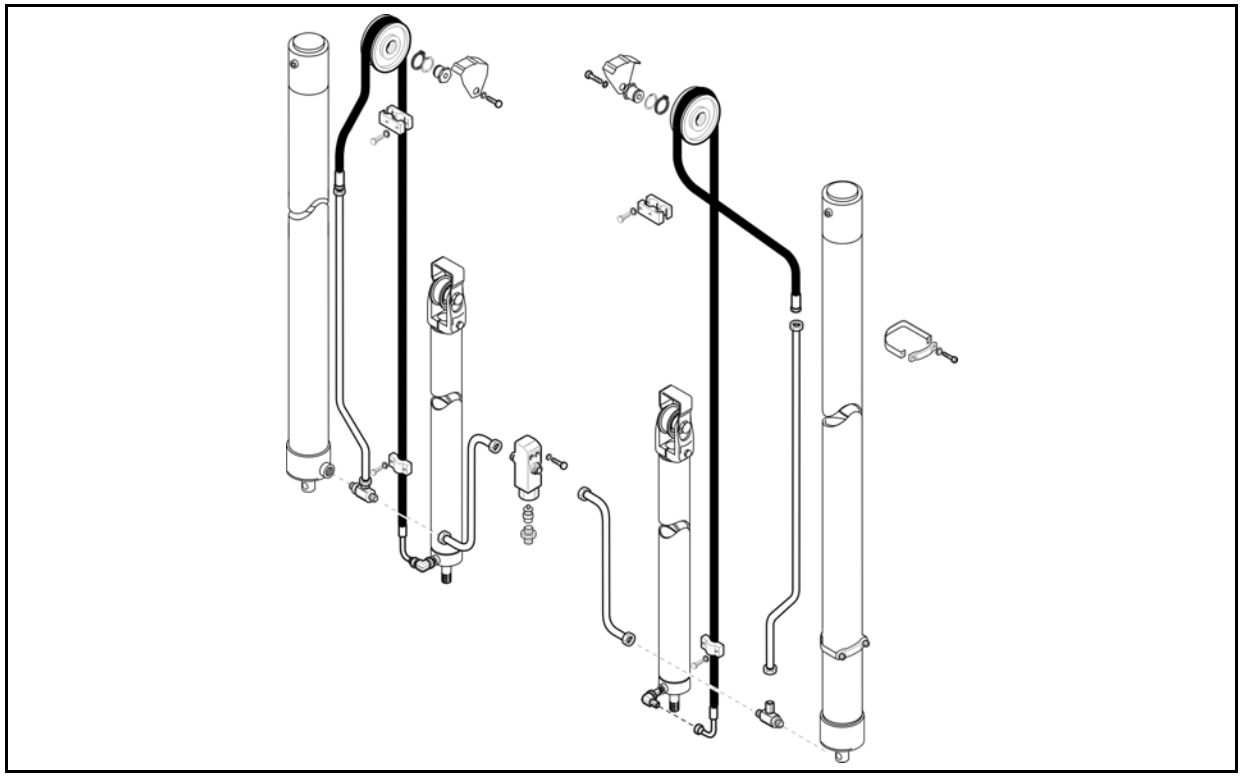

HYDRAULIC OIL AND FILTER

DISASSEMBLY • REASSEMBLY

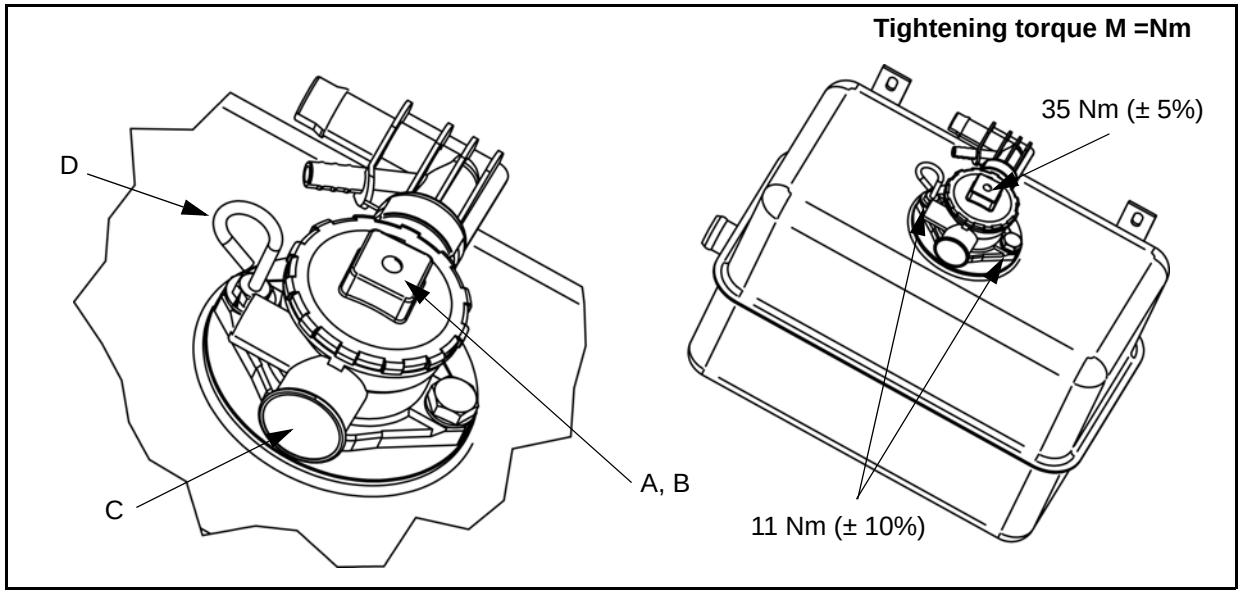

Disassembly Procedure

1. Place and stop the truck on a flat surface, with the mast in vertical position and the forks lowered
2. Disconnect the battery plug
3. Remove the foot board
4. Remove the tank cap **(A)**
5. Remove the oil filter cartridge **(B) [Point 1]**
6. Check and clean the tank breather valve **(C)**
7. Replace the oil
8. Replace the oil filter cartridge

Reassembly Procedure

The disassembly procedure is the reverse of the reassembly procedure.

Notes:
Check the state of the seals and that there are no oil leaks.
Check the oil level in the tank using the dip-stick (D) with the mast in vertical position and the forks lowered

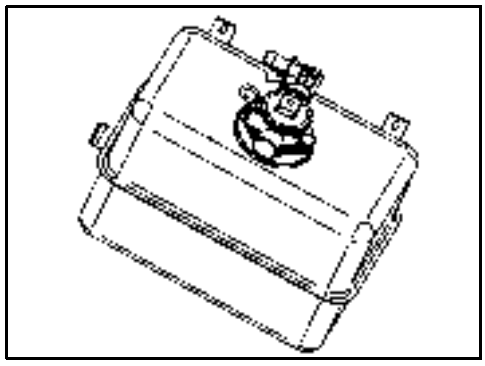

Notes:
With the double foot pedal and hand direction lever (single pedal) the hydraulic oil filter is on the middle position of the tank (see drawing)

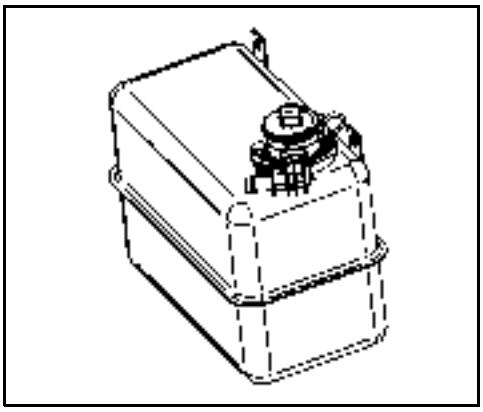

With the balanced pedal the hydraulic oil filter is on the left side of the tank (see drawing)

Point Operations

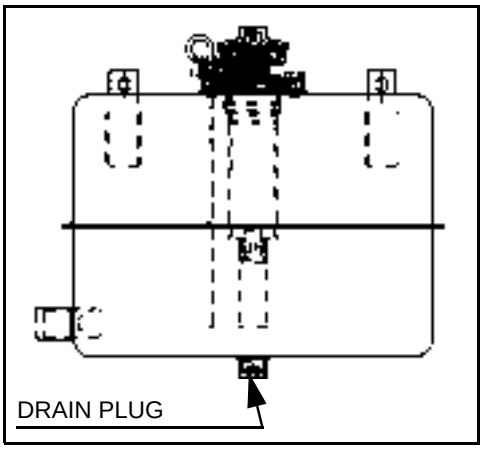

[Point 1]
Two different procedures can be followed to remove the hydraulic oil from the tank:

1. Remove the drain plug under the tank

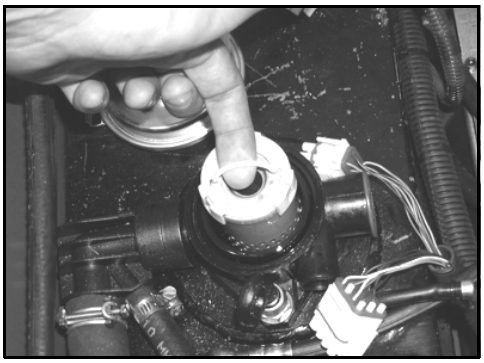

2. Remove the oil filter cartridge and then use a pump in order to drain out the hydraulic oil

OIL LEAK TEST

LIFTING CYLINDERS

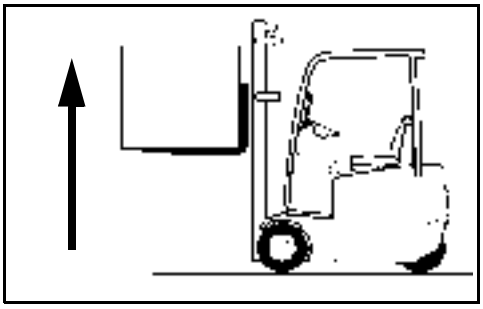

1. Set mast in vertical position with the standard load on forks
2. Lift forks at 3 m and take the measure between the forks and ground with a meter and leave the key switch ON
3. Make the measurement between forks and ground or between the datum lines on the inner and outer masts again after 10 minutes
   Limit: A = 100 mm
4. If there are oil leakages on the body of the lifting cylinders, check if cylinder connections are well tight. Replace the cylinder if necessary

TILTING CYLINDERS

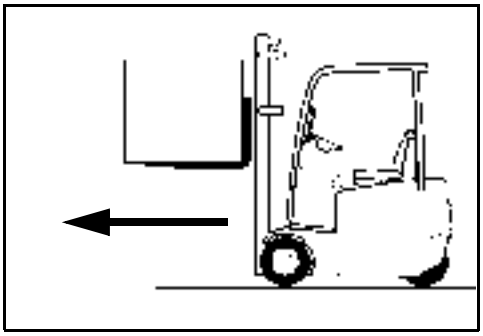

1. Set mast in vertical position with the standard load on forks, lift forks at 3 m and leave the key switch ON

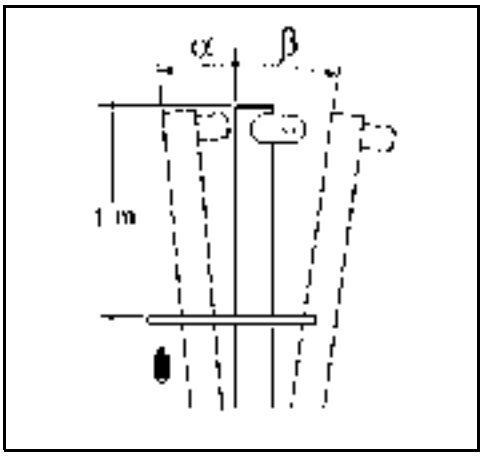

2. Secure the lead rope on the front edge of the top of the mast; measure the distance between the rope and the mast 1 m lower
3. Perform the same measurement 10 minutes after (1° = 17.4 mm)

Limit: Maximum forward angle (°) <= 0.5 (°/min)
Time (10 min)

4. If the truck is out of the above limit lower completely the mast and turn the key switch OFF
5. Invert the tilting hoses with the sideshift hoses (if present) on the control valve. This operation is necessary to understand if there is any internal leakage inside the tilting cylinder or the control valve
6. Turn the key switch ON and repeat the test from point 1 to 3; after that
   a) The test result is within the set limits:
      replace the control valve
   b) The test result is not within the set limits:
      replace the tilting cylinders

MAST

Page

MAST 11-2
COMPONENTS 11-2
MAST 11-6
MAST CONNECTION BUSHING 11-8
PRIMARY CYLINDER SUPPLY PIPES - MAST 2M TV 11-10
THIRD WAY SYSTEM (SUPPLY PIPES) - MAST 2M TV 11-11
THIRD WAY SYSTEM (PULLEYS) - MAST 2M TV 11-13
THIRD WAY SYSTEM (CHAINS) - MAST 2M TV 11-14
PRIMARY CYLINDER SUPPLY PIPES - MAST 3M TV 11-16
THIRD WAY SYSTEM (SUPPLY PIPES) - MAST 3M TV 11-17
THIRD WAY SYSTEM (PULLEYS) - MAST 3M TV 11-19
THIRD WAY SYSTEM (CHAINS) - MAST 3M TV 11-20
PRIMARY CYLINDER SUPPLY PIPES - MAST 2M FFL 11-22

Page

SECONDARY CYLINDER SUPPLY PIPES - MAST 2M FFL 11-23
THIRD WAY SYSTEM (SUPPLY PIPES) - MAST 2M FFL 11-24
THIRD WAY SYSTEM (CHAINS) - MAST 2M FFL 11-26
PRIMARY CYLINDER SUPPLY PIPES - MAST 3M FFL 11-28
SECONDARY CYLINDER SUPPLY PIPES - MAST 3M FFL 11-30
THIRD WAY SYSTEM (SUPPLY PIPES) - MAST 3M FFL 11-31
THIRD WAY SYSTEM (PULLEYS) - MAST 3M FFL 11-33
THIRD WAY SYSTEM (CHAINS) - MAST 3M FFL 11-35
ROLLER PAD 11-39
MOBILE MAST PAD 2M TV (4705 ÷ 5005 mm) 11-41
MAST CHAINS 11-42
FORK 11-44

MAST

COMPONENTS

MAST 2M TV (V)

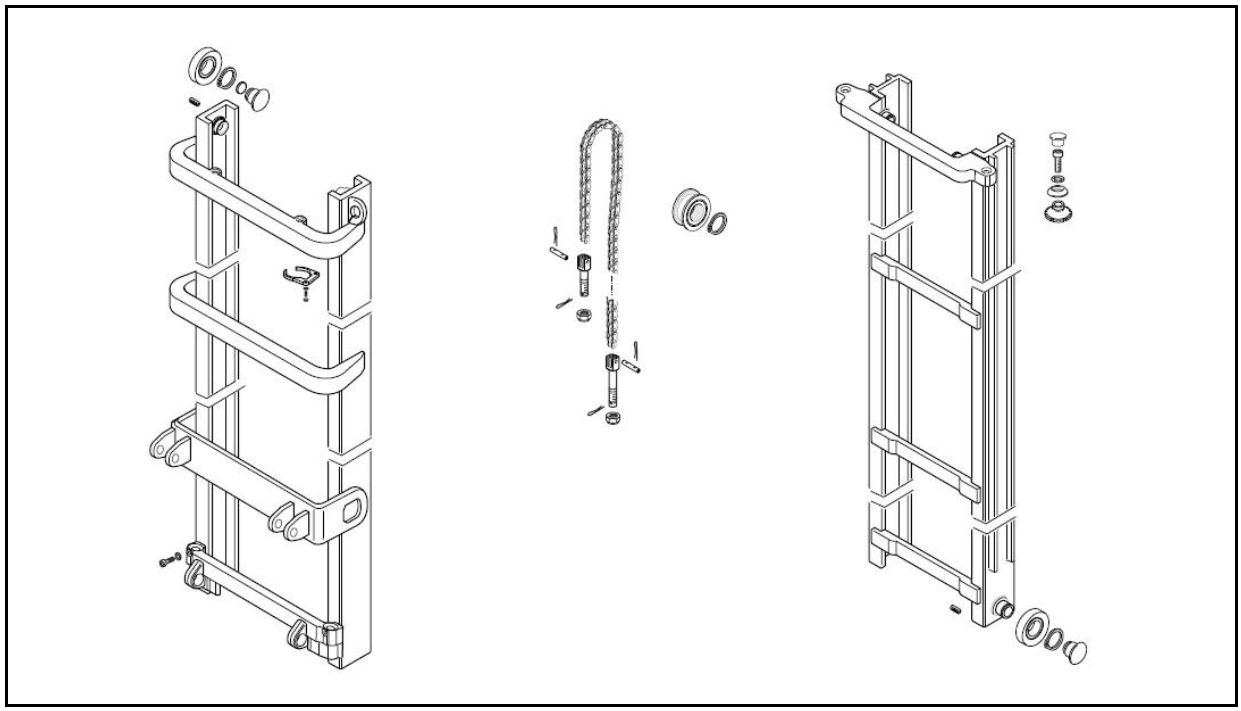

MAST 3M TV (*I*)

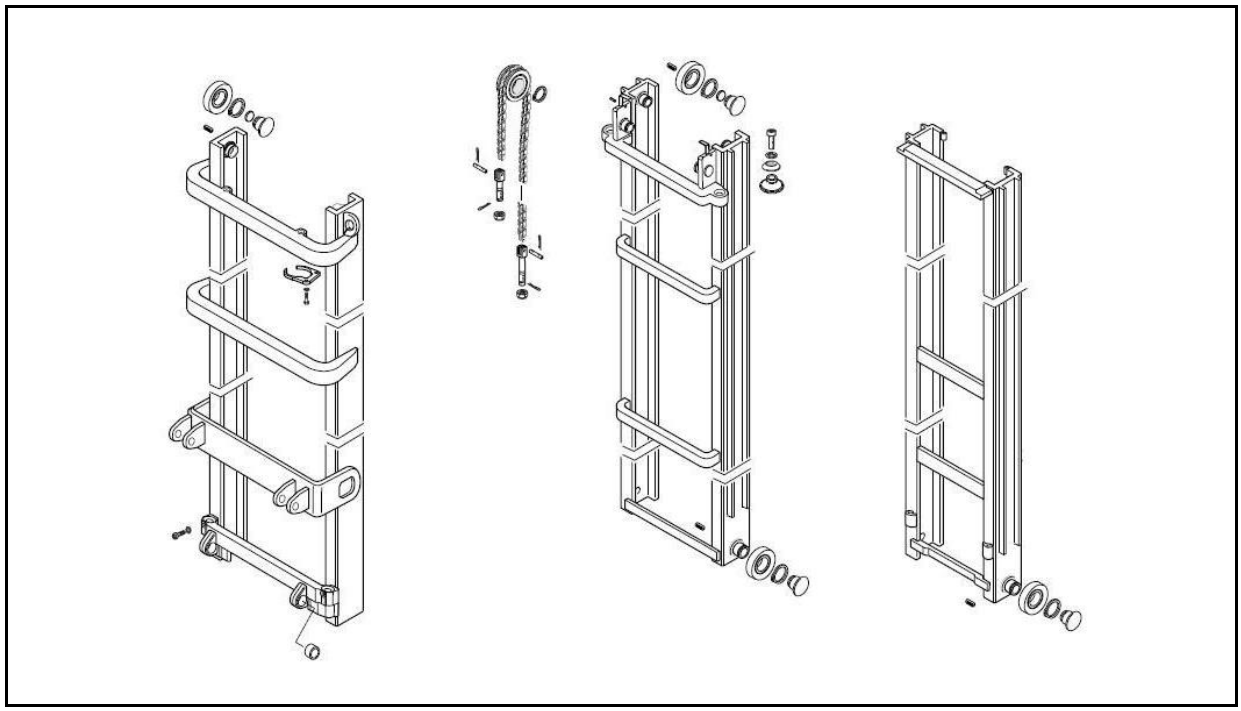

MAST 2M TV (FW)

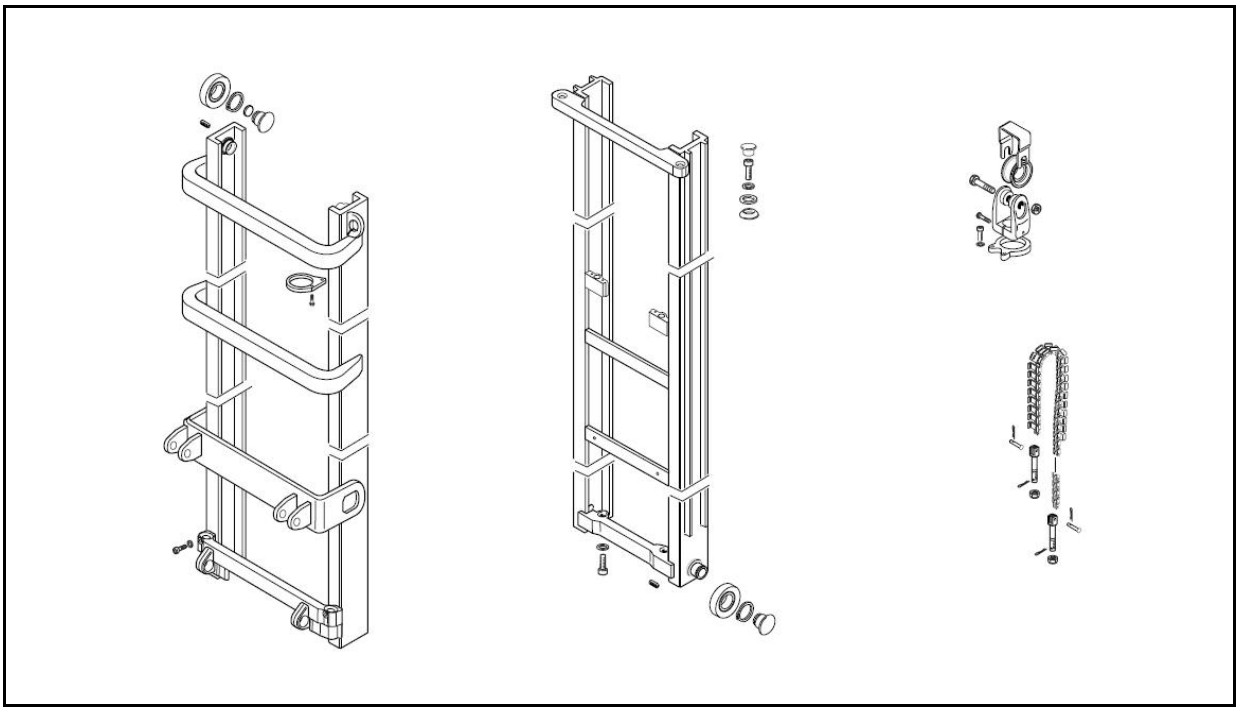

MAST 3M FFL (FSW)

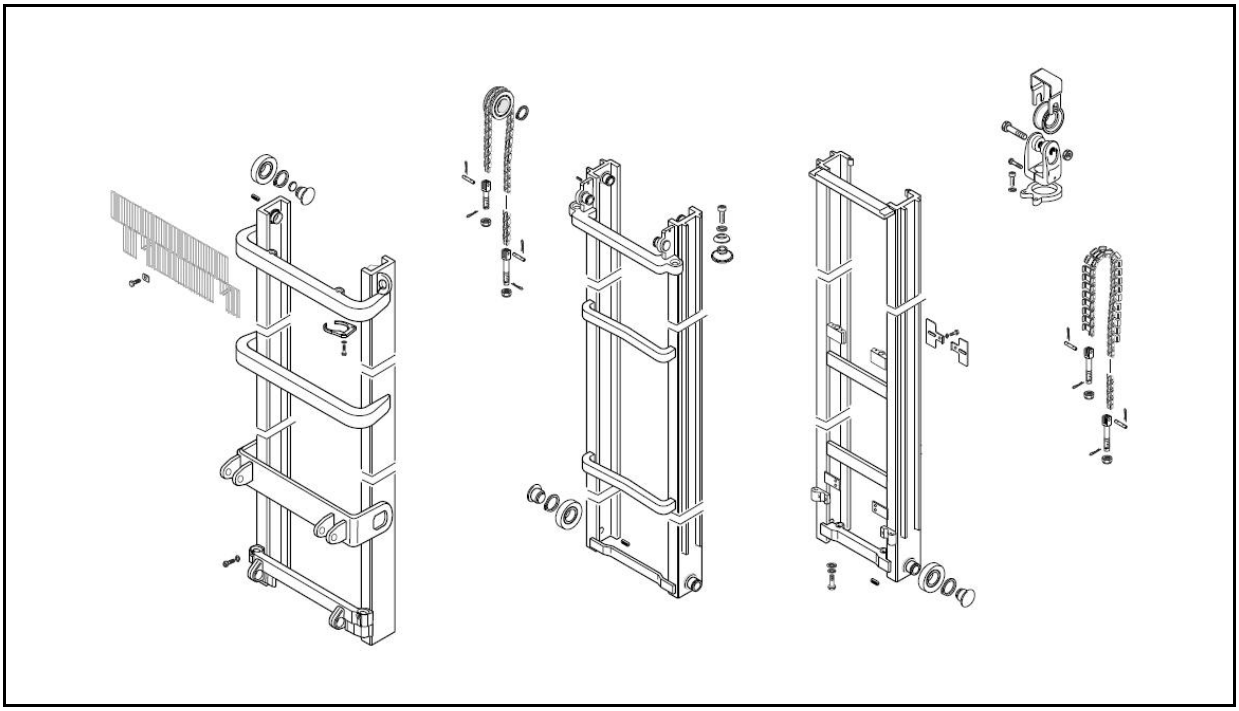

FORK CARRIAGE 2M TV - 3M TV - 2M FFL - 3M FFL

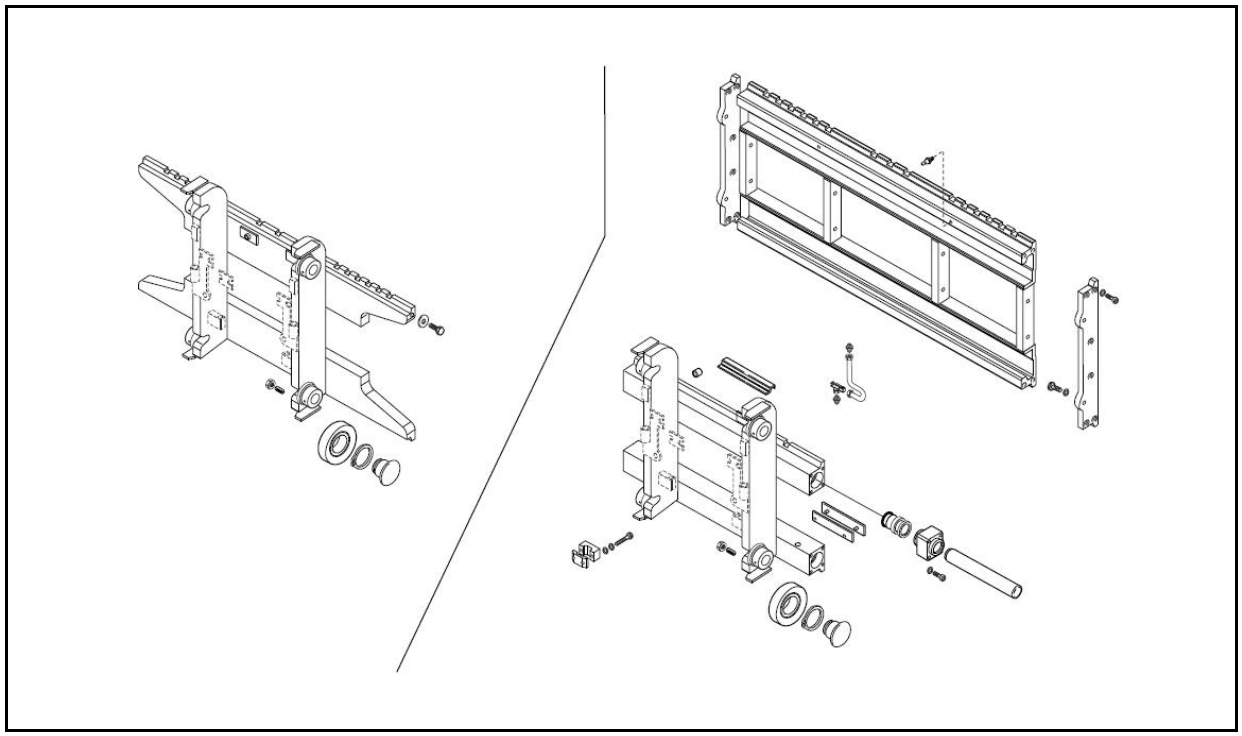

CHAINS AND ROLLERS 2M TV - 3M TV - 3M F.F.L (side)

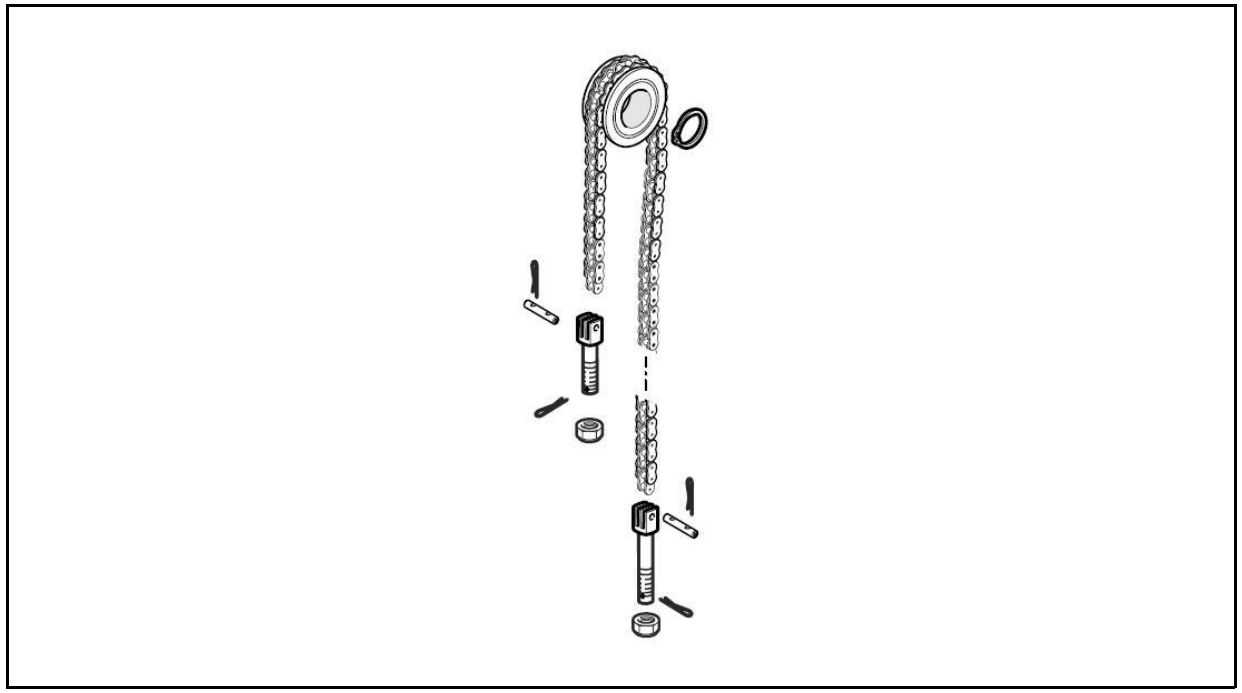

CHAINS AND ROLLERS 2M FFL - 3M FFL (central)

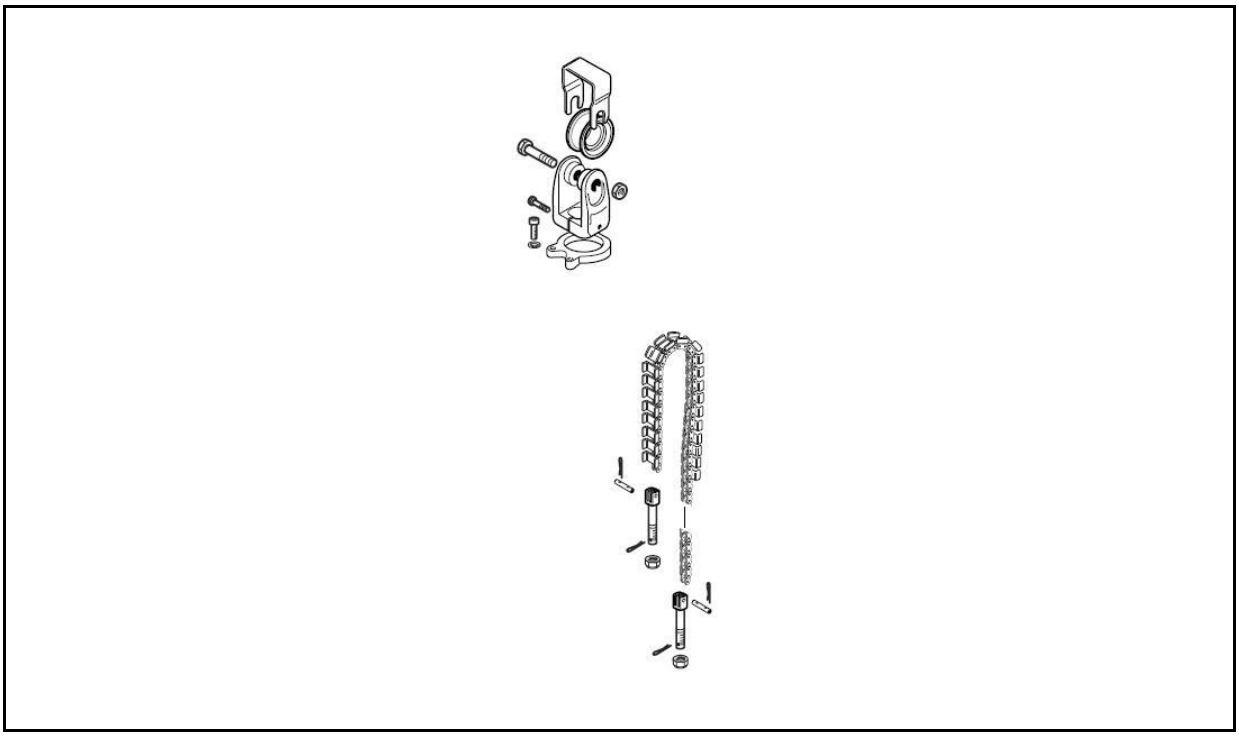

MAST

REMOVAL • INSTALLATION

T=N·m

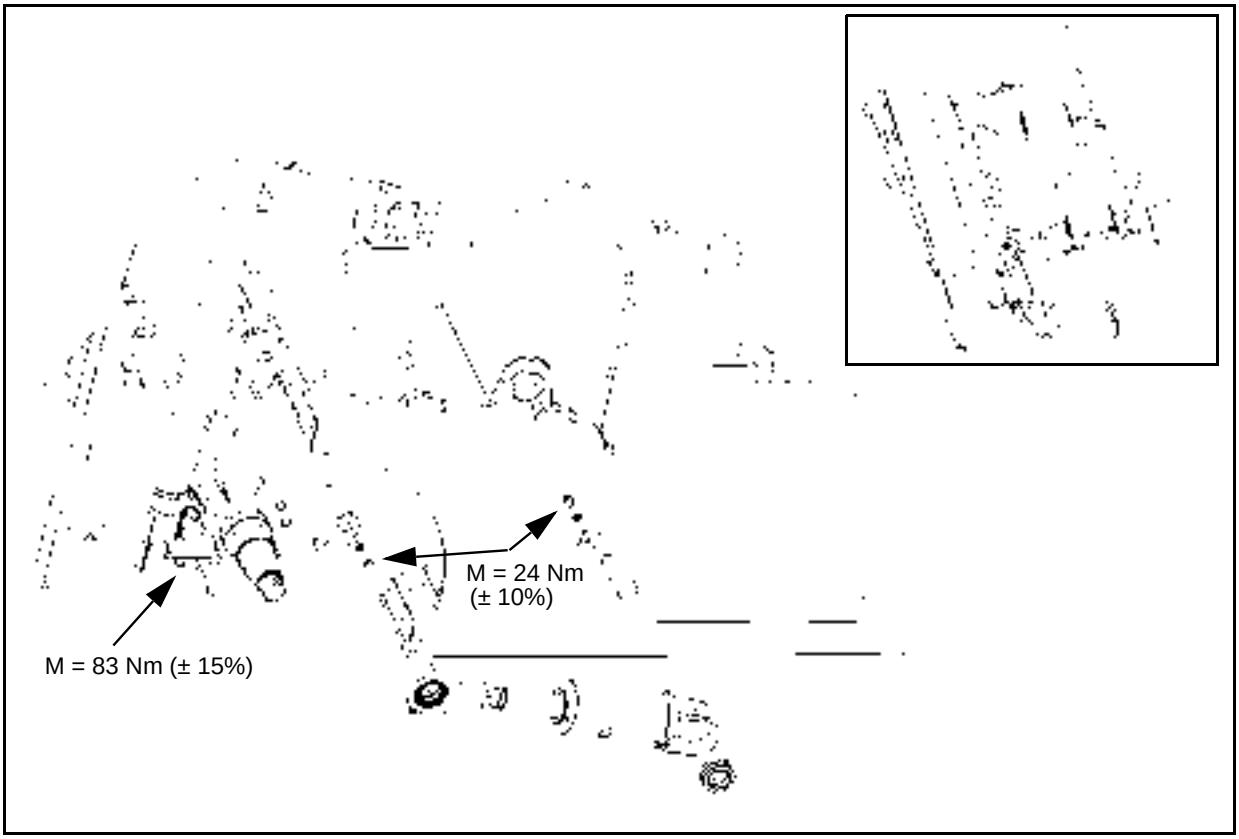

Removal procedure

1. Put the mast in vertical position
2. Disconnect the battery connector
3. Connect the chains on the mast **[Point 1]**
4. Disconnect the hydraulic hoses from the mast (lifting, sideshift, ...)
5. Remove the bolts of the mast **[Point 2]**
6. Remove the pins from the tilting cylinders **[Point 3]**
7. Remove the mast

Installation procedure

The reassembly procedure is the reverse of the disassembly procedure.

Note:
Apply appropriate grease to the mast support bushing, mast support cap interior surfaces and tilting cylinder front pins

Point Operation

[Point 1]
Disassembly:

Fully lower the mast;
Connect the chain on the points shown before removing the mast

[Point 2]
Disassembly:

Remove the 4 bolts that fix the mast to the frame from the bottom

Installation:

After installation, tightening torque of the 4 screw of the mast = **83 Nm**

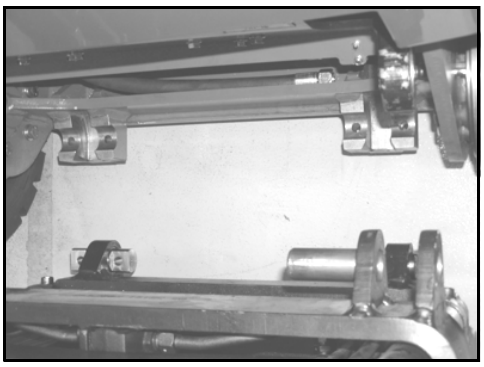

[Point 3]
Disassembly:

Remove the 2 screws of the safety plates and then the 2 pins of the tilting cylinders.

Installation:

After installation, tightening torque of the 2 screws of the safety plates for the pins of tilting cylinders = **24 Nm**

MAST CONNECTION BUSHING

REMOVAL • INSTALLATION

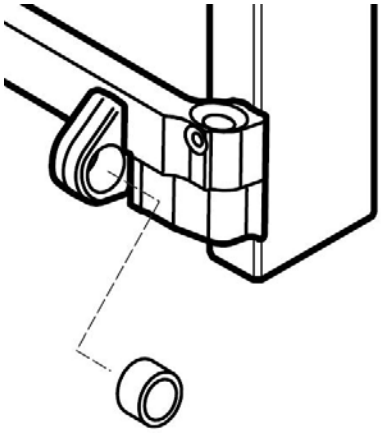

Removal procedure

1. Follow the procedure indicated in the previous page
2. Remove the bushings **[Point 1]**

Installation procedure

The reassembly procedure is the reverse of the disassembly procedure.

Remarks:
Apply suitable lubricating grease to the mast connection bushings

Point Operation

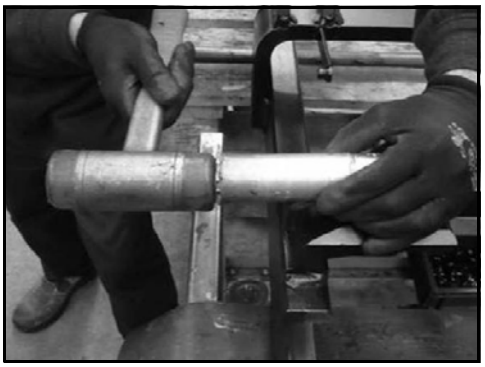

[Point 1]
Disassembly:
Use a bronze extractor

Installation:
Prepare the bushing

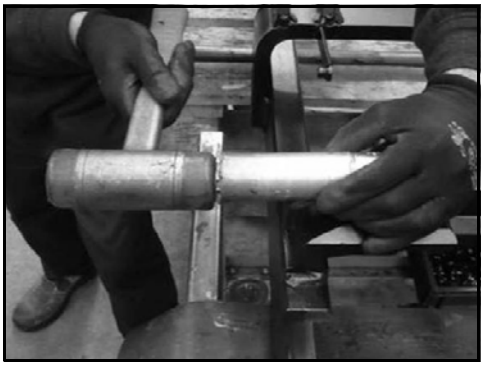

Use a bronze inserter

Inspection:
Check that the bushing is perfectly in position (i.e. it does not come out of its support)

PRIMARY CYLINDER SUPPLY PIPES - MAST 2M TV

REMOVAL • INSTALLATION

T=N·m

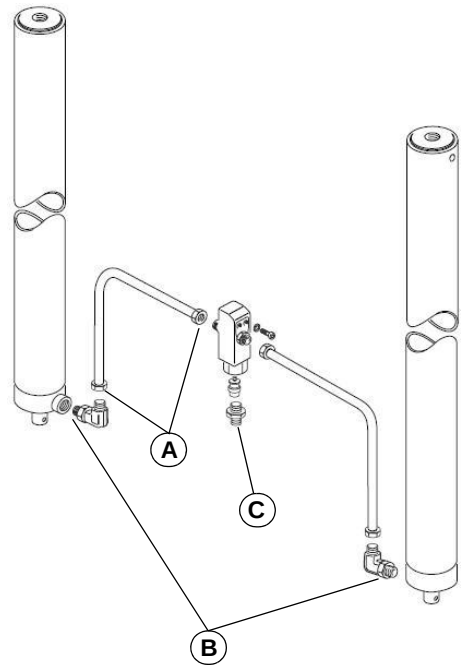

A = 55 ± 5 Nm
B = 75 ± 5 Nm
C = 100 Nm

Removal procedure

1. Tilt the mast forwards and lock the mobile mast and carriage using appropriately sized and protected eyebolts and belts
2. Lower the mast to prevent the supply pipes from remaining in tension
3. Position a container to collect the oil
4. Remove the pipes

Installation procedure

The reassembly procedure is the reverse of the disassembly procedure.

Remarks:
Fix both ends of the rigid pipe before tightening

THIRD WAY SYSTEM (SUPPLY PIPES) - MAST 2M TV

REMOVAL • INSTALLATION

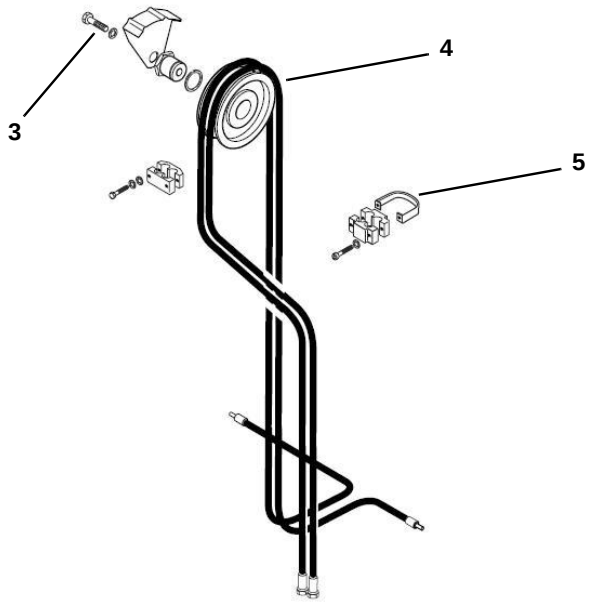

Removal procedure

1. Tilt the mast forwards and lock the mobile mast and carriage using appropriately sized and protected eye bolts and belts
2. Lower the mast to prevent the supply pipes from remaining in tension
3. Remove the pulley fixing screws
4. Remove the third way supply pulley, including the pin and the fixing ring
5. Remove the terminals **[Point 1]**
6. Position a container to collect the oil
7. Remove the pipes **[Point 2]**

Installation procedure

The reassembly procedure is the reverse of the disassembly procedure.

Point Operation

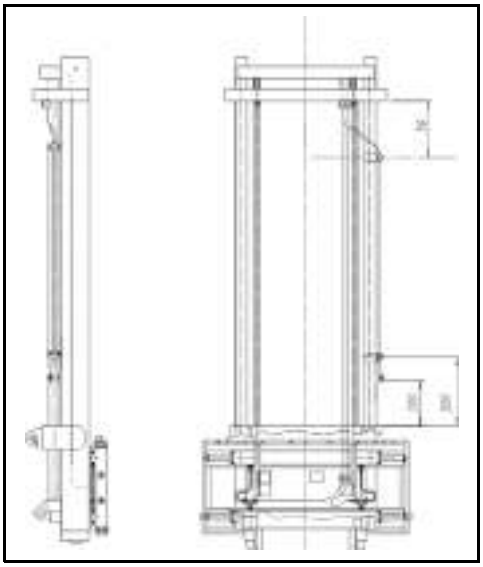

[Point 1]
Installation:
Comply with the sizing indicated in the figure to the side

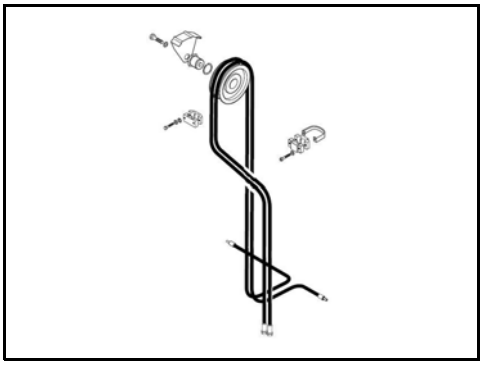

[Point 2]
Installation:
Prevent the pipes from rotating on their axis when raising/lowering

Important:
Prevent any pipes kept under pressure from causing a hazard during raising/lowering

THIRD WAY SYSTEM (PULLEYS) - MAST 2M TV

REMOVAL • INSTALLATION

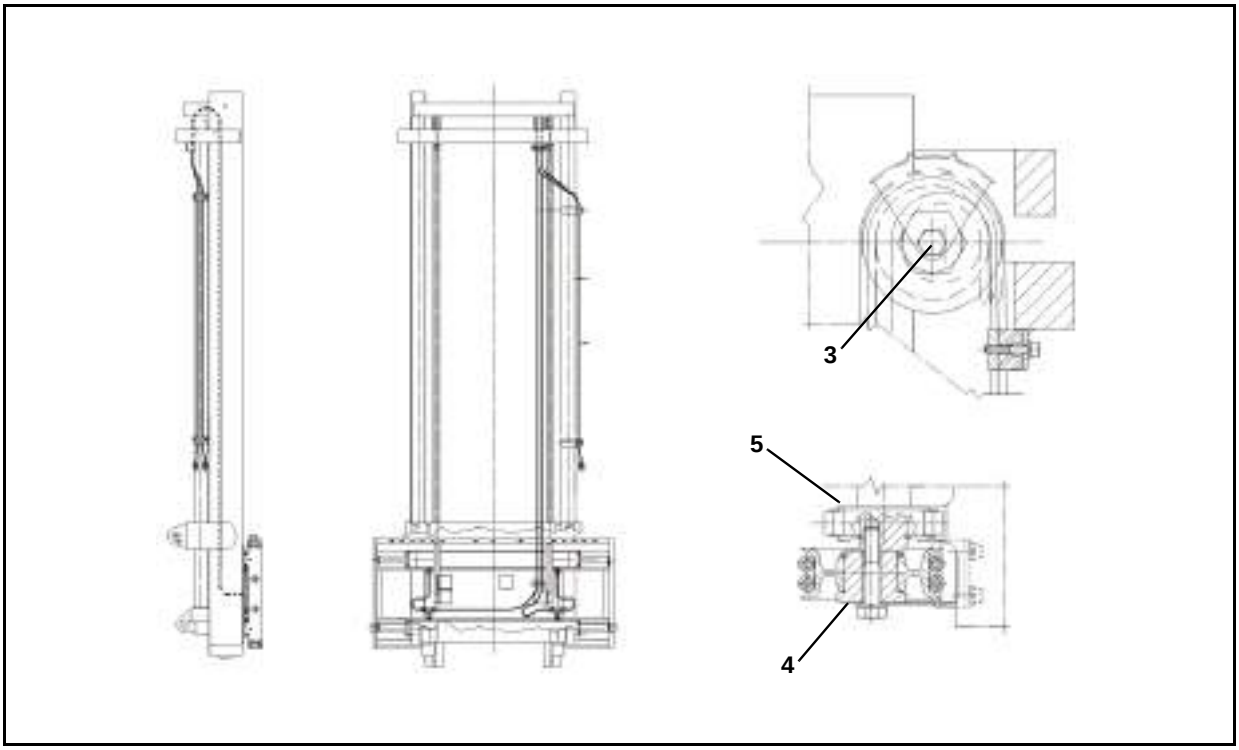

Removal procedure

1. Tilt the mast forwards and lock the mobile mast and carriage using appropriately sized and protected eye bolts and belts
2. Lower the mast to prevent the supply pipes from remaining in tension
3. Remove the pulley fixing screws
4. Remove the third way supply pulley, including the pin and the fixing ring
5. Remove the chain pulley

Installation procedure

The reassembly procedure is the reverse of the disassembly procedure.

Remarks:
Lubricate the pin with MP grease before coupling to the pulley

THIRD WAY SYSTEM (CHAINS) - MAST 2M TV

REMOVAL • INSTALLATION

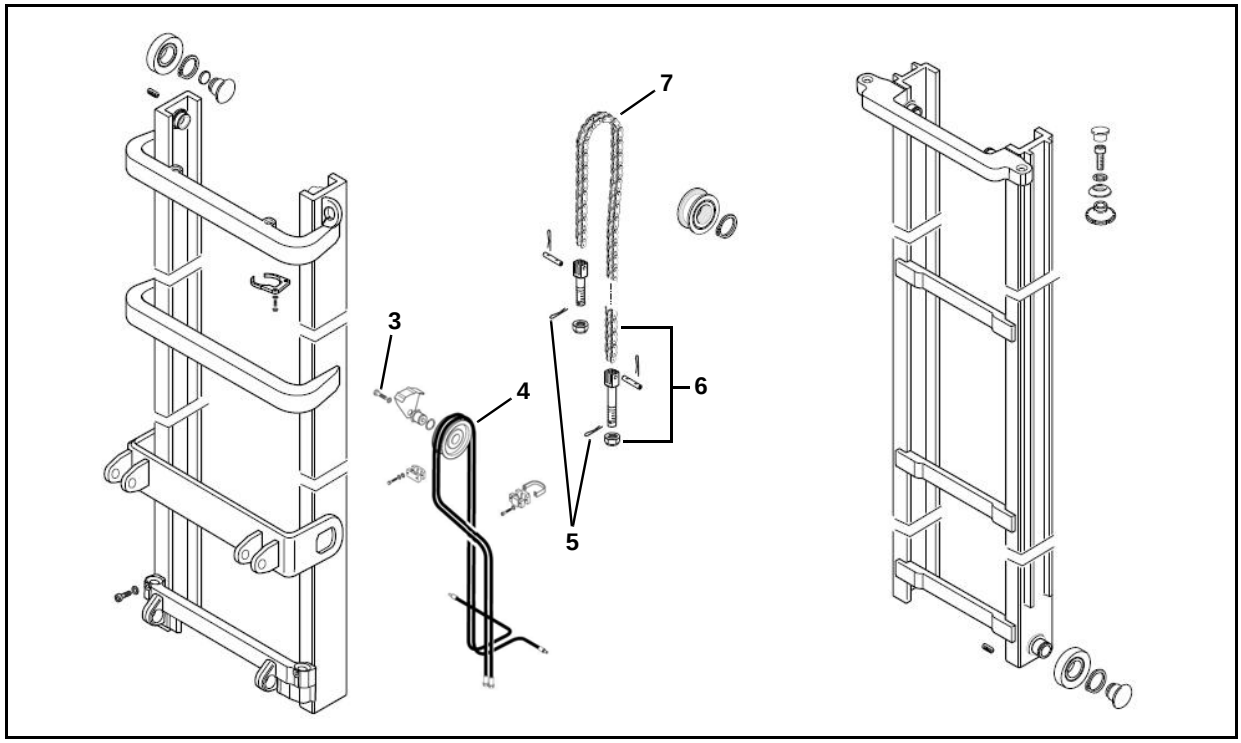

Removal procedure

1. Tilt the mast forwards and lock the mobile mast and carriage using appropriately sized and protected eye bolts and belts
2. Lower the mast to prevent the supply pipes from remaining in tension
3. Remove the pulley fixing screws
4. Remove the third way supply pulley, including the pin and the fixing ring
5. Remove the split pin **[Point 1]**
6. Remove the nut
7. Remove the chain **[Point 2]**

Installation procedure

The reassembly procedure is the reverse of the disassembly procedure.

Remarks:
Install new split pins

Point Operation

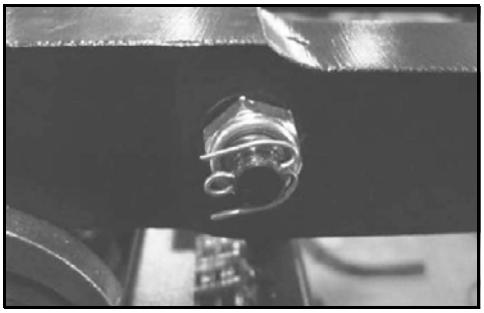

[Point 1]
Disassembly:
Straighten the fins

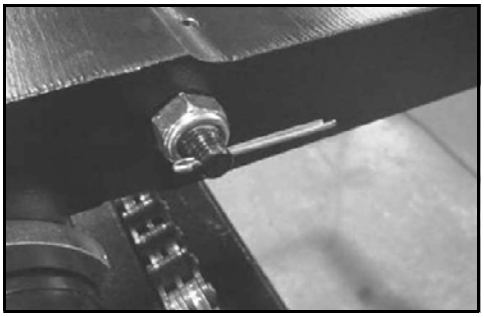

Disassembly:
Slide out the split pin

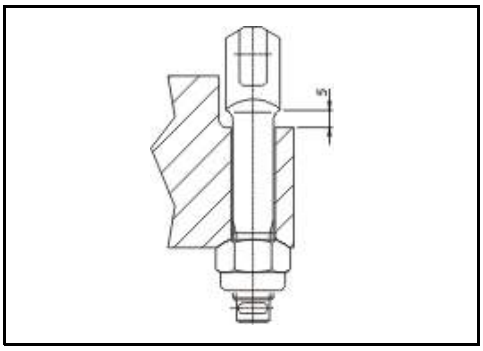

[Point 2]
Installation:
Comply with the sizing indicated in the figure to the side (image refers to fixed mast)

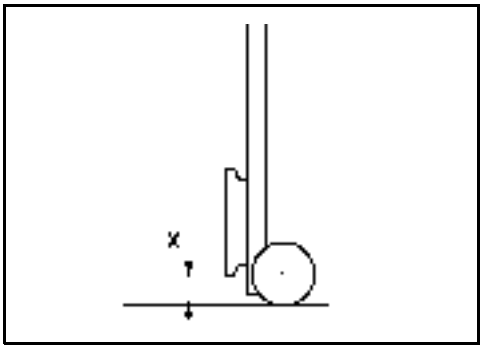

Inspection:
Remove the forks and check that the X height complies with the **ISO** tables shown in the MAST CHAINS section; if not, turn the tension rods on the carriage. Check that there is no interference with the limit switch when the mast is at maximum height

PRIMARY CYLINDER SUPPLY PIPES - MAST 3M TV

REMOVAL • INSTALLATION

T=N·m

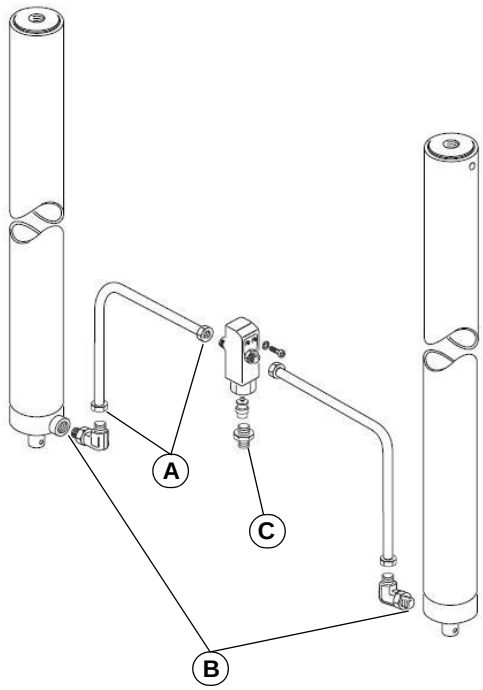

A = 55 ± 5 Nm
B = 75 ± 5 Nm
C = 100 Nm

Removal procedure

1. Tilt the mast forwards and lock the mobile mast and carriage using appropriately sized and protected eye bolts and belts
2. Lower the mast to prevent the supply pipes from remaining in tension
3. Position a container to collect the oil
4. Remove the pipes

Installation procedure

The reassembly procedure is the reverse of the disassembly procedure.

Remarks:
Fix both ends of the rigid pipe before tightening

THIRD WAY SYSTEM (SUPPLY PIPES) - MAST 3M TV

REMOVAL • INSTALLATION

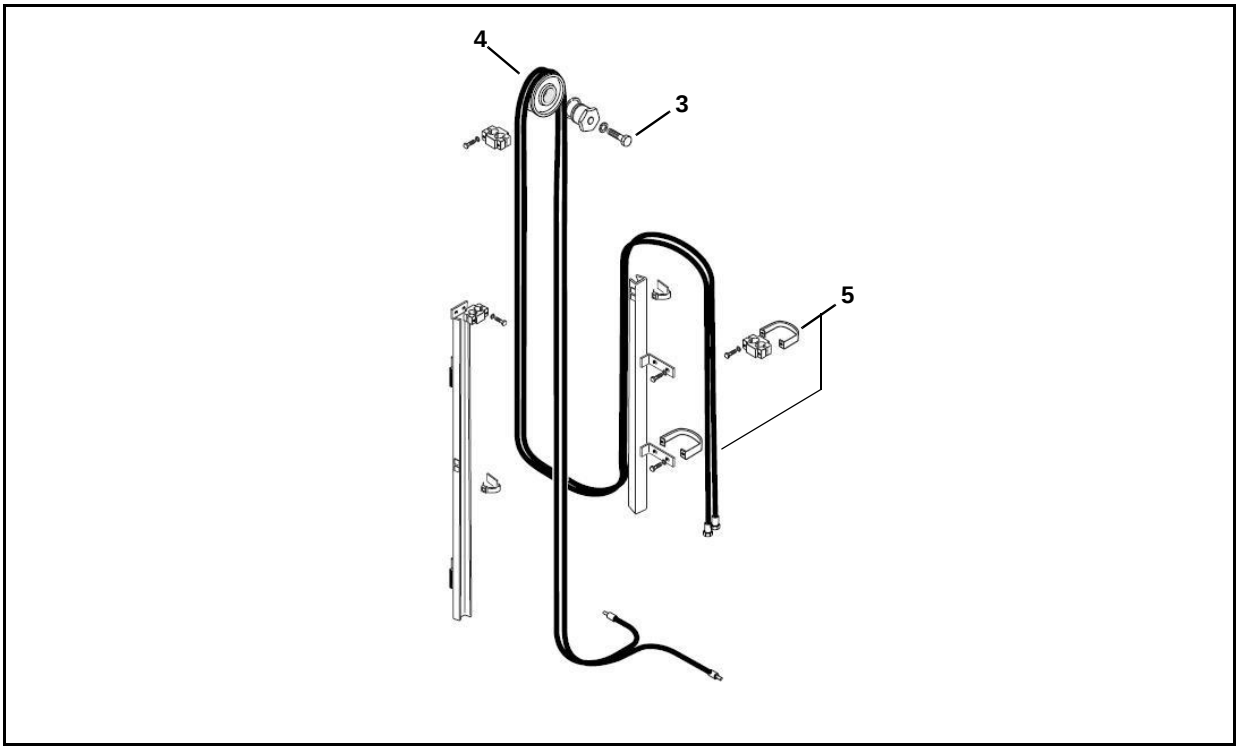

Removal procedure

1. Tilt the mast forwards and lock the mobile mast and carriage using appropriately sized and protected eye bolts and belts
2. Lower the mast to prevent the supply pipes from remaining in tension
3. Remove the pulley fixing screws
4. Remove the third way supply pulley, including the pin and the fixing ring
5. Remove the terminals **[Point 1]**
6. Position a container to collect the oil
7. Remove the pipes **[Point 2]**

Installation procedure

The reassembly procedure is the reverse of the disassembly procedure.

Point Operation

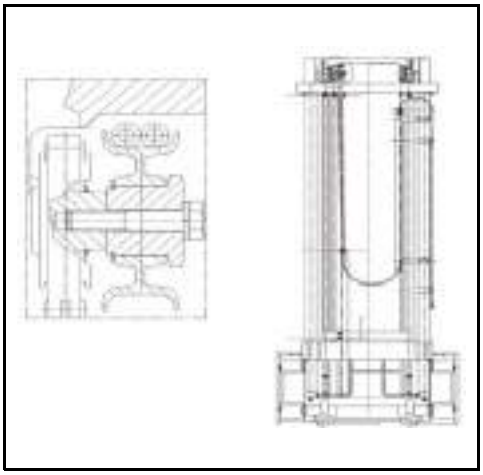

[Point 1]
Installation:

Comply with the sizing indicated in the figure to the side

X = 240 mm (mast height 4310);
X = 240 mm (mast height 4505);
X = 320 mm (mast height 5000);
X = 440 mm (mast height 5510);
X = 500 mm (mast height 6005);
X = 620 mm (mast height 6500)

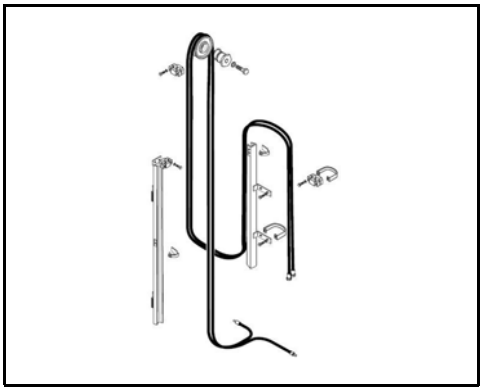

[Point 2]
Installation:

Prevent the pipes from rotating on their axis when raising/lowering

Important:
Prevent any pipes kept under pressure from causing a hazard during raising/lowering

THIRD WAY SYSTEM (PULLEYS) - MAST 3M TV

REMOVAL • INSTALLATION

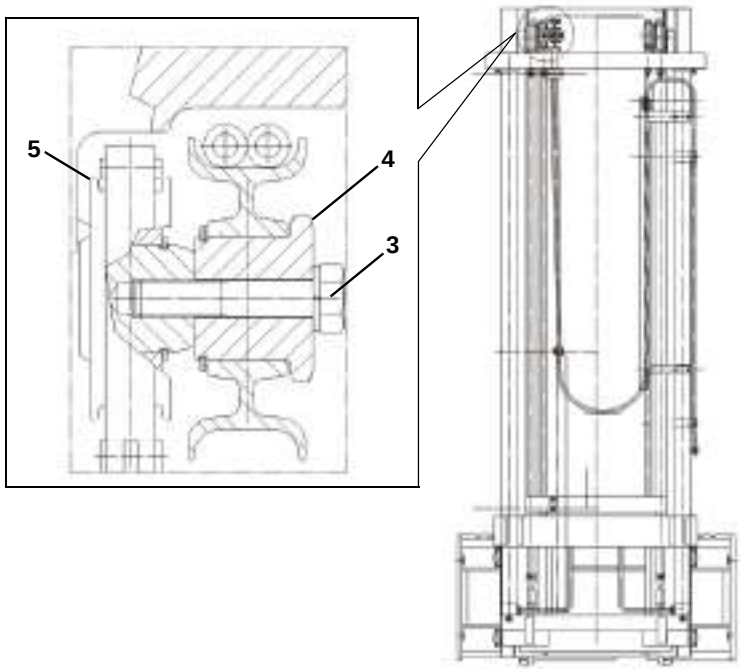

Removal procedure

1. Tilt the mast forwards and lock the mobile mast and carriage using appropriately sized and protected eye bolts and belts
2. Lower the mast to prevent the supply pipes from remaining in tension
3. Remove the pulley fixing screws
4. Remove the third way supply pulley, including the pin and the fixing ring
5. Remove the chain pulley

Installation procedure

The reassembly procedure is the reverse of the disassembly procedure.

Remarks:
Lubricate the pin with MP grease before coupling to the pulley

THIRD WAY SYSTEM (CHAINS) - MAST 3M TV

REMOVAL • INSTALLATION

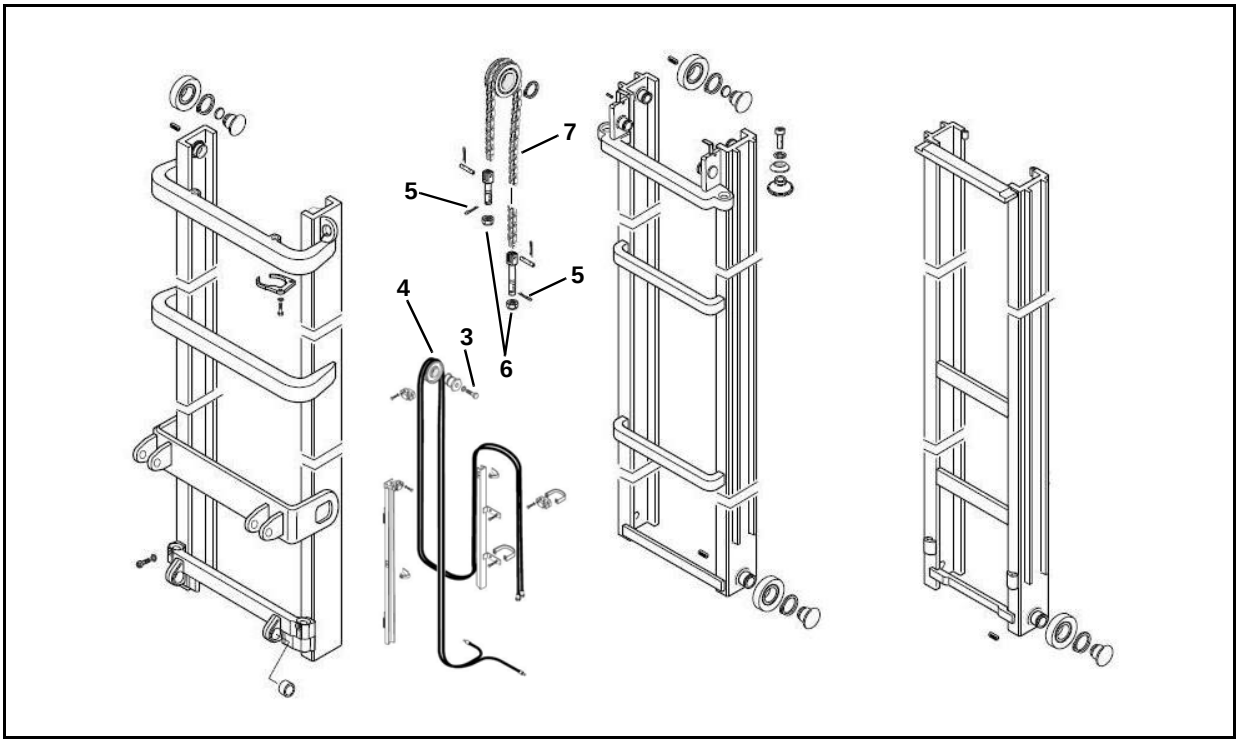

Removal procedure

1. Tilt the mast forwards and lock the mobile mast and carriage using appropriately sized and protected eye bolts and belts
2. Lower the mast to prevent the supply pipes from remaining in tension
3. Remove the pulley fixing screws
4. Remove the third way supply pulley, including the pin and the fixing ring
5. Remove the split pin **[Point 1]**
6. Remove the nut
7. Remove the chain **[Point 2]**

Installation procedure

The reassembly procedure is the reverse of the disassembly procedure.

Remarks:
Install new split pins

Point Operation

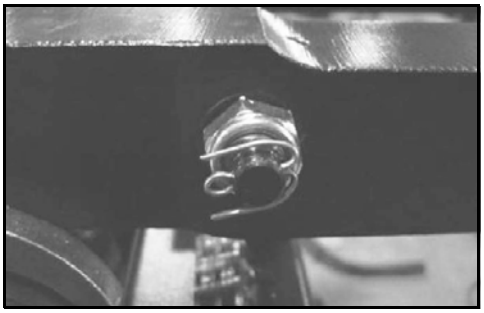

[Point 1]
Disassembly:
Straighten the fins

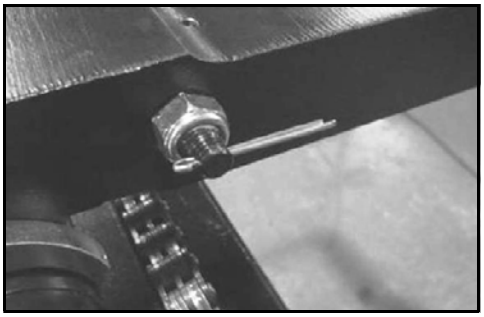

Disassembly:
Slide out the split pin

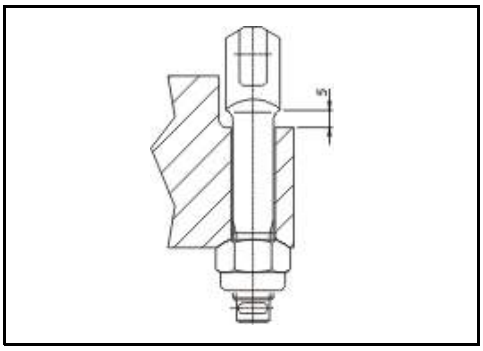

[Point 2]
Installation:
Comply with the sizing indicated in the figure to the side (image refers to fixed mast)

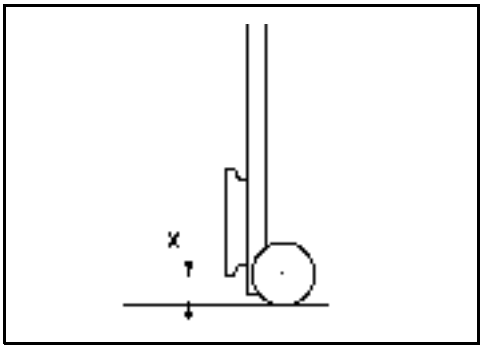

Inspection:
Remove the forks and check that the X height complies with the **ISO** tables shown in the MAST CHAINS section; if not, turn the tension rods on the carriage. Check that there is no interference with the limit switch when the mast is at maximum height

PRIMARY CYLINDER SUPPLY PIPES - MAST 2M FFL

REMOVAL • INSTALLATION

T=N·m

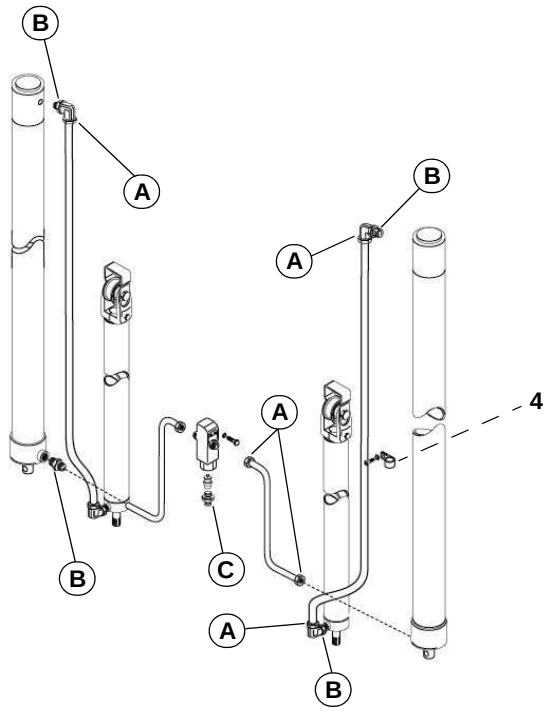

A = 55 ± 5 Nm
B = 75 ± 5 Nm
C = 100 Nm

Removal procedure

1. Tilt the mast forwards and lock the mobile mast and carriage using appropriately sized and protected eye bolts and belts
2. Lower the mast to prevent the supply pipes from remaining in tension
3. Position a container to collect the oil
4. Remove the metal clamp
5. Remove the pipes

Installation procedure

The reassembly procedure is the reverse of the disassembly procedure.

Remarks:
Fix both ends of the rigid pipe before tightening

SECONDARY CYLINDER SUPPLY PIPES - MAST 2M FFL

REMOVAL • INSTALLATION

T=N·m

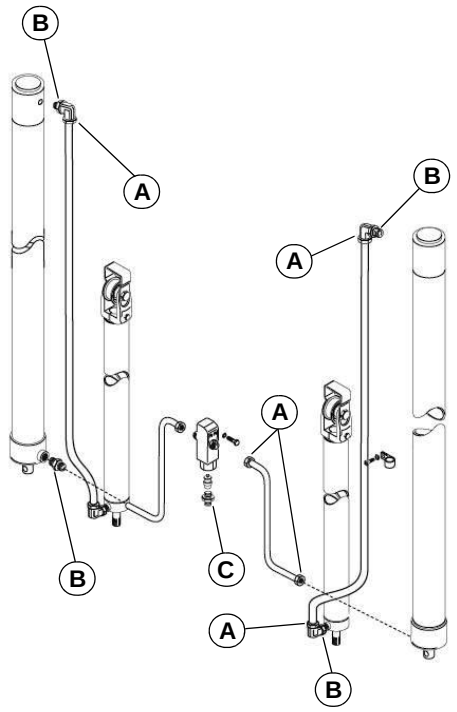

A = 55 ± 5 Nm
B = 75 ± 5 Nm
C = 100 Nm

Removal procedure

1. Tilt the mast forwards and lock the mobile mast and carriage using appropriately sized and protected eye bolts and belts
2. Lower the mast to prevent the supply pipes from remaining in tension
3. Position a container to collect the oil
4. Remove the pipes

Installation procedure

The reassembly procedure is the reverse of the disassembly procedure.

Remarks:
Fix both ends of the rigid pipe before tightening

THIRD WAY SYSTEM (SUPPLY PIPES) - MAST 2M FFL

REMOVAL • INSTALLATION

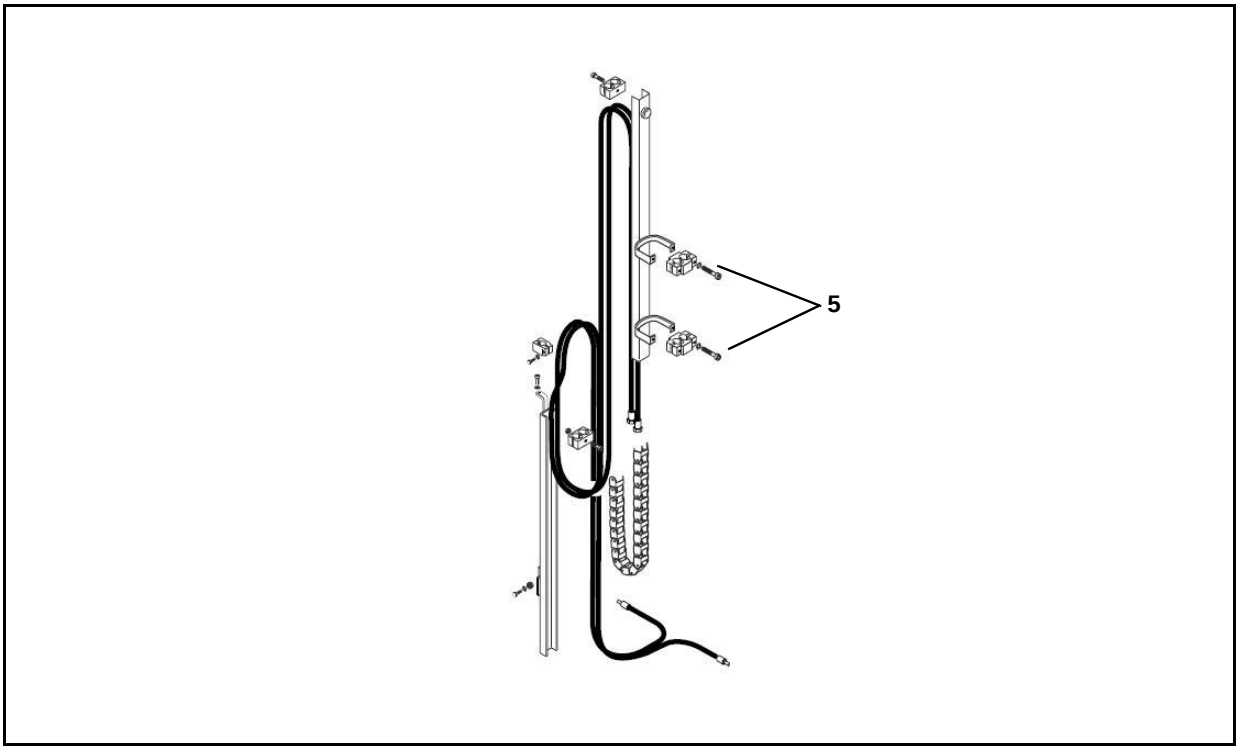

Removal procedure

1. Tilt the mast forwards and lock the mobile mast and carriage using appropriately sized and protected eye bolts and belts
2. Lower the mast to prevent the supply pipes from remaining in tension
3. Loosen the pulley fixing screws
4. Remove the support
5. Remove the terminals **[Point 1]**
6. Position a container to collect the oil
7. Remove the pipes **[Point 2]**

Installation procedure

The reassembly procedure is the reverse of the disassembly procedure.

Point Operation

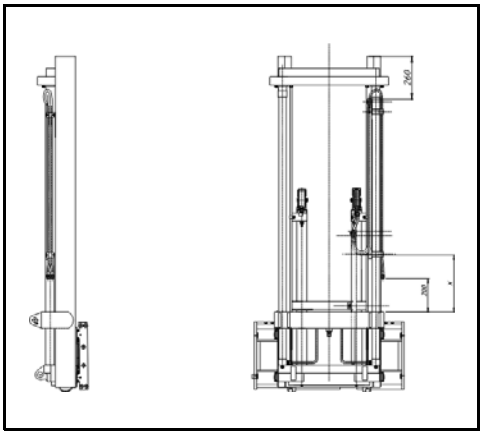

[Point 1]
Installation:

X = 245 mm (mast height = 2905);
X = 270 mm (mast height = 3005);
X = 315 mm (mast height = 3205);
X = 345 mm (mast height = 3305);
X = 395 mm (mast height = 3505);
X = 440 mm (mast height = 3705);
X = 520 mm (mast height = 4005)

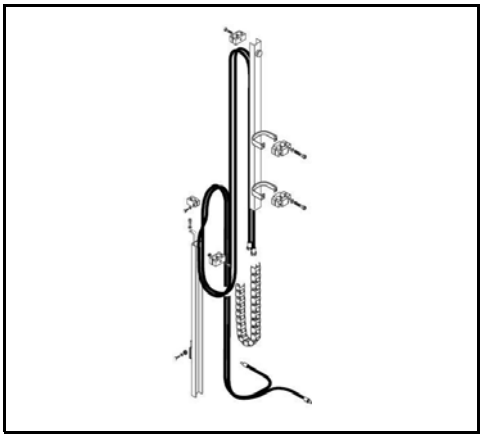

[Point 2]
Installation:

Prevent the pipes from rotating on their axis when raising/lowering

Important:
Prevent any pipes kept under pressure from causing a hazard during raising/lowering

THIRD WAY SYSTEM (CHAINS) - MAST 2M FFL

REMOVAL • INSTALLATION

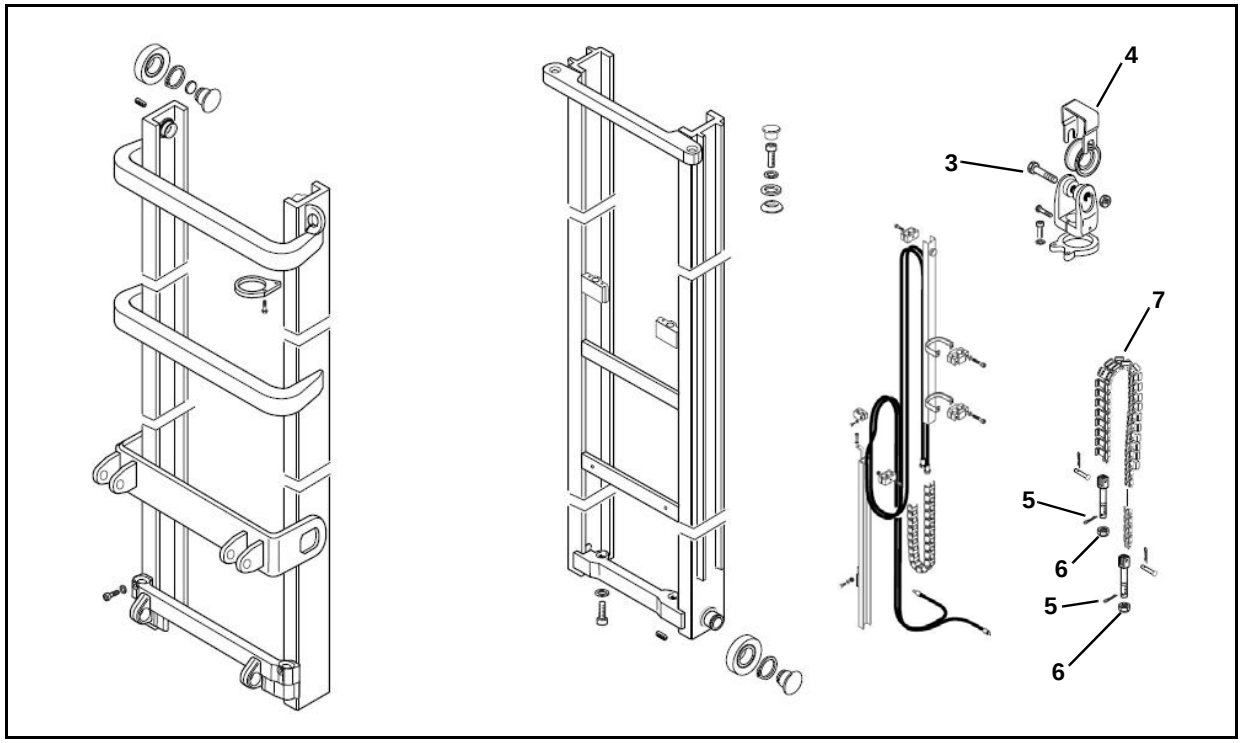

Removal procedure

1. Tilt the mast forwards and lock the mobile mast and carriage using appropriately sized and protected eye bolts and belts
2. Lower the mast to prevent the supply pipes from remaining in tension
3. Loosen the pulley fixing screws
4. Remove the support
5. Remove the split pin **[Point 1]**
6. Remove the nut
7. Remove the chain **[Point 2]**

Installation procedure

The reassembly procedure is the reverse of the disassembly procedure.

Remarks:
Install new split pins

Point Operation

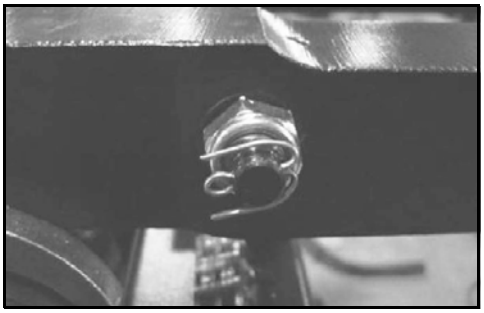

[Point 1]
Disassembly:
Straighten the fins

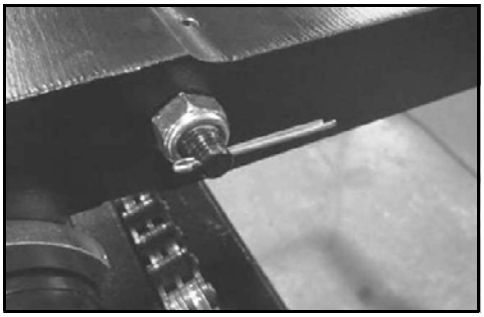

Disassembly:
Slide out the split pin

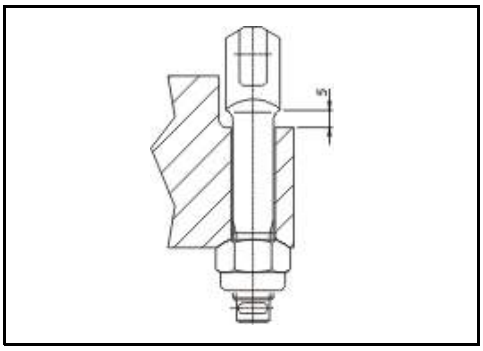

[Point 2]
Installation:
Comply with the minimum sizing indicated in the figure to the side (image refers to primary cylinder)

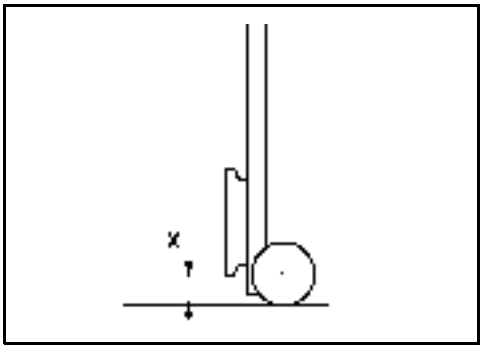

Inspection:
Remove the forks and check that the X height complies with the **ISO** tables shown in the MAST CHAINS section; if not, turn the tension rods on the carriage, and if required those on the primary cylinders.
Check that there is no interference with the limit switch when the mast is at maximum height

PRIMARY CYLINDER SUPPLY PIPES - MAST 3M FFL

REMOVAL • INSTALLATION

T=N·m

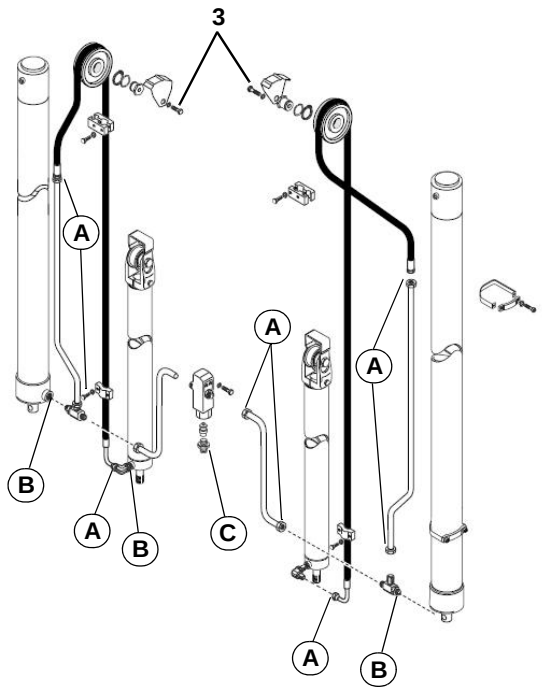

A = 55 ± 5 Nm
B = 75 ± 5 Nm
C = 100 Nm

Removal procedure

1. Tilt the mast forwards and lock the mobile mast and carriage using appropriately sized and protected eye bolts and belts
2. Lower the mast to prevent the supply pipes from remaining in tension
3. Remove the pulley fixing screws
4. Remove the third way supply pulley, including the pin and the fixing ring
5. Remove the terminals **[Point 1]**
6. Position a container to collect the oil
7. Remove the pipes **[Point 2]**

Installation procedure

The reassembly procedure is the reverse of the disassembly procedure.

Remarks:
Fix both ends of the rigid pipe before tightening

Point Operation

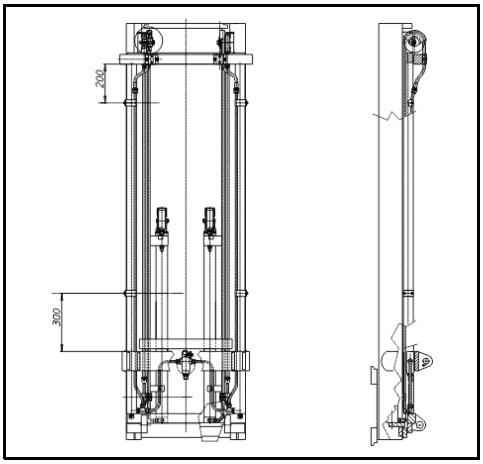

[Point 1]
Disassembly:
Comply with the sizing indicated in the figure to the side

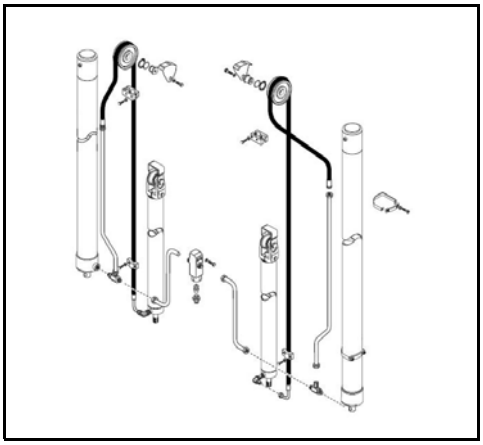

Disassembly:
Prevent the pipes from rotating on their axis when raising/lowering

Important:
Prevent any pipes kept under pressure from causing a hazard during raising/lowering

SECONDARY CYLINDER SUPPLY PIPES - MAST 3M FFL

REMOVAL • INSTALLATION

T=N·m

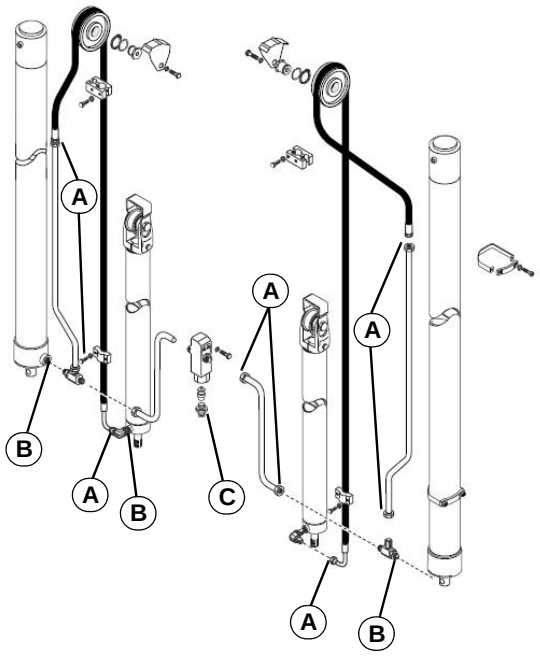

A = 55 ± 5 Nm
B = 75 ± 5 Nm
C = 100 Nm

Removal procedure

1. Tilt the mast forwards and lock the mobile mast and carriage using appropriately sized and protected eye bolts and belts
2. Lower the mast to prevent the supply pipes from remaining in tension
3. Position a container to collect the oil
4. Remove the pipes

Installation procedure

The reassembly procedure is the reverse of the disassembly procedure.

Remarks:
Fix both ends of the rigid pipe before tightening

THIRD WAY SYSTEM (SUPPLY PIPES) - MAST 3M FFL

REMOVAL • INSTALLATION

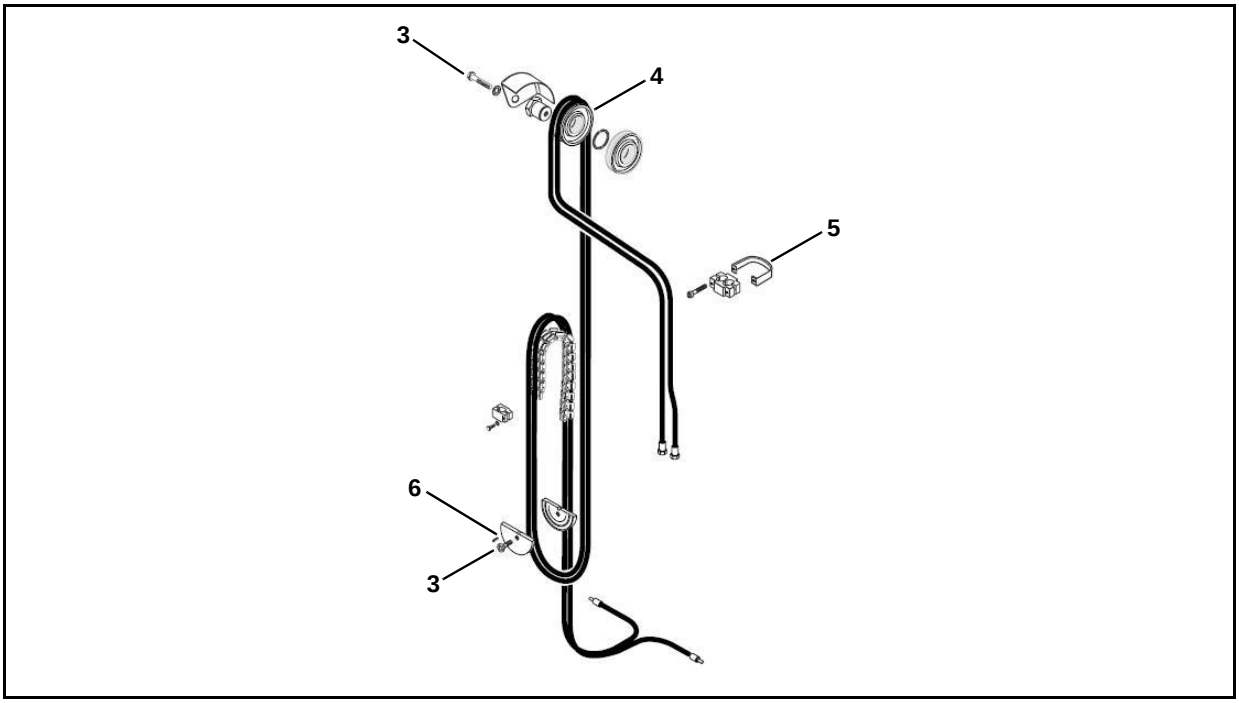

Removal procedure

1. Tilt the mast forwards and lock the mobile mast and carriage using appropriately sized and protected eye bolts and belts
2. Lower the mast to prevent the supply pipes from remaining in tension
3. Remove the pulley fixing screws
4. Remove the third way supply pulley, including the pin and the fixing ring
5. Remove the terminals **[Point 1]**
6. Remove the plug
7. Position a container to collect the oil
8. Remove the pipes **[Point 2]**

Installation procedure

The reassembly procedure is the reverse of the disassembly procedure.

Remarks:
Install a new plug

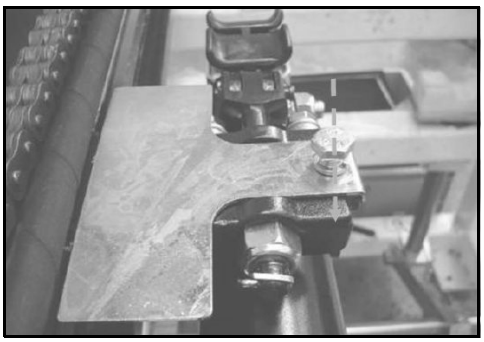

Protecting the supply pipe (primary cylinder) without a third or fourth way system.

Point Operation

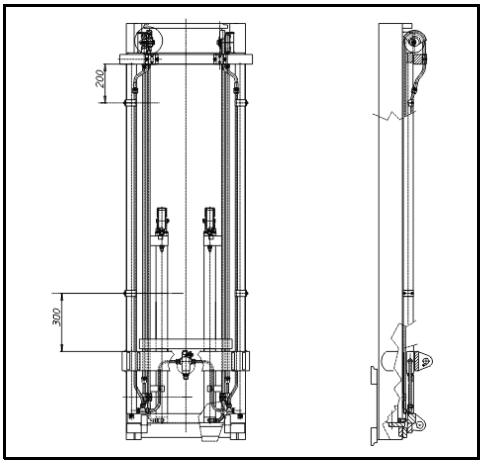

[Point 1]
Installation:
Comply with the sizing indicated in the figure to the side

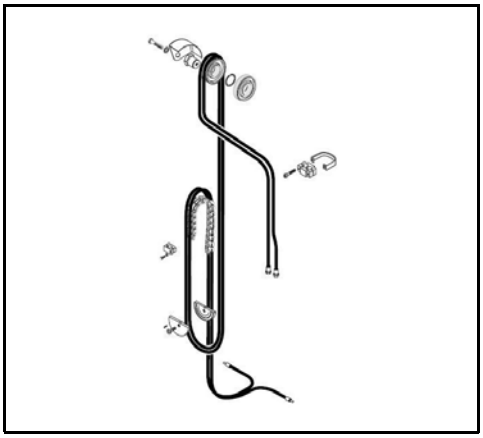

[Point 2]
Installation:
Prevent the pipes from rotating on their axis when raising/lowering

Important:
Prevent any pipes kept under pressure from causing a hazard during raising/lowering

THIRD WAY SYSTEM (PULLEYS) - MAST 3M FFL

REMOVAL • INSTALLATION

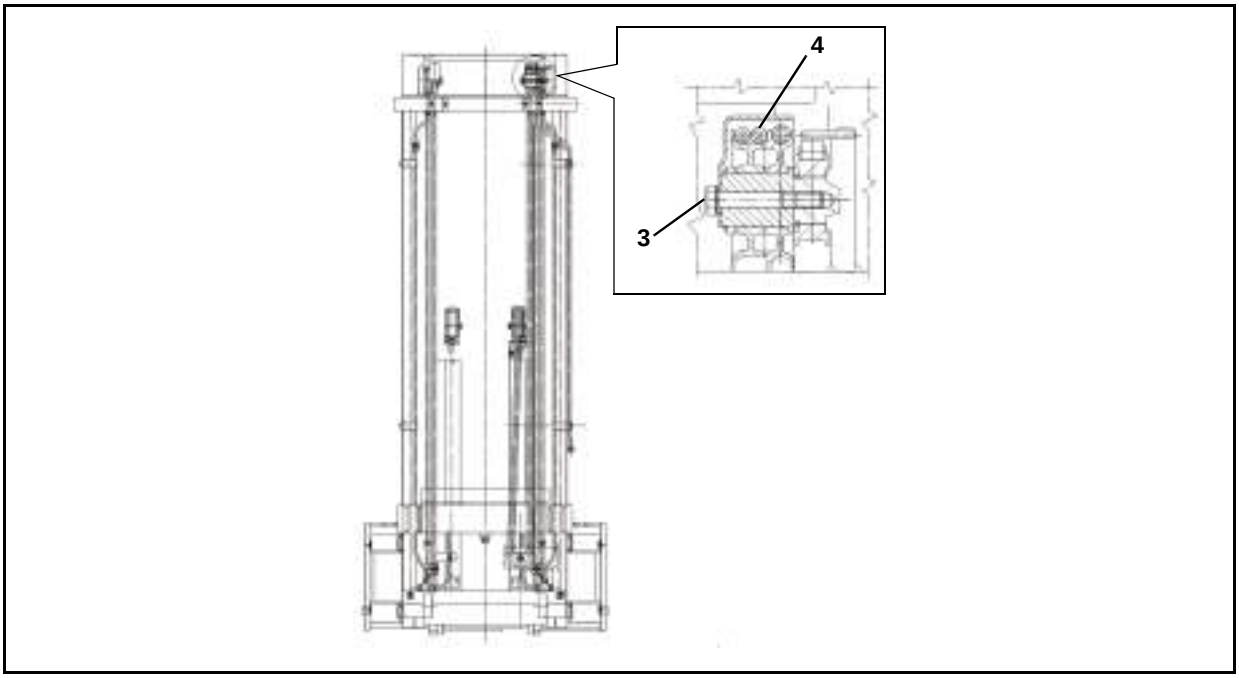

Removal procedure

1. Tilt the mast forwards and lock the mobile mast and carriage using appropriately sized and protected eye bolts and belts
2. Lower the mast to prevent the supply pipes from remaining in tension
3. Remove the pulley fixing screws
4. Remove the third way supply pulley, including the pin and the fixing ring **[Point 1]**
5. Remove the plug **[Point 2]**
6. Remove the chain pulley **[Point 3]**

Installation procedure

The reassembly procedure is the reverse of the disassembly procedure.

Remarks:

- **Lubricate the pin with MP grease before coupling to the pulley**
- **Install a new plug**

Point Operation

[Point 1]
Disassembly:
Remove the elastic ring.

Inspection:
Check that the step side is the same as the seeger hollow

[Point 2]
Installation:
Replace the component

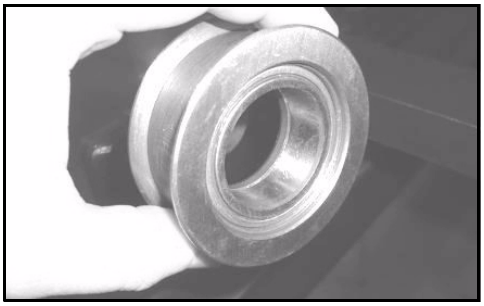

[Point 3]
Installation:
Fix the pulley to the pin

Installation:
Use a brass inserter of a suitable diameter

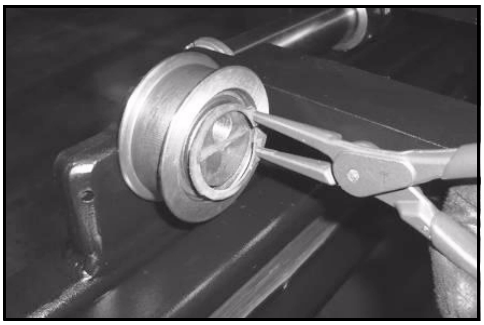

Installation:
Install a seeger

THIRD WAY SYSTEM (CHAINS) - MAST 3M FFL

REMOVAL • INSTALLATION

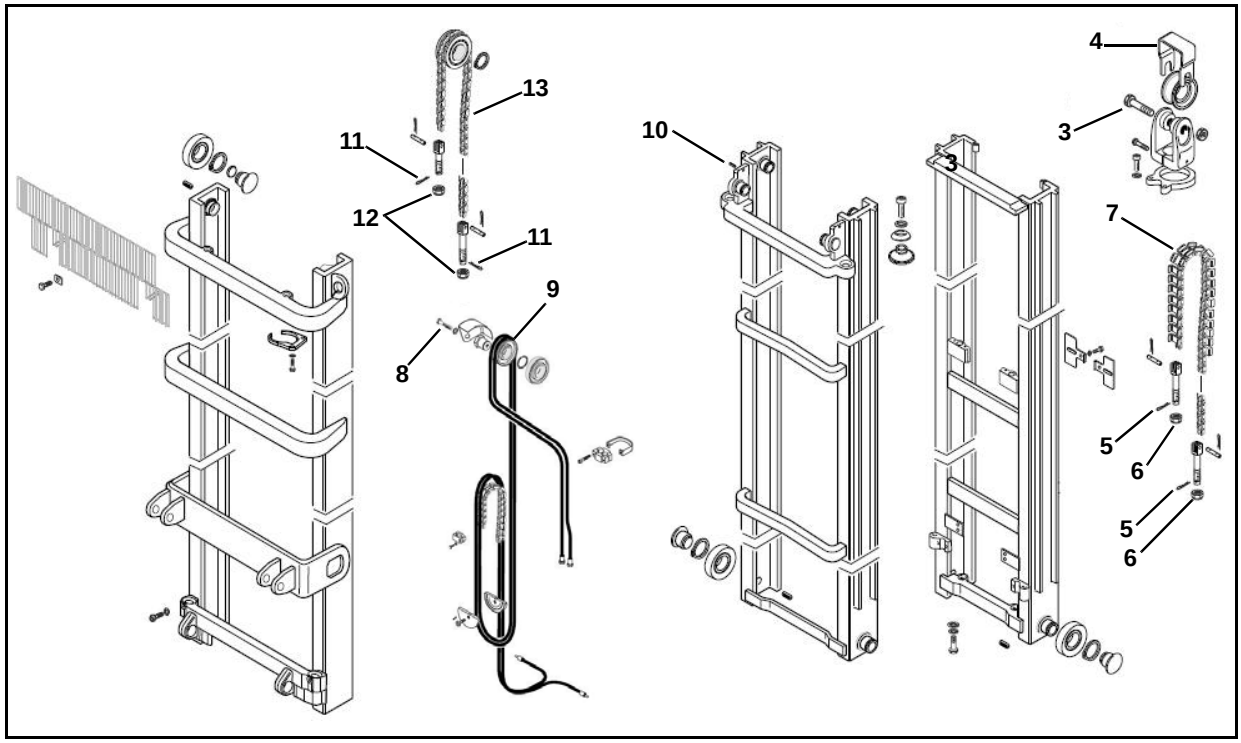

Removal procedure

1. Tilt the mast forwards and lock the mobile mast and carriage using appropriately sized and protected eye bolts and belts
2. Lower the mast to prevent the supply pipes from remaining in tension
3. Loosen the pulley fixing screws
4. Remove the support
5. Remove the split pin **[Point 1]**
6. Remove the nut
7. Remove the chain **[Point 2]**
8. Remove the pulley fixing screws
9. Remove the third way supply pulley, including the pin and the fixing ring **[Point 3]**
10. Remove the plug **[Point 4]**
11. Remove the split pin **[Point 5]**
12. Remove the nut
13. Remove the chain **[Point 6]**

Installation procedure

The reassembly procedure is the reverse of the disassembly procedure.

Remarks:

- **Install new split pins**
- **Install a new plug**

Point Operation

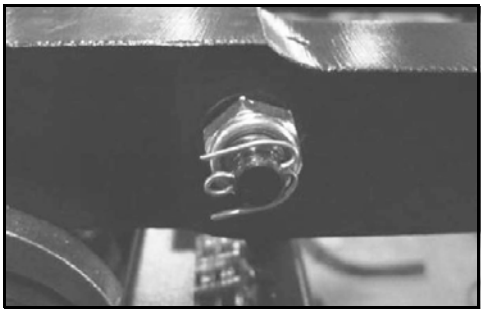

[Point 1]
Disassembly:
Straighten the fins

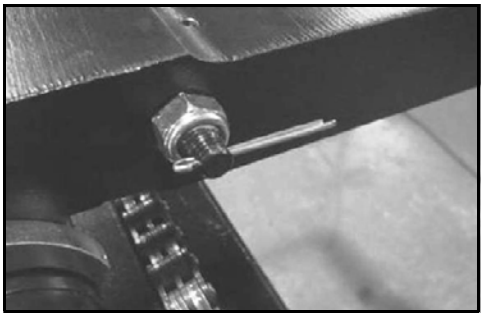

Disassembly:
Slide out the split pin

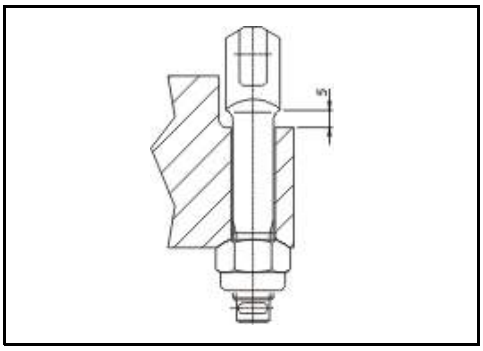

[Point 2]
Installation:
Comply with the sizing indicated in the figure to the side (image refers to fixed mast)

Chain must be tensioned with the mobile mast open from the fixed mast by 5 mm (check that there is no interference on the limit switch when the mast is at maximum height)

[Point 3]
Disassembly:
Remove the elastic ring

Inspection:
Check that the step side is the same as the seeger hollow

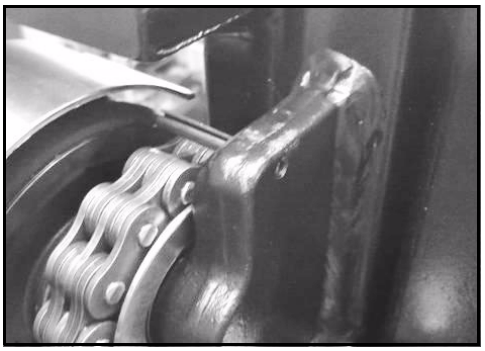

[Point 4]
Installation:
Replace the component

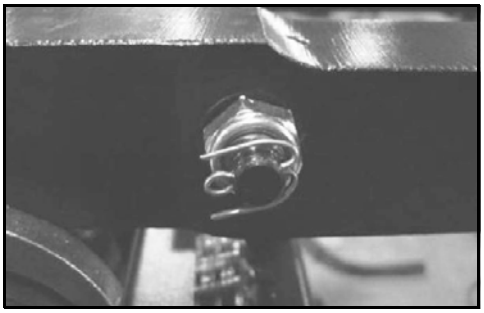

[Point 5]
Disassembly:
Straighten the fins

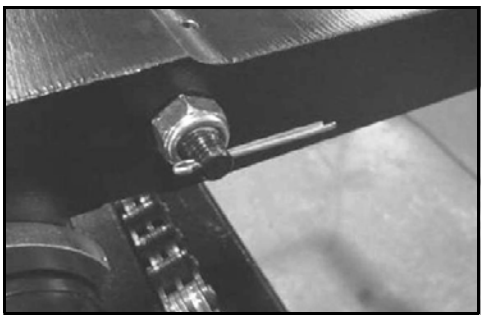

Disassembly:
Slide out the split pin

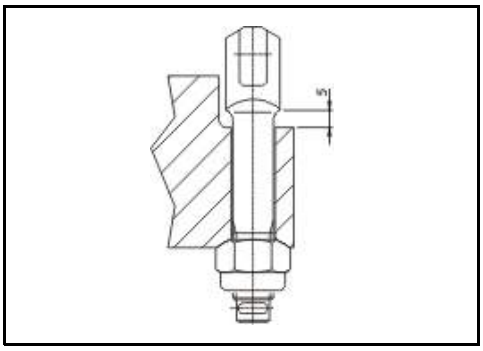

[Point 6]

Installation:

Comply with the minimum sizing indicated in the figure to the side (image refers to primary cylinder)

Chain must be tensioned with the mobile mast open from the fixed mast by 5 mm (check that there is no interference on the limit switch when the mast is at maximum height)

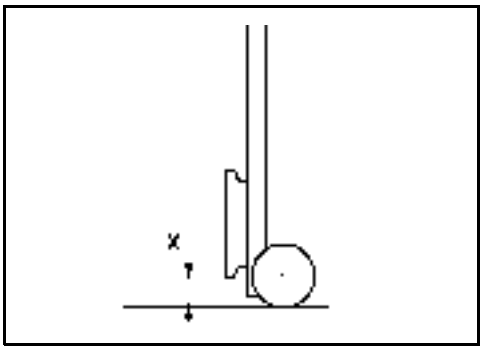

Inspection:

Remove the forks and check that the X height complies with the **ISO** tables shown in the MAST CHAINS section; if not, turn the tension rods on the carriage, and if required those on the primary cylinders.
Check that there is no interference with the limit switch when the mast is at maximum height

ROLLER PAD

INSPECTIONS • ADJUSTMENTS

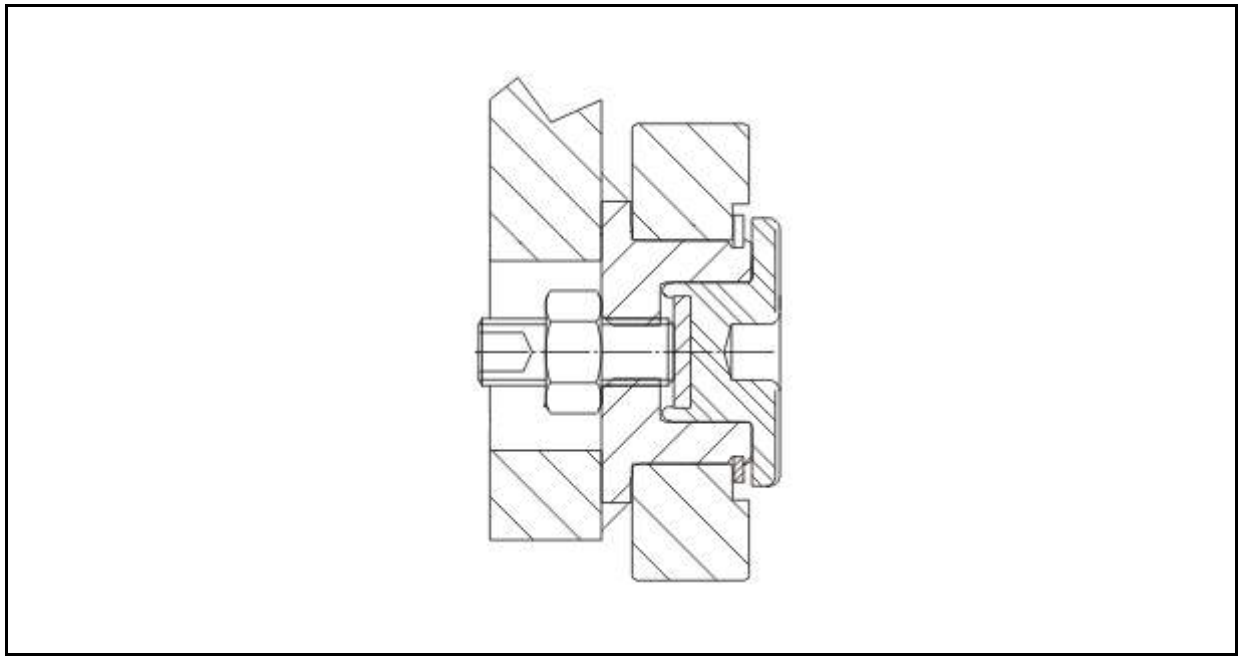

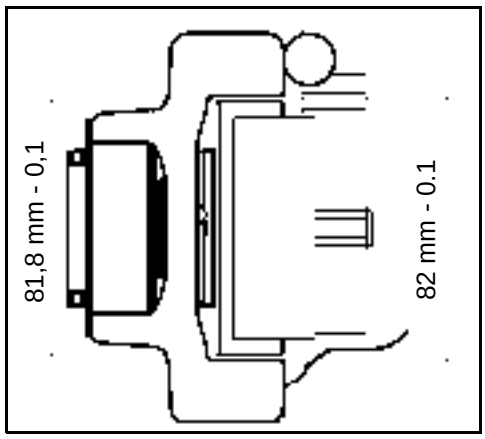

Long life roller bearing:

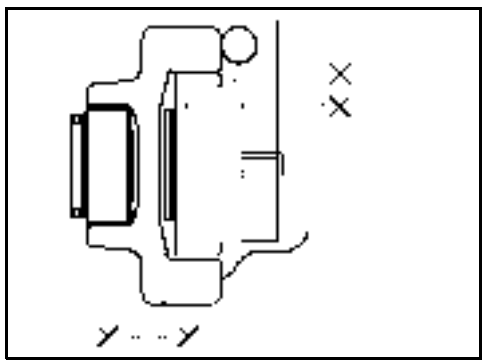

Check:

The clearance between roller pad and inner mast profile **Y.**

Standard clearance: 0.2 - 0.4 mm

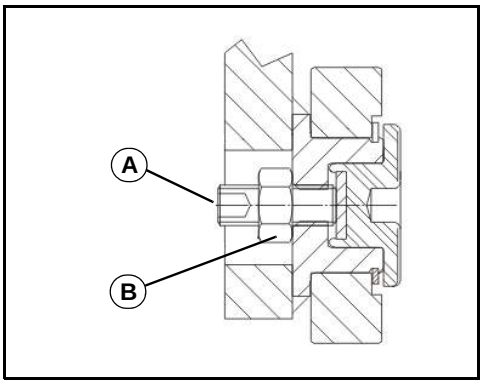

Adjustment:

Adjust by turning the regulating screw **(A)** shown in the image and lock in place with the nut **(B)**

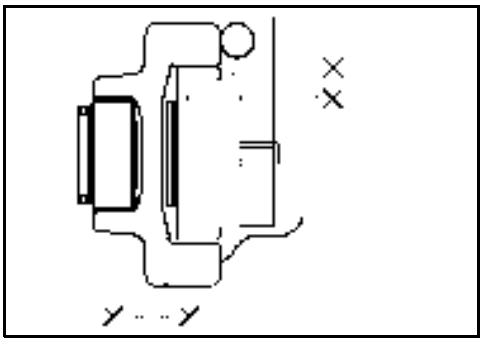

Check:

The clearance (X) between roller pad and inner mast profile.
Standard clearance: X = 0.2 - 0.4 mm

Adjustment:

It is not possible to adjust this clearance (X = 0.2 - 0.4mm). In order to have the correct clearance it is necessary to replace the roller

MOBILE MAST PAD 2M TV (4705 ÷ 5005 mm)

INSPECTIONS • ADJUSTMENTS

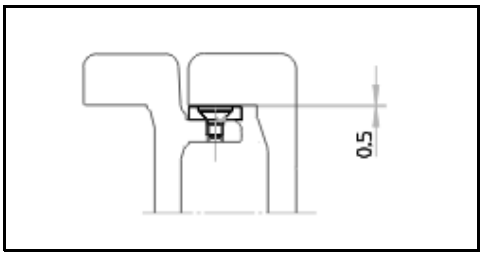

Check:

Maximum clearance (0.5 mm);
if the clearance is greater, replace the pad (cannot be shimmed)

Inspection:

When the total thickness is less than 3.8 mm, replace the pad;
when replacement is required, replace both (never just one); do not shim

MAST CHAINS

INSPECTION • ADJUSTMENT

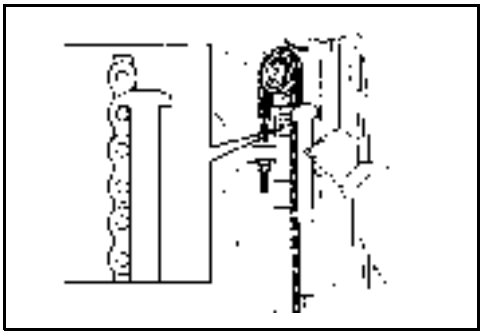

Inspection:

1. To check if the chain links are worn out, follow the appropriate rules:
   SST 09631 - 22000 - 71

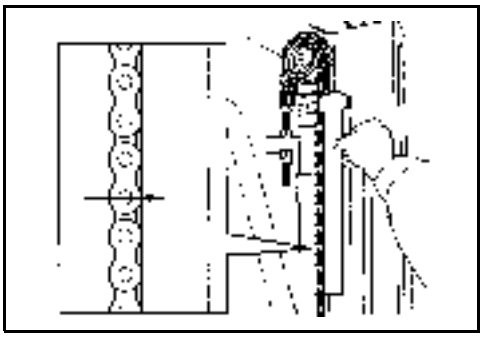

2. The chains must be replaced when, in a portion correspondig to 34 pitches, only 33 pitches are found

Note:

Perform measurement without removing the chain from the vehicle. Inspect elongation over the entire chain length as it may be localized.

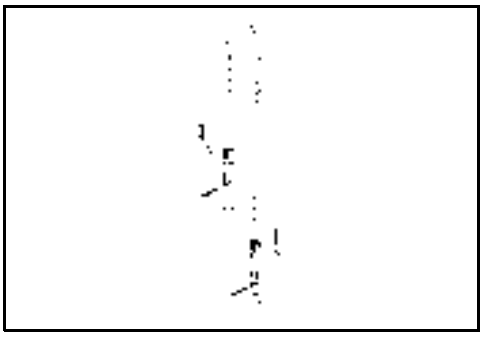

Adjustment:

(1)Park the vehicle on a flat surface and set the mast in vertical position
(2)Remove the forks

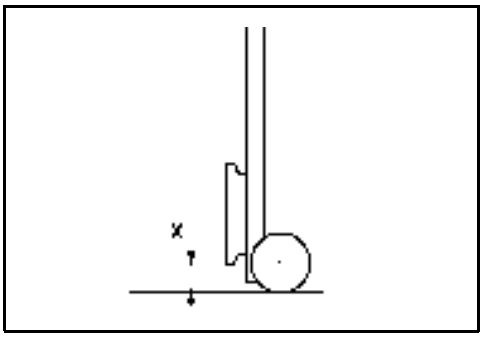

(3)Check if the measure **X** is respected according to the following **ISO** tables
(4)Adjust to eliminate any chain sag by turning the adjusting nylon nut
(5)Check to see if the chain tension is equal on left and right sides
(6)Check that the chains are not twisted
(7)Check that the lifting higher meets the standard
(8)In the upper position, check that the end stroke plate is not in contact with the fork carriage

TABLE ISO 2328 - 1993		
Class	Lifting load (kg)	"X" (± 5)
I A	0 ÷ 999	76 mm
II A	1000 ÷ 2500	76 mm
III A	2500 ÷ 4999	76 mm
IV A	5000 ÷ 8000	127 mm
V A	8001 ÷ 10999	127 mm
Class	Lifting load (kg)	"X" (± 5)
I B	0 ÷ 999	114 mm
II B	1000 ÷ 2500	152 mm
III B	2500 ÷ 4999	203 mm
IV B	5000 ÷ 8000	254 mm
V B	8001 ÷ 10999	257 mm

FORK

REMOVAL • INSPECTION

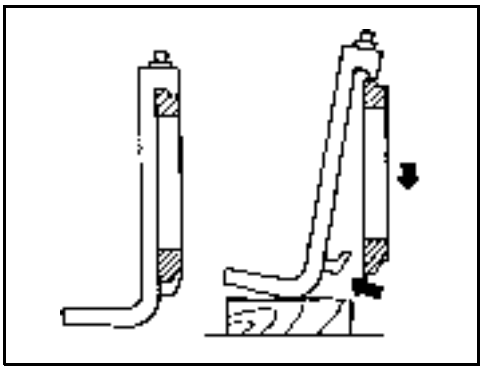

Disassembly:

1. Lift the fork to approx. 20 cm from the ground
2. Place a wood block under the notched section of the fork rail
3. Unlock the fork by lifting the fork stopper pin and shift one fork per time to the fork carriage bottom notch
4. Slowly lower the fork for removal

Installation:

The reassembly procedure is the reverse of the disassembly procedure.

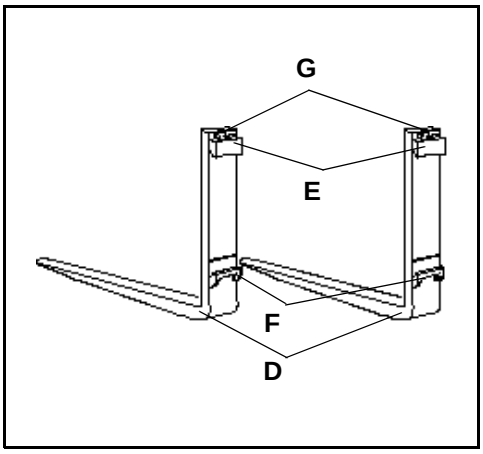

Inspection:

Fork arm inspection must be carried out carefully by trained personnel to detect any damage, failure, deformation, etc., which may impair safe use

(1)Surface cracks:

The fork arm must be thoroughly examined visually or cracks giving special attention to the heel **(D)** and top **(E)** and bottom **(F)** hooks.
If necessary, the forks may be subjected to a non-destructive crack detection process.

(2)Difference in height of fork tips:

Check the difference in height between the tips on each pair of forks; this must not be more than 3% of the thickness of the forks fitted on the fork plate

(3)Positioning lock:

check that the fork positioning lock **(G)** is in good working order

(4)Legibility of marking:

if the fork arm marking is not clearly readable, it must be renewed by the original fork supplier

(5)Fork wear control:

the fork arm blade and shank must be thoroughly checked for wear, paying special attention to the area around the heel **(D)**. The forks must be replaced when the wear has reduced the thickness by 10% compared to the original

(6)Fork mounting wear control:

the horizontal supporting surface of the top hook **(E)** and the contact surfaces of both hooks **(E)** and **(F)** must be checked for wear and any damage

(7)Withdrawal of the forks from service:

any fork with defects revealed during the above controls must be withdrawn from service

Remarks:
Tampering with any component or the system can endanger vehicle safety
All repairs and replacements must be done by appropriately trained and authorized staff.

CYLINDER

Page

LIFTING CYLINDERS 12-2
GENERAL 12-2
CYLINDER SPECIFICATIONS 12-3
COMPONENTS 12-4
SIDE / REAR CYLINDER 12-7
SIDE CYLINDER GASKETS (2M TV) 12-10
SIDE CYLINDER GASKETS (3M TV) 12-15
SIDE CYLINDER GASKETS (2M FFL) 12-20
SIDE CYLINDER GASKETS (3M FFL) 12-28
CENTRAL CYLINDERS 12-34
CENTRAL CYLINDER GASKETS (2M FFL & 3M FFL) 12-36
LOWERING VALVE 12-42
SPECIFICATIONS 12-42
MAST PERFORMANCE TABLE 12-43
TILTING CYLINDERS 12-45
GENERAL 12-45
SPECIFICATIONS 12-45
COMPONENTS 12-45
TILT CYLINDER GASKETS 12-48

LIFTING CYLINDERS

GENERAL

1.0-1.5t	CENTRAL CYLINDERS	SIDE / REAR CYLINDER
2M TV (V)	/	STANDARD 2 displacement cylinders without braking effect 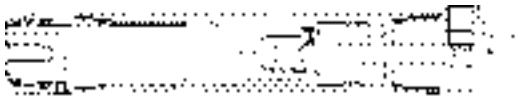 OPTIONAL 2 displacement cylinders with braking effect on lowering
3M TV (/)	/	STANDARD 2 displacement cylinders without braking effect
2M FFL (FW)	STANDARD 2 displacement cylinders with braking effect on lifting 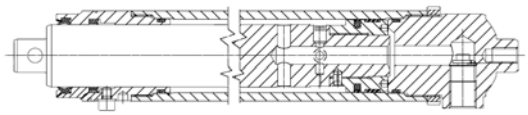 OPTIONAL 2 displacement cylinders with braking effect on lifting & lowering 	STANDARD 2 displacement cylinders with braking effect on lowering
3M FFL (FSW)	STANDARD 2 displacement cylinders with braking effect on lifting 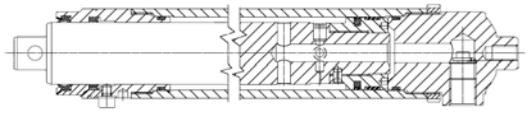 OPTIONAL 2 displacement cylinders with braking effect on lifting & lowering 	STANDARD 2 displacement cylinders with braking effect on lowering

CYLINDER SPECIFICATIONS

SIDE / REAR LIFTING CYLINDERS (2M TV & 3M TV)

Item \ Model		1.0 t	1.25 t	1.5 t
Cylinder model		Simple effect		
Cylinder bore	mm	42	←	←
Piston outside diameter	mm	36	←	←
Parachute valve		s = 1	←	←
Opening		ø = 0.6	←	←

SIDE / REAR LIFTING CYLINDERS (3M TV)

Item \ Model		1.0 t	1.25 t	1.5 t
Cylinder model		Simple effect		
Cylinder bore	mm	45	←	←
Piston outside diameter	mm	38	←	←
Parachute valve		s = 1.5	←	←
Opening		ø = 0.6	←	←

CENTRAL LIFTING CYLINDERS (2M TV & 3M TV)

Item \ Model		1.0 t	1.25 t	1.5 t
Cylinder model		Simple effect		
Cylinder bore	mm	45	←	←
Piston outside diameter	mm	38	←	←
Parachute valve		s = 1.2	←	←
Opening		ø = 0.6	←	←

SIDE / REAR LIFTING CYLINDER (2M FFL)

Item \ Model		1.0 t	1.25 t	1.5 t
Cylinder model		Simple effect		
Cylinder bore	mm	35	←	←
Piston outside diameter	mm	25	←	←
Parachute valve		s = 1.5	←	←
Opening		ø = 0.6	←	←

COMPONENTS

LIFTING CYLINDER (2M TV)

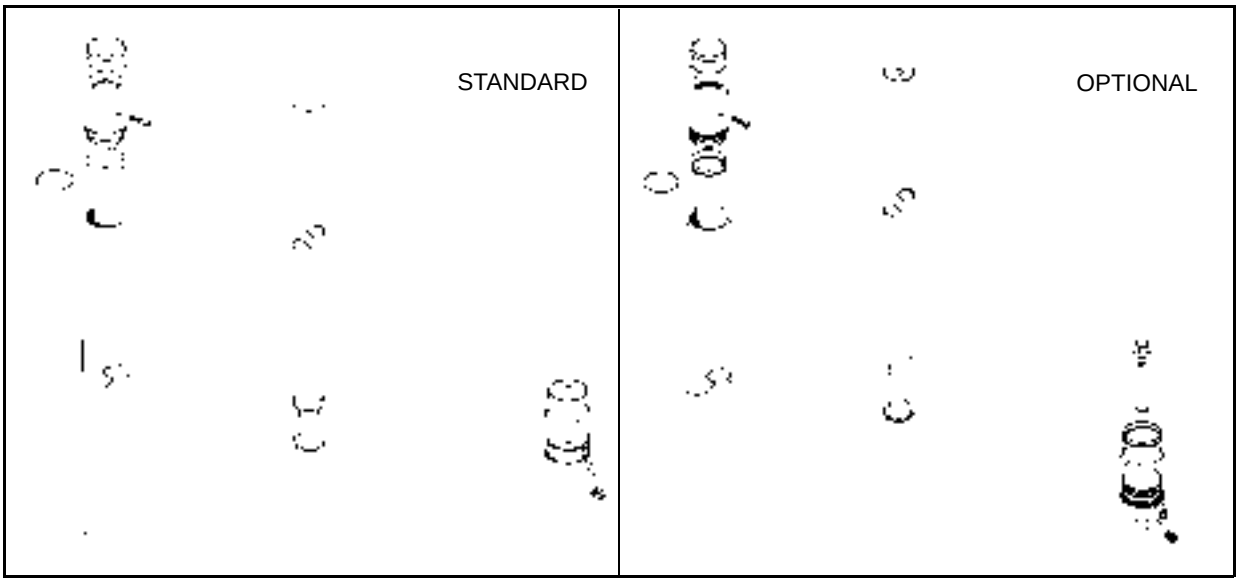

SIDE LIFTING CYLINDERS (3M TV)

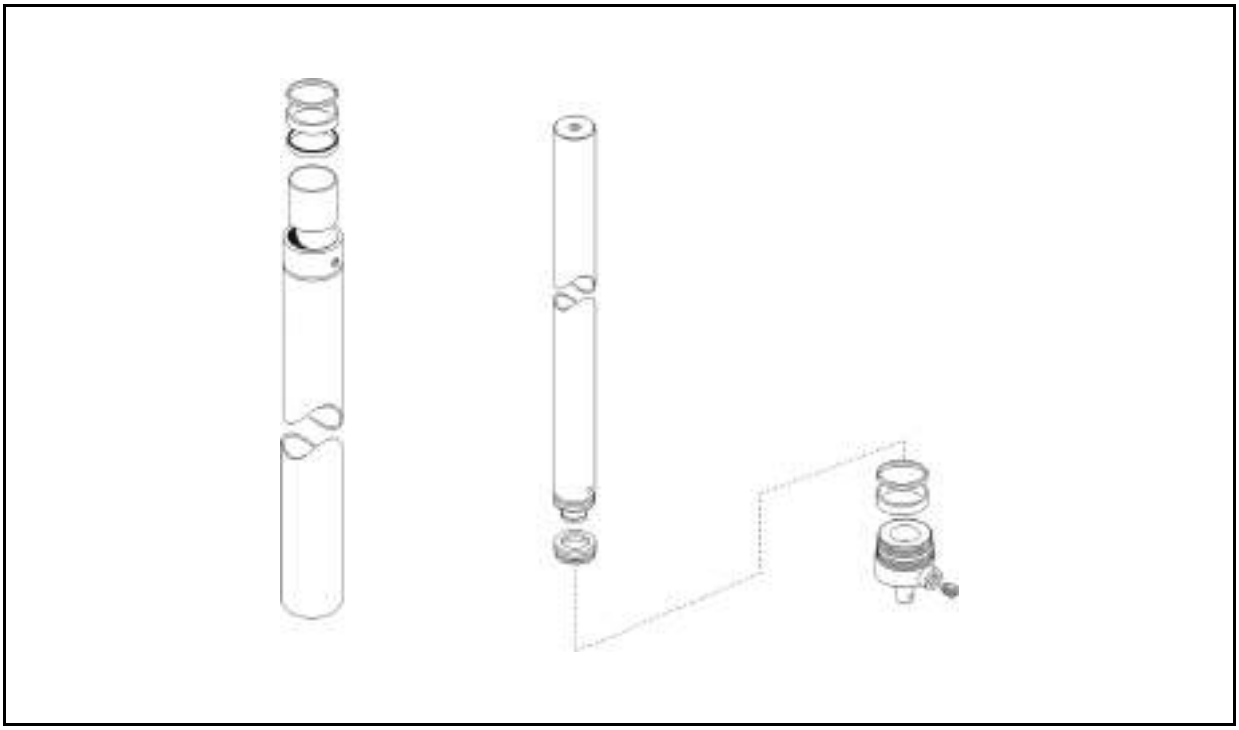

SIDE / REAR LIFTING CYLINDER (2M FFL)

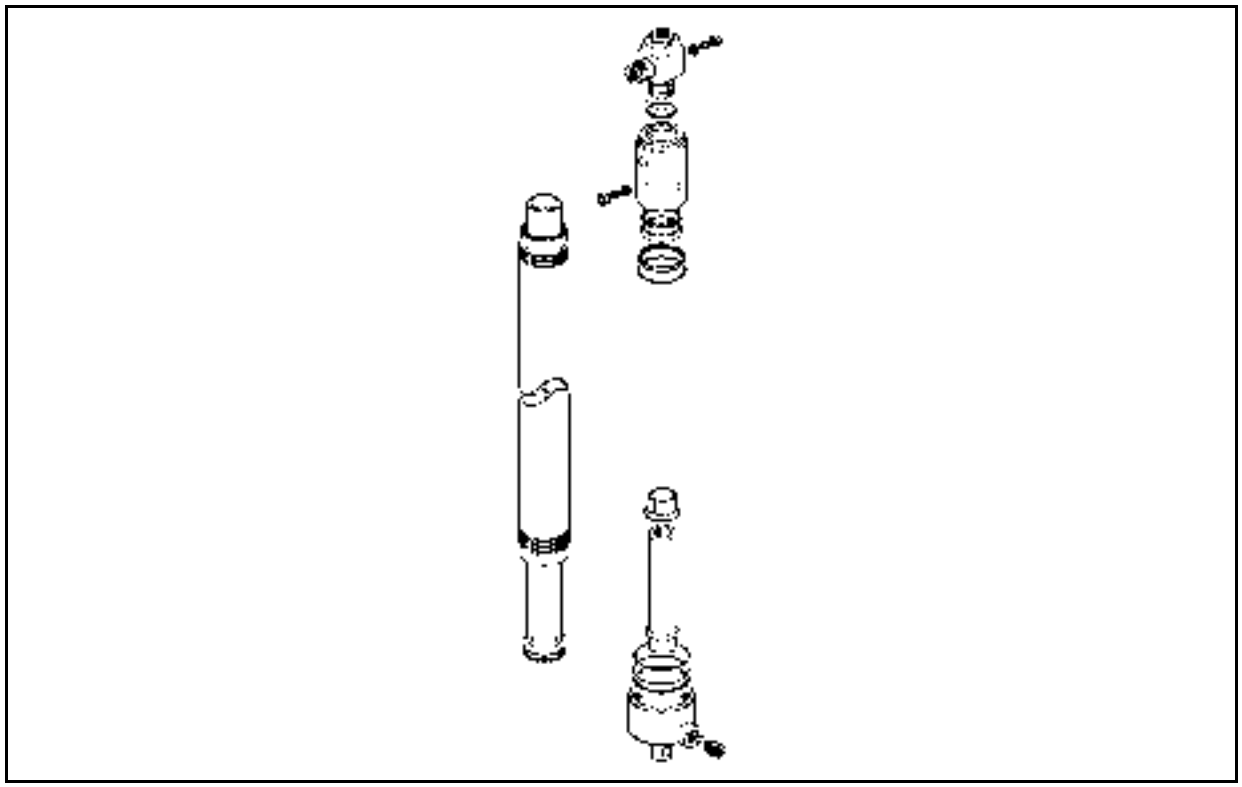

SIDE / REAR LIFTING CYLINDER (3M FFL)

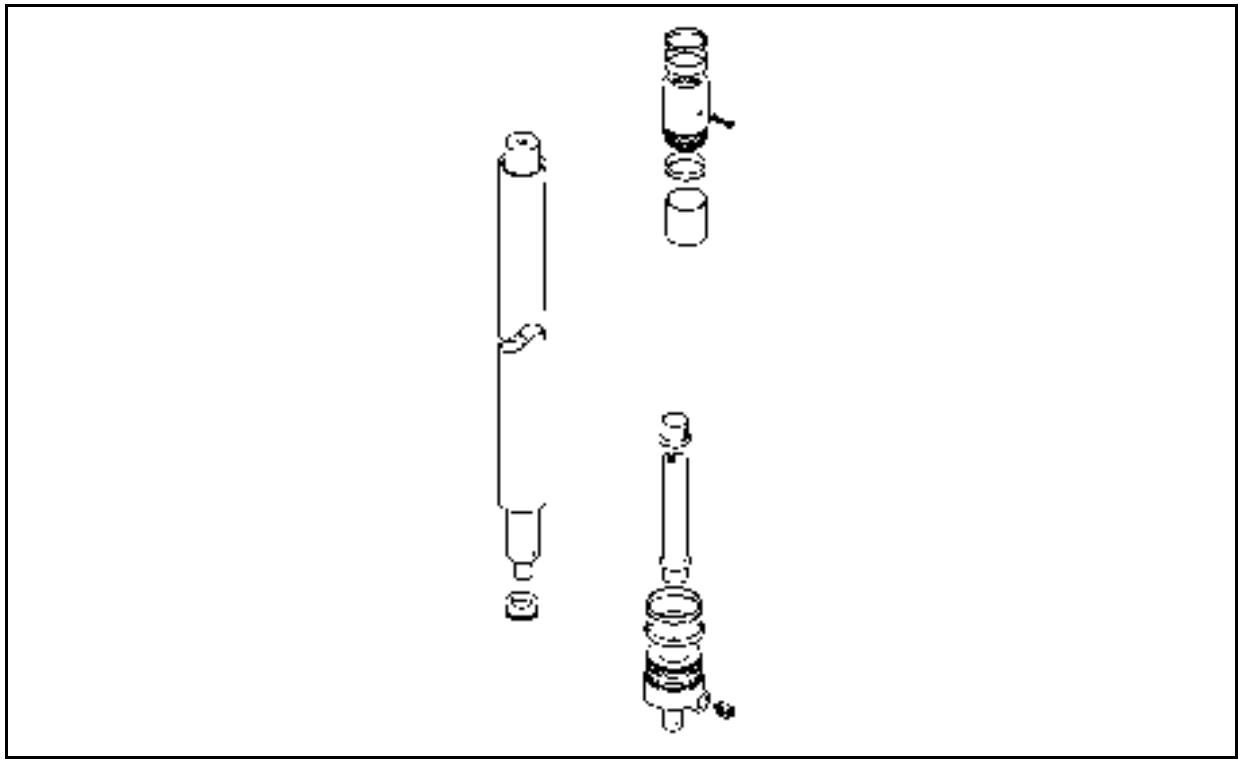

CENTRAL CYLINDERS (2M FFL & 3M FFL)

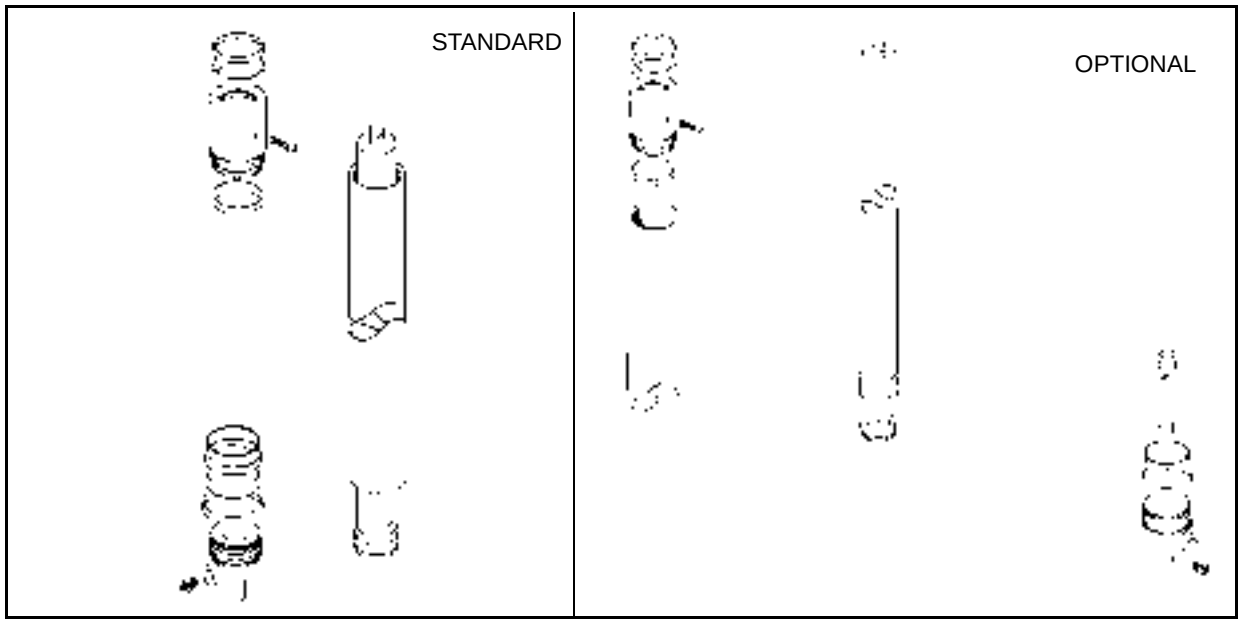

SIDE / REAR CYLINDER

REMOVAL • INSTALLATION

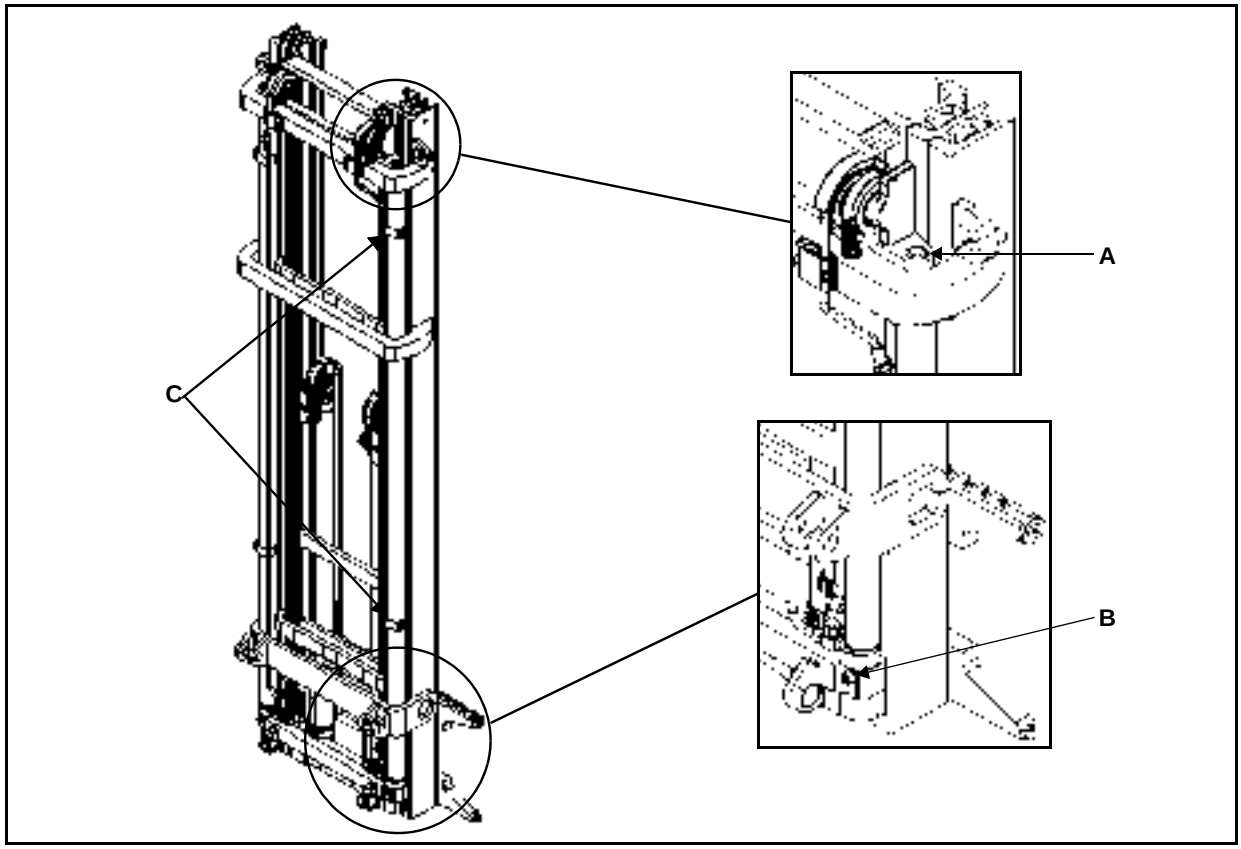

Removal procedure

1. Set the mast in the vertical position and fully lower the forks
2. Hook on an appropriately sized and protected belt and eye bolt
3. Disconnect the battery connector
4. Disconnect the cylinder pipes and the pipe clips **C [Point 1]**
5. Remove the upper fixing bolt **A** and the lower fixing bolt **B [Point 2]**
6. Remove the fixing collars
7. Lift the mast in order to release the cylinders
8. Extract the cylinders from the mast

Installation procedure

The reassembly procedure is the reverse of the disassembly procedure.

Remarks:
After installing the lift cylinders, follow the steps below:

1. **Without load repeat full stroke lifting and lowering of the cylinder to bleed air and check normal functioning**
2. **Check the hydraulic oil level and add if insufficient**
3. **Inspect lifting cylinders for uneven lifting, and make any necessary adjustment**

Point Operation

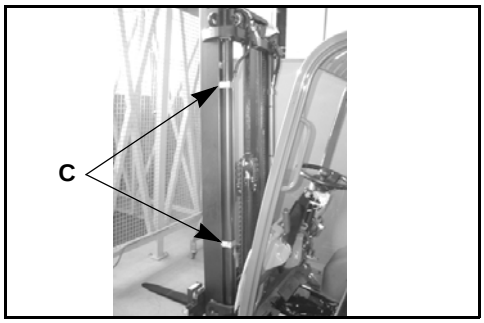

[Point 1]
Disassembly:
Remove the pipe-hose clips **C**

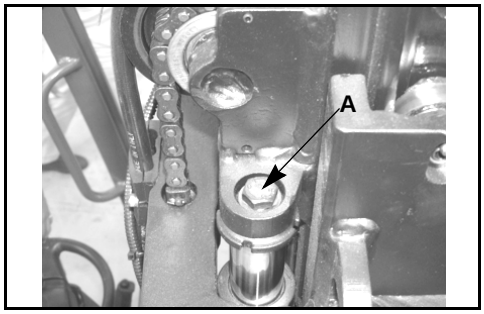

[Point 2]
Disassembly:
Remove the upper fixing bolt **A**

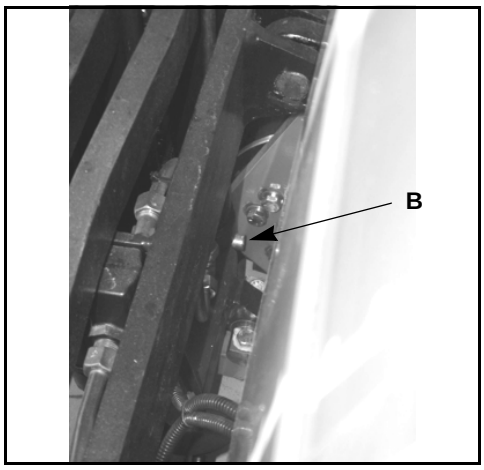

Disassembly:
Remove the bottom fixing bolts **B**

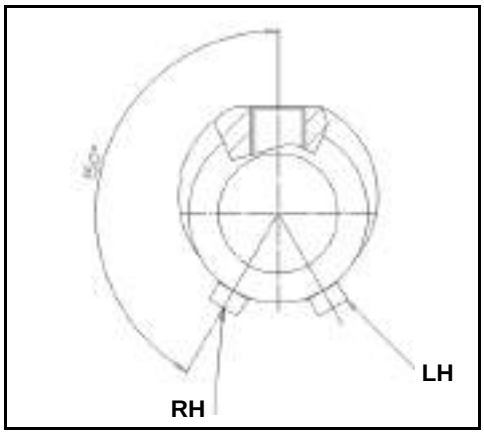

Installation 2M TV:
Respect the orientation between holes G3/8 and M6
RH = right cylinder
LH = left cylinder

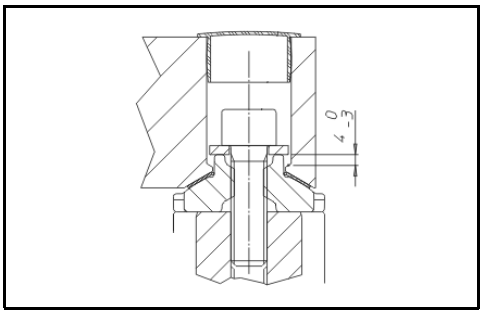

Installation 2M TV:

After installation, perform adjustment if necessary in order to have following clearance of the upper fixing bolts of the cylinders.
clearance = 4 (0 / -0.3) mm

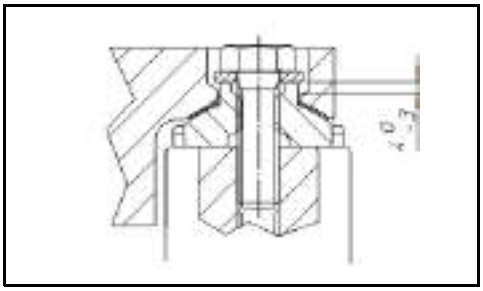

Installation 3M TV:

After installation, perform adjustment if necessary in order to have following clearance of the upper fixing bolts of the cylinders.
clearance = 4 (0 / -0.3) mm

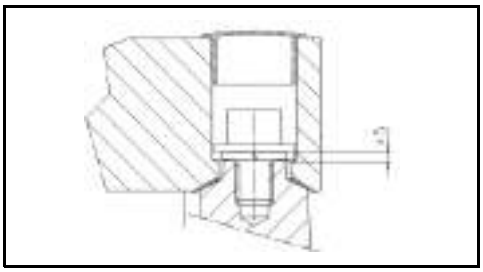

Installation 2M FFL:

After installation, perform adjustment if necessary in order to have following clearance of the upper fixing bolts of the cylinders.
clearance = 4 (0 / -0.3) mm

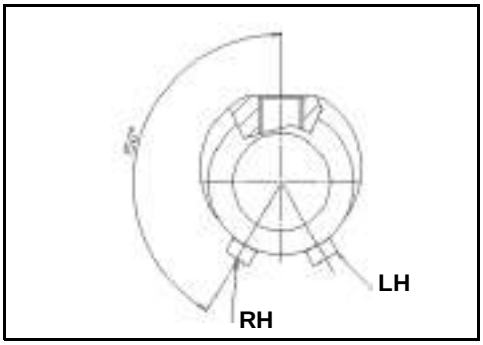

Installation 3M FFL:

Respect the orientation between holes G3/8 and M6
RH = right cylinder
LH = left cylinder

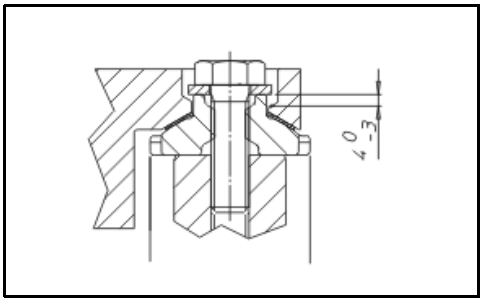

Installation 3M FFL:

After installation, perform adjustment if necessary in order to have following clearance of the upper fixing bolts of the cylinders.
clearance = 4 (0 / -0.3) mm

SIDE CYLINDER GASKETS (2M TV)

DISASSEMBLY • INSPECTION • REASSEMBLY

Tightening torque T=Nm

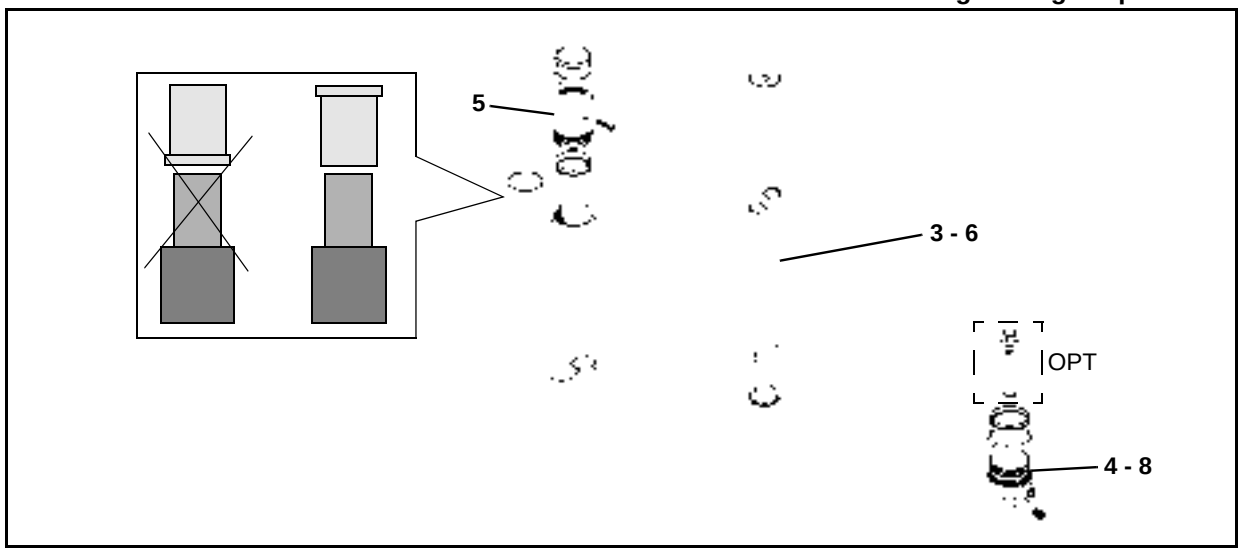

Removal procedure

1. Lock the cylinder in a vice **[Point 1]**
2. Position a container to collect the oil
3. Remove the piston rod **[Point 2]**
4. Lock the bottom **[Point 3]**
5. Remove the bushing from the cylinder (upper side) **[Point 4]**
6. Remove the piston rod
7. Remove the guide ring on the piston rod **[Point 5]**
8. Remove the bottom (lower side) and the parachute valve **[Point 6]**
9. Remove the cylinder **[Point 7]**

Installation procedure

The reassembly procedure is the reverse of the disassembly procedure.

Remarks:

- **Apply hydraulic oil to gaskets, O-rings and dust seal lips**

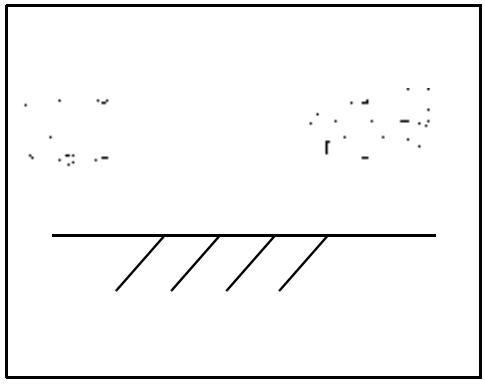

Point Operation

[Point 1]

Disassembly:

Lock the cylinder parallel to the ground using aluminum clamps

Installation:

Tighten the bushing to the cylinder as shown in the paragraph "Side/Rear Cylinders"

Remarks:

Do not completely insert the rod as this could damage the braking device, if fitted

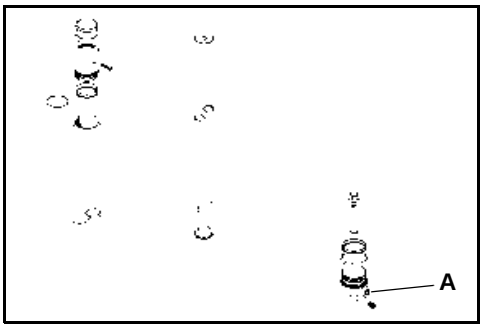

[Point 2]
Disassembly:
Use compressed air in point **(A)** to remove the rod

Remarks:
Prevent the rod from coming into contact with other parts

[Point 3]
Disassembly:
Lock the bottom as shown in figure

[Point 4]
Disassembly:
Unscrew the bushing as shown in figure

Installation:
Touch up the cover (if damaged during removal) with paint, without contaminating the rod

Removal (if the previous one is not available):
Unscrew the bushing as shown in figure

Installation:
Touch up the cover (if damaged during removal) with paint, without contaminating the rod

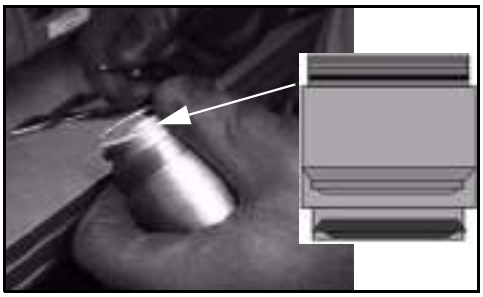

Installation:

Clean the housing seats with compressed air; lubricate the gasket with hydraulic oil before installation to facilitate positioning

Remarks:
Check that the gasket is correctly in its seat and is not damaged or twisted. Gaskets may be more elastic if heated to a max. temperature of 50°C

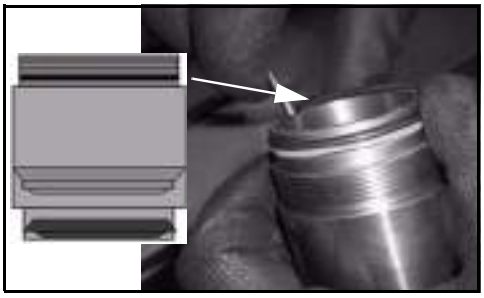

Installation:

Lubricate the o-ring with hydraulic oil before mounting in order to facilitate its positioning

Remarks:
Check that the o-ring is correctly in its seat and is not damaged or twisted

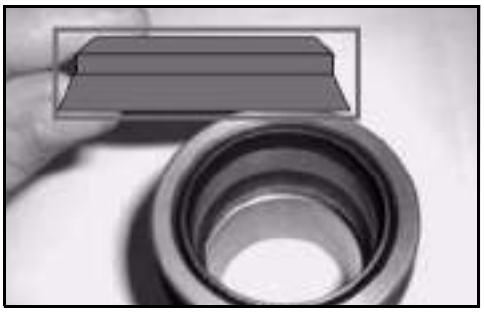

Installation:

Clean the housing seats with compressed air; lubricate the gasket with hydraulic oil before installation to facilitate positioning

Remarks:
Check that the gasket is correctly in its seat and is not damaged or twisted. Gaskets may be more elastic if heated to a max. temperature of 50°C

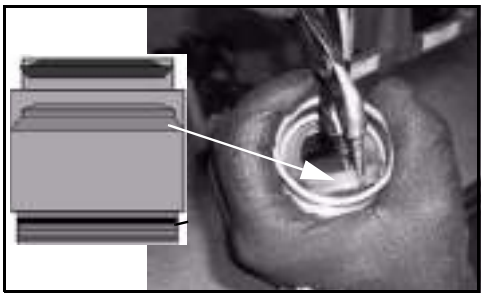

Installation:

Clean the housing seats with compressed air; lubricate the gasket with hydraulic oil before installation and twist slightly when inserting

Remarks:
Check that the gasket is correctly in its seat and is not damaged or twisted. Gaskets may be more elastic if heated to a max. temperature of 50°C

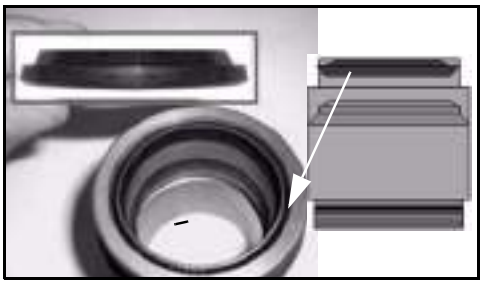

Installation:

Clean the housing seats with compressed air; lubricate the scraper with hydraulic oil before installation to facilitate positioning

Remarks:
Check that the scraper is correctly in its seat and is not damaged or twisted Gaskets may be more elastic if heated to a max. temperature of 50°C

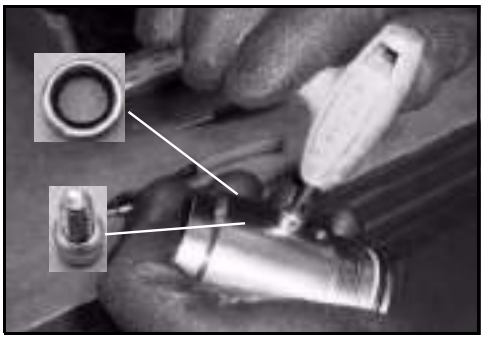

Installation:

Clean the housing seats with compressed air.
Manual tightening

Installation:

Lubricate the bushing with grease before inserting the rod

[Point 5]

Installation:

Clean the housing seat with compressed air; insert the seeger

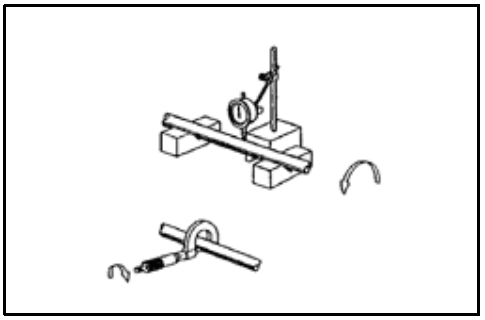

Inspection:

Measure the external diameter of the piston rod; measure the bend of the piston rod
Limit: 2.0 mm (0.079 in)

Remarks:
See paragraph "Cylinder Specifications" for the internal diameter

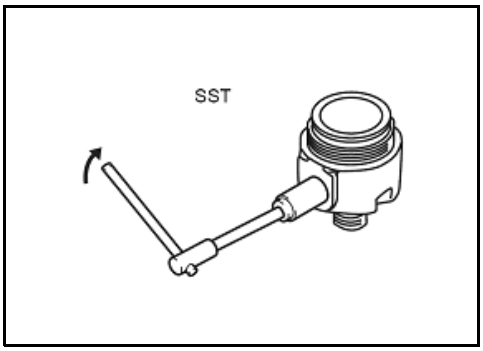

[Point 6]
Disassembly:
SST09610-T1000-71
Tightening torque = **3 Nm**

Installation:
Clean the housing seat with compressed air; insert the valve

Remarks:
See paragraph "Cylinder Specifications" for the valve opening diameter and setting

Installation:
Clean the housing seats with compressed air; lubricate the gasket with hydraulic oil before installation to facilitate positioning

Remarks:
Check that the gasket is correctly in its seat and is not damaged or twisted. Gaskets may be more elastic if heated to a max. temperature of 50°C

Installation:
Lubricate the o-ring with hydraulic oil before mounting in order to facilitate its positioning

Remarks:
Check that the o-ring is correctly in its seat and is not damaged or twisted

Installation:
Use Loxeal 82-33 on the brake body before screwing it onto the bottom;
tighten the bottom to the cylinder (tightening torque = **450 ± 5% Nm**)

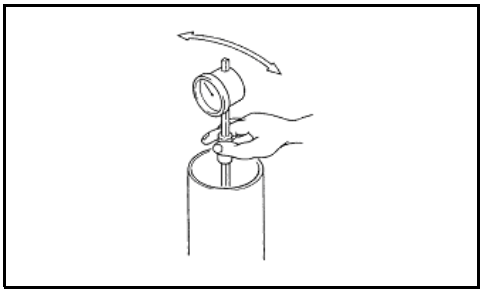

[Point 7]
Inspection:
Measure the internal diameter of the lifting cylinder and check that it is in good condition

Remarks:
See paragraph "Cylinder Specifications" for the internal diameter

SIDE CYLINDER GASKETS (3M TV)

DISASSEMBLY • INSPECTION • REASSEMBLY

Tightening torque T=Nm

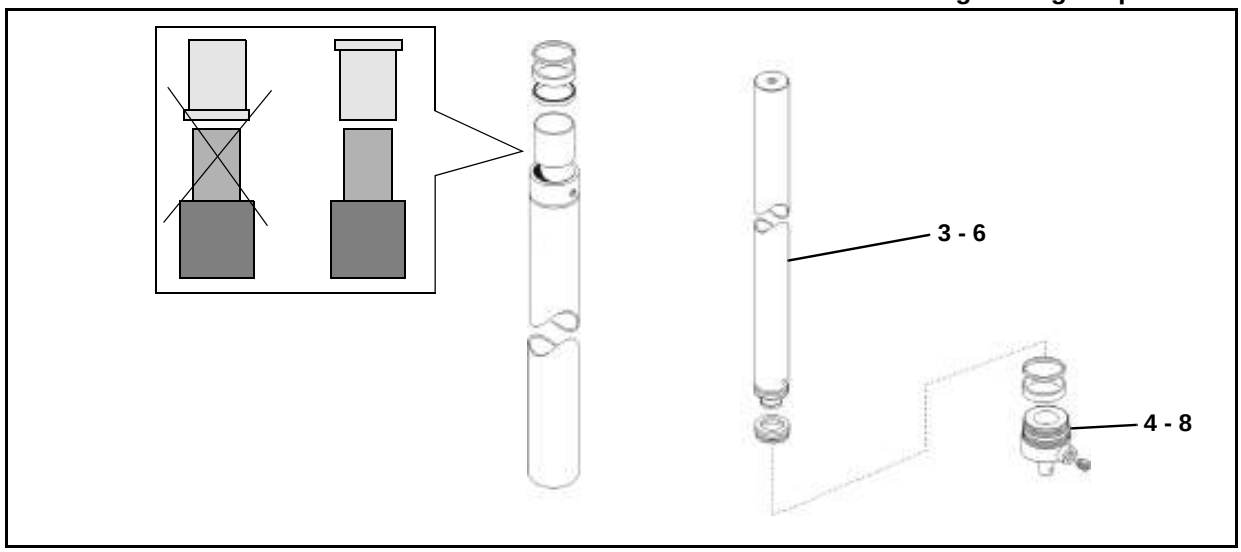

Removal procedure

1. Lock the cylinder in a vice **[Point 1]**
2. Position a container to collect the oil
3. Remove the piston rod **[Point 2]**
4. Lock the bottom **[Point 3]**
5. Remove the bushing from the cylinder (upper side) **[Point 4]**
6. Remove the piston rod
7. Remove the guide ring on the piston rod **[Point 5]**
8. Remove the bottom (lower side) and the parachute valve **[Point 6]**
9. Remove the cylinder **[Point 7]**

Installation procedure

The reassembly procedure is the reverse of the disassembly procedure.

Remarks:

- **Apply hydraulic oil to gaskets, O-rings and dust seal lips**

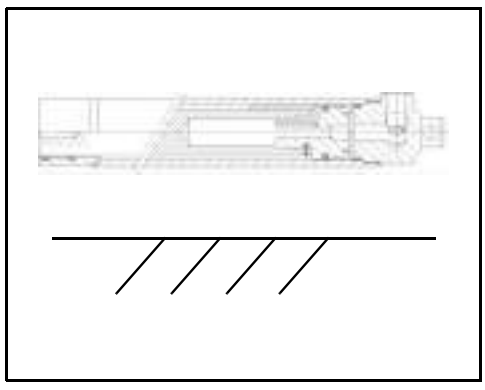

Point Operation

[Point 1]

Disassembly:

Lock the cylinder parallel to the ground using aluminum clamps

Installation:

Tighten the bushing to the cylinder

Remarks:

Do not completely insert the rod as this could damage the braking device, if fitted

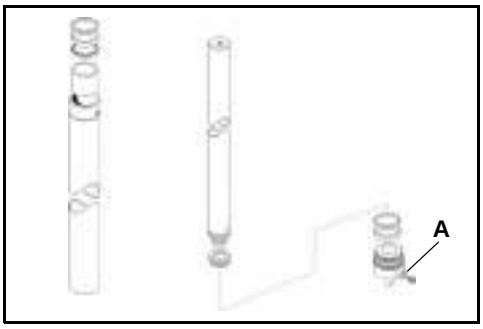

[Point 2]
Disassembly:
Use compressed air in point **(A)** to remove the rod

Remarks:
Prevent the rod from coming into contact with other parts

[Point 3]
Disassembly:
Lock the bottom as shown in figure

[Point 4]
Disassembly:
Unscrew the bushing as shown in figure

Installation:
Touch up the cover (if damaged during removal) with paint, without contaminating the rod

Removal (if the previous one is not available):
Unscrew the bushing as shown in figure

Installation:
Touch up the cover (if damaged during removal) with paint, without contaminating the rod

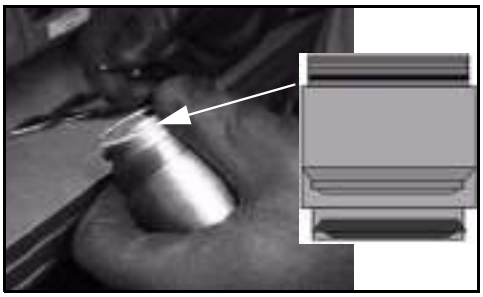

Installation:

Clean the housing seats with compressed air; lubricate the gasket with hydraulic oil before installation to facilitate positioning

Remarks:
Check that the gasket is correctly in its seat and is not damaged or twisted. Gaskets may be more elastic if heated to a max. temperature of 50°C

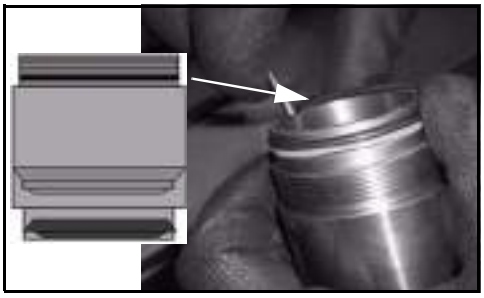

Installation:

Lubricate the o-ring with hydraulic oil before mounting in order to facilitate its positioning

Remarks:
Check that the o-ring is correctly in its seat and is not damaged or twisted

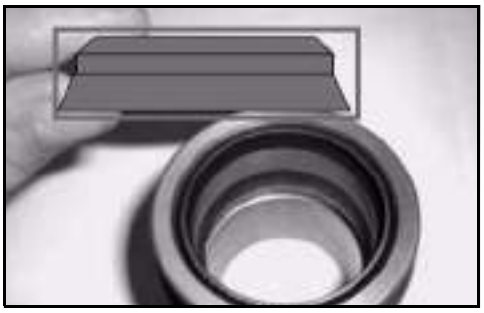

Installation:

Clean the housing seats with compressed air; lubricate the gasket with hydraulic oil before installation to facilitate positioning

Remarks:
Check that the gasket is correctly in its seat and is not damaged or twisted. Gaskets may be more elastic if heated to a max. temperature of 50°C

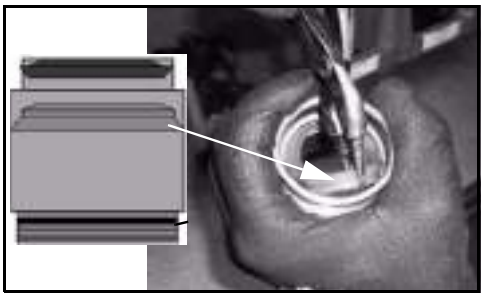

Installation:

Clean the housing seats with compressed air; lubricate the gasket with hydraulic oil before installation and twist slightly when inserting

Remarks:
Check that the gasket is correctly in its seat and is not damaged or twisted. Gaskets may be more elastic if heated to a max. temperature of 50°C

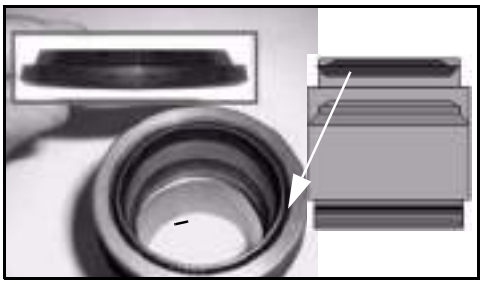

Installation:

Clean the housing seats with compressed air; lubricate the scraper with hydraulic oil before installation to facilitate positioning

Remarks:
Check that the scraper is correctly in its seat and is not damaged or twisted Gaskets may be more elastic if heated to a max. temperature of 50°C

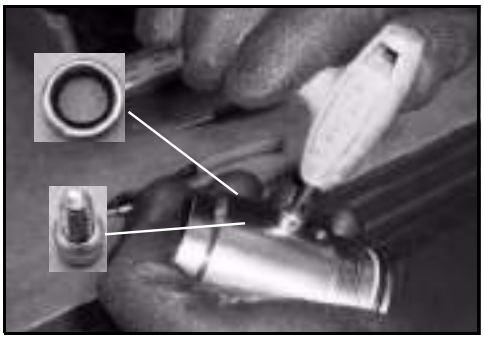

Installation:

Clean the housing seats with compressed air.
Manual tightening

Installation:

Lubricate the bushing with grease before inserting the rod

[Point 5]

Installation:

Clean the housing seat with compressed air; insert the seeger

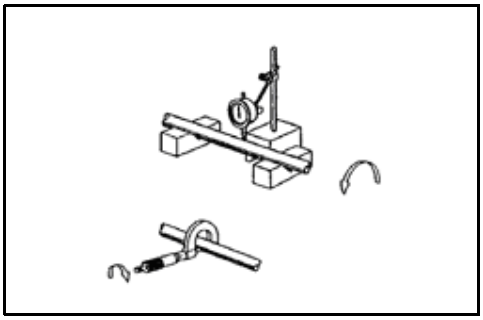

Inspection:

Measure the external diameter of the piston rod; measure the bend of the piston rod
Limit: 2.0 mm (0.079 in)

Remarks:
See paragraph "Cylinder Specifications" for the internal diameter

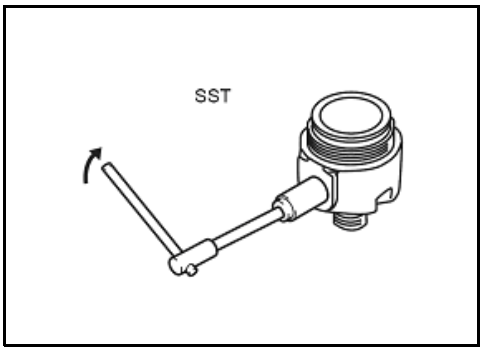

[Point 6]
Disassembly:
SST09610-T1000-71
Tightening torque = **3 Nm**

Installation:
Clean the housing seat with compressed air; insert the valve

Remarks:
See paragraph "Cylinder Specifications" for the valve opening diameter and setting

Installation:
Clean the housing seats with compressed air; lubricate the gasket with hydraulic oil before installation to facilitate positioning

Remarks:
Check that the gasket is correctly in its seat and is not damaged or twisted. Gaskets may be more elastic if heated to a max. temperature of 50°C

Installation:
Lubricate the o-ring with hydraulic oil before mounting in order to facilitate its positioning

Remarks:
- **Check that the o-ring is correctly in its seat and is not damaged or twisted**
- **Tighten the bottom to the cylinder (tightening torque = 450 ± 5% Nm)**

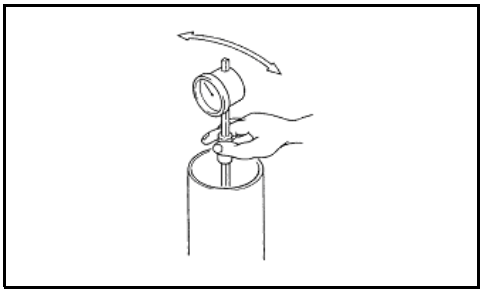

[Point 7]
Inspection:
Measure the internal diameter of the lifting cylinder and check that it is in good condition

Remarks:
See paragraph "Cylinder Specifications" for the internal diameter

SIDE CYLINDER GASKETS (2M FFL)

DISASSEMBLY • INSPECTION • REASSEMBLY

Tightening torque T=Nm

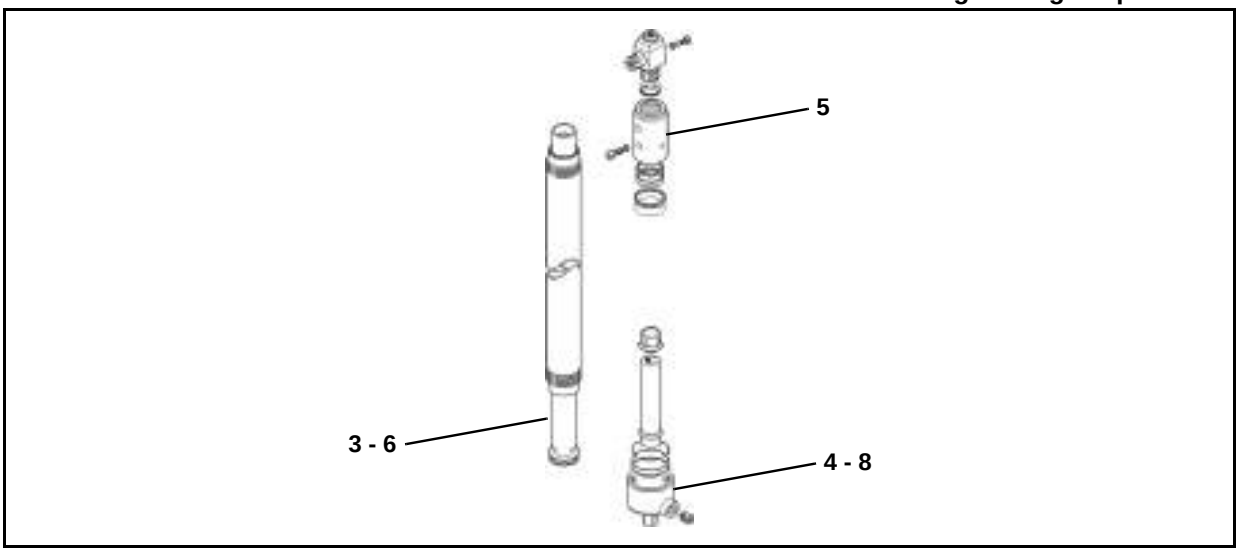

Removal procedure

1. Lock the cylinder in a vice **[Point 1]**
2. Position a container to collect the oil
3. Remove the piston rod **[Point 2]**
4. Lock the bottom **[Point 3]**
5. Remove the bushing from the cylinder (upper side) **[Point 4]**
6. Remove the piston rod
7. Remove the guide ring on the piston rod **[Point 5]**
8. Remove the bottom (lower side) and the parachute valve **[Point 6]**
9. Remove the cylinder **[Point 7]**

Installation procedure

The reassembly procedure is the reverse of the disassembly procedure.

Remarks:

- **Apply hydraulic oil to gaskets, O-rings and dust seal lips**

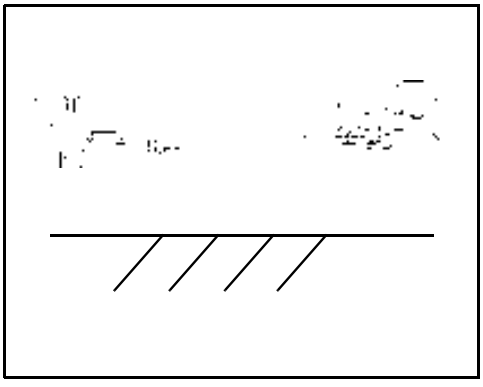

Point Operation

[Point 1]

Disassembly:

Lock the cylinder parallel to the ground using aluminum clamps

Installation:

Tighten the bushing to the cylinder

Remarks:

Do not completely insert the rod as this could damage the braking device, if fitted

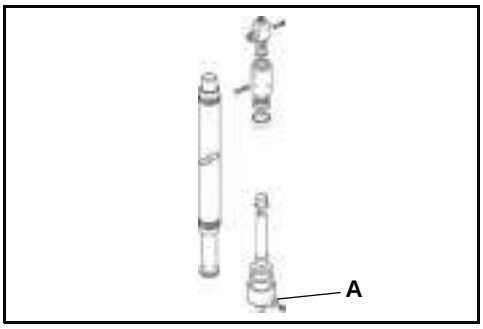

[Point 2]
Disassembly:
Use compressed air in point **(A)** to remove the rod

Remarks:
Prevent the rod from coming into contact with other parts

[Point 3]
Disassembly:
Lock the bottom as shown in figure

[Point 4]
Disassembly:
Unscrew the bushing as shown in figure

Installation:
Touch up the cover (if damaged during removal) with paint, without contaminating the rod

Removal (if the previous one is not available):
Unscrew the bushing as shown in figure

Installation:
Touch up the cover (if damaged during removal) with paint, without contaminating the rod

Installation:

Clean the housing seats with compressed air; lubricate the gasket with hydraulic oil before installation to facilitate positioning

Remarks:
Check that the gasket is correctly in its seat and is not damaged or twisted. Gaskets may be more elastic if heated to a max. temperature of 50°C

Installation:

Lubricate the o-ring with hydraulic oil before mounting in order to facilitate its positioning

Remarks:
Check that the o-ring is correctly in its seat and is not damaged or twisted

Installation:

Clean the housing seats with compressed air; lubricate the gasket with hydraulic oil before installation to facilitate positioning

Remarks:
Check that the gasket is correctly in its seat and is not damaged or twisted. Gaskets may be more elastic if heated to a max. temperature of 50°C

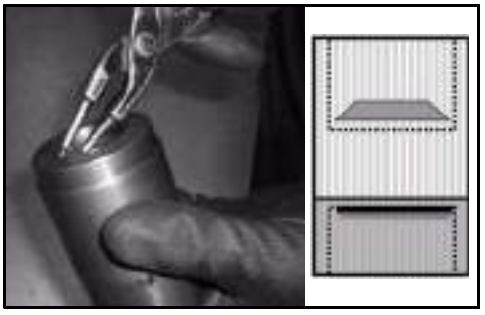

Installation:

Clean the housing seats with compressed air; lubricate the gasket with hydraulic oil before installation and twist slightly when inserting

Remarks:
Check that the gasket is correctly in its seat and is not damaged or twisted. Gaskets may be more elastic if heated to a max. temperature of 50°C

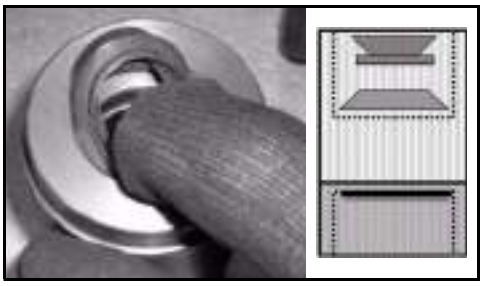

Installation:

Clean the housing seats with compressed air; lubricate the scraper with hydraulic oil before installation to facilitate positioning

Remarks:
Check that the gasket is correctly in its seat and is not damaged or twisted. Gaskets may be more elastic if heated to a max. temperature of 50°C

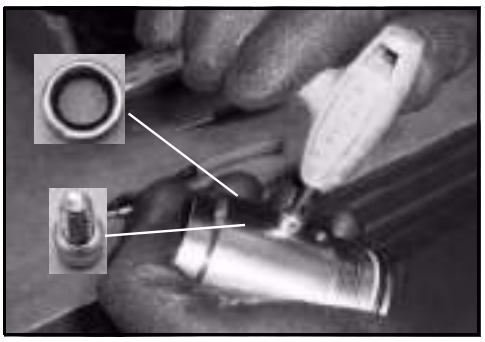

Installation:

Clean the housing seats with compressed air.
Manual tightening

Installation:

Lubricate the bushing with grease before inserting the rod

[Point 5]
Installation:
Clean the housing seat with compressed air; insert the seeger

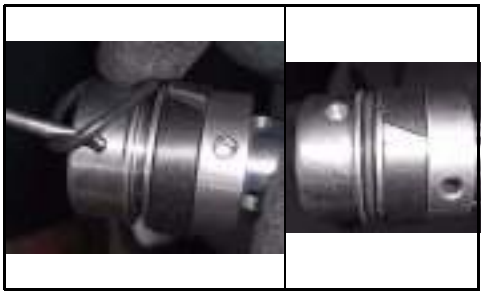

Installation:
Lubricate the o-ring with hydraulic oil before mounting in order to facilitate its positioning

Remarks:
Check that the o-ring is correctly in its seat and is not damaged or twisted

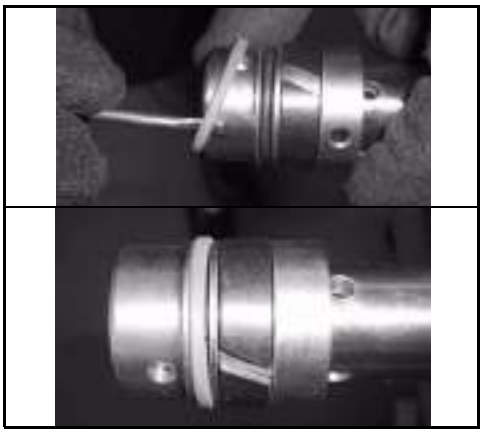

Installation:
Clean the housing seats with compressed air; lubricate the gasket with hydraulic oil before installation to facilitate positioning

Remarks:
Check that the gasket is correctly in its seat and is not damaged or twisted. Gaskets may be more elastic if heated to a max. temperature of 50°C

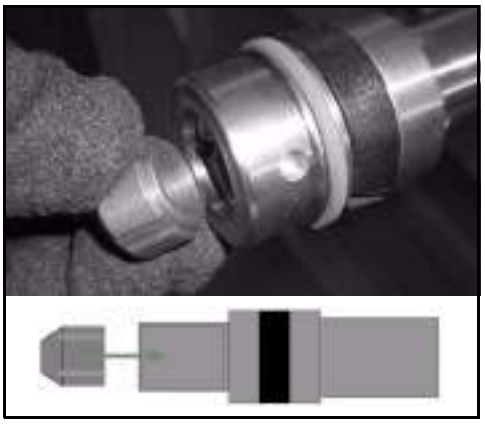

Installation:
Insert the bushing as shown in the figure, otherwise it will not be possible to apply the seeger

Installation:
Use pliers and twist slightly to insert

Installation:
Clean the housing seats with compressed air.
Manual tightening

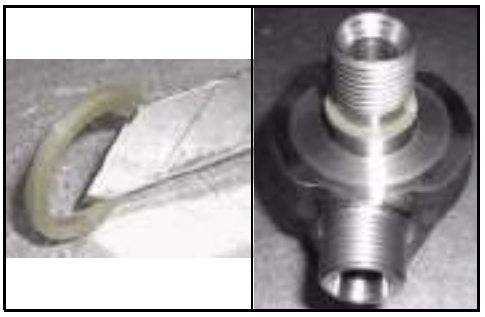

Installation:
Make a diagonal cut to facilitate insertion

Installation:
Use the inserter and lubricate to facilitate insertion

Remarks:
- **Check that the o-ring is correctly in its seat and is not damaged or twisted**
- **Use Loctite 222 on the upper end**

Installation:

Place the upper end near the pipe and tighten with a pneumatic screwdriver with percussion (or electrical equivalent)

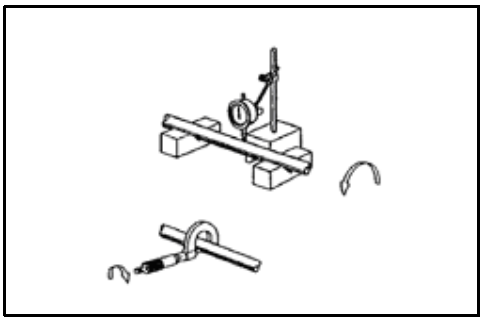

Inspection:

Measure the external diameter of the piston rod; measure the bend of the piston rod

Limit: 2.0 mm (0.079 in)

Remarks:

See paragraph "Cylinder Specifications" for the internal diameter

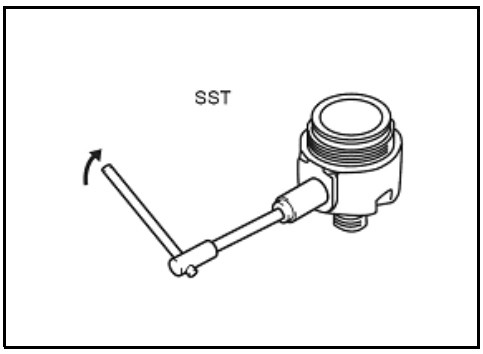

[Point 6]

Disassembly:

SST09610-T1000-71

Tightening torque = **3 Nm**

Installation:

Clean the housing seat with compressed air; insert the valve

Remarks:

See paragraph "Cylinder Specifications" for the valve opening diameter and setting

Installation:

Lubricate the o-ring with hydraulic oil before mounting in order to facilitate its positioning

Remarks:

Check that the o-ring is correctly in its seat and is not damaged or twisted

Installation:

Clean the housing seats with compressed air; lubricate the gasket with hydraulic oil before installation to facilitate positioning

Remarks:
Check that the gasket is correctly in its seat and is not damaged or twisted. Gaskets may be more elastic if heated to a max. temperature of 50°C

Installation:

Clean the housing seats with compressed air; lubricate the gasket with hydraulic oil before installation to facilitate positioning

Remarks:
Check that the gasket is correctly in its seat and is not damaged or twisted. Gaskets may be more elastic if heated to a max. temperature of 50°C

Installation:

Use Loxeal 82-33 on the brake body before screwing it onto the bottom

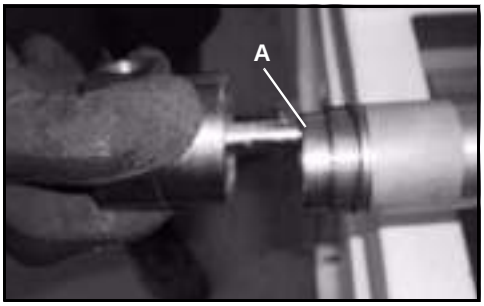

Installation:

Use Loctite 222 on the upper end **(A)**;
tighten the bottom to the cylinder (tightening torque = **450 ± 5% Nm**)

Remarks:
Do not screw the bottom onto the cylinder when the bushing is not in its seat, as this could bend the brake body

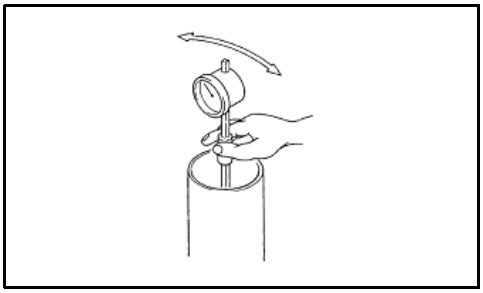

[Point 7]
Inspection:

Measure the internal diameter of the lifting cylinder and check that it is in good condition

Remarks:
See paragraph "Cylinder Specifications" for the internal diameter

SIDE CYLINDER GASKETS (3M FFL)

DISASSEMBLY • INSPECTION • REASSEMBLY

Tightening torque T=Nm

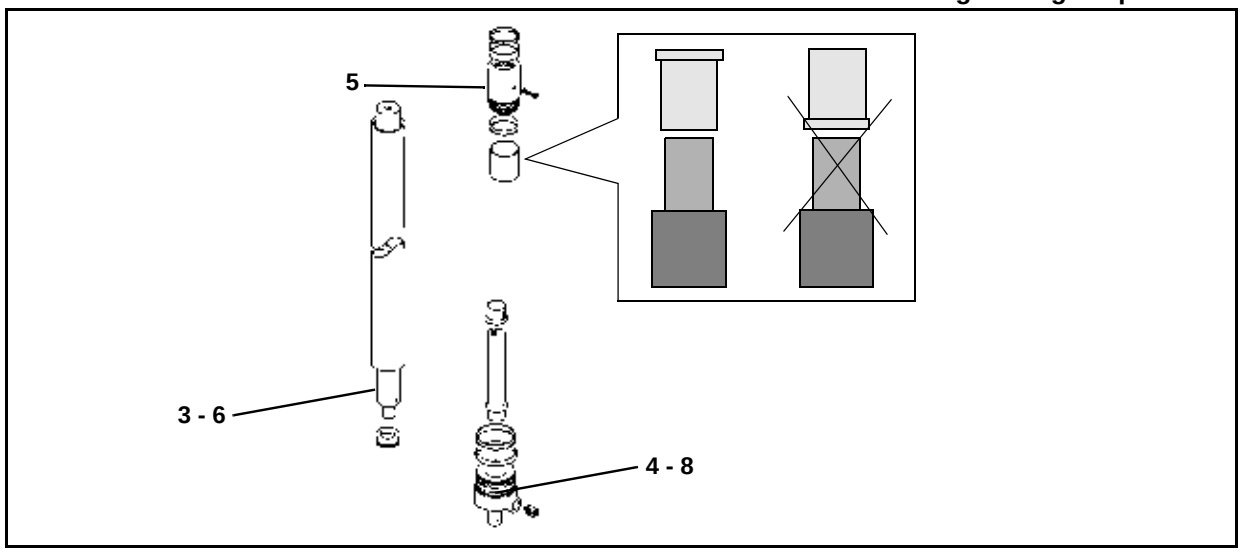

Removal procedure

1. Lock the cylinder in a vice **[Point 1]**
2. Position a container to collect the oil
3. Remove the piston rod **[Point 2]**
4. Lock the bottom **[Point 3]**
5. Remove the bushing from the cylinder (upper side) **[Point 4]**
6. Remove the piston rod
7. Remove the guide ring on the piston rod **[Point 5]**
8. Remove the bottom (lower side) and the parachute valve **[Point 6]**
9. Remove the cylinder **[Point 7]**

Installation procedure

The reassembly procedure is the reverse of the disassembly procedure.

Remarks:

- **Apply hydraulic oil to gaskets, O-rings and dust seal lips**

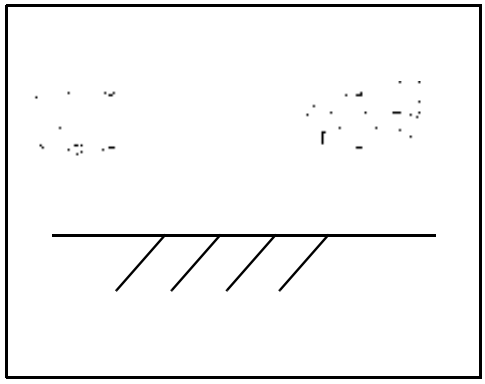

Point Operation

[Point 1]

Disassembly:

Lock the cylinder parallel to the ground using aluminum clamps

Installation:

Tighten the bushing to the cylinder as shown in the paragraph "Side/Rear Cylinders"

Remarks:

Do not completely insert the rod as this could damage the braking device, if fitted

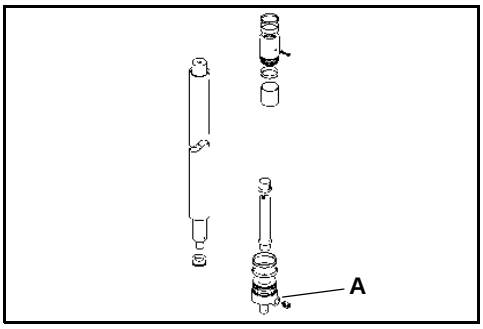

[Point 2]
Disassembly:
Use compressed air in point **(A)** to remove the rod

Remarks:
Prevent the rod from coming into contact with other parts

[Point 3]
Disassembly:
Lock the bottom as shown in figure

[Point 4]
Disassembly:
Unscrew the bushing as shown in figure

Installation:
Touch up the cover (if damaged during removal) with paint, without contaminating the rod

Removal (if the previous one is not available):
Unscrew the bushing as shown in figure

Installation:
Touch up the cover (if damaged during removal) with paint, without contaminating the rod

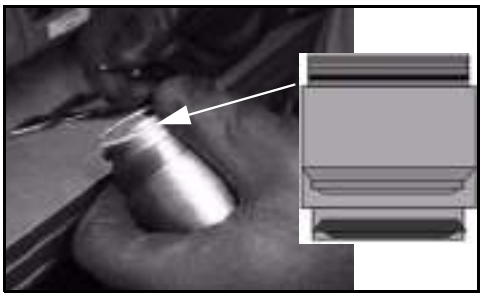

Installation:

Clean the housing seats with compressed air; lubricate the gasket with hydraulic oil before installation to facilitate positioning

Remarks:
Check that the gasket is correctly in its seat and is not damaged or twisted. Gaskets may be more elastic if heated to a max. temperature of 50°C

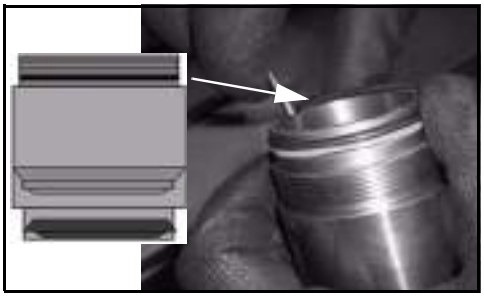

Installation:

Lubricate the o-ring with hydraulic oil before mounting in order to facilitate its positioning

Remarks:
Check that the o-ring is correctly in its seat and is not damaged or twisted

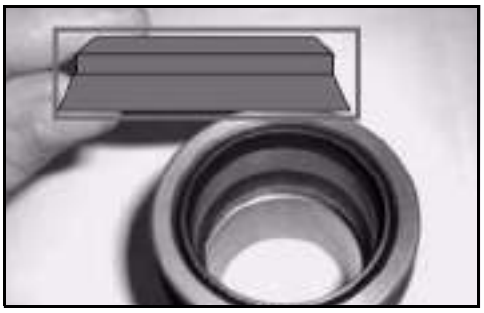

Installation:

Clean the housing seats with compressed air; lubricate the gasket with hydraulic oil before installation to facilitate positioning

Remarks:
Check that the gasket is correctly in its seat and is not damaged or twisted. Gaskets may be more elastic if heated to a max. temperature of 50°C

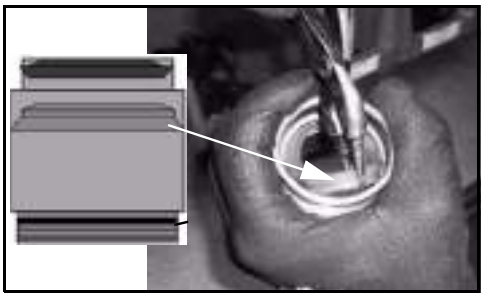

Installation:

Clean the housing seats with compressed air; lubricate the gasket with hydraulic oil before installation and twist slightly when inserting

Remarks:
Check that the gasket is correctly in its seat and is not damaged or twisted. Gaskets may be more elastic if heated to a max. temperature of 50°C

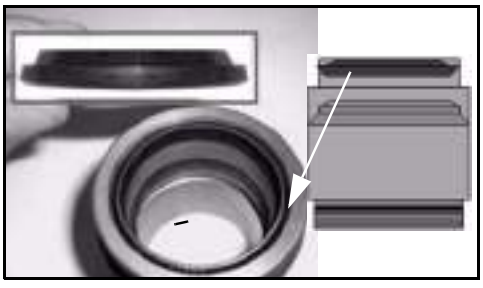

Installation:

Clean the housing seats with compressed air; lubricate the scraper with hydraulic oil before installation to facilitate positioning

Remarks:
Check that the scraper is correctly in its seat and is not damaged or twisted Gaskets may be more elastic if heated to a max. temperature of 50°C

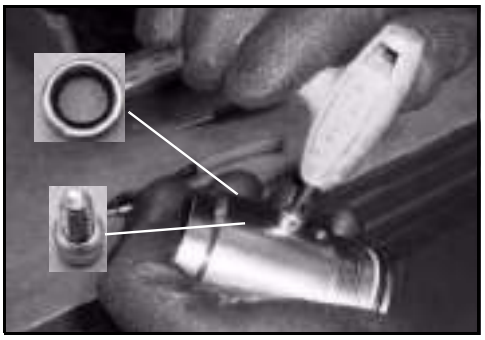

Installation:

Clean the housing seats with compressed air.
Manual tightening

Installation:

Lubricate the bushing with grease before inserting the rod

[Point 5]

Installation:

Clean the housing seat with compressed air; insert the seeger

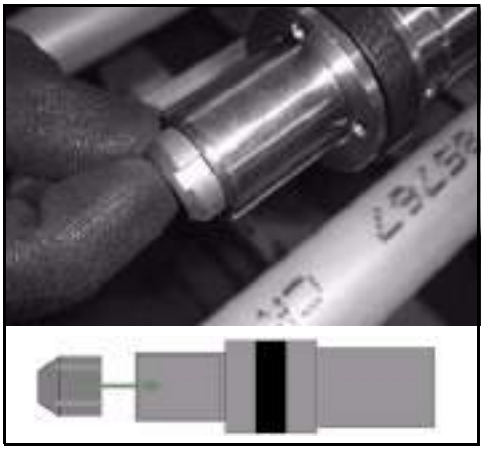

Installation:

Insert the bushing as shown in the figure, otherwise it will not be possible to apply the seeger

Installation:

Use pliers and twist slightly to insert

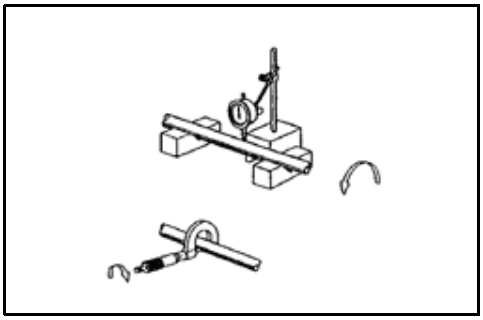

Inspection:

Measure the external diameter of the piston rod; measure the bend of the piston rod

Limit: 2.0 mm (0.079 in)

Remarks:

See paragraph "Cylinder Specifications" for the internal diameter

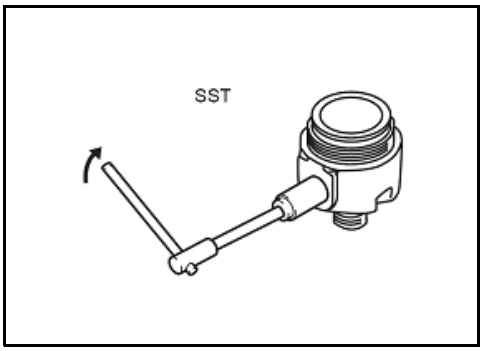

[Point 6]

Disassembly:

SST09610-T1000-71

Tightening torque = **3 Nm**

Installation:

Clean the housing seat with compressed air; insert the valve

Remarks:

See paragraph "Cylinder Specifications" for the valve opening diameter and setting

Installation:

Clean the housing seats with compressed air; lubricate the gasket with hydraulic oil before installation to facilitate positioning

Remarks:

Check that the gasket is correctly in its seat and is not damaged or twisted. Gaskets may be more elastic if heated to a max. temperature of 50°C

Installation:

Lubricate the o-ring with hydraulic oil before mounting in order to facilitate its positioning

Remarks:
Check that the o-ring is correctly in its seat and is not damaged or twisted

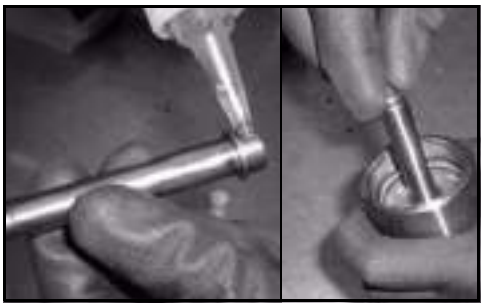

Installation:

Use Loxeal 82-33 on the brake body before screwing it onto the bottom;
tighten the bottom to the cylinder (tightening torque = **450 ± 5% Nm**)

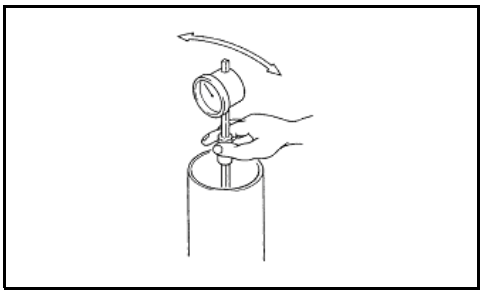

[Point 7]
Inspection:

Measure the internal diameter of the lifting cylinder and check that it is in good condition

Remarks:
See paragraph "Cylinder Specifications" for the internal diameter

CENTRAL CYLINDERS

REMOVAL • INSTALLATION

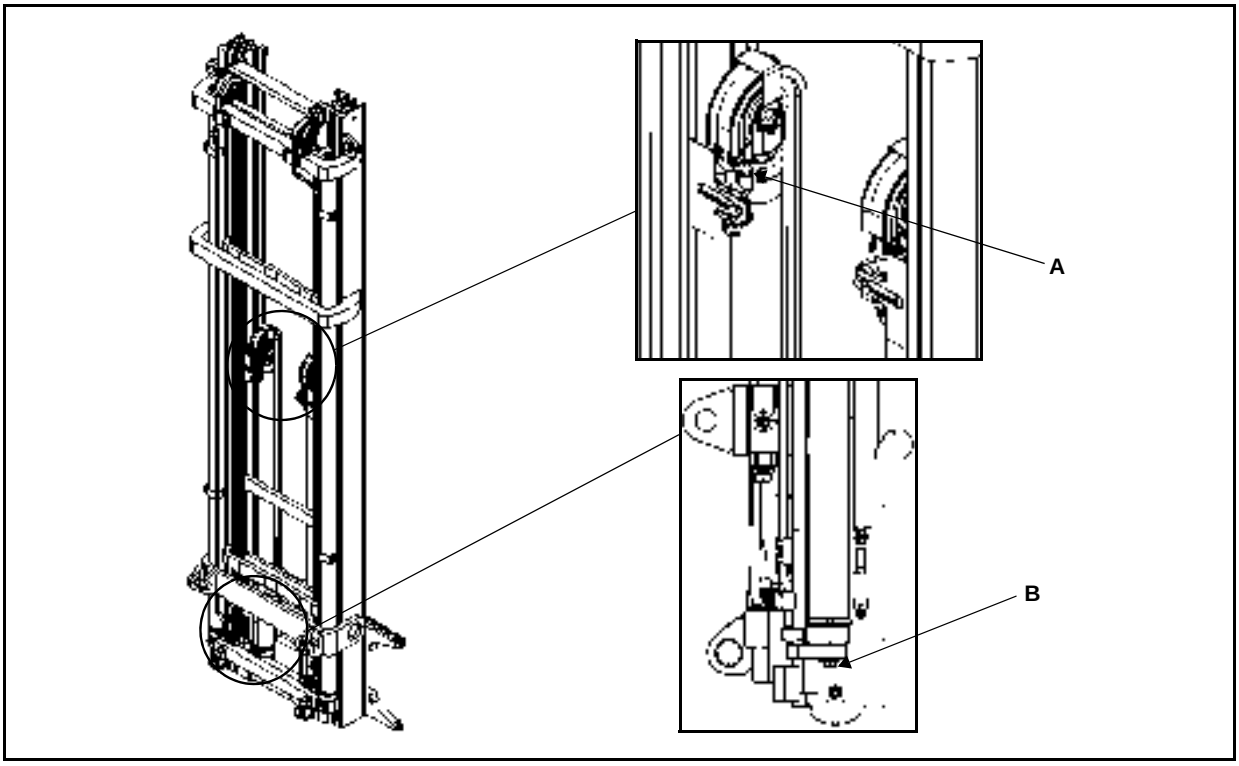

Removal procedure

1. Set the mast in the vertical position and fully lower the forks
2. Disconnect the battery connector
3. Remove the lifting chain and roller from the cylinder **[Point 1]**
4. Disconnect the cylinder hose
5. Remove the bottom fixing bolt **B [Point 2]**
6. Remove the upper fixing cylinder bracket **A [Point 3]**
7. Remove the central cylinder **[Point 4]**

Installation procedure

The reassembly procedure is the reverse of the disassembly procedure.

Note:
After installing the lifting cylinders, follow the steps below:

1. **Without load repeat full stroke lifting and lowering of the cylinder to bleed air and check normal functioning**
2. **Check the hydraulic oil level and add if insufficient**

Point Operation

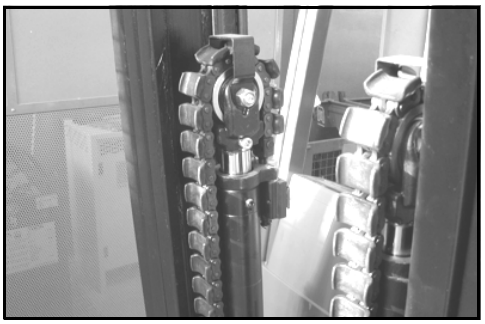

[Point 1]
Disassembly:
Remove the chain and then the allen screw in order to take away the roller on his support

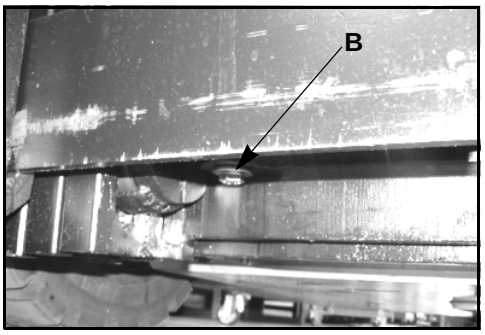

[Point 2]
Disassembly:
Remove the bottom fixing bolt **B**

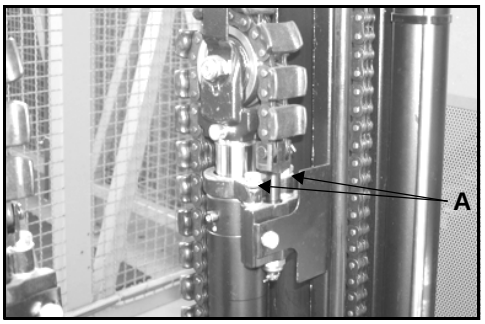

[Point 3]
Disassembly:
Remove the two screws of the upper fixing cylinder bracket **A**

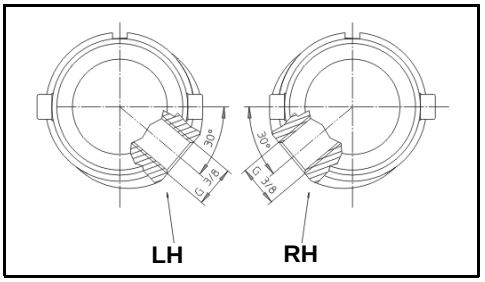

[Point 4]
Installation 2M FFL:
Respect the orientation between holes G3/8
RH = right cylinder
LH = left cylinder

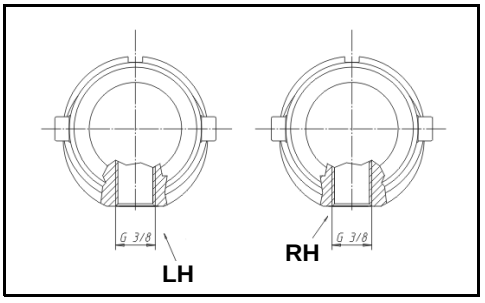

Installation 3M FFL:
Respect the orientation between holes G3/8
RH = right cylinder
LH = left cylinder

CENTRAL CYLINDER GASKETS (2M FFL & 3M FFL)

DISASSEMBLY • INSPECTION • REASSEMBLY

Tightening torque T=Nm

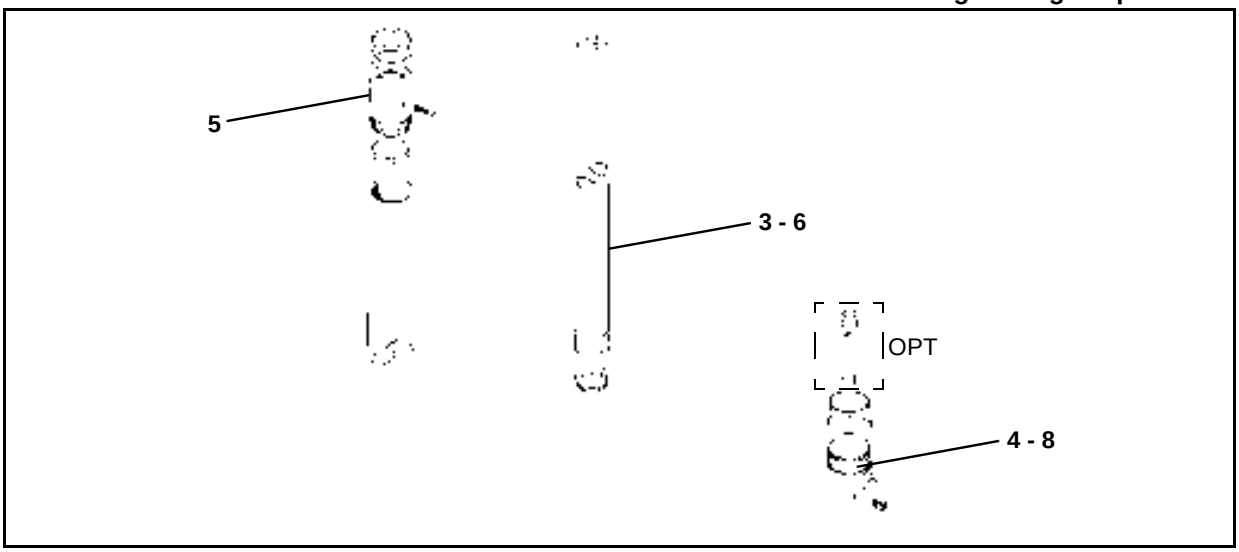

Removal procedure

1. Lock the cylinder in a vice **[Point 1]**
2. Position a container to collect the oil
3. Remove the piston rod **[Point 2]**
4. Lock the bottom **[Point 3]**
5. Remove the bushing from the cylinder (upper side) **[Point 4]**
6. Remove the piston rod
7. Remove the guide ring on the piston rod **[Point 5]**
8. Remove the bottom (lower side) and the parachute valve **[Point 6]**
9. Remove the cylinder **[Point 7]**

Installation procedure

The reassembly procedure is the reverse of the disassembly procedure.

Remarks:

- **Apply hydraulic oil to gaskets, O-rings and dust seal lips**

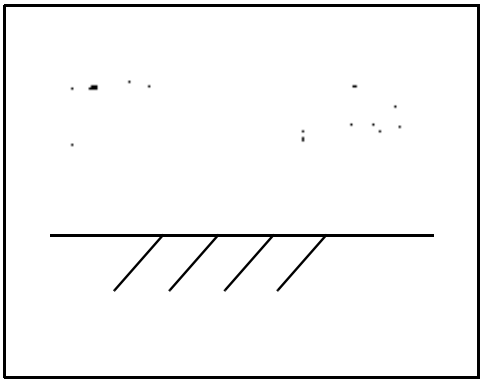

Point Operation

[Point 1]

Disassembly:

Lock the cylinder parallel to the ground using aluminum clamps

Installation:

Tighten the bushing to the cylinder as shown in the paragraph "Central Cylinders"

Remarks:

Do not completely insert the rod as this could damage the braking device, if fitted

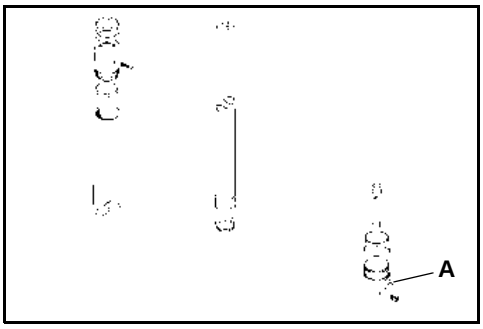

[Point 2]
Disassembly:
Use compressed air in point **(A)** to remove the rod

Remarks:
Prevent the rod from coming into contact with other parts

[Point 3]
Disassembly:
Lock the bottom as shown in figure

[Point 4]
Disassembly:
Unscrew the bushing as shown in figure

Installation:
Touch up the cover (if damaged during removal) with paint, without contaminating the rod

Removal (if the previous one is not available):
Unscrew the bushing as shown in figure

Installation:
Touch up the cover (if damaged during removal) with paint, without contaminating the rod

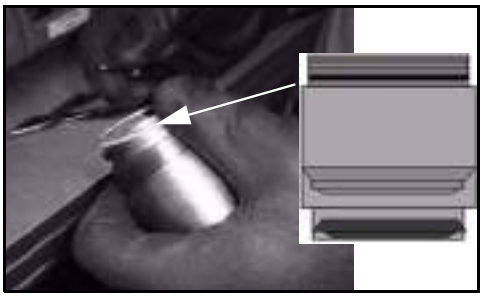

Installation:

Clean the housing seats with compressed air; lubricate the gasket with hydraulic oil before installation to facilitate positioning

Remarks:
Check that the gasket is correctly in its seat and is not damaged or twisted. Gaskets may be more elastic if heated to a max. temperature of 50°C

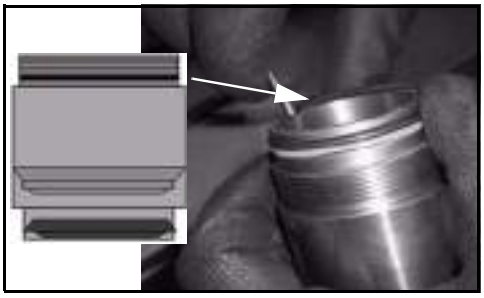

Installation:

Lubricate the o-ring with hydraulic oil before mounting in order to facilitate its positioning

Remarks:
Check that the o-ring is correctly in its seat and is not damaged or twisted

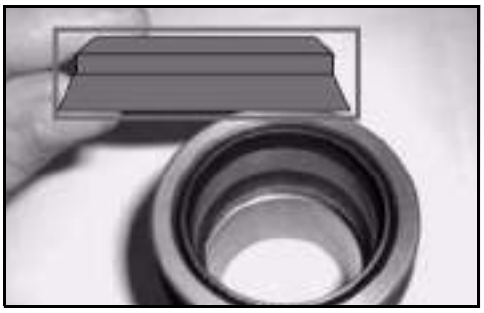

Installation:

Clean the housing seats with compressed air; lubricate the gasket with hydraulic oil before installation to facilitate positioning

Remarks:
Check that the gasket is correctly in its seat and is not damaged or twisted. Gaskets may be more elastic if heated to a max. temperature of 50°C

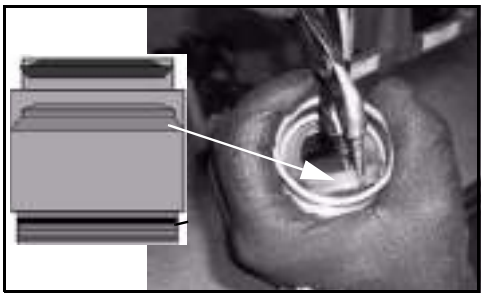

Installation:

Clean the housing seats with compressed air; lubricate the gasket with hydraulic oil before installation and twist slightly when inserting

Remarks:
Check that the gasket is correctly in its seat and is not damaged or twisted. Gaskets may be more elastic if heated to a max. temperature of 50°C

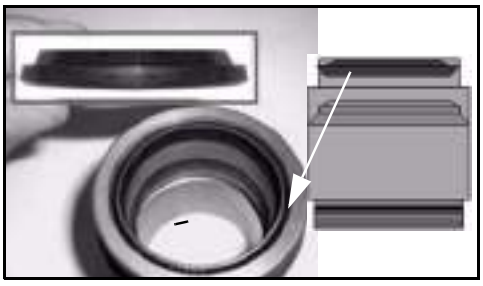

Installation:

Clean the housing seats with compressed air; lubricate the scraper with hydraulic oil before installation to facilitate positioning

Remarks:
Check that the scraper is correctly in its seat and is not damaged or twisted Gaskets may be more elastic if heated to a max. temperature of 50°C

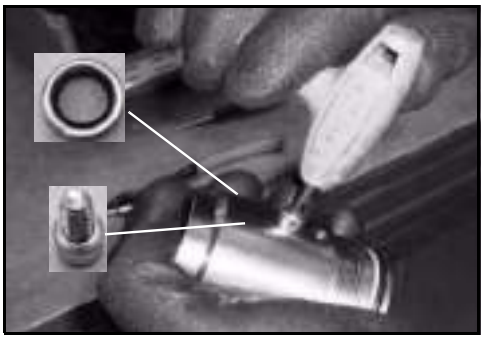

Installation:

Clean the housing seats with compressed air.
Manual tightening

Installation:

Lubricate the bushing with grease before inserting the rod

[Point 5]

Installation:

Clean the housing seat with compressed air; lubricate the o-ring with hydraulic oil before installation to facilitate positioning

Remarks:
Check that the o-ring is correctly in its seat and is not damaged or twisted

Installation:

Clean the housing seats with compressed air; lubricate the gasket with hydraulic oil before installation to facilitate positioning

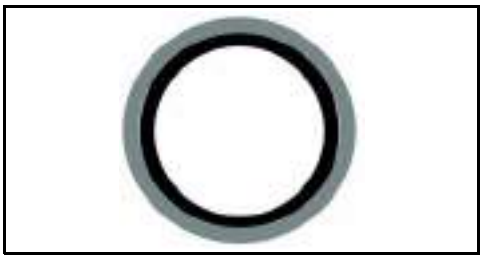

Remarks:
- **Place the gasket over the o-ring**
- **Check that the gasket is correctly in its seat and is not damaged or twisted. Gaskets may be more elastic if heated to a max. temperature of 50°C**

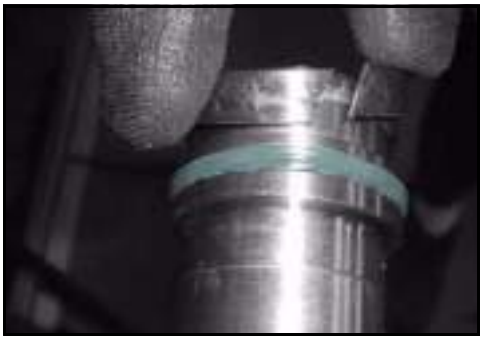

Installation:

Clean the housing seat with compressed air; insert the seeger

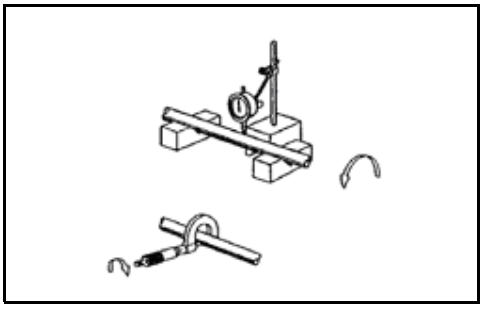

Inspection:

Measure the external diameter of the piston rod; measure the bend of the piston rod
Limit: 2.0 mm (0.079 in)

Remarks:
See paragraph "Cylinder Specifications" for the internal diameter

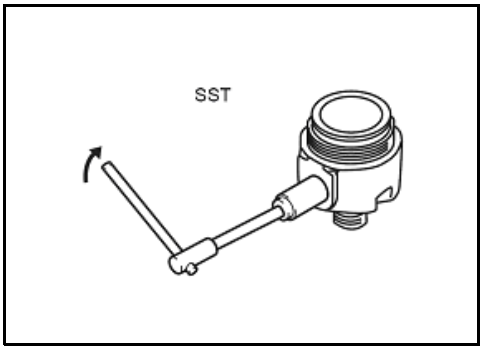

[Point 6]

Disassembly:

SST09610-T1000-71
Tightening torque = **3 Nm**

Installation:

Clean the housing seat with compressed air; insert the valve

Remarks:
See paragraph "Cylinder Specifications" for the valve opening diameter and setting

Installation:

Clean the housing seats with compressed air; lubricate the gasket with hydraulic oil before installation to facilitate positioning

Remarks:
Check that the gasket is correctly in its seat and is not damaged or twisted. Gaskets may be more elastic if heated to a max. temperature of 50°C

Installation:

Lubricate the o-ring with hydraulic oil before mounting in order to facilitate its positioning

Remarks:
Check that the o-ring is correctly in its seat and is not damaged or twisted

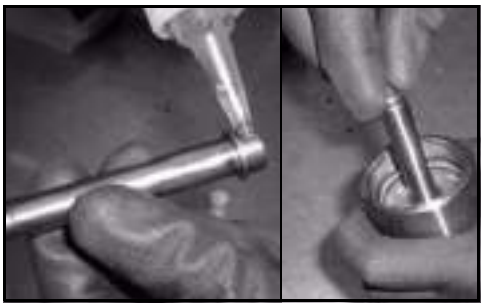

Installation:

Use Loxeal 82-33 on the brake body before screwing it onto the bottom;

Tighten the bottom to the cylinder (tightening torque = 300 ± 5% Nm)

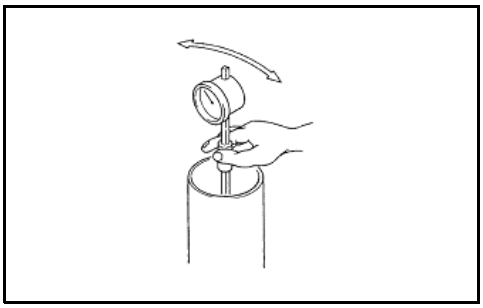

[Point 7]
Inspection:

Measure the internal diameter of the lifting cylinder and check that it is in good condition

Remarks:
See paragraph "Cylinder Specifications" for the internal diameter

LOWERING VALVE (HAWE, for all masts)

SPECIFICATIONS

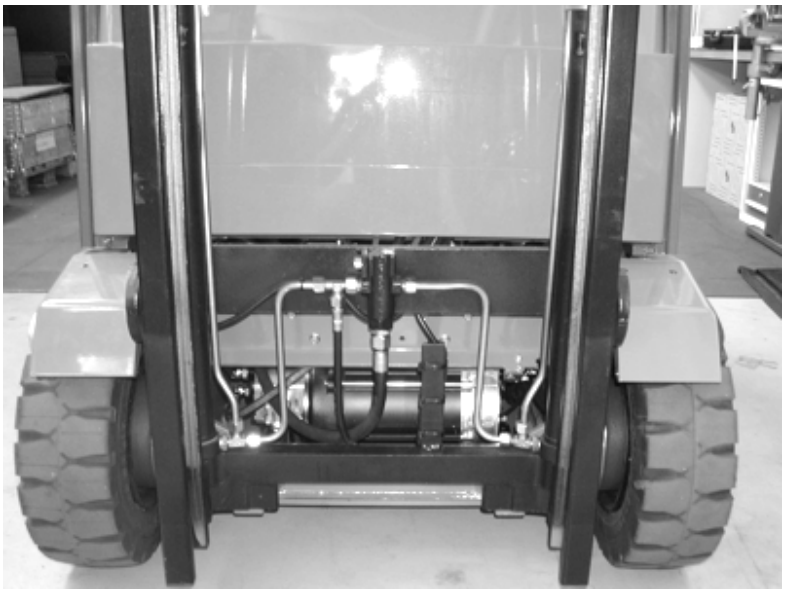

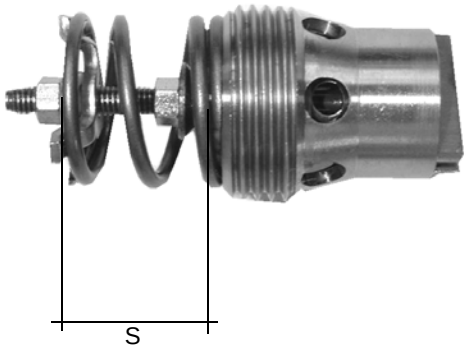

Hawe valve setting		
Mast type	Hawe valve type	s (mm)
2M TV	sb 25 c	17.5
3M TV	sb 25 c	16.0
2M FFL	sb 25 c	17.5
3M FFL	sb 25 c	17.5

MAST PERFORMANCE TABLE

LIFTING LOGIC UNIT

Q1 max. load Q2 max. load at max. height

Carry out the test with electrolyte density 1.18 ÷ 1.26 Kg/l, electrolyte temperature 20° ÷ 50°, oil temperature 30° ÷ 50° and room temperature > 18°C

1.0t

Load	FFL						TV					
kg	m/sec		amp		bar		m/sec		amp		bar	
Q1	0.25	min	max	330	max	135	0.25	min	max	370	max	145
lowering												
Q1	max	0.60					max	0.60				
Lifting end stroke (max. pressure valve adjustment)									max	410	max	175

1.25t

Load	FFL						TV					
kg	m/sec		amp		bar		m/sec		amp		bar	
Q1	0.24	min	max	380	max	160	0.24	min	max	410	max	185
lowering												
Q1	max	0.60					max	0.60				
Lifting end stroke (max. pressure valve adjustment)									max	450	max	215

1.5t

Load	FFL						TV					
kg	m/sec		amp		bar		m/sec		amp		bar	
Q1	0.23	min	max	410	max	180	0.23	min	max	450	max	205
lowering												
Q1	max	0.60					max	0.60				
Lifting end stroke (max. pressure valve adjustment)									max	480	max	235

TILT

Test to be done at 1 m height with Q1 load

Tilting angle value tolerance: ± 0.5°

Std tilting 5° FW; => 6° BW

	degrees/sec		amp		bar	
BW - FW	2.5	3.8	max	55	max	40
FW - BW	2.9	4.6	max	140	max	120
Tilting end stroke Lever control valve			max	150	max	160
Tilting end stroke Electric control valve			max	240	max	240

Std. Travel Sideshift 100 mm: visual check

REMOVAL • INSTALLATION

Note:
The explanation here is for the flow regulator valve for all the mast.

Tightening torque T=Nm

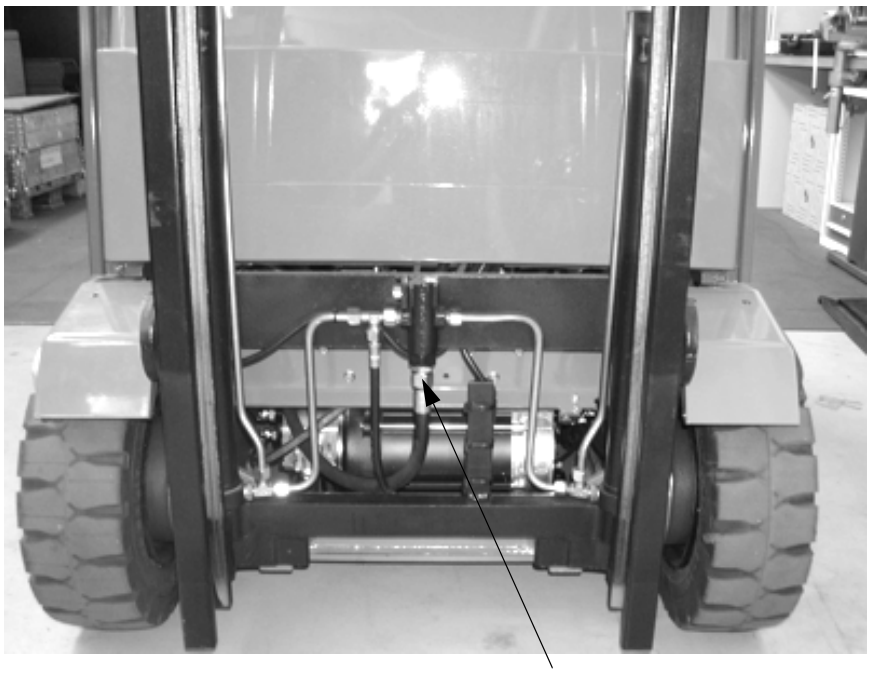

2M TV	3M TV	2M FFL	3M FFL

Removal procedure

1. Set the mast in vertical position and lift it up to reach the valve.
2. Disconnect the battery connector
3. Fix the mast with a chain-belt or with wood blocks in order to avoid the mast lowering.
4. Disconnect the flexible hose that connected to the control valve **A**
5. Remove the lowering valve

Installation procedure

The reassembly procedure is the reverse of the disassembly procedure.

TILTING CYLINDERS

GENERAL

Tightening torque T=Nm

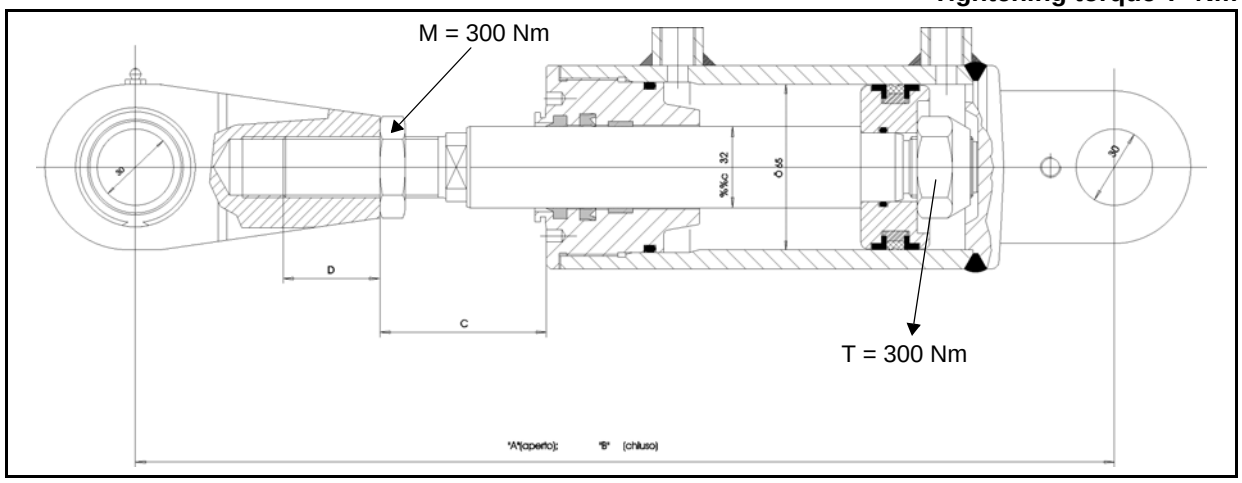

ROD HEAD ADJUSTMENT				
Tilt angle	A (*)	B (**)	C	D
3° forwards - 4° backwards	437.0	395.0	101.5	31.5
3° forwards - 6° backwards	436.5	384.5	77.0	38.0
4° forwards - 5° backwards	442.5	390.5	83.0	32.0
5° forwards - 6° backwards	448.0	384.5	65.5	38.0
6° forwards - 5° backwards	454.0	390.5	71.5	32.0

(*) cylinder open
(**) cylinder closed

SPECIFICATIONS

Cylinder type		Double acting type
Cylinder internal diametermm		65
Rod external diameter	mm	32

COMPONENTS

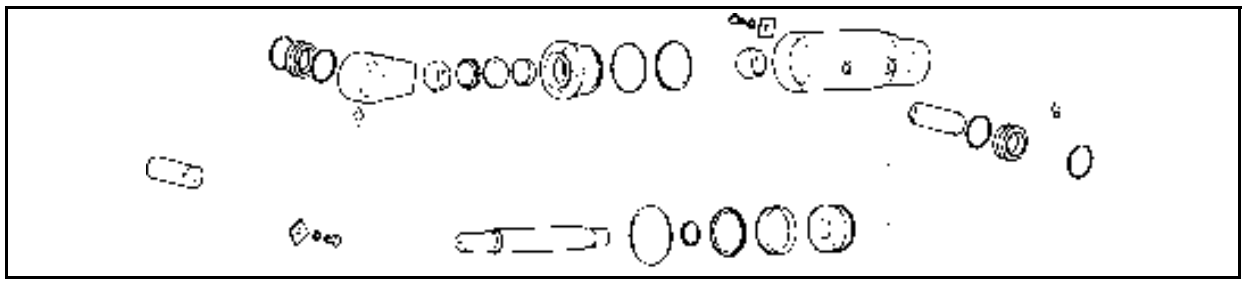

REMOVAL • INSTALLATION

Tightening torque T=Nm

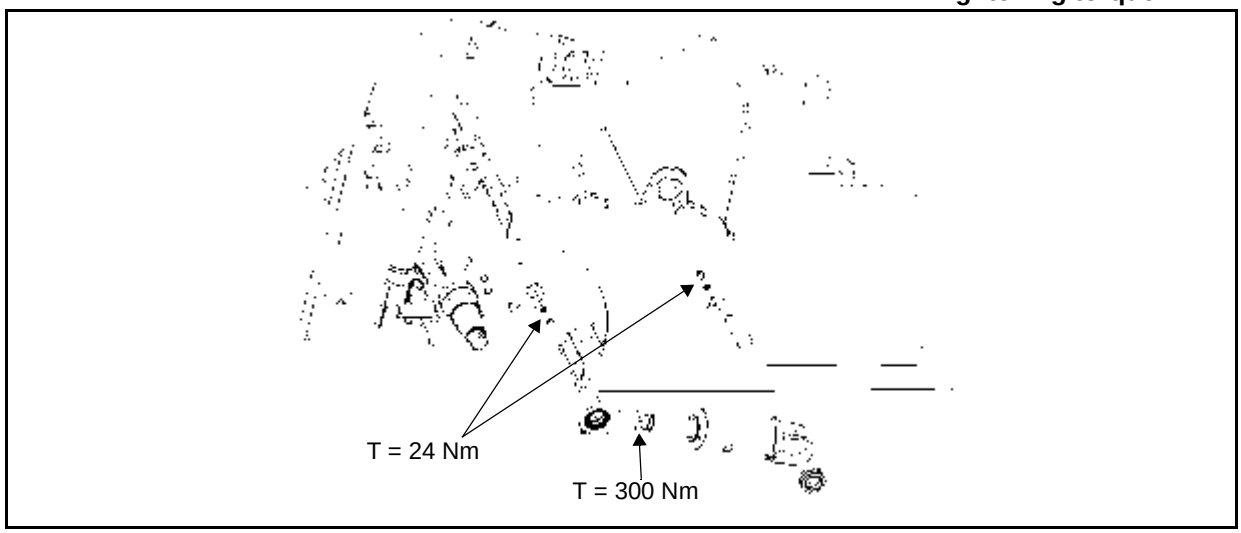

Removal procedure

1. Remove the foot board
2. Set the mast to the vertical position
3. Disconnect the hoses (after lowering the remaining pressure in the tilting cylinders by operating the tilting lever a number of times)
4. Remove the tilting cylinder front pin **[Point 1]**
5. Remove the tilting cylinder rear pin **[Point 2]**
6. Remove the tilting cylinder

Remarks:
If both tilting cylinders are removed fix the mast with a chain in order to avoid the mast overturning

Installation procedure

The reassembly procedure is the reverse of the disassembly procedure.

Remarks:

- **Apply grease to the insertion portions of the tilting cylinder front and rear pins before installation**
- **After installation, slowly tilt the mast forward and backward a few times without charge to bleed the air in the hydraulic circuit and to check the normal functioning**
- **Check the hydraulic oil level and add if insufficient**

Point Operation

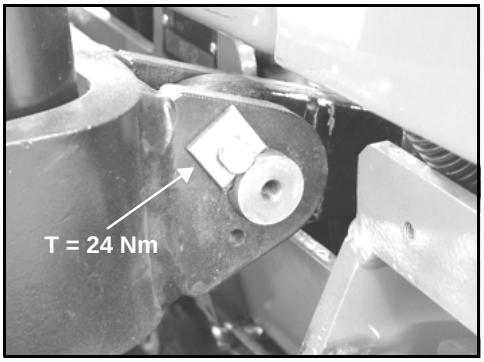

[Point 1]
Disassembly:
Remove the safety screw and then the tilting cylinder front pin

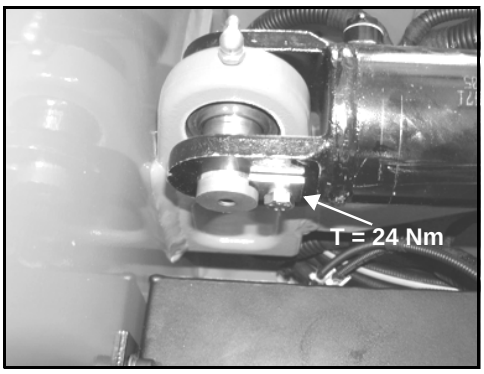

[Point 2]
Disassembly:
Remove the safety screw and then the tilting cylinder rear pin

SETTING

Note:
- **Adjust the mast forward and backward tilting angle (to prevent uneven tilting) when the tilting cylinder and mast are replaced.**

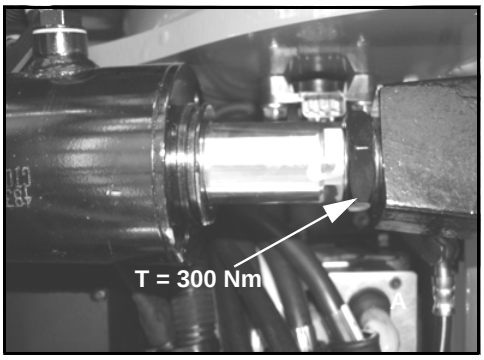

Adjustment:
Turn the tilting cylinder rod with a spanner on the appropriate sense and then tight counter nut with a tightening torque of 300 Nm

TILT CYLINDER GASKETS

DISASSEMBLY • INSPECTION • REASSEMBLY

Tightening torque T=Nm

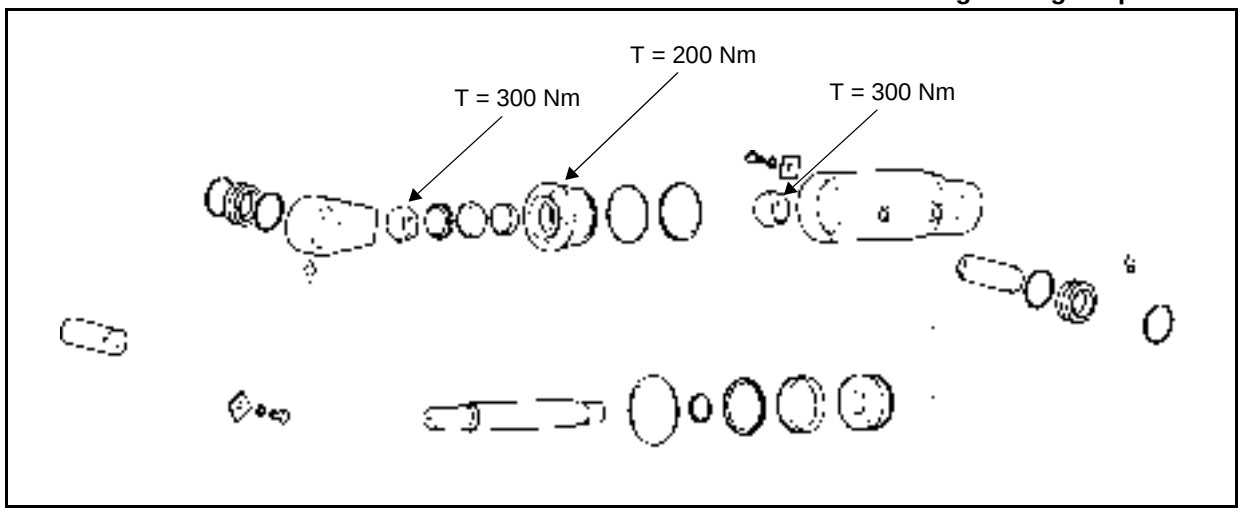

Removal procedure

1. Remove the rod connection
2. Loosen the rod guide **[Point 1]**
3. Extract the piston rod W/piston
4. Loosen the piston nuts
5. Replace the gaskets **[Point 2]**
6. Inspect the piston rod **[Point 3]**

Installation procedure

The reassembly procedure is the reverse of the disassembly procedure.

Remarks:

- **Apply hydraulic oil to gaskets, O-rings and dust seal lips**
- **Apply antioxidant on rod eye threads**
- **Replace the piston nut after every removal procedure**

Point Operation

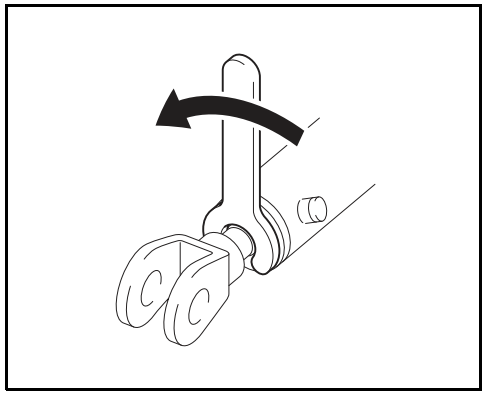

[Point 1]
Disassembly:
Loosen the rod guide

[Point 2]
Disassembly:
Fix the front cylinder connection in a vice and loosen the piston fixing nut

Installation:
Tightening torque = **300 Nm**

Remarks:
During installation insert the cylinder head and the pad on the piston side to prevent damage to the gaskets

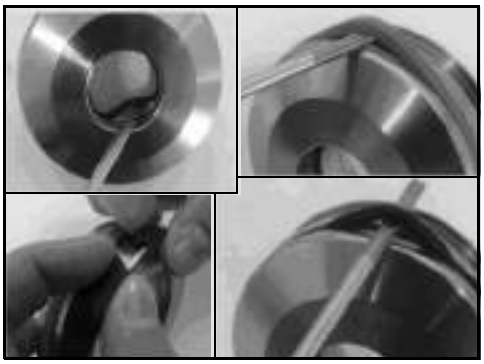

[Point 3]
Disassembly:
Remove the internal and external piston gaskets using a screwdriver; remove the guide ring by hand

Remarks:
Use the screwdriver carefully taking care not to scratch the gasket seat

Installation:
Insert the internal/external gaskets or o-rings as shown to the side, using the SST

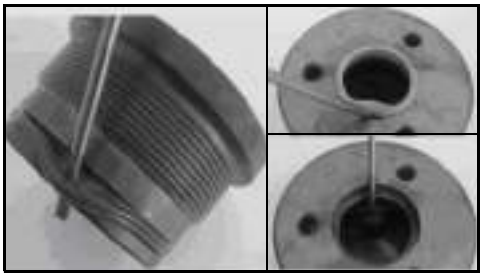

Disassembly:
Remove the internal and external gaskets from the cylinder head using a screwdriver

Remarks:
Use the screwdriver carefully taking care not to scratch the gasket seat

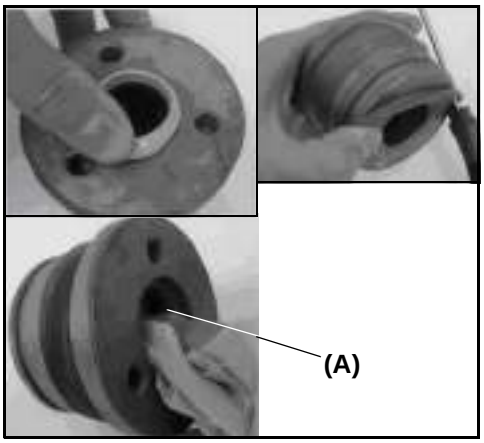

Installation:

Insert the internal/external gaskets or o-rings as shown to the side

Remarks:
Before installing the new gaskets, clean the seat carefully (A)

Installation:

Before re-installing, lubricate the gaskets and o-rings with vaseline

OIL PUMP

Page

GENERAL 13-2
SPECIFICATIONS 13-2
COMPONENTS 13-3
SERVICE PUMP 13-4
TEST METHOD 13-5
MAST PERFORMANCE TABLE 13-6

GENERAL

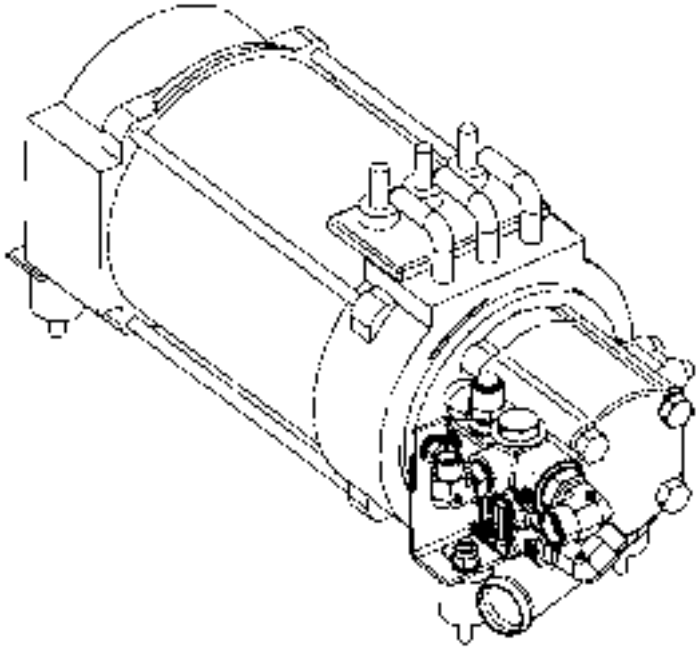

SPECIFICATIONS

Vehicle model		1,0 - 1,25 - 1,5 ton
Oil pump type		Gear pump
Oil pump name		WSP 20-8
Transmission		Direct motor drive
Capacity (pompa a 1500 rpm)	ℓ/m	12,45
Theoretical displacement	cm^3	8,74

COMPONENTS

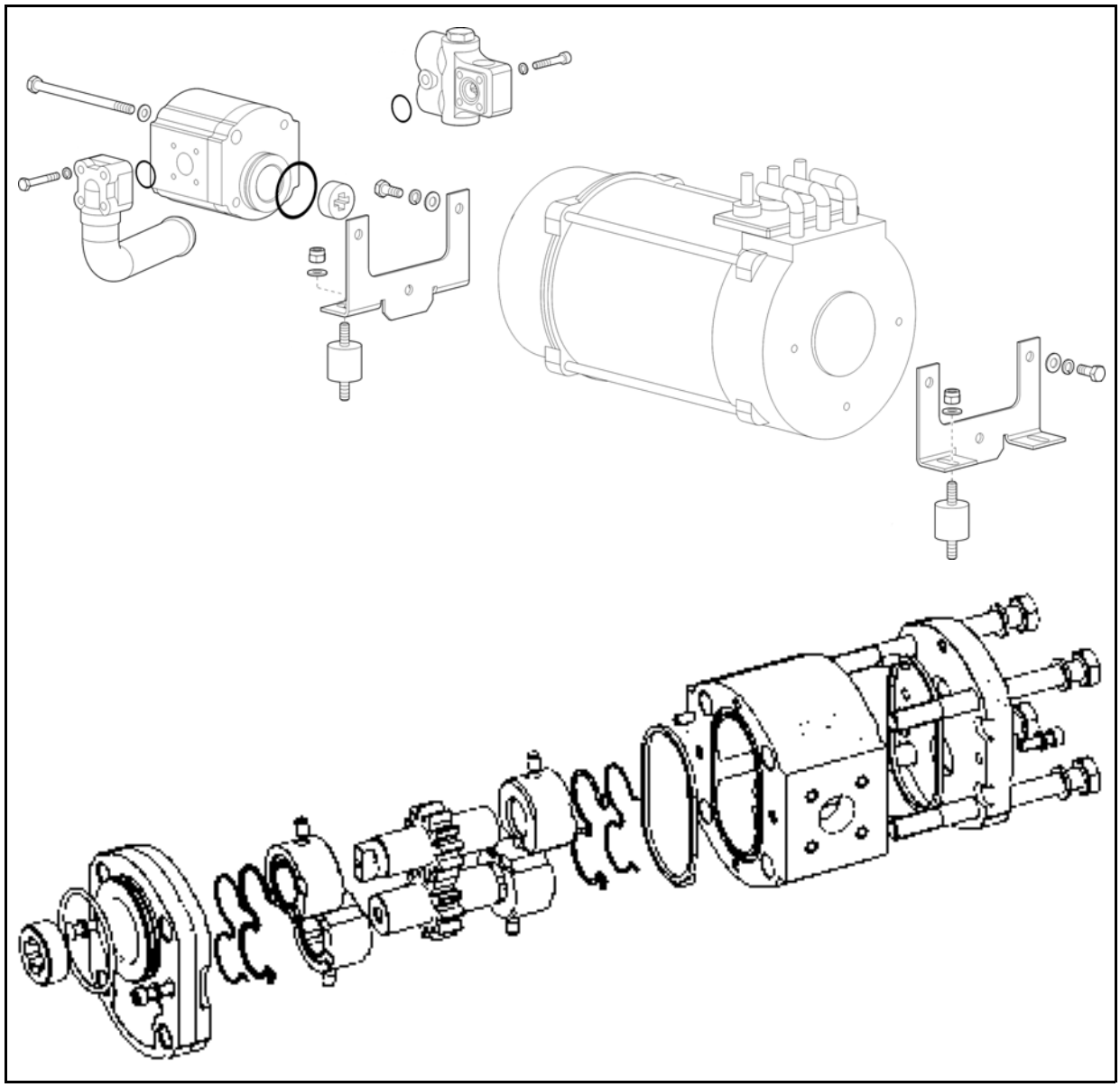

SERVICE PUMP

DISASSEMBLY • REASSEMBLY

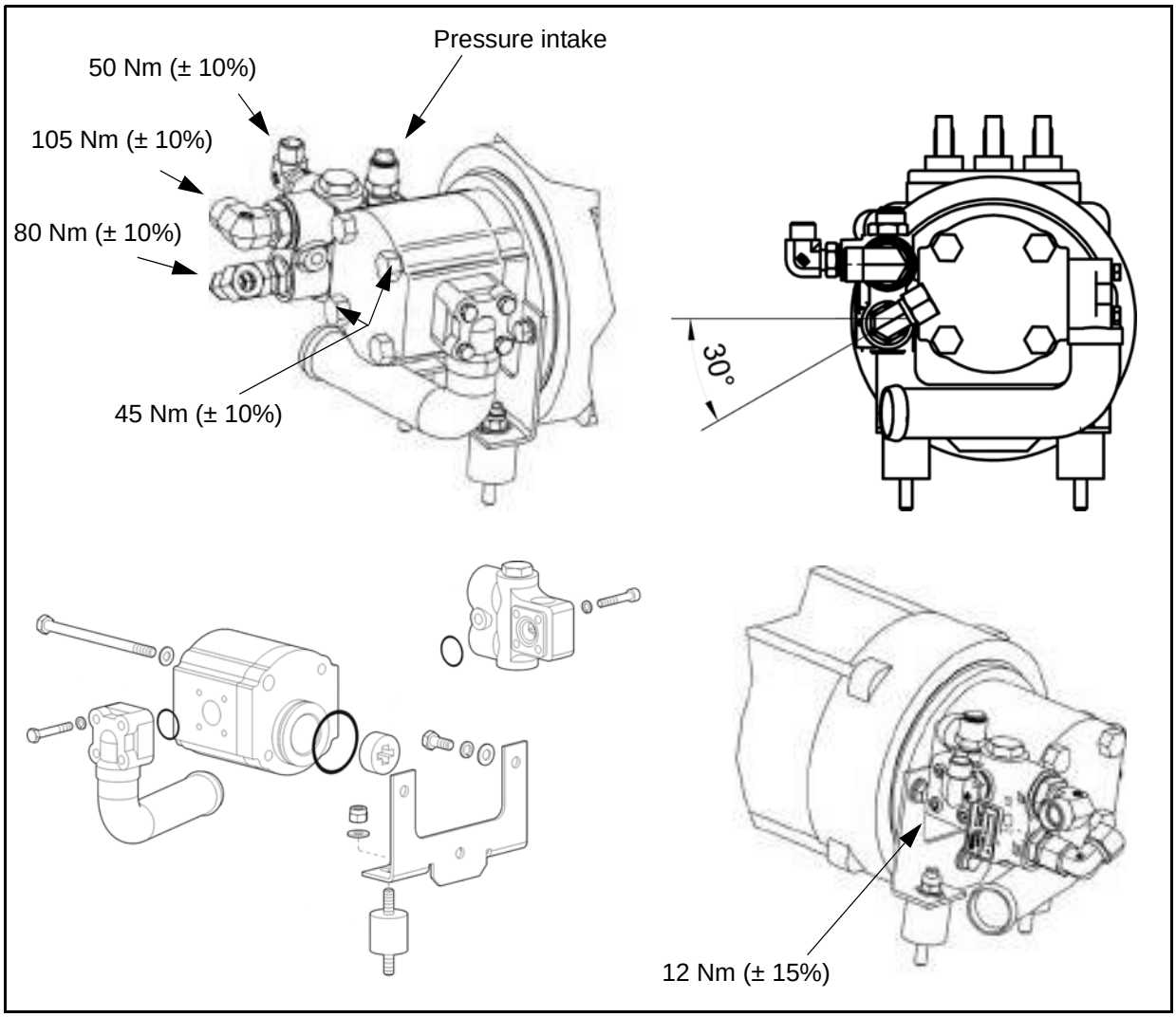

Disassembly Procedure

1. Disconnect the battery plug
2. Remove the foot board
3. Remove the tank cap
4. Drain out the hydraulic oil
5. Disconnect the hoses of the priority valve
6. Disconnect inlet connection of the oil pump (tank - pump) from the connection of the tank
7. Remove the oil pump set bolts of the pump motor

Reassembly Procedure

The reassembly procedure is the reverse of the disassembly procedure.
Tightening torque of the fixing bolts = **45 Nm**

Notes:

- **Before the assemblage, grease the pump-motor coupling. Always before the assemblage, clean the flange of interface between pump and motor.**

TEST METHOD

A bench test should be conducted for strict testing, but as it is generally impossible in practical service operation, install the oil pump on the vehicle and judge the oil pump discharge performance by means of cylinder operation.

- Check that the battery charge is sufficient by observing the battery charge indicators
- Check that the oil control valve set relief pressure is as specified

Lift relief pressure	175 - 235 bar

- Measure the time of full stroke of the lift cylinder, with the hydraulic oil temperature at 50~55°C (122~ 131°F), and calculate the lifting speed; however, due to soft start by the lifting logic unit, lifting speed is 10 ~ 20 mm/sec lower than the value obtained from the table. The lifting speed can be calculated more accurately by measuring the full stroke operation time excluding the soft start period

The lifting speed may differ depending on the conditions of the battery, hydraulic oil temperature and mast adjustment.
The values below are based on a certain condition.

MAST PERFORMANCE TABLE

LIFTING

Q1 max. load Q2 max. load at max. height

Perform the test with the electrolyte density 1.18 ÷ 1.26 Kg/l, electrolyte temperature 20° ÷ 50°, oil temperature 30° ÷ 50° and environment temperature > di 18°C

1.0t

Load	FFL						TV					
Kg	m/sec		amp		bar		m/sec		amp		bar	
Q1	0,25	min	max	330	max	135	0,25	min	max	370	max	145
lowering												
Q1	max	0,60					max	0,60				
Lifting end stroke (max. pressure valve adjustment)									max	410	max	175

1.25t

Load	FFL						TV					
Kg	m/sec		amp		bar		m/sec		amp		bar	
Q1	0,24	min	max	380	max	160	0,24	min	max	410	max	185
lowering												
Q1	max	0,60					max	0,60				
Lifting end stroke (max. pressure valve adjustment)									max	450	max	215

1.5t

Load	FFL						TV					
Kg	m/sec		amp		bar		m/sec		amp		bar	
Q1	0,23	min	max	410	max	180	0,23	min	max	450	max	205
lowering												
Q1	max	0,60					max	0,60				
Lifting end stroke (max. pressure valve adjustment)									max	480	max	235

TILTING

Perform the test to height 1 m and with load = Q1

Tollerance value of tilting angle: ± 0.5°

Tilting Std. = 5° AV; => 6° IN

	degree / sec		amp		bar	
BW - FW	2,5	3,8	max	55	max	40
FW - BW	2,9	4,6	max	140	max	120
Tilting end stroke lever control valve			max	150	max	160
Tilting end stroke electric control valve			max	240	max	240

Std. sideshift stroke 100 mm: visible check

OIL CONTROL VALVE

Page

MECHANICAL CONTROL VALVE 14-2
GENERAL 14-2
CONTROL VALVE 3 WAYS 14-2
CONTROL VALVE 4 WAYS 14-3
HYDRAULIC CIRCUIT MECHANICAL CONTROL VALVE 14-4
SPECIFICATIONS 14-4
MECHANICAL CONTROL VALVE 14-5
RELIEF VALVE ADJUSTMENT 14-7
MAST PERFORMANCE TABLE 14-8
LIFTING LOCKING AND UNLOCKING SCREW 14-9
ELECTRIC CONTROL VALVE (MINILEVER AND JOYSTICKS) 14-10
GENERAL 14-10
COMPONENTS 14-11
HYDRAULIC CIRCUIT ELECTRIC CONTROL VALVE 14-12
SPECIFICATIONS 14-12
ELECTRIC CONTROL VALVE 14-13
PRESSURE RELIEF VALVE ADJUSTMENT 14-14
LIFTING LOCKING AND UNLOCKING SCREW 14-15

MECHANICAL CONTROL VALVE

GENERAL

CONTROL VALVE 3 WAYS

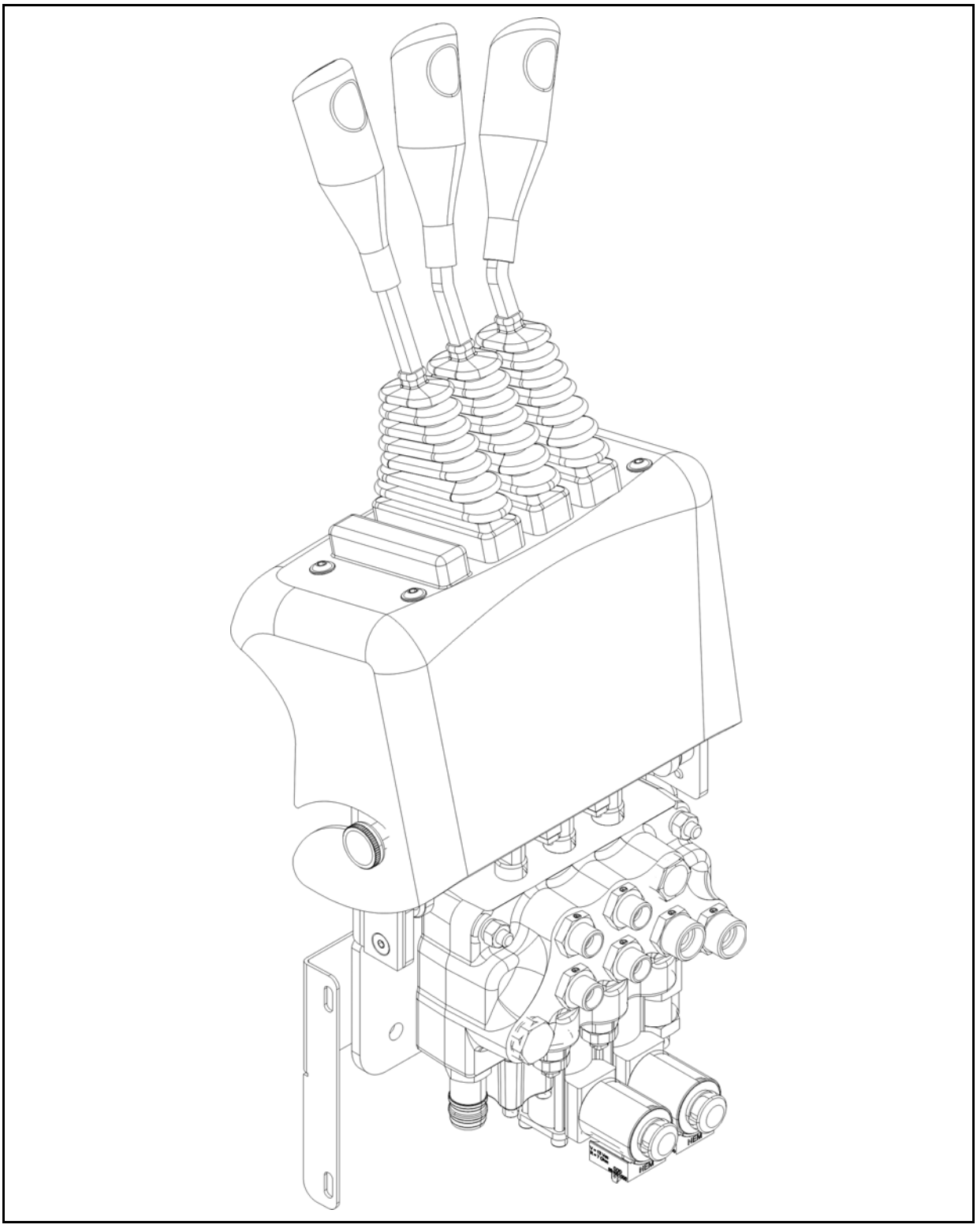

CONTROL VALVE 4 WAYS

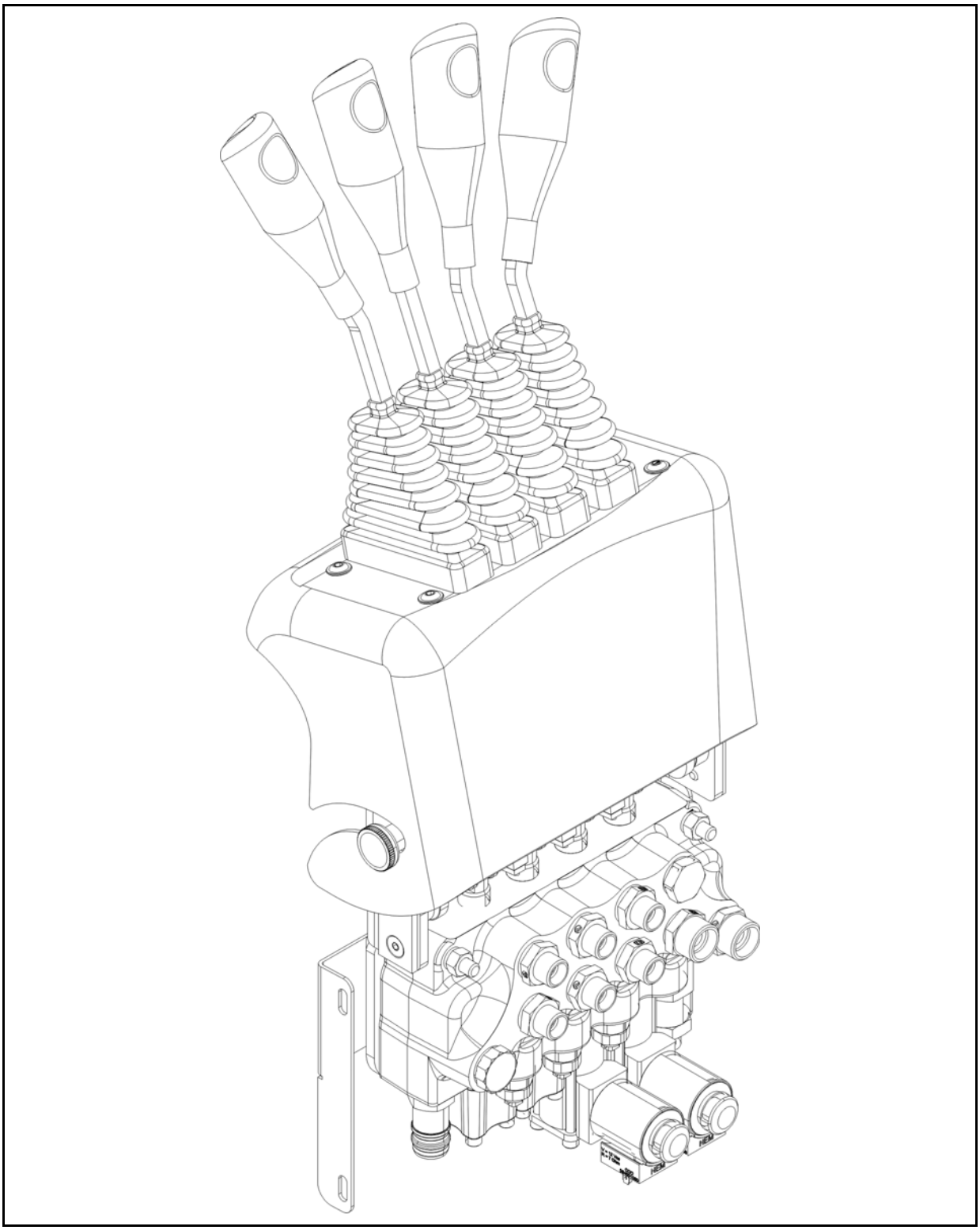

HYDRAULIC CIRCUIT MECHANICAL CONTROL VALVE

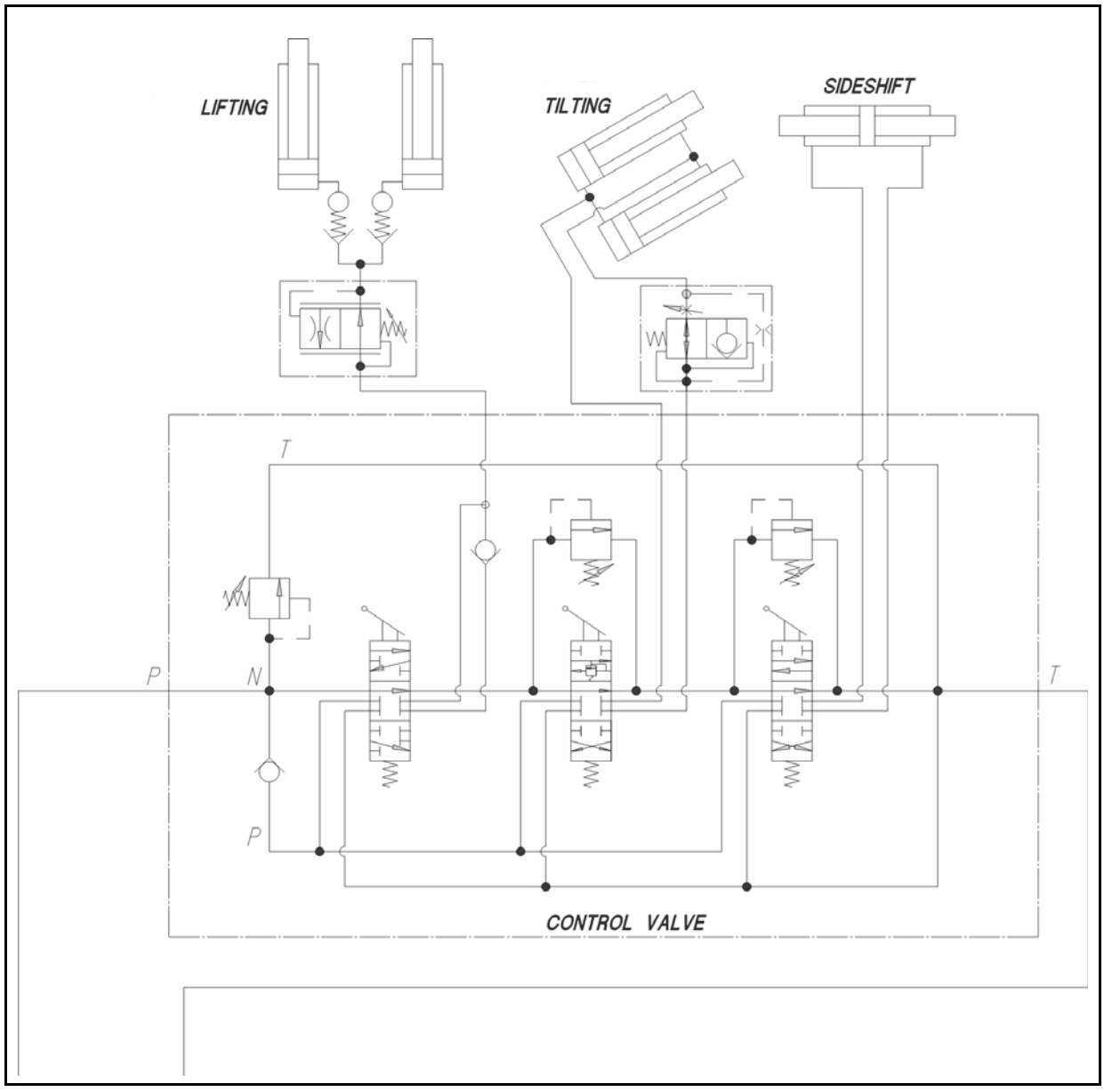

SPECIFICATIONS

Article \ Model		All models
Type		Mechanic
Maximum pressure	Lifting	175 ÷ 235 bar
	Tilting	160 bar
Ther functions		Valvole di blocco sollevamento e brandeggio integrate

MECHANICAL CONTROL VALVE

DISASSEMBLY • REASSEMBLY

Notes:
Operate the control lever to bring the mast and fork to the vertical and lowermost positions, respectively, to release the residual pressure in the material handling system before starting removal.

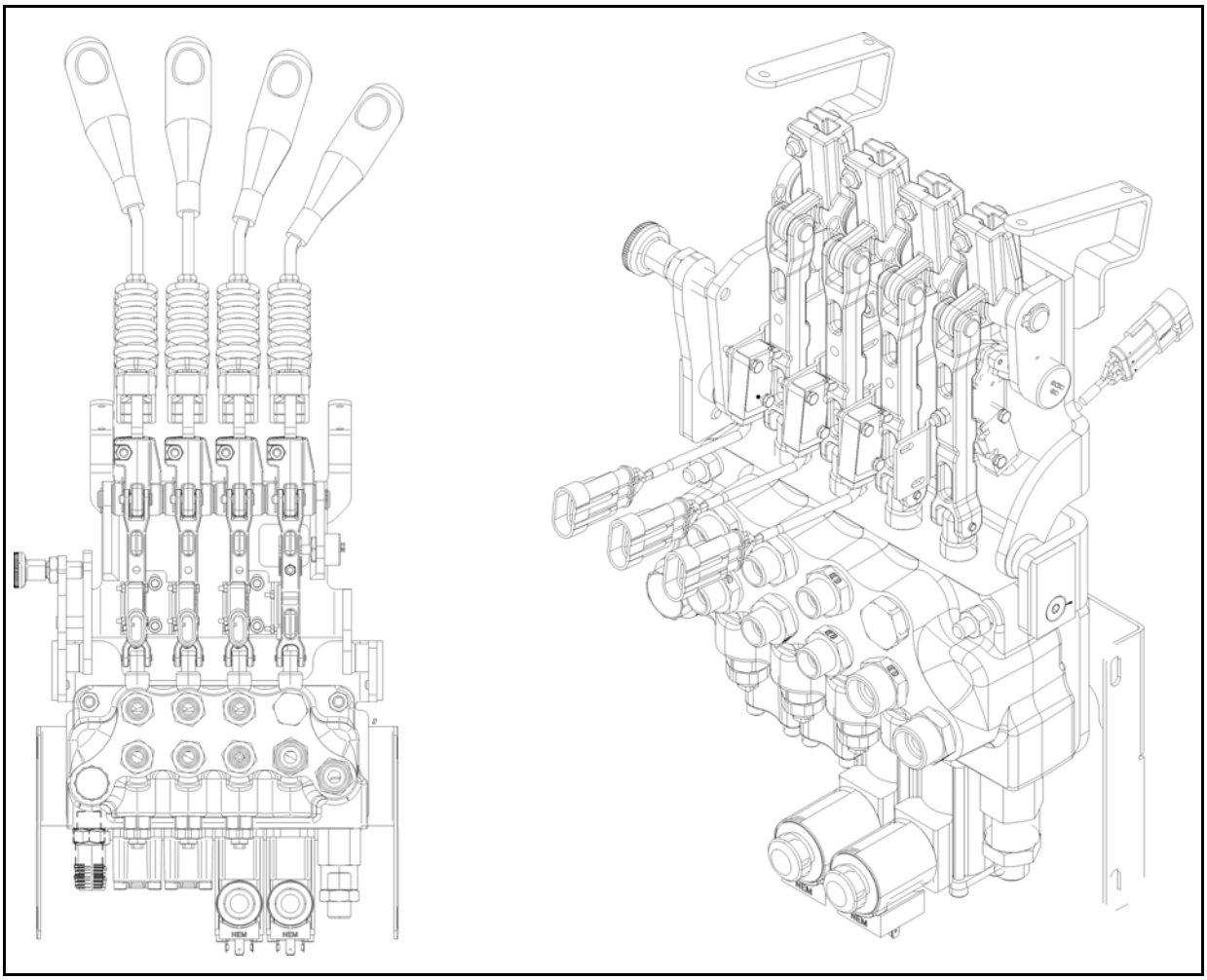

Disassembly Procedure

1. Disconnect the battery plug
2. Remove footboard, lateral plastic cover and tilt forward the control valve cover
3. Disconnect the pipes and the wirings
4. Remove the pin set from control valve and lever **[Point 1]**
5. Remove the control valve

Installation Procedure

The reassembly procedure is the reverse of the disassembly procedure.

Notes:
- **Adjust the limit switch after installing the oil control valve (See [Point 1])**
- **Apply grease to all oil control valve lever linkages**
- **Check the hydraulic oil level, and add if insufficient**

Points Operation

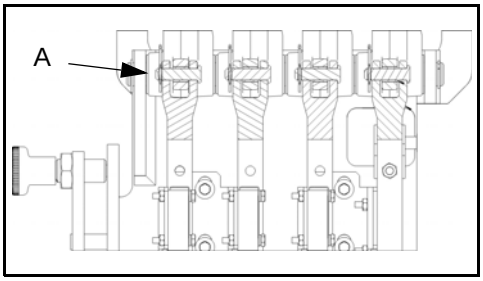

[Point 1]
Disassembly:
Remove the pin **A** of each lever

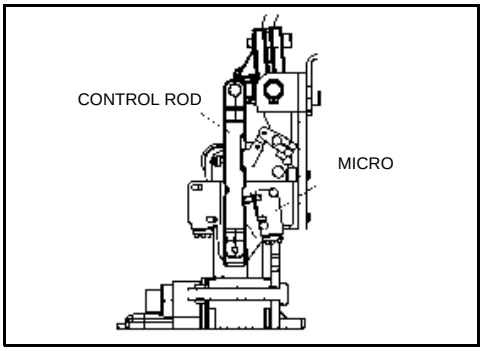

Microswitch adjustment:
After the installation perform the following adjustments:
1. Keep the microswitch in rest position as shown in the drawing according to the following points:
- The castor of the microswitch has to be in contact with the surface of the command rod
- The microswitch lever has to be in contact with the push button of the microswitch, without activating it

2. Tighten the microswitch in order to have the possibility to move it on the button hole of the support.

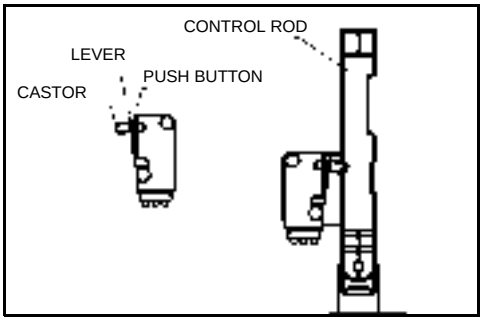

3. Adjust the microswitch position in order to activate it to the minimum stroke of the microswitch lever and by releasing the latter the microswitch has to return in rest position. The activation of the microswitch could be detected:
- by eyes (by checking the angular stroke on the microswitch lever)
- by ears (by listening to the closing of the microswitch contacts)
- by multimeter (by checking the microswitch output signals)

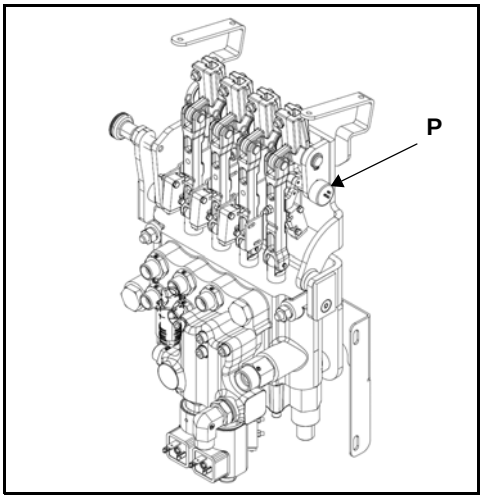

4. Tighten the microswitch screws with a tightening torque of **0.39-0.59** Nm

Adjustment (lifting potentiometer **P**):
after installation, adjust the lifting potentiometer

- assemble the potentiometer on the control valve
- connect an analogic multimeter, setted it at least on the range 10kOhm, to the potentiometer connector pins, in the following way: the red terminal (+) to the pin 2; the black terminal (-) to the pin 3
- move the lifting lever up to the lifiting micro turns off; the value on the multimeter must be 5 kOhm
- After the installation perform the lifting potentiometer adjustment (see chapter 3: Display)

RELIEF VALVE ADJUSTMENT

- **Always follow the procedure below for adjustment. Careless adjustment may cause high-pressure generation, resulting in damage to hydraulic units such as the service pump**
- **No adjustment is needed when the relief valve is not disassembled or the mast is replaced**
- **If the relief valve is replaced, check the maximum pressure according to the mast used**

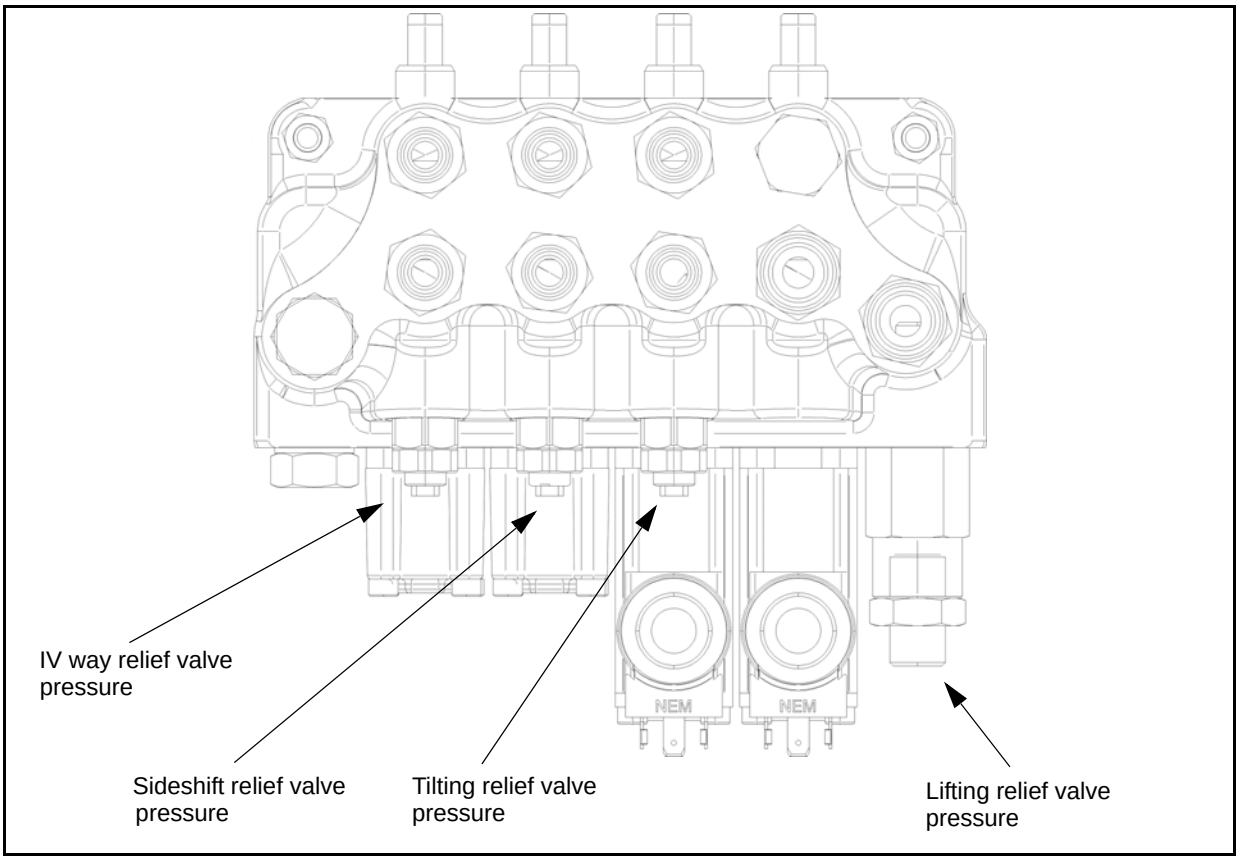

1. Remove the plug of the pressure measuring point on the pump and connect a pressure gauge. Pressure gauge end stroke: 300 bar or more
2. Loosen the counter nut on the relief valve and adjust the screw (allen screw for lifting, square screw for tilting, side shift and other lever)
3. Adjust the oil pressure as follows:
   (a) Turn the key switch ON
   (b) Lift the mast to the end stroke and check the pressure on the pressure gauge (without load)
   (c) Adjust the pressure if necessary bearing in mind that:
   screwing in = increasing of pressure
   screwing out = decreasing of pressure
   (d) Tighten the counter nut when the measured pressure reaches the correct value according to the mast performance table
4. Repeat point 3 for the other functions too (tilting, side shift, …) once each time
5. Remove the pressure gauge and screw in the plug

MAST PERFORMANCE TABLE

LIFTING

Q1 max. load Q2 max. load at max. height

Perform the test with the electrolyte density 1.18 ÷ 1.26 Kg/l, electrolyte temperature 20° ÷ 50°, oil temperature 30° ÷ 50° and environment temperature > di 18°C

1.0t

Load	FFL						TV					
Kg	m/sec		amp		bar		m/sec		amp		bar	
Q1	0,25	min	max	330	max	135	0,25	min	max	370	max	145
lowering												
Q1	max	0,60					max	0,60				
	Lifting end stroke (max. pressure valve adjustment)								max	410	max	175

1.25t

Load	FFL						TV					
Kg	m/sec		amp		bar		m/sec		amp		bar	
Q1	0,24	min	max	380	max	160	0,24	min	max	410	max	185
lowering												
Q1	max	0,60					max	0,60				
	Lifting end stroke (max. pressure valve adjustment)								max	450	max	215

1.5t

Load	FFL						TV					
Kg	m/sec		amp		bar		m/sec		amp		bar	
Q1	0,23	min	max	410	max	180	0,23	min	max	450	max	205
lowering												
Q1	max	0,60					max	0,60				
	Lifting end stroke (max. pressure valve adjustment)								max	480	max	235

TILTING

Perform the test to height 1 m and with load = Q1

Tollerance value of tilting angle: ± 0.5°

Tilting Std. = 5° AV; => 6° IN

	degree / sec		amp		bar	
BW - FW	2,5	3,8	max	55	max	40
FW - BW	2,9	4,6	max	140	max	120
Tilting end stroke lever control valve			max	150	max	160
Tilting end stroke electric control valve			max	240	max	240

Std. sideshift stroke 100 mm: visible check

WARNING:
The installation of a hydraulic control valve finalized to operate a clamp (for example a paper roll) implicates an obligatory application of a double command device avoiding the risk of accidental release of the load (ISO 3691-1, 5.4.4.1).

LIFTING LOCKING AND UNLOCKING SCREW

To be activated when forks can't be lowered due to solenoid valve failure.

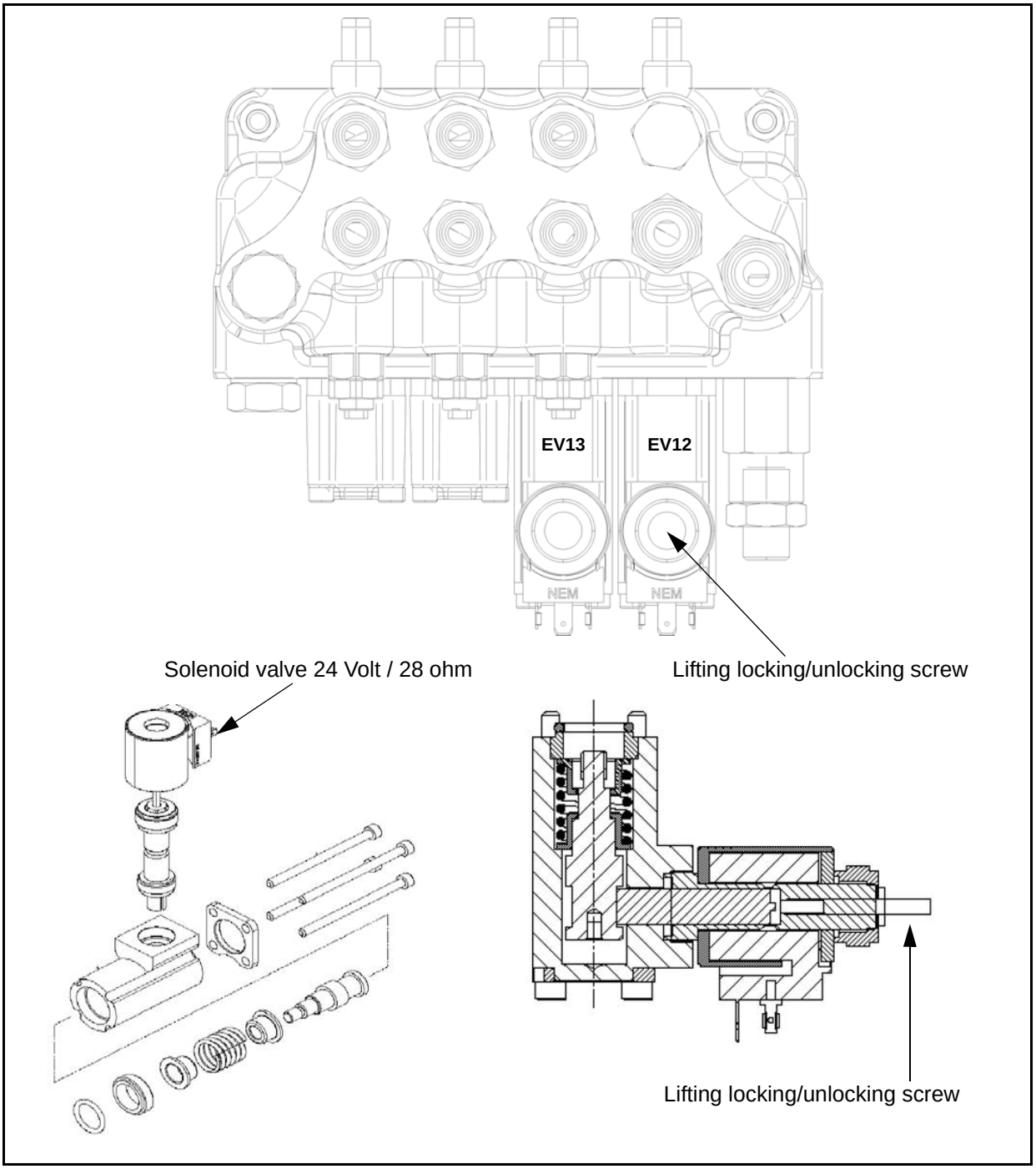

ELECTRIC CONTROL VALVE (MINILEVER AND JOYSTICKS)
GENERAL

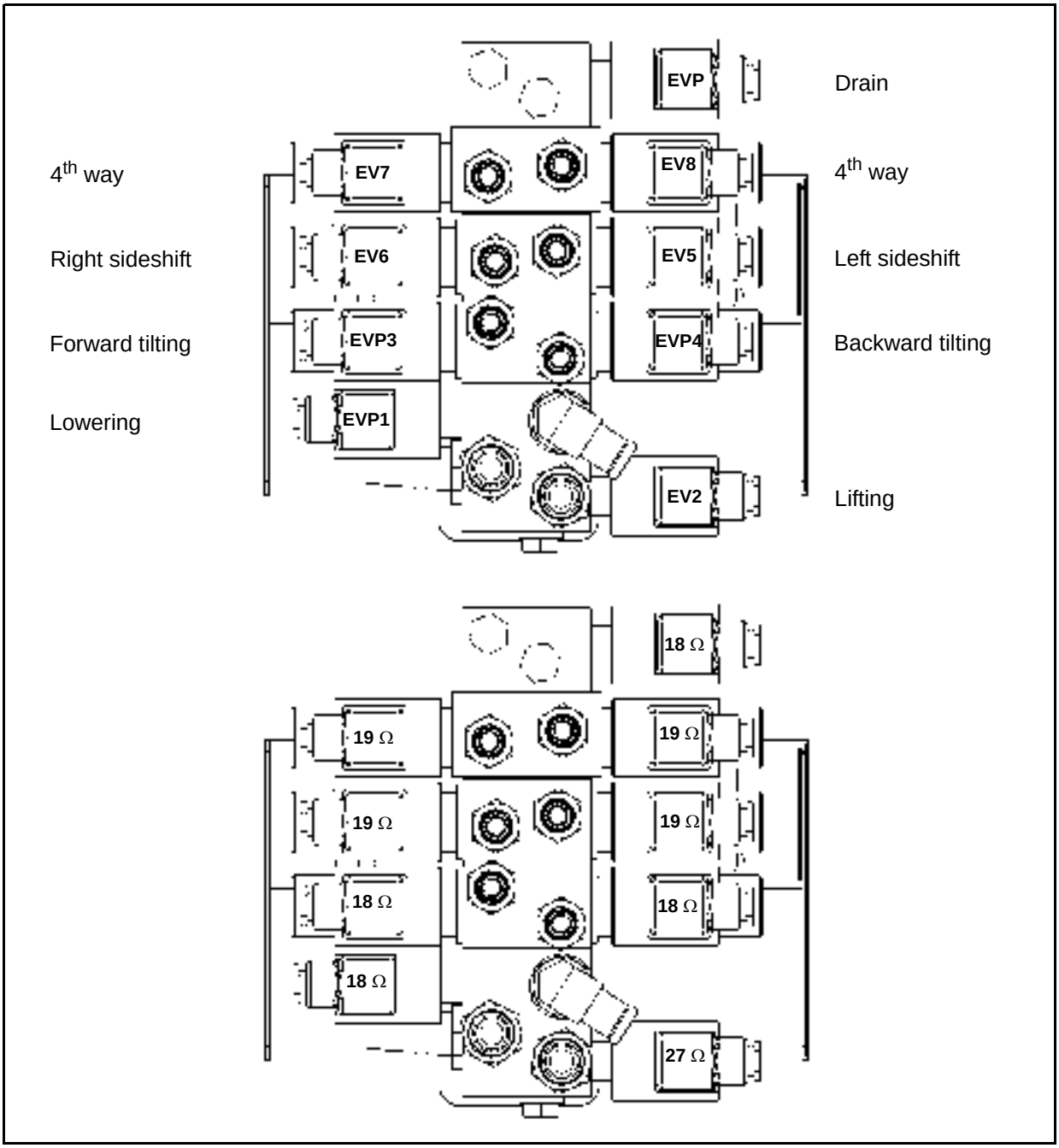

COMPONENTS

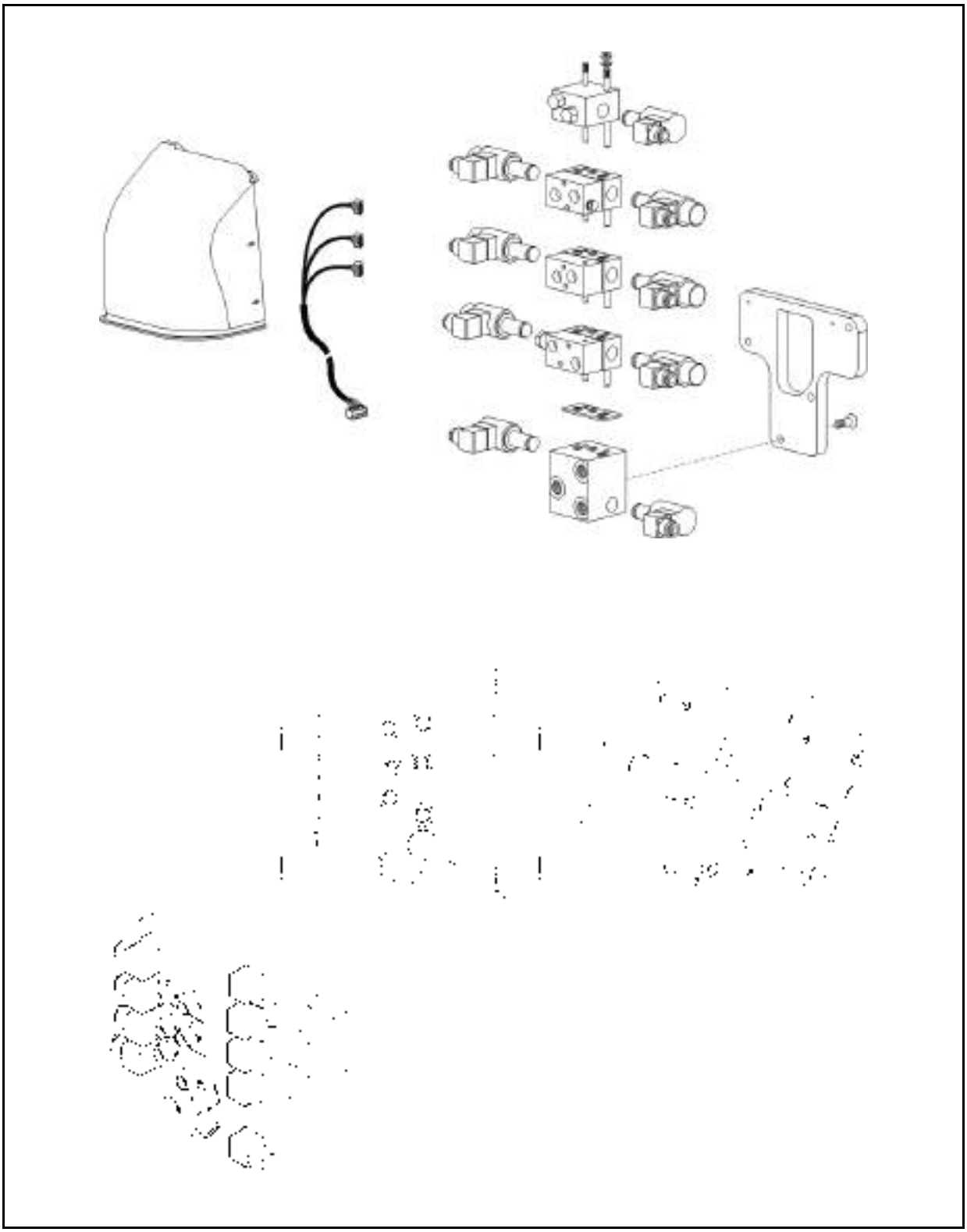

HYDRAULIC CIRCUIT ELECTRIC CONTROL VALVE

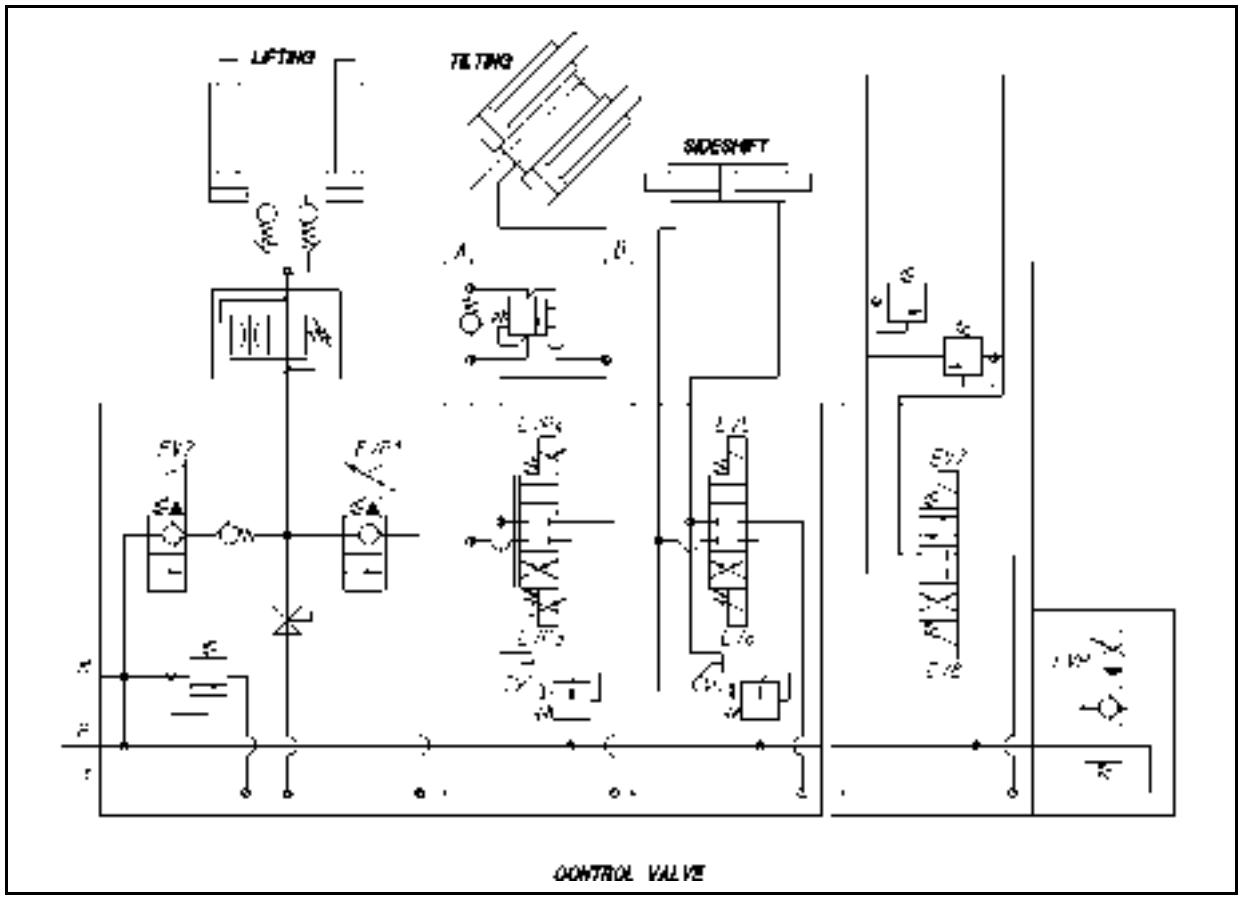

SPECIFICATIONS

Article \ Model	All models
Type	Elettrico
Maximum pressure Bar	175 ÷ 235
Other functions	With proportional solenoid valve type ON / OFF

ELECTRIC CONTROL VALVE
DISASSEMBLY • REASSEMBLY

Nota:
Before starting removal, operate levers in order to bring mast in vertical position and forks to lowest position, releasing the residual pressure in the hydraulic system.

Tightening torque M=Nm

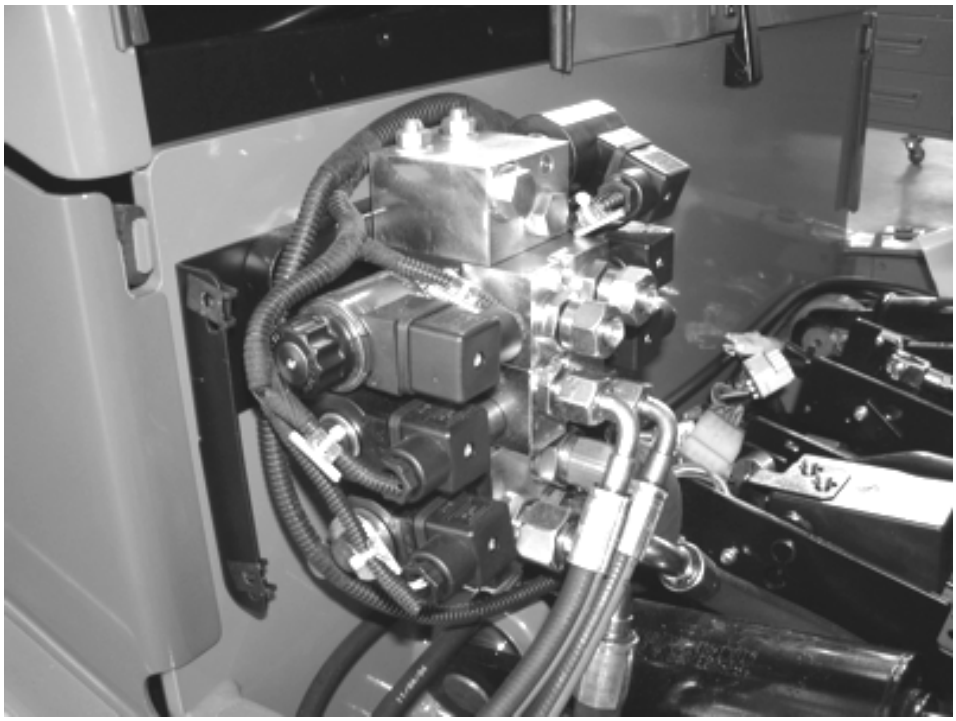

Disassembly Procedure

1. Park the truck on a level surface and activate the parking brake
2. Switch off the truck
3. Open the battery cover and disconnect the battery
4. Remove the footboard and the lateral cover
5. Disconnect the hoses and the wiring harnesses
6. Remove the control valve

Reassembly Procedure

The reassembly procedure is the reverse of the disassembly procedure.

Note:
Check the hydraulic oil level, and top up if insufficient

Caution:
To prevent oil falls on the brakes cover them during the execution of the operations

PRESSURE RELIEF VALVE ADJUSTMENT

Notes:

- **Always follow the procedure below for adjustment. Careless adjustment may cause high-pressure generation, resulting in damage to equipment such as the oil pump.**
- **There is no adjustment if:**
  - **(a) the pressure relief valve is not disassembled**
  - **(b) the pressure relief valve is replaced in conformity with the mast supplied with the vehicle; check the maximum pressure**

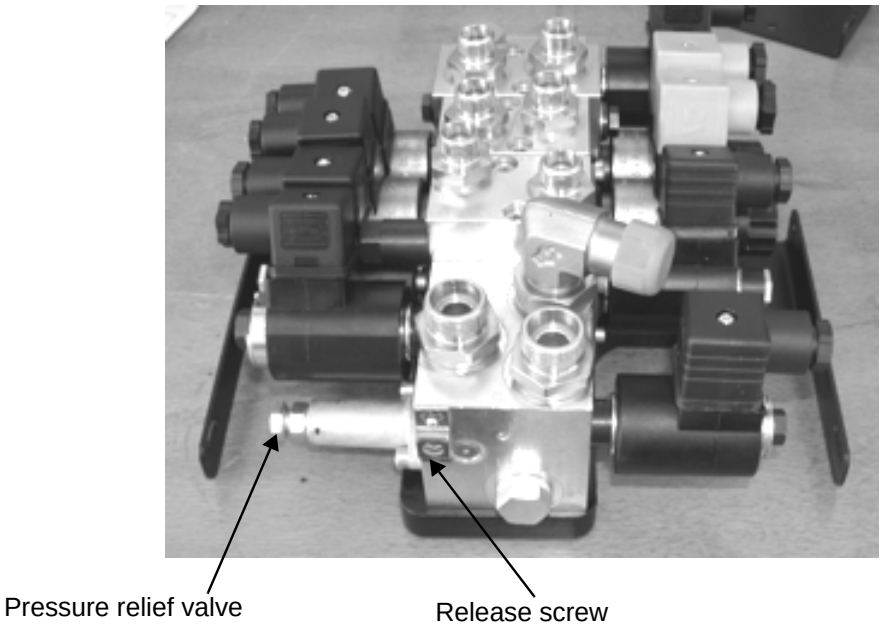

1 Remove the plug of the pressure measuring point on the priority valve and connect a pressure gauge. Pressure gauge end stroke: 300 bar or more.
2 Loosen the counter nut on the relief valve adjustment screw and adjust the screw (only for lifting section).
3 Adjust the oil pressure as follows:
   (a) Turn the key switch ON
   (b) Lift the mast to the end stroke and check the pressure on the pressure gauge (without load)
   (c) Adjust the pressure if necessary bearing in mind that:
   screwing in = increasing of pressure
   screwing out = decreasing of pressure
   (d) Tight the counter nut when the detected pressure reach the correct value according to the table below
4 Remove the pressure gauge and screw in the plug.

LIFTING LOCKING AND UNLOCKING SCREW

T=Nm

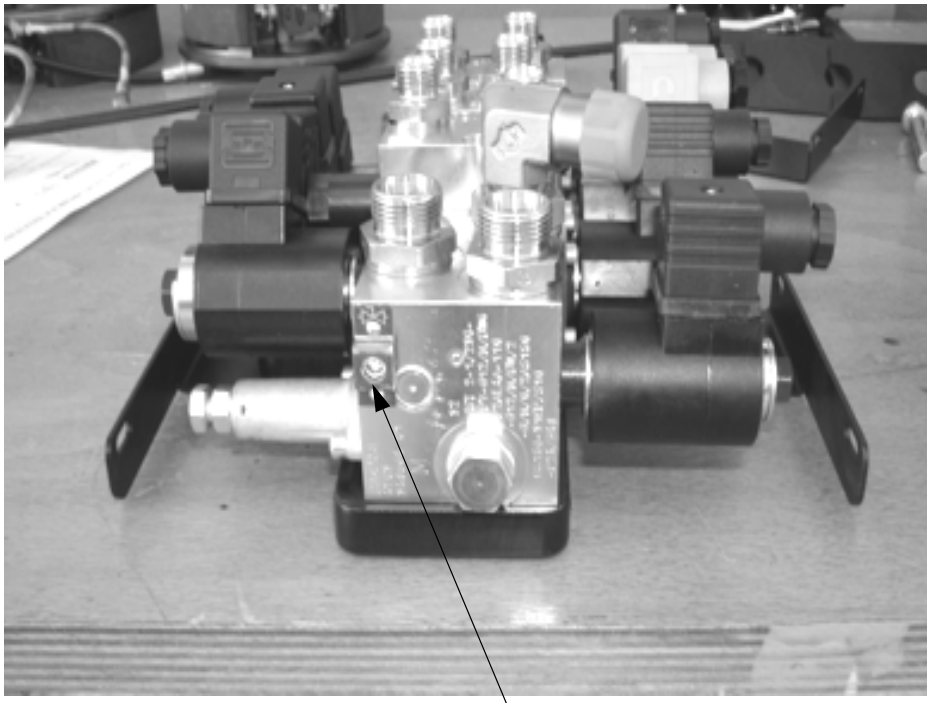

Lifting locking-unlocking screw

- Loosen the lift lock unlocking bolt and operate the lift lever to manually lower the forks.

Notes:
Always retighten the locking bolt after an operation. If lift locking and unlocking bolt is left loose, much hydraulic oil is released from the pump and the lifting speed is significantly decreased, resulting in difficulty in smooth operation.

MAIN OPTIONS

Page

WIRING DIAGRAM OPTIONAL SYSTEMS 15-2

FLASH BEACON 15-4

REVERSE ACOUSTIC WARNING 15-5

WORKING LIGHTS 15-6

COMPLETE LIGHTING SYSTEM 15-7

WIRING DIAGRAM OPTIONAL SYSTEMS

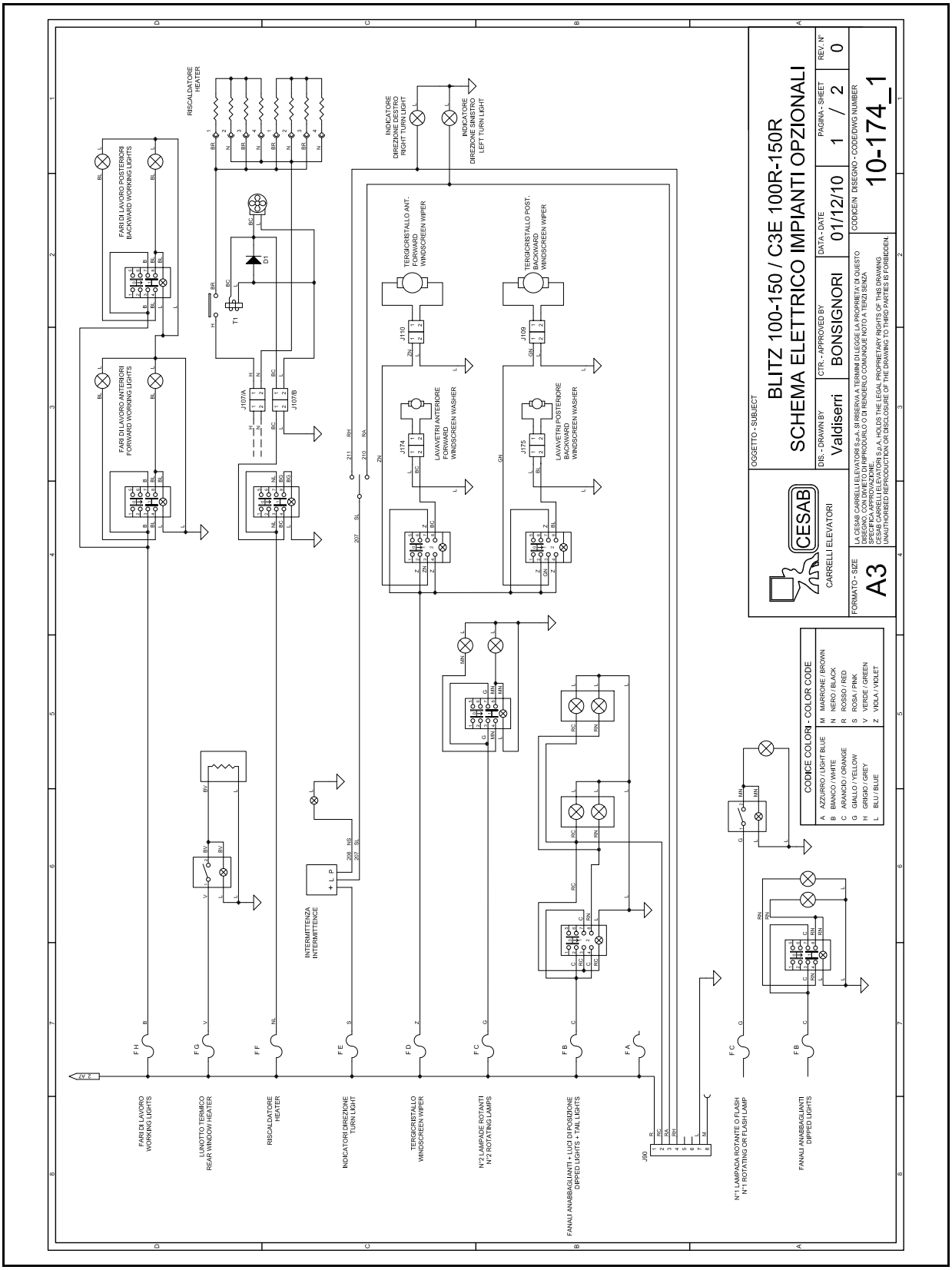

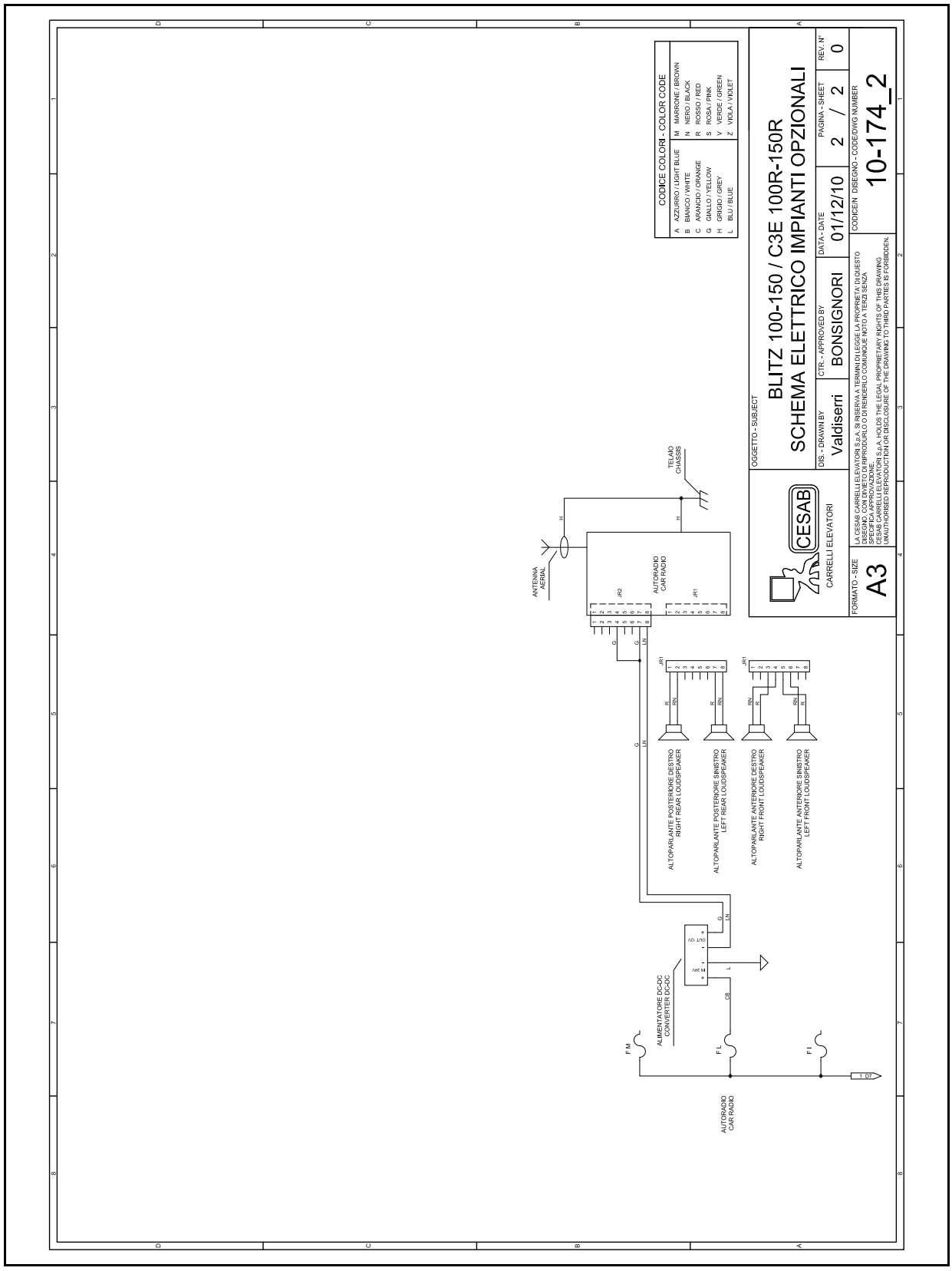
CODICE COLORI - COLOR CODE
A AZZURRO / LIGHT BLUE
B BIANCO / WHITE
C ARANCIO / ORANGE
G GIALLO / YELLOW
H GRIGIO / GREY
L BLU / BLUE
M MARRONE / BROWN
N NERO / BLACK
R ROSSO / RED
S ROSA / PINK
V VERDE / GREEN
Z VIOLA / VIOLET
OGGETTO - SUBJECT
BLITZ 100-150 / C3E 100R-150R
SCHEMA ELETTRICO IMPIANTI OPZIONALI
DIS. - DRAWN BY
Valdiserri
CTR. - APPROVED BY
BONSIGNORI
DATA - DATE
01/12/10
PAGINA - SHEET
2 / 2
REV. N°
0
CESAB
CARRELLI ELEVATORI
FORMATO - SIZE
A3
CODICE/N. DISEGNO - CODE/DWG NUMBER
10-174_2
AUTORADIO
CAR RADIO
ANTENNA
AERIAL
TELAIO
CHASSIS
ALIMENTATORE DC-DC
CONVERTER DC-DC
ALTOPARLANTE POSTERIORE DESTRO
RIGHT REAR LOUDSPEAKER
ALTOPARLANTE POSTERIORE SINISTRO
LEFT REAR LOUDSPEAKER
ALTOPARLANTE ANTERIORE DESTRO
RIGHT FRONT LOUDSPEAKER
ALTOPARLANTE ANTERIORE SINISTRO
LEFT FRONT LOUDSPEAKER

FLASH BEACON

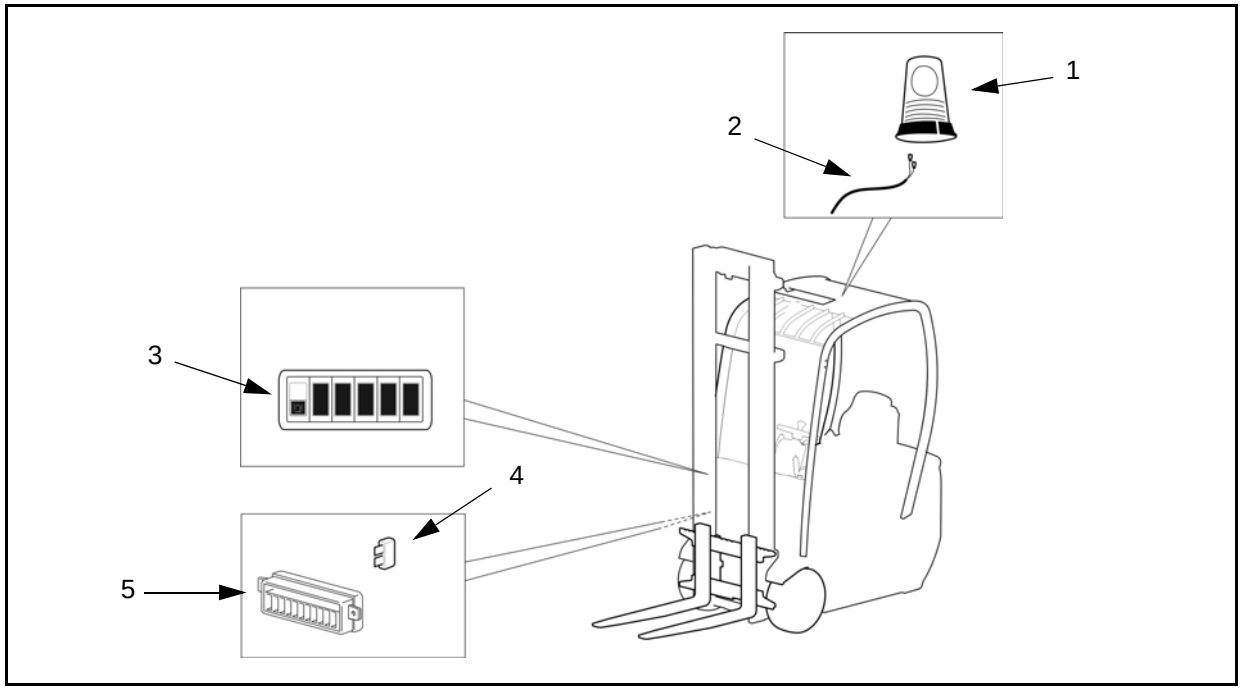

1	Flash beacon 10 ÷ 100V	4	Fuse 2A
2	Wiring	5	Fuse board 24V
3	Push-button		

DISASSEMBLY • REASSEMBLY

Reassembly Procedure

1. Pass the beacon wiring inside the overhead guard bringing it out through the left front leg
2. Connect the beacon wiring to the fuse board 24V
3. Insert a fuse (2A) on the fuse board (pos. 3)
4. Assembly the push-button on the dashboard and connect it to the wiring
5. Connect the wiring to the flash beacon
6. Fix the lamp to the overhead guard

Disassembly Procedure

The disassembly procedure is the reverse of the reassembly procedure.

REVERSE ACOUSTIC WARNING

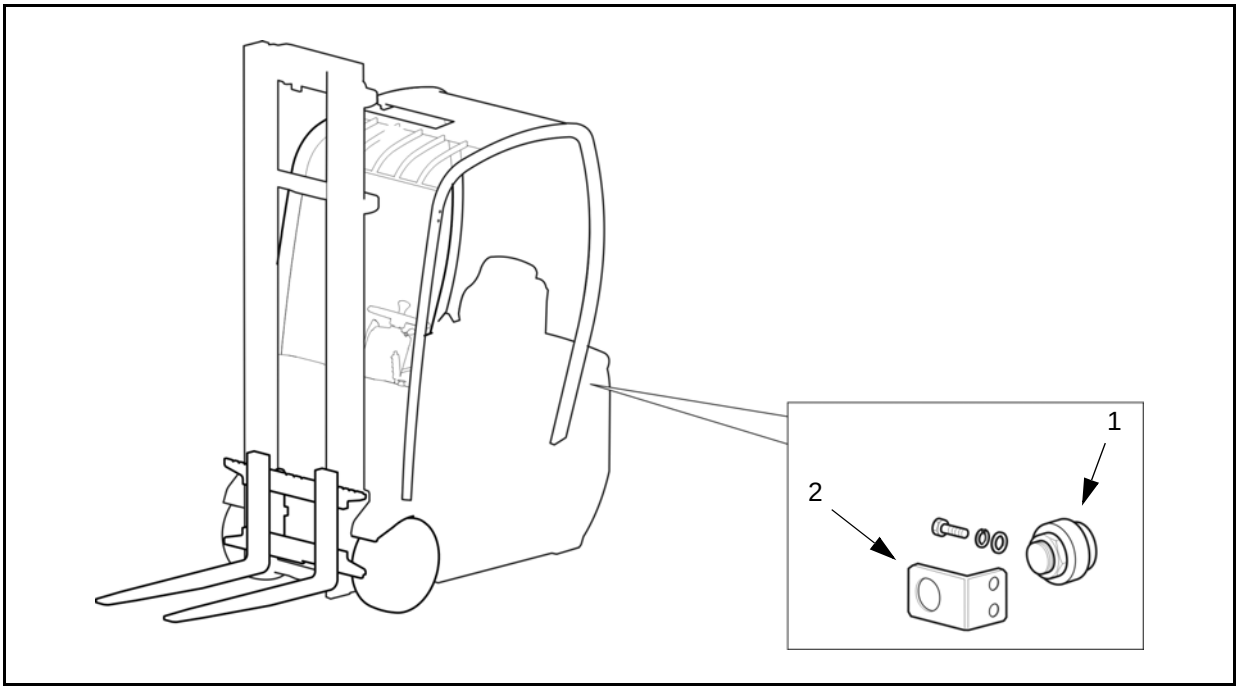

1	Reverse acoustic warning	2	Clamp

DISASSEMBLY • REASSEMBLY

Reassembly Procedure

1. Remove the rear metallic cover
2. Fix the clamp to the chassis (rear compartment, left side)
3. Fix the reverse acoustic warning to the clamp
4. Connect the reverse acoustic warning to the wiring (J71 connector)

Disassembly Procedure

The disassembly procedure is the reverse of the reassembly procedure.

WORKING LIGHTS

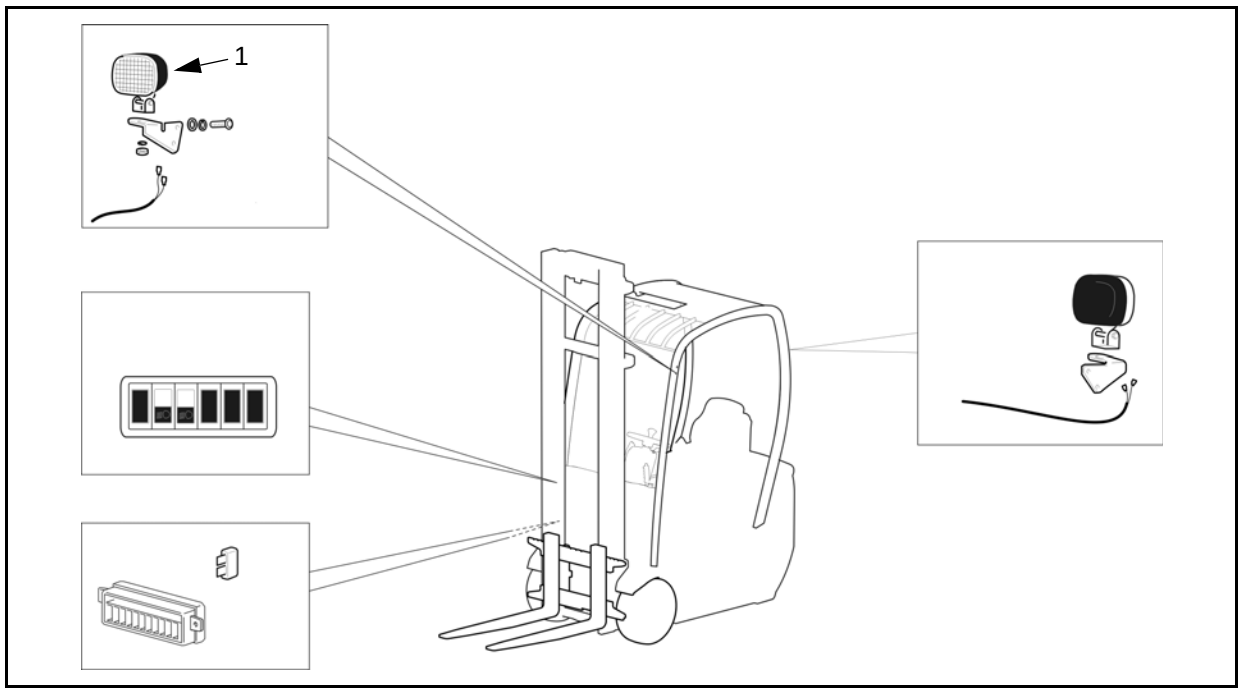

1	Working lights 24V 70W		Fuse 7,5A
	Wiring		Fuse board 24V
	Push-button		

DISASSEMBLY • REASSEMBLY

Reassembly Procedure

1. Pass the working lights inside the overhead guard bringing it out through the front legs
2. Connect the wiring to the fuse board 24V
3. Insert the fuse (7,5A) on the fuse board (pos. 8)
4. Assembly the push-button on the dashboard and connect it to the wiring
5. Connect the wiring to the working lights
6. Fix the working lights to the clamp and then fix the clamp to the overhead guard

Disassembly Procedure

The disassembly procedure is the reverse of the reassembly procedure.

COMPLETE LIGHTING SYSTEM

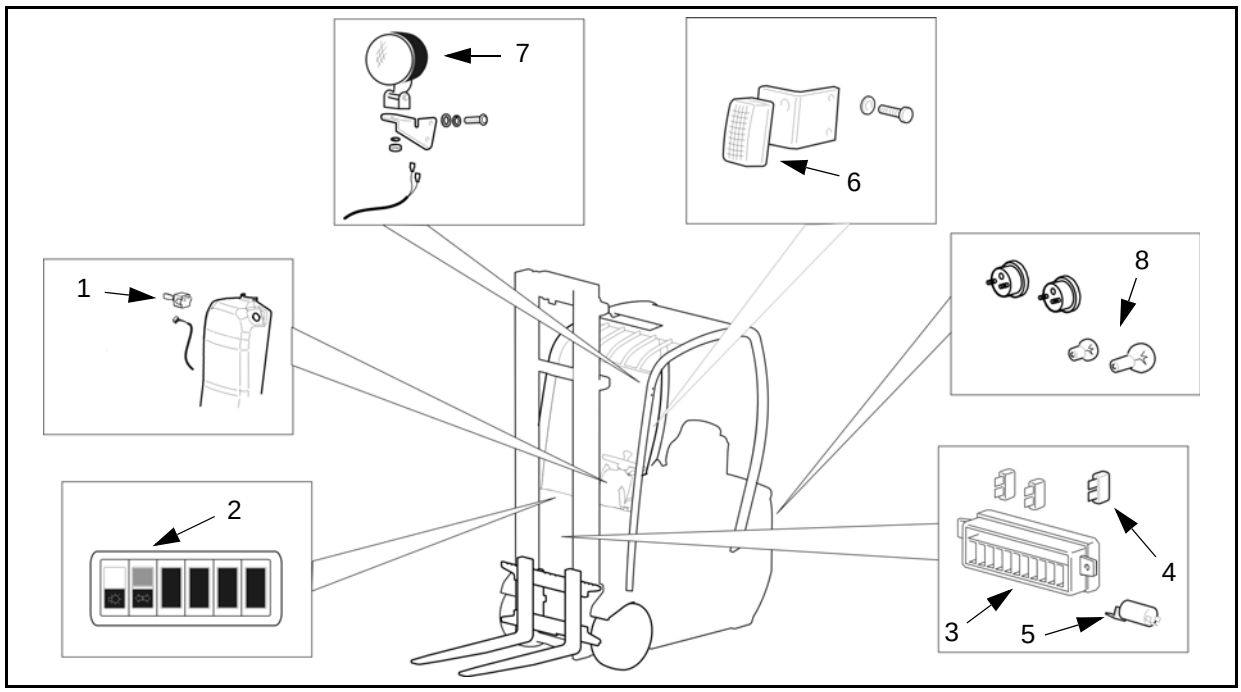

1	Selector	5	Flashing
2	Push button	6	Indicator
3	Fuse board 24V	7	Light
4	Fuse	8	Bulb

DISASSEMBLY • REASSEMBLY

Reassembly Procedure

1. Add two bulbs to the rear lights (indicators)
2. Pass the lights and the indicators inside the overhead guard bringing it out through the front legs
3. Connect the wiring to the fuse board 24V
4. Insert the fuse (5A) on the fuse board (pos. 5)
5. Insert the fuse (7,5A) on the fuse board (pos. 2)
6. Assembly the push-buttons on the dashboard and connect it to the wiring
7. Connect the wiring to the lights
8. Fix the lights to the clamp and then fix the clamp to the overhead guard

Disassembly Procedure

The disassembly procedure is the reverse of the reassembly procedure.

PROGRAMMER

Page

PROGRAMMER..... 16-2

GENERAL 16-2

PROGRAMMER CONNECTION BY CAN-BUS 16-4

COLLEGAMENTO PROGRAMMATORE VIA SERIALE.....16-5

PROGRAMMER FUNCTION.....16-6

AUTO MODE 16-6

MANUAL MODE.....16-8

SAVE FUNCTION..... 16-11

RESTORE FUNCTION 16-14

DELETE FUNCTION 16-17

INFORMATION MESSAGES 16-19

SERIAL CONNECTION.....16-20

SD CARD SOFTWARE UPDATE.....16-23

PROGRAMMER

GENERAL

The programmer allows programming of the logic units and cards on the truck.

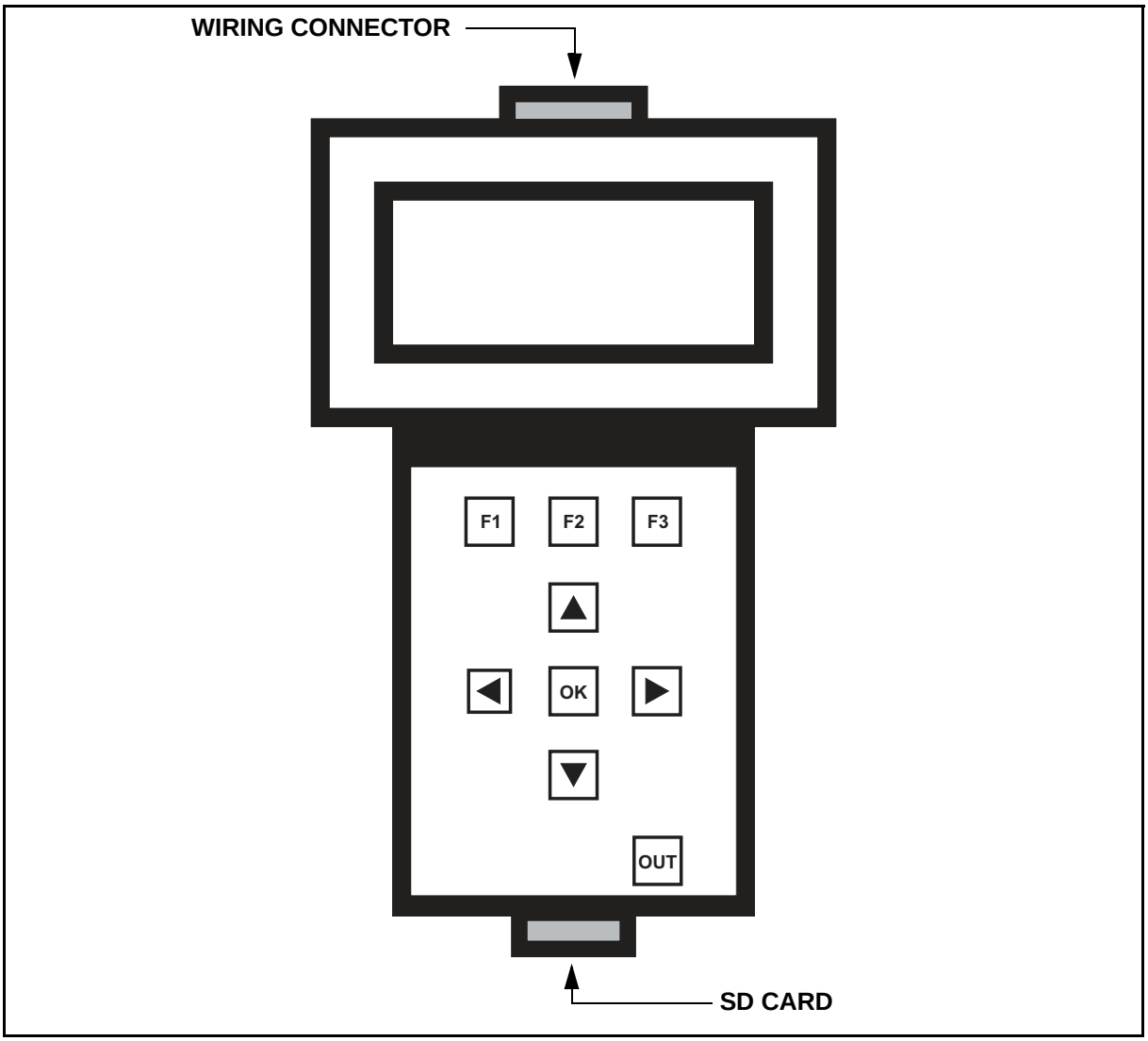

FUNCTIONS

PROGRAMMER → for updating software
SAVE/RESTORE → for saving/copying operator profiles

LEGEND

	Function buttons
	Possible choices
	Confirm choice
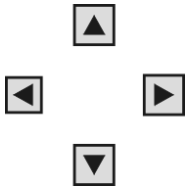	Change screen
	Confirm
	Return to previous screen
OLD	Software version out of date
UPDATE	Software version updated
NOT CONNECTED	Card not connected or not powered

PROGRAMMER CONNECTION BY CAN-BUS

Procedure

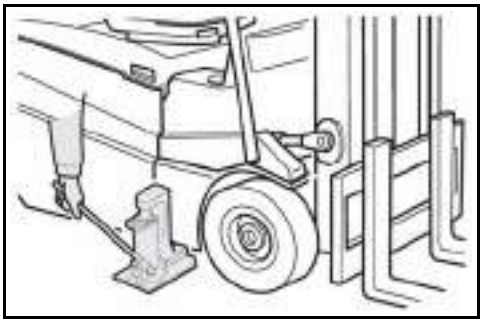

1. Put the truck in a safe position, parking it on a flat surface and raising the drive wheels

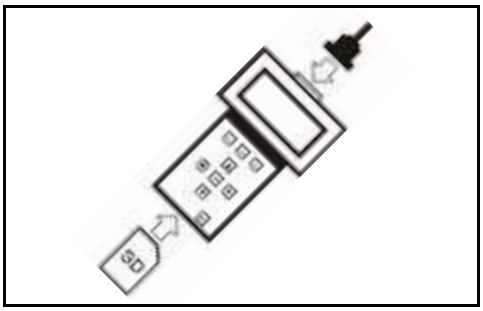

2. Insert the SD card in the programmer and connect the interface wiring

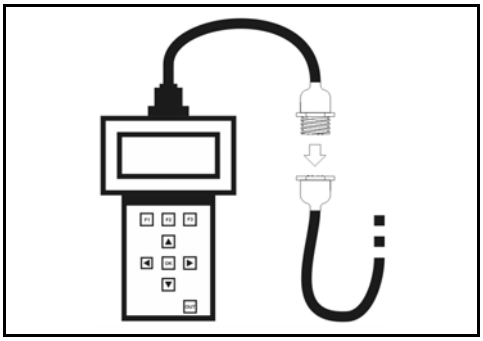

3. Connect the CAN-BUS connector of the programmer to the CAN-BUS connector (J132) of the truck, located under the display

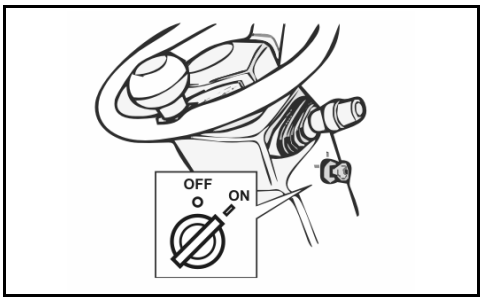

4. Turn on the truck

PROGRAMMER SERIAL CONNECTION

Procedure

1. Put the truck in a safe position, parking it on a flat surface and raising the drive wheels

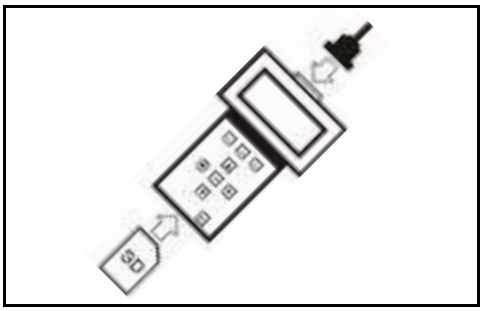

2. Insert the SD card in the programmer and connect the interface wiring

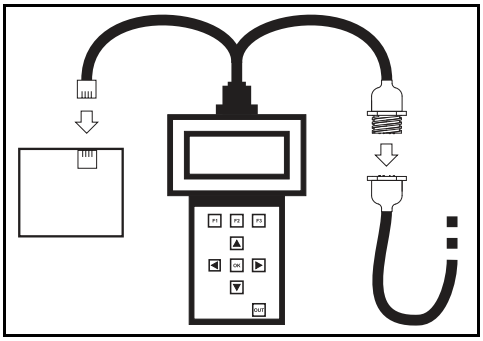

3. Connect the CAN-BUS connector of the programmer to the CAN-BUS connector (J132) of the truck, located under the display

4. Connect the serial connector of the programmer to the serial connector of the card to be programmed

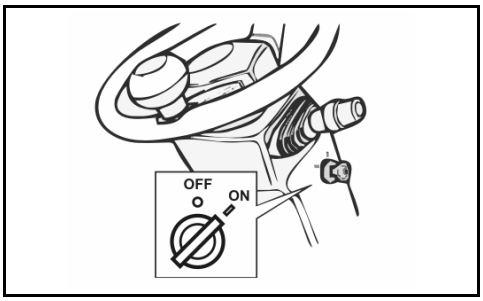

5. Connect the card to be programmed to the machine wiring, ensuring that it receives power, and turn on the truck

PROGRAMMER FUNCTION

The programmer function allows the updating of the software present in the logic units and cards on the truck. It is possible to update the cards in two different ways:

- **AUTO** the programmer automatically recognizes the truck and the latest software version to be installed.
- **MANUAL** for selecting the truck family and the software version you intend to install; in MANUAL mode it is also possible to install previous versions of the software.

AUTO MODE

Procedure

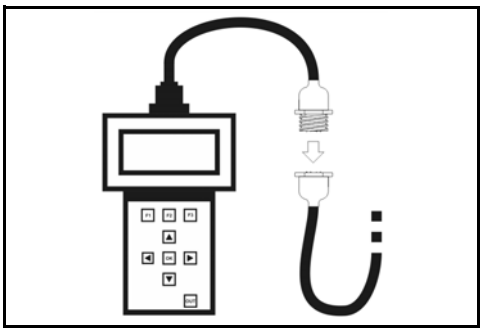

1. Connect the programmer and turn on the truck (see specific paragraph)

   Wait a few seconds for the data to load

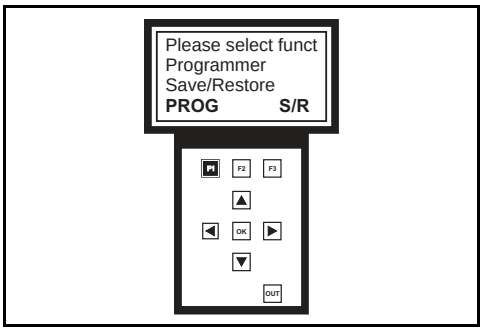

2. Press **F1** to select the Programmer function

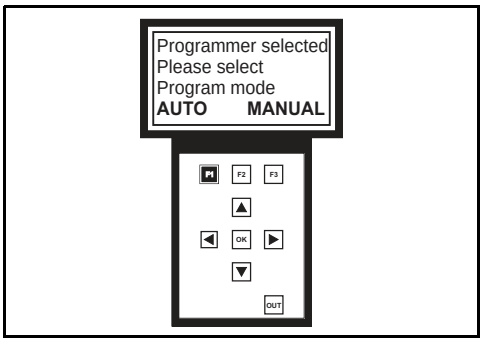

3. Press **F1** to select Auto mode

   Wait a few seconds for the data to load

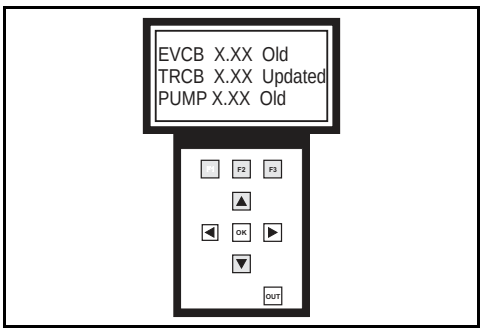

4. Use the buttons ▲ ▼ to change screen and view the cards present on the truck

   Use the buttons F1 F2 F3 to select the card to be updated

   F1 ⟶ selects line 1
   F2 ⟶ selects line 2
   F3 ⟶ selects line 3

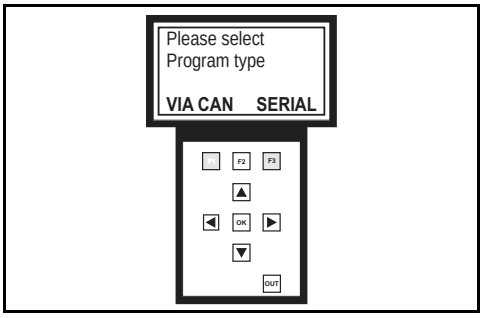

5. Press **F1** to select programming by **CAN-BUS**

   Press **F**3 to select programming by **SERIAL CONNECTION**

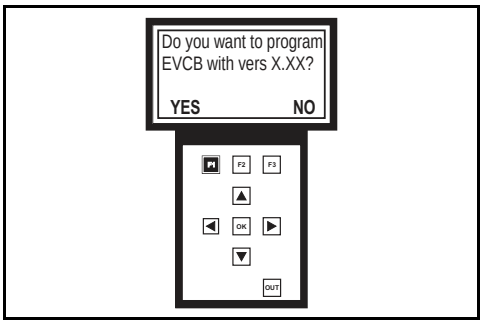

6. Press **F1** to confirm your choice and start programming

   Press **F3** to return to the previous screen

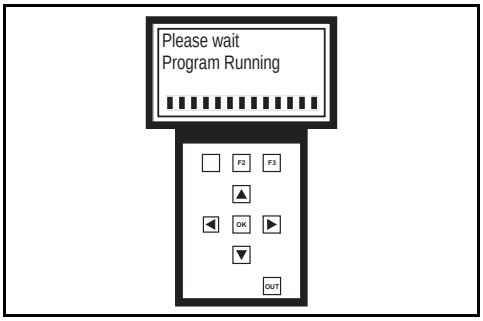

7. Wait until the end of programming

Note:
Do not turn off the truck, disconnect the programmer or the battery during programming

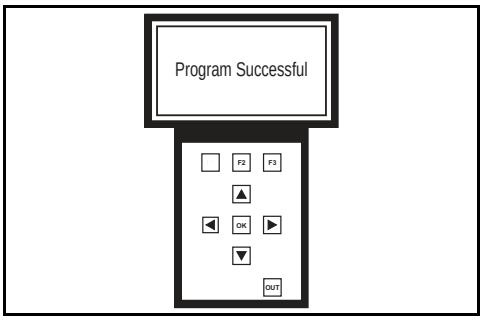

8. Programming ended

   Press **OK** to move on to the next screen

   "Please key OFF and ON"

   Turn the truck off and on again

In the case of updating the Logic Units, the request to use the **CLEAR EEPROM** function will appear on the last screen

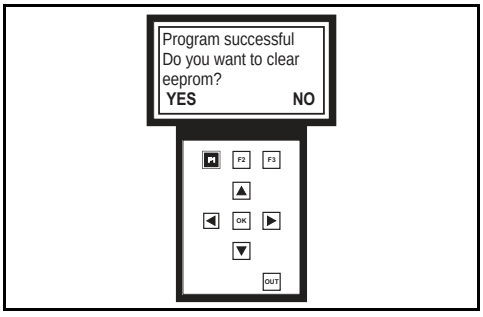

9. Press **F1** to perform the function

   Press **F3** to not perform the function

10. Wait for this message to appear:

    "PROGRAM AND CLEAR EEPROM SUCCESFUL PLEASE KEY OFF AND ON"

Turn the truck off and on again

MANUAL MODE

Procedure

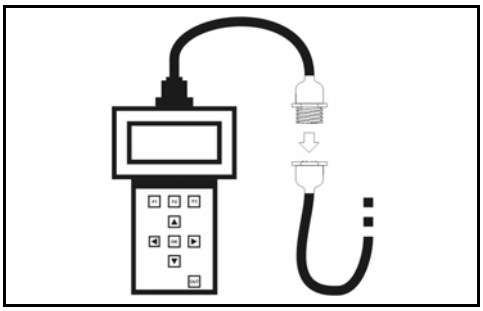

1. Connect the programmer and turn on the truck (see specific paragraph)

   Wait a few seconds for the data to load

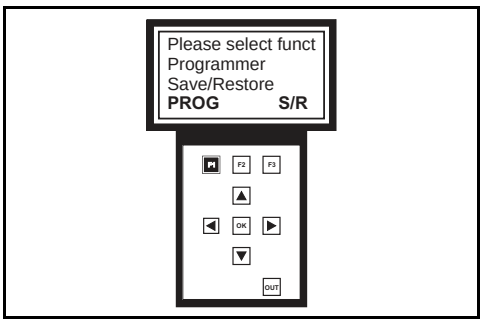

2. Press **F1** to select the Programmer function

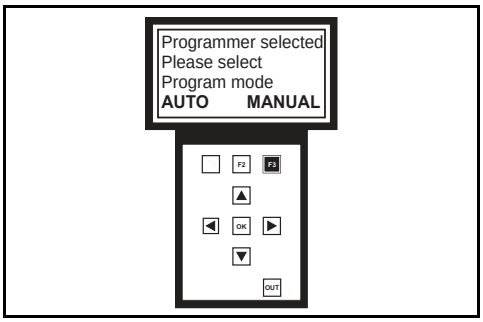

3. Press **F3** to select Manual mode

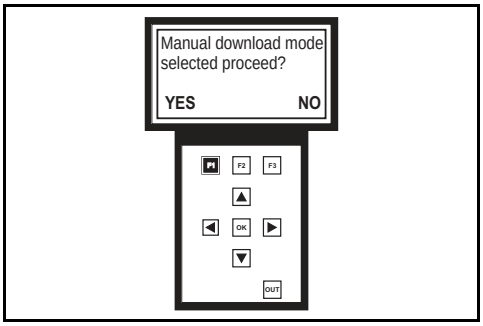

4. Press **F1** to confirm your choice

   Press **F3** to return to the previous screen

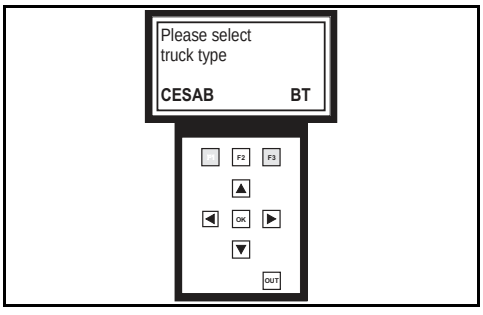

5. Use **F1** if the truck to be updated is CESAB

   Use **F3** if the truck to be updated is BT

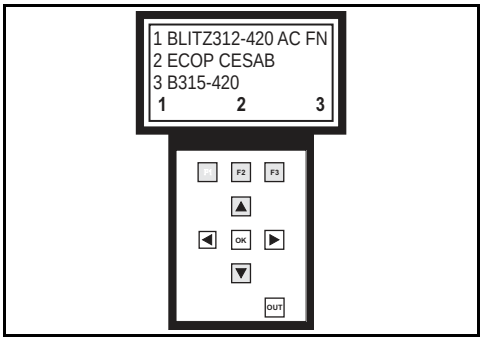

6. Use the buttons ▲ ▼ to change screen and view the truck models

   Use the buttons F1 F2 F3 to select the truck model connected to the programmer

   F1 ⟶ selects line 1
   F2 ⟶ selects line 2
   F3 ⟶ selects line 3

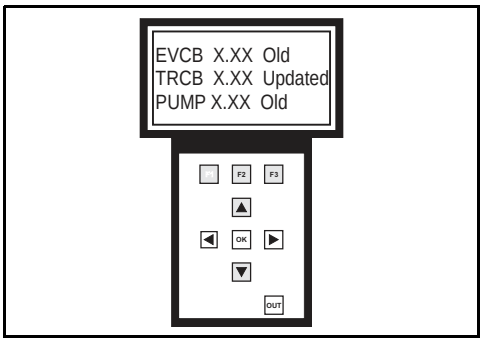

7. Use the buttons ▲ ▼ to change screen and view the cards present on the truck

   Use the buttons F1 F2 F3 to select the cards to be updated

   F1 ⟶ selects line 1
   F2 ⟶ selects line 2
   F3 ⟶ selects line 3

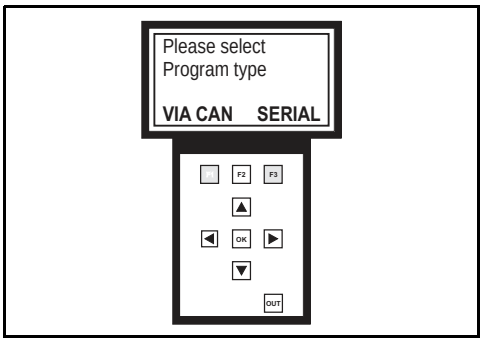

8. Press **F1** to select programming by **CAN-BUS**

   Press **F3** to select programming by **SERIAL CONNECTION**

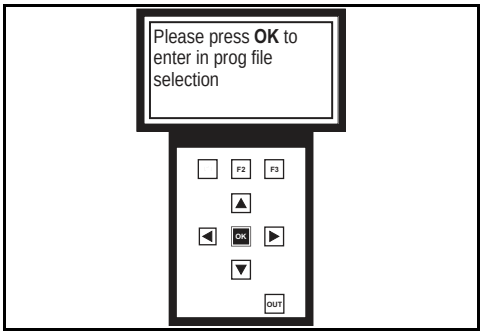

9. Press **OK** to confirm your choice

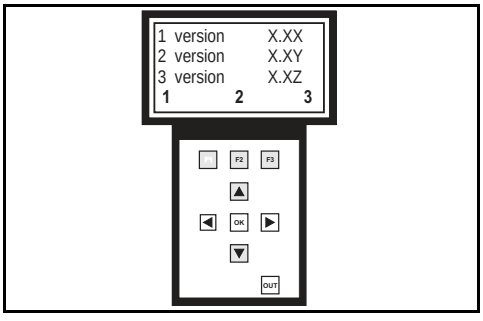

10. Use the buttons ▲ ▼ to change screen and view the software versions

    Use the buttons F1 F2 F3 to select the software version to be installed

    F1 ⟶ selects line 1
    F2 ⟶ selects line 2
    F3 ⟶ selects line 3

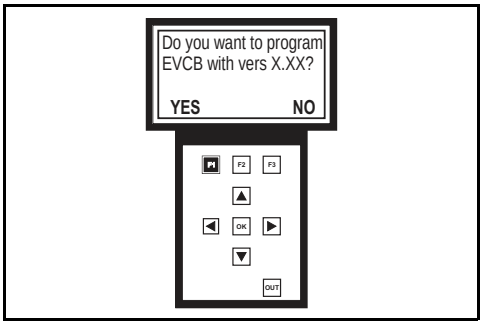

11. Press **F1** to confirm your choice and start programming

    Press **F3** to return to the previous screen

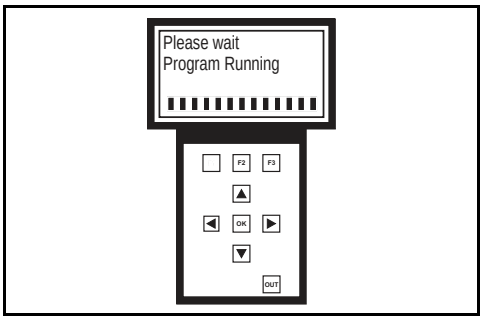

12. Wait until the end of programming

Note:
Do not turn off the truck, disconnect the programmer or the battery during programming

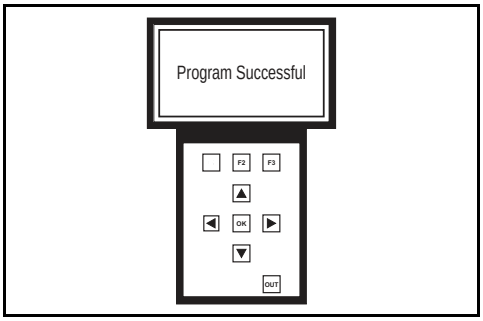

13. Programming ended

    Press **OK** to move on to the next screen

    "Please key OFF and ON"

    Turn the truck off and on again

In the case of updating the Logic Units, the request to use the **CLEAR EEPROM** function will appear on the last screen

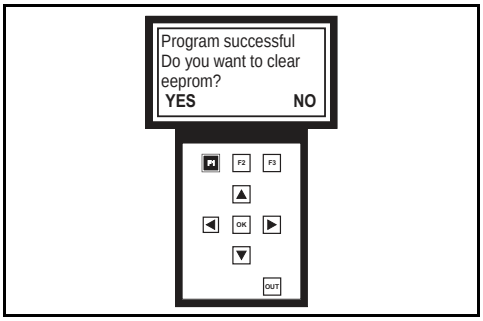

14. Press **F1** to perform the function

    Press **F3** to not perform the function

15. Wait for this message to appear:

    "PROGRAM AND CLEAR EEPROM SUCCESFUL PLEASE KEY OFF AND ON"

    Turn the truck off and on again

SAVE FUNCTION

With the SAVE function it is possible to create a file in the programmer SD card for saving the operator profile parameters.

Procedure

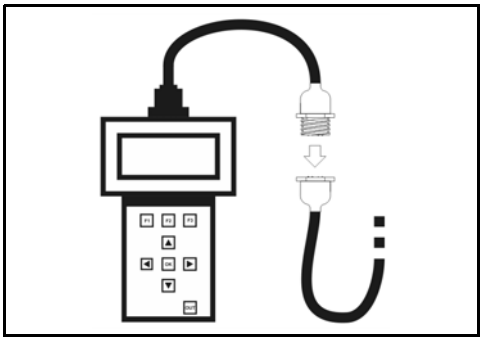

1. Connect the programmer and turn on the truck (see specific paragraph)

   Wait a few seconds for the data to load

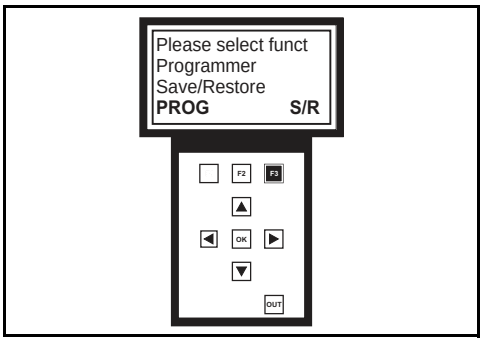

2. Press **F3** to select the function SAVE/RESTORE

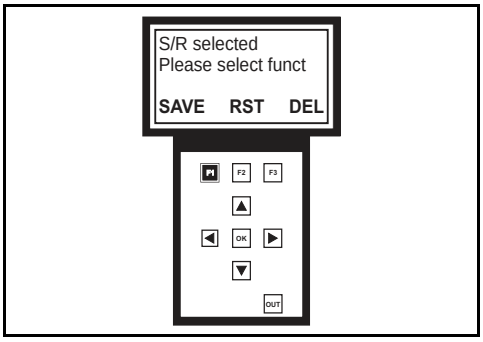

3. Press **F1** to select the SAVE function

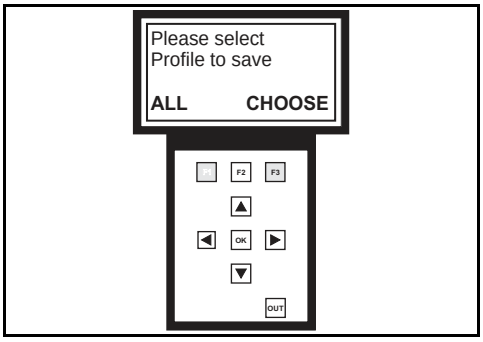

4. Press **F1** to save all the profiles (0-1-2-3-4)

   Press **F3** to save only a determined profile

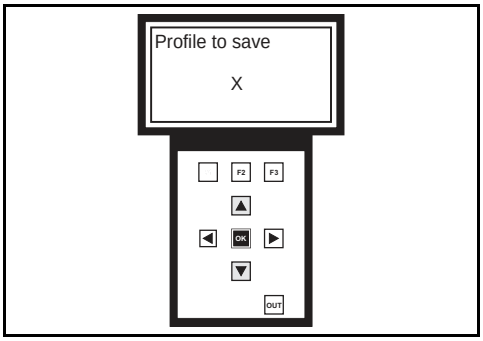

5. If the CHOOSE option was chosen on the previous screen, use the buttons ▲ ▼ to select the profile to be saved

   Press **OK** to confirm

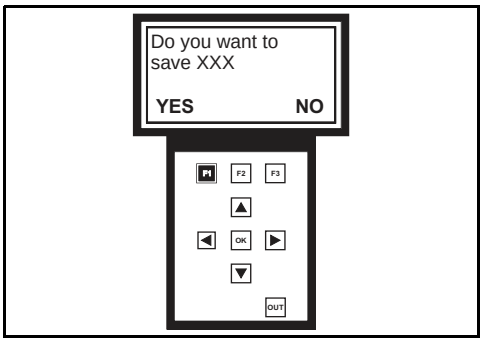

6. Press **F1** to confirm

   Press **F3** to return to the previous screen

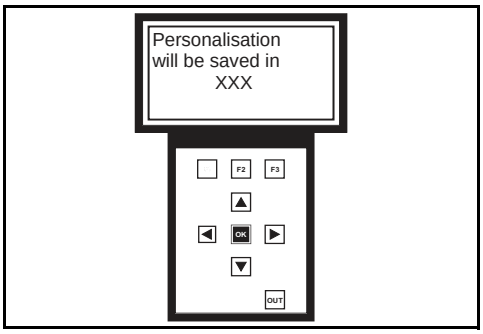

7. Press **OK** to continue

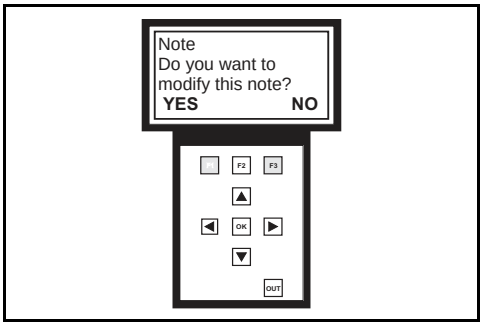

8. Press **F1** if you want to rename the file

   Press **F3** if you want to keep the default name

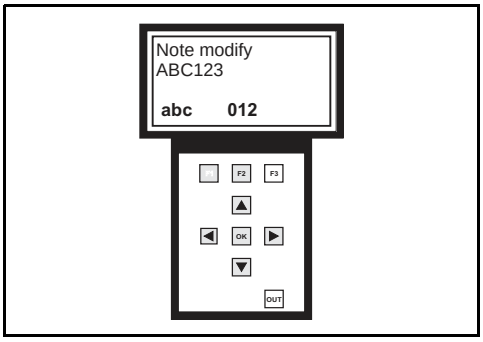

9. If the YES option was chosen on the previous screen, use the buttons:

   F1 and **F2** to pass from letters to numbers and vice versa
   ◄ ► to move along the text
   ▲ ▼ to select letters or numbers

   Press **OK** to confirm

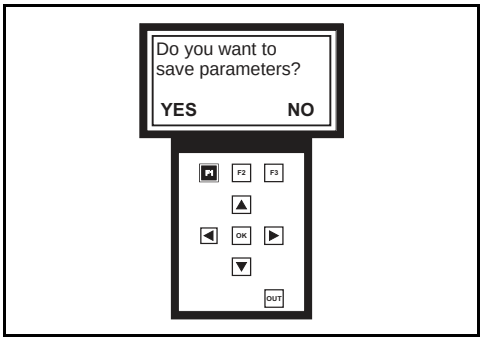

10. Press **F1** to start saving

    Press **F3** to return to the previous screen

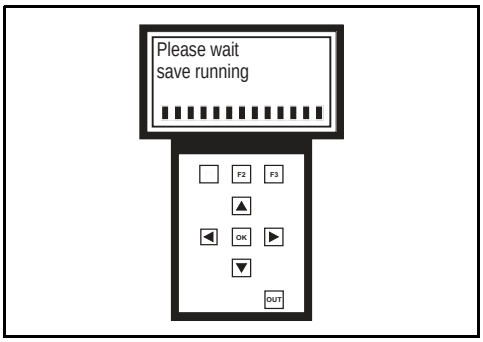

11. Wait until the end of saving

Note:
Do not turn off the truck, disconnect the programmer or the battery during saving

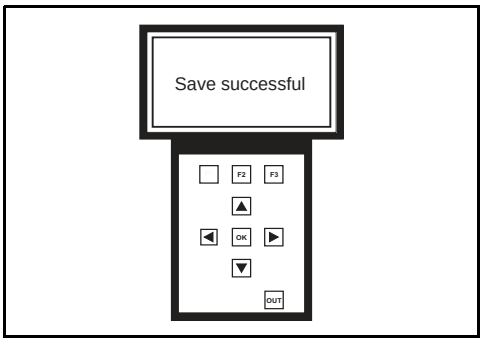

12. Saving ended

    Press **OK** to return to the first screen

RESTORE FUNCTION

The RESTORE function allows you to load on the truck the files for saving the operator profile parameters present on the SD card, created with the SAVE function

Note:
Before proceeding with the RESTORE function, it is necessary to ensure that the truck that is to receive the update has the same software versions as the truck from which the file was created. If the receiving truck has different software versions from the original truck, the update might not display all the parameters, indicating this with the message "FAILED".

Procedure

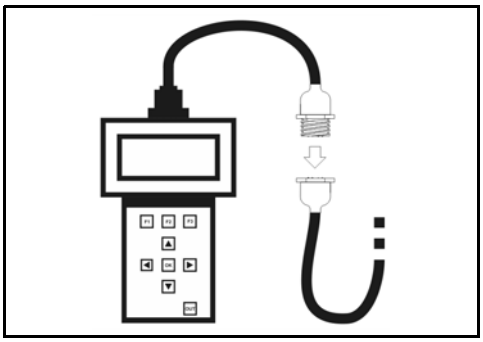

1. Connect the programmer and turn on the truck (see specific paragraph)

   Wait a few seconds for the data to load

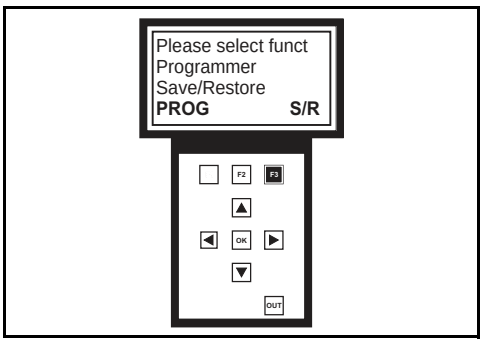

2. Press **F3** to select the function SAVE/RESTORE

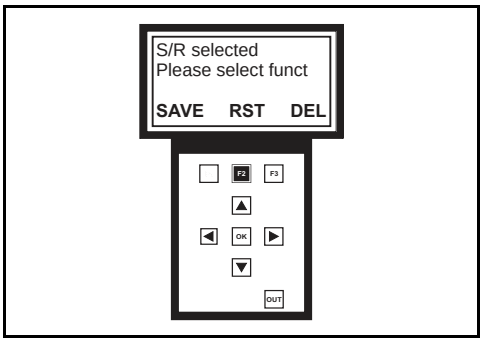

3. Press **F2** to select the RESTORE function

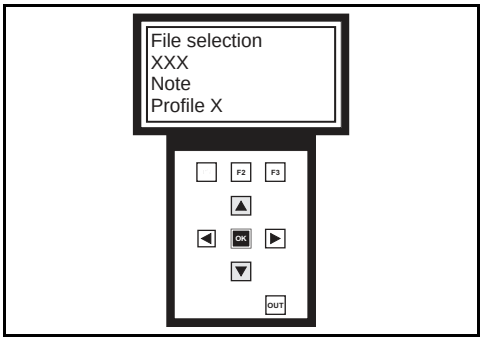

4. Use the buttons ▲ ▼ to select the file to be loaded

   Press **OK** to confirm your choice

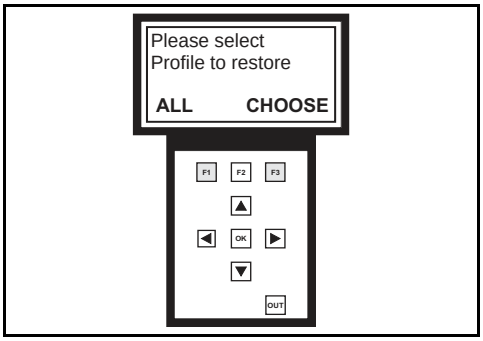

5. Press **F1** if you intend to load all the profiles present in the file

   Press **F3** if you intend to load only one of the profiles present in the file

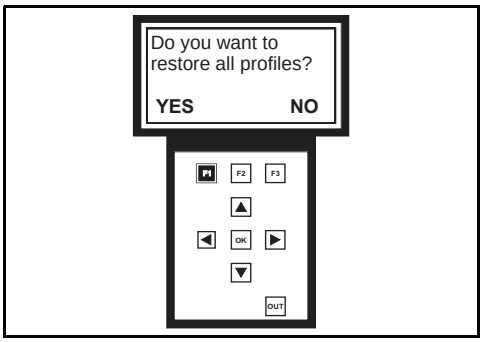

6. Press **F1** to confirm

   Press **F3** to return to the previous screen

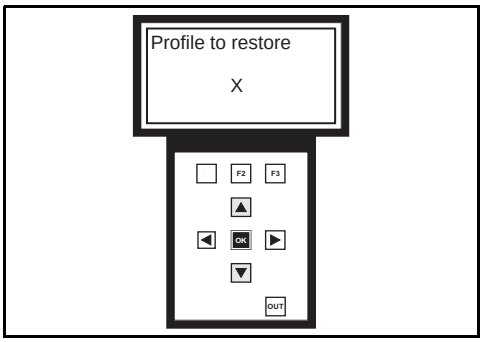

7. Press the buttons ▲ ▼ to select the profile

   Press **OK** to confirm your choice

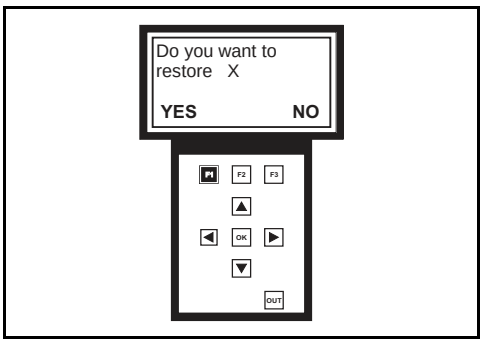

8. Press **F1** to start restoring

   Press **F3** to return to the previous screen

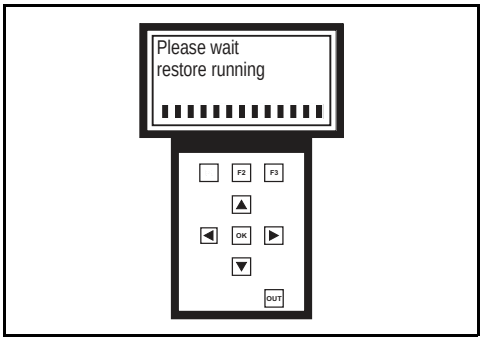

9. Wait until the end of restoring

Note:
Do not turn off the truck, disconnect the programmer or the battery during restoring

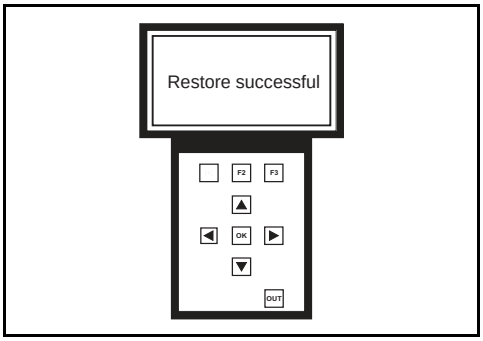

10. Restore ended

Press **OK** to return to the first screen

DELETE FUNCTION

The DELETE function allows you to delete from the SD card the files that were created with the SAVE function.

Procedure

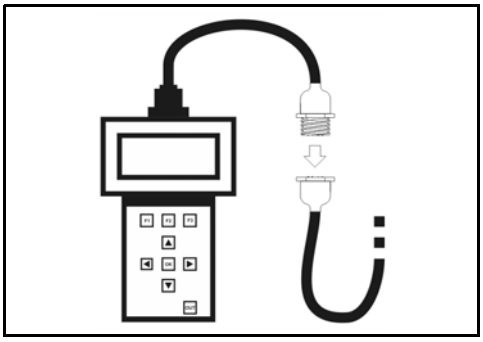

1. Connect the programmer and turn on the truck (see specific paragraph)

   Wait a few seconds for the data to load

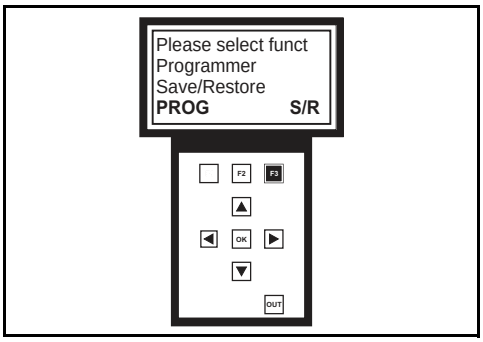

2. Press **F3** to select the function SAVE/RESTORE

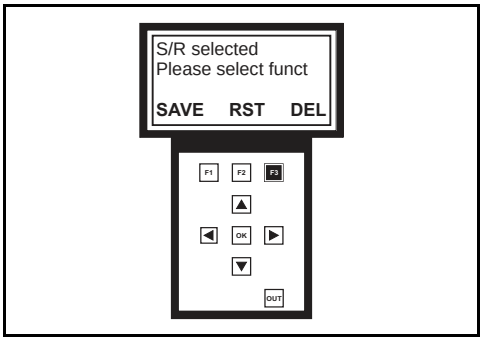

3. Press **F3** to select the DELETE function

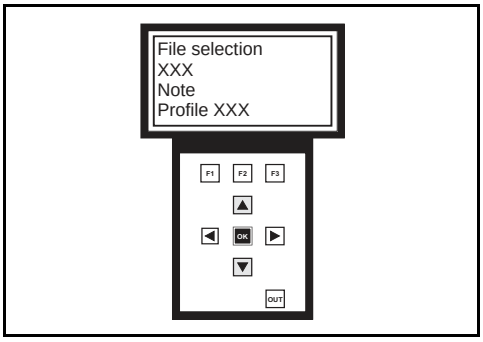

4. Use the buttons ▲ ▼ to select the file to be deleted

   Press **OK** to confirm your choice

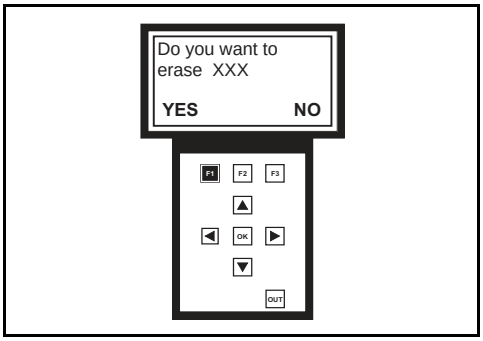

5. Press **F1** to delete the file

   Press **F3** to return to the previous screen

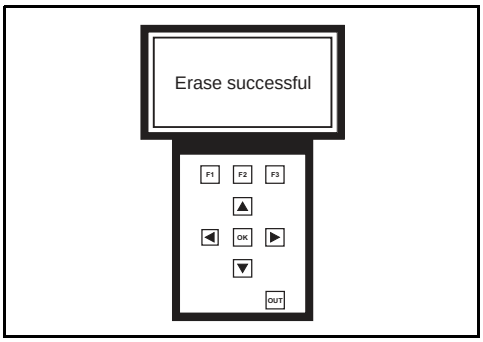

6. File deleted

   Press **OK** to return to the first screen

INFORMATION MESSAGES

N°	Programmer message	Description
1	Card not found please check card insertion	The programmer is connected without SD card
2	Card error please check card	The SD card is damaged
3	File not found	The file selected is not stored on the SD card
4	Please key OFF and ON before program this board	The machine needs to be reset with the key
5	Wrong device connected	The programmer wiring is connected to the wrong card
6	Please check device connection and power error code XXX	Either the card to be updated is not powered or it is not on the CAN-BUS
7	Reset failed please key OFF and ON	Automatic truck reset failed
8	Clear eeprom failed repeat operation	Restoring default parameters failed, repeat the download operation
9	Program failed repeat operation	Download operation failed, repeat procedure
10	Please key OFF twice	Reset default parameters and truck serial number
11	Attention no file available	On the SD card there is no file for the card selected
12	Attention XXX is waiting for program program it before	Wrong card for this software, connect to the correct card
13	Attention XXX is waiting for program	Wrong card for this software, connect to the correct card
14	Attention via CAN program type not possible please use serial	Programming by CAN-BUS not possible, use SERIAL mode
15	Card full please erase file	Memory full, delete one file for the truck connected (SAVE/RESTORE menu)
16	Please check device connection and power error while setting profile	Check the CAN-BUS of the programmer and of the truck
17	Please check device connection and power error while setting LPH	Check the CAN-BUS of the programmer and of the truck
18	Profile already exist	The file of this profile already exists in the SAVE/ RESTORE menu
19	Auto recognition failed save restore not possible	The programmer does not recognize the truck, try MANUAL mode
20	Attention origin and present	The truck has a different software version from the file of origin
21	Parameter file saved with this truck serial number has different software version	The file stored with this serial number has different software versions. Delete the old file

SERIAL CONNECTION

All the truck cards except the logic units have a serial connector inside.

Note: The programmer must always be connected to the CAN-BUS connector in order to receive power

MCB main control board

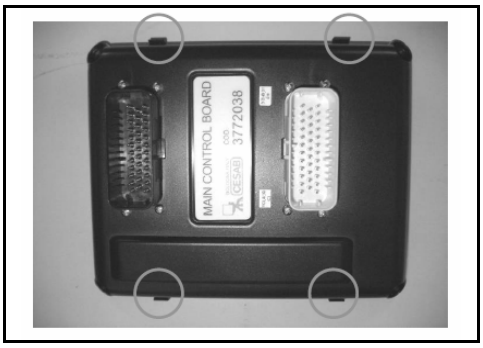

1. Remove the rear cover by releasing the four clips

2. Remove the front cover by unscrewing the 8 fixing screws

3. The two serial connectors are near the black connector

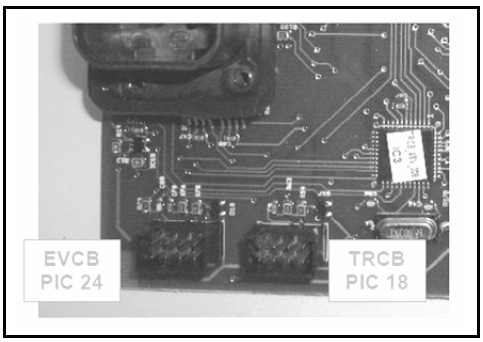

4. **PIC24** is the serial connector for the EVCB section

   PIC18 is the serial connector for the TRCB section

ARMREST CARD

1. Unscrew the 4 screws located under the head of the armrest

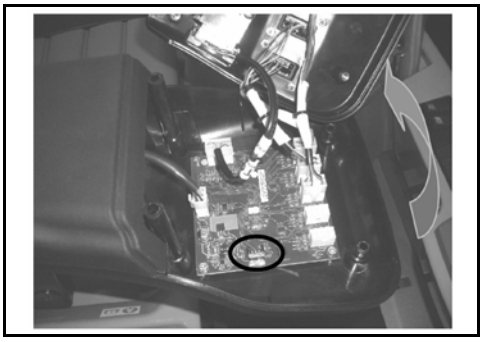

2. Remove the cover from the head of the armrest

   The serial connector is situated on the right side of the card

DISPLAY

1. Remove the 4 screws at the rear of the display

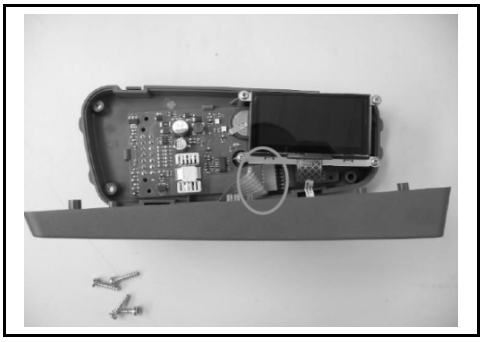

2. Remove the front cover, disconnecting the wiring

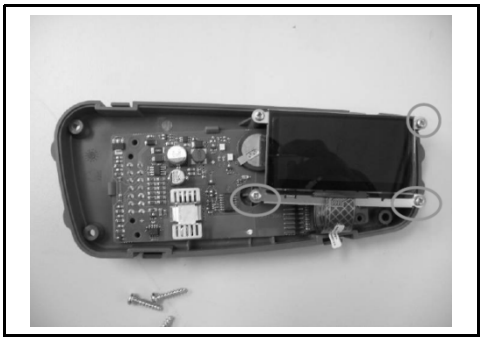

3. Unscrew the 3 screws that hold the screen

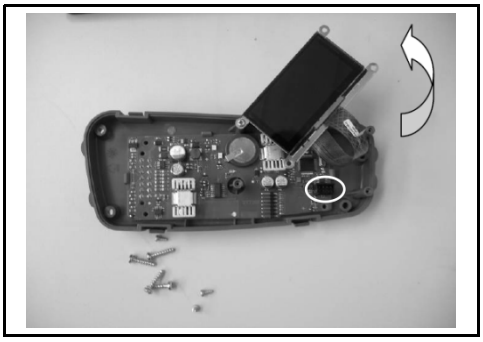

4. The serial connector is situated under the screen

SD CARD SOFTWARE UPDATE

Procedure for installing the new software on the programmer SD card.

1. Download the latest programmer software package and copy it onto the desktop of the computer
2. Unzip the programmer software package file if it is in .ZIP or .RAR format
3. Connect the SD card to the computer using a multimedia card reader
4. Delete all the files on the SD card
   (if present, save the .TXT files created with the SAVE/RESTORE function in the folders of the individual truck models)
5. Copy the entire content of the programmer software package into the SD card
   (copy the .TXT files created with the SAVE/RESTORE function into the USERFILE folder of the truck model concerned)
6. Insert the SD card in the programmer slot

APPENDIX

Page

TECHNICAL DATA 17-2

AUXILIARY WIRING HARNESS 17-6

CONNECTORS..... 17-7

ELECTRIC DIAGRAMS..... 17-12

TECHNICAL DATA

Model	1,0 ton	1,3 ton	1,5 ton
Traction motor			
Type	TSA200-140-085 Asynchronous		
Power	4,9 kW		
Nominal voltage	16 V		
Current	255 A		
Frequency	52 Hz		
Power factor	0,81		
Insulation class	F		
Degree of protection	IP 54		
Service	S2-60 min		
Poles	4		
R.p.m.	1515 rpm		
Power cables tightening torque	13 Nm (± 10%)		
Tightening torque of fixing motor/motor gear	79 Nm (± 15%)		

Pump motor	
Type	TSA170-210-033 Asynchronous
Power	7,5 kW
Nominal voltage	16 V
Current	375 A
Frequency	70 Hz
Power factor	0,82
Insulation class	H
Degree of protection	IP 54
Service	S3 - 40%
Poles	4
R.p.m.	2030 rpm
Power cables tightening torque	13 Nm (± 10%)
Tightening torque of fixing motor/pump	45 Nm (± 10%)
Tightening torque of fixing motor/antivibration	15 Nm (± 10%)

Model	1,0 ton	1,3 ton	1,5 ton
Rear axle			
Model	ZF GK26LD		
Reduction ratio	1:27		
Quantity of oil	6,2 litri		
Type of oil (standard version)	MOBILUBE OIL 1 HD 80W-90		
Type of oil (cold storage version)	MOBILUBE OIL 1 SHC 75W-90		
Tightening torque of fixing motor gear/chassis	283 Nm (± 5%)		

Brakes	
Type of service brake	Drum
Strenght of service brake	5,50 kN
Type of parking brake	Drum
Strenght of parking brake	4,50 kN
Diameter of brake wheel	170 mm
Thickness of brake wheel	40 mm
Area of brake shoe	6073 mm² (for shoe)
Thickness of brake shoe	5 mm

Wheels		
Type	Super Elastic (SE) Pneumatic (PN) Cushion (CU)	
Front wheel (SE/PN)	18X7-8	
Rear wheel (SE/PN)	18X7-8	
Cushion front wheel (CU)	457X152X308	
Cushion rear wheel (CU)	457X152X308	457X178X308
Pneumatic wheel pressure	10 bar	
Tightening torque of fixing wheel/hub	140 Nm (± 5%)	

Model	1,0 ton	1,3 ton	1,5 ton
Contactor			
Key contactor - CT1	SW60B-230 24V		
Traction contactor - CT2	SU280B-1004 24V CO		
CT1 coil	104 ohm		
CT2 coil	45 ohm		
Tightening torque of fixing cables CT1	3,6 ÷ 3,9 Nm		
Tightening torque of fixing cables CT2	15,3 ÷ 16,4 Nm		

Hydraulic pump	
Type of pump	gear
Model of pump	WSP 20-8
Pump transmission	direct motor drive
Pump capacity	12,45 l/min (1500 rpm)
Displacement pump	8,74 cm^3

Steering	
Type of power steering	Dynamic
Orbitrol model	OSPC 50 LS
Orbitrol maximum pressure	100 bar
Orbitrol oil capacity	8 l/min
Orbitrol displacement	50 cm^3
Model of priority valve	OLSP 80
Tightening torque of fixing priority valve/pump	12 Nm (± 15%)
Tightening torque of fixing orbitrol/steering column	40 Nm (± 15%)
Tightening torque LS channel/orbitrol	35 Nm (± 10%)
Tightening torque orbitrol connection	55 Nm (± 10%)

Traction/pump logic unit	
Model	ACE-2
Maximum current	500 A
Fuse	80V 350A
Tightening torque of cables	13 ÷ 15 Nm

Model	1,0 ton	1,3 ton	1,5 ton
Mechanical control valve			
Lifting maximum pressure	175 bar	215 bar	240 bar
Tilting maximum pressure	130 bar		
Sideshift maximum pressure	130 bar		
IV way maximum pressure	130 bar		
Lifting oil capacity	30 l/min		
Tilting oil capacity	13 l/min		
Sideshift oil capacity	13 l/min		
IV way oil capacity	13 l/min		
Lifting solenoid valve resistence	28 ohm		
Tilting solenoid valve resistence	28 ohm		

Electrical control valve			
Lifting maximum pressure	175 bar	215 bar	240 bar
Tilting maximum pressure	130 bar		
Sideshift maximum pressure	130 bar		
IV way maximum pressure	130 bar		
Lifting oil capacity	40 l/min		
Tilting oil capacity	12 l/min		
Sideshift oil capacity	12 l/min		
IV way oil capacity	25 l/min		
Solenoid valve resistence EV2 (lifting)	27 ohm		
Solenoid valve resistence EVP1 (lowering)	18 ohm		
Solenoid valve resistence EVP3 e EVP4 (tilting)	18 ohm		
Solenoid valve resistence EV5 e EV6 (sideshift)	19 ohm		
Solenoid valve resistence EV7 e EV8 (IV way)	19 ohm		
Solenoid valve resistence EVP (drain)	18 ohm		

AUXILIARY WIRING HARNESS

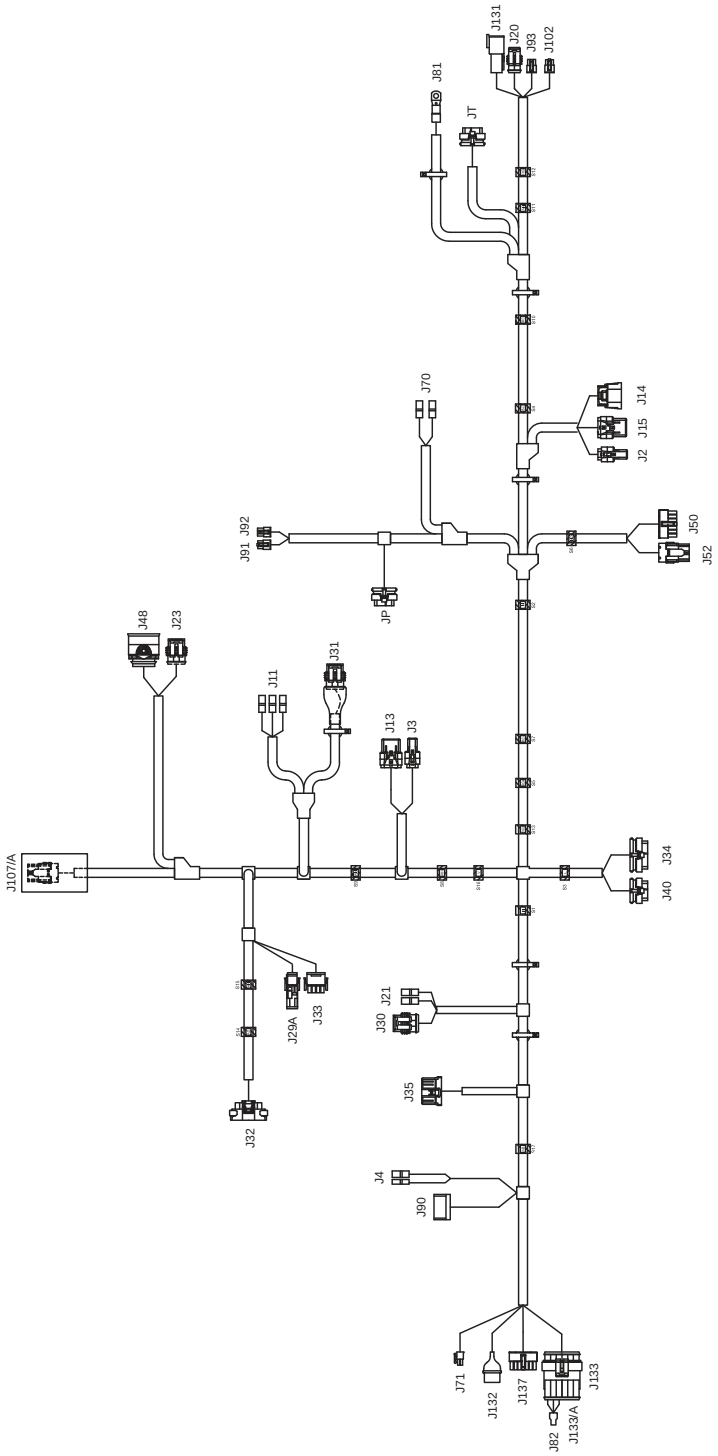

Connector	Description
J2	Traction motor
J3	Pump motor
J4	Oil brake tank
J11	Horn
J13	Pump motor
J14	Steering pot
J15	Traction motor
J20	Seat
J21	Emergency button
J23	Valves
J29	Swaying pedal
J29/A	Cap
J30	Parking brake
J31	Brake pedal
J32	Accelerator pedal
J33	Direction pedal
J34	I/O board
J35	Steering column
J40	I/O board
J48	Distributor/MHYRIO
J50	Contactor / Fuses
J52	Contactor / Fuses
J70	Buzzer
J71	Buzzer
J81	Negative
J82	+V out key
J90	Optional fuses
J91	Left light equip.
J92	Left light equip.
J93	Right light equip.
J102	Right light equip.
J107/A	Heater
J131	Armrest
J132	Can-Bus tap
J133/A	Jumper connection
J133	+24V Can-Bus tap
J137	Dashboard
JP	Pump controller
JT	Traction controller

CONNECTORS

J2							32	TRACTION MOTOR ANALOGIC TEMP. SENSOR
PIN	COL	mm²	MARK	TW	TERM	DEST		
						CONN	P/N	FUNCTION
1	RL	0.50			34	JT	23	GND
2	SL	0.50			34	JT	22	+V

J3							32	PUMP MOTOR ANALOGIC TEMP. SENSOR
PIN	COL	mm²	MARK	TW	TERM	DEST		
						CONN	P/N	FUNCTION
1	RV	0.50			34	JP	23	GND
2	CN	0.50			34	JP	22	+V

J4								OIL BRAKE TANK
PIN	COL	mm²	MARK	TW	TERM	DEST		
						CONN	P/N	FUNCTION
	L	0.35			17-19	S3		NEGATIVE (DIGITAL)
	RA	0.35			17-19	J137	6	OIL BRAKE SIGNAL

J11								HORN
PIN	COL	mm²	MARK	TW	TERM	DEST		
						CONN	P/N	FUNCTION
	N	0.50			17-19	S1		NEGATIVE
	B	0.50			17-19	J34	9	DRIVER
	A	0.50			17-19	J90	5	+V

J13							33	PUMP MOTOR ENCODER
PIN	COL	mm²	MARK	TW	TERM	DEST		
						CONN	P/N	FUNCTION
1	AZ	0.50			34	JP	8	+12V
2	GN	0.50			34	JP	15	GND
3	AV	0.50			34	JP	7	A
4	HV	0.50			34	JP	14	B

J14							73	STEER POTENTIOMETER
PIN	COL	mm²	MARK	TW	TERM	DEST		
						CONN	P/N	FUNCTION
1	HN	0.50			74-75	JT	5	GND
2	V	0.50			74-75	JT	10	C POT
3	AG	0.50			74-75	JT	2	+V

J15							33	TRCTION MOTOR ENCODER
PIN	COL	mm²	MARK	TW	TERM	DEST		
						CONN	P/N	FUNCTION
1	BS	0.50			34	JT	8	+12V
2	BV	0.50			34	JT	15	GND
3	NV	0.50			34	JT	7	A
4	BL	0.50			34	JT	14	B

J20							35	SEAT
PIN	COL	mm²	MARK	TW	TERM	DEST		
						CONN	P/N	FUNCTION
1	NL	0.35			38-40	J50	7	SEAT SIGNAL
2	N	0.35			38-40	S2		NEGATIVE

J21								EMERGENCY PUSH BUTTON
PIN	COL	mm²	MARK	TW	TERM	DEST		
						CONN	P/N	FUNCTION
	R	1.50	02		18-19	S13		OUT F4
	R	1.50	03		18-19	J35	9	INPUT KEY

J23							36	VALVES
PIN	COL	mm²	MARK	TW	TERM	DEST		
						CONN	P/N	FUNCTION
1	BC	0.50			38-40	J40	19	+V LOWERING VALVE
2	N	0.50			38-40	S1		NEGATIVE
3	GR	0.50			38-40	J40	16	+V TILT VALVE

J29							47-48-49	SWAYING PEDAL
PIN	COL	mm²	MARK	TW	TERM	DEST		
						CONN	P/N	FUNCTION
1	V	0.35			54	S16		C POT
2	HN	0.35			54	S15		N POT
3	AG	0.35			54	S14		+ V POT
4					55			
5					55			
6					55			

J29/A							48-50	CAP
PIN	COL	mm²	MARK	TW	TERM	DEST		
						CONN	P/N	FUNCTION
1					55			
2					55			
3					55			
4					55			
5					55			
6					55			

J30 — 36 — PARKING BRAKE

PIN	COL	mm²	MARK	TW	TERM	DEST CONN	DEST PIN	FUNCTION
1	N	0.35			38-40	S1		NEGATIVE
2					45			
3	BV	0.35			38-40	J50	13	PARKING BRAKE SIGNAL

J31 — 36-46 — BRAKE PEDAL

PIN	COL	mm²	MARK	TW	TERM	DEST CONN	DEST PIN	FUNCTION
1	L	0.50			38-40	S3		NEGATIVE
2	BZ	0.50			38-40	J34	15	BRAKE PEDAL SIGNAL
3					45			

J32 — 76 — ACCELERATOR PEDAL SYSTEM

PIN	COL	mm²	MARK	TW	TERM	DEST CONN	DEST PIN	FUNCTION
1	AG	0.35			74-75	S14		+V POT
2	HN	0.35			74-75	S15		N POT
3	V	0.35			74-75	S16		C POT
4					77			
5					77			
6					77			

J33 — 51-52-53 — DIRECTION PEDAL SYSTEM

PIN	COL	mm²	MARK	TW	TERM	DEST CONN	DEST PIN	FUNCTION
1	L	0.35			54	S3		NEGATIVE (DIGITAL)
2	RH	0.35			54	S8		FW
3	BH	0.50			54	J34	20	/FW
4	L	0.35			54	S3		NEGATIVE (DIGITAL)
5	LG	0.50			54	J34	25	CONFIG
6					55			
7	L	0.35			54	S3		NEGATIVE (DIGITAL)
8	RN	0.35			54	S9		BW
9	BN	0.50			54	J34	18	/BW
10	L	0.35			54	S3		NEGATIVE (DIGITAL)
11	RV	0.50			54	J34	32	EN
12	LS	0.50			54	J34	31	/EN

J34 — 63 — I/O CONTROL BOARD

PIN	COL	mm²	MARK	TW	TERM	DEST CONN	DEST PIN	FUNCTION
1	MN	0.50			64	J93	2	BACK LIGHT
2	HN	0.50			64	S15		N POT
3	V	0.50			64	S16		C POT
4					65			
5	AG	0.50			64	S14		+V POT
6	L	0.50			64	S3		NEGATIVE (DIGITAL)
7	N	0.50			64	S1		NEGATIVE
8	N	0.50			64	S1		NEGATIVE
9	B	0.50			64	J11		HORN DRIVER
10	N	0.50			64	S1		NEGATIVE
11	R	0.50	04		64	S5		+V CAN IN
12	CR	0.50			64	J131	4	+V CAN OUT
13	AM	0.50			64	J91	2	STOP LIGHT
14	NZ	0.50			64	J50	10	PARKING BRAKE
15	BZ	0.50			64	J31	2	BRAKE PEDAL
16	BM	0.50			64	J35	4	HORN INPUT
17					65			
18	BN	0.50			64	J33	9	/BW
19	RN	0.50			64	S9		BW
20	BH	0.50			64	J33	3	/FW
21	HG	0.50		TW1	64	J137	2	CAN L
22	HG	0.50		TW5	64	S12		CAN L
23	HG	0.50		TW7	64	J133	5	CAN L
24	R	0.50	07		64	S7		+V F1
25	LG	0.50			64	J33	5	CONFIG
26					65			
27					65			
28					65			
29					65			
30	RH	0.50			64	S8		FW
31	LS	0.50			64	J33	12	/EN
32	RV	0.50			64	J33	11	EN
33	AN	0.50		TW1	64	J137	1	CAN H
34	AN	0.50		TW5	64	S11		CAN H
35	AN	0.50		TW7	64	J133	4	CAN H

J35 — 56 — STEERING COLUMN

PIN	COL	mm²	MARK	TW	TERM	DEST CONN	DEST PIN	FUNCTION
1								
2	RH	0.35			57	S8		FW
3	RN	0.35			57	S9		BW
4	BM	0.50			57	J34	16	HORN INPUT
5	CL	0.35			57	J137	4	SPEED REDUCTION
6	RG	0.35			57	J137	5	L-P-H
7								
8	R	1.50	04		58	J133	1	+V OUT KEY
9	R	1.50	03		58	J21		+V INPUT KEY
10	L	0.35			57	S3		NEGATIVE (DIGITAL)
11								
12								

J40 — 62 — I/O CONTROL BOARD

PIN	COL	mm²	MARK	TW	TERM	DEST CONN	DEST PIN	FUNCTION
1	MG	0.50			64	J48	12	LIFTING
2					65			
3	HM	0.50			64	J48	3	SIDESHIFT
4	AB	0.50			64	J48	4	4 TH
5					65			
6	L	0.50			64	S3		NEGATIVE (DIGITAL)
7	AG	0.50			64	J48	7	+V POT
8	HG	0.50		TW4	64	J48	8	CAN L
9	HN	0.50			64	J48	9	GND POT
10	AR	0.50			64	J48	2	TILT
11	V	0.50			64	J48	11	C POT
12					65			
13					65			
14					65			
15	AN	0.50		TW4	64	J48	13	CAN H
16	GR	0.50			64	J23	3	+V TILT VALVE
17	N	0.50			64	S1		NEGATIVE
18					65			
19	BC	0.50			64	J23	1	+V LOWERING VALVE
20	R	0.50	07		64	S7		+V F1
21	R	0.50	07		64	S7		+V F1
22					65			
23					65			

J48 — 66 — DISTRIBUTOR / MHYRIO

PIN	COL	mm²	MARK	TW	TERM	DEST CONN	DEST PIN	FUNCTION
1	R	0.50	07		68	S7		+V F1
2	AR	0.50			67	J40	10	TILT
3	HM	0.50			67	J40	3	SIDESHIFT
4	AB	0.50			67	J40	4	4 TH
5	RH	0.35			67	S8		FW
6	L	0.35			67	S3		NEGATIVE (DIGITAL)
7	AG	0.50			67	J40	7	+V POT
8	HG	0.50		TW4	67	J40	8	CAN L
9	HN	0.50			67	J40	9	GND POT
10	RN	0.35			67	S9		BW
11	V	0.50			67	J40	11	C POT
12	MG	0.50			67	J40	1	LIFTING
13	AN	0.50		TW4	67	J40	15	CAN H
14	N	0.50			68	S1		NEGATIVE

J50 — 26 — CONTACTORS / FUSES

PIN	COL	mm²	MARK	TW	TERM	DEST CONN	DEST PIN	FUNCTION
1	Z	0.50			27	JT	16	COIL CONTACTOR CT2
2	R	0.50	04		27	J133	3	+V KEY
3	N	0.50			27	S2		NEGATIVE
4	R	1.00	02		28	S13		OUT F4
5	R	1.00	07		28	S7		OUT F1
6	R	1.00	07		28	S7		OUT F1
7	NL	0.35			27	J20	1	SEAT
8	Z	0.50			27	JT	17	COIL CONTACTOR CT2
9	AB	0.35			27	S17		BUZZER
10	NZ	0.50			27	J34	14	PARKING BRAKE
11	L	0.50			27	S3		NEGATIVE (DIGITAL)
12	BZ	0.50			27	S4		SEAT
13	BV	0.35			27	J30	3	PARKING BRAKE
14	NZ	0.50			27	S6		SAFETY

J52 — 29 — CONTACTORS / FUSES

PIN	COL	mm²	MARK	TW	TERM	DEST CONN	DEST PIN	FUNCTION
1	R	6.00	09		30	J90	1	OUT F2
2	R	8.00	08		31	J107/A	1	OUT F3

SOLUTION WITH 8 AWG TERMINAL

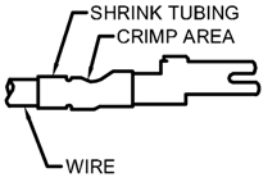

J70 — BUZZER

PIN	COL	mm²	MARK	TW	TERM	DEST CONN	DEST PIN	FUNCTION
	MN	0.35			17-19	J92	3	+V BUZZER
	N	0.35			17-19	S2		NEGATIVE

J71 — 23 — BUZZER

PIN	COL	mm²	MARK	TW	TERM	DEST CONN	DEST PIN	FUNCTION
1	R	0.35	02		27	S13		+V BUZZER
2	AB	0.35			27	S17		NEGATIVE

J81 — NEGATIVE

PIN	COL	mm²	MARK	TW	TERM	DEST		FUNCTION
						CONN	PIN	
	N	6.00			61	S1		
	N	8.00			#	J107/A	2	

J82 — +V OUT KEY

PIN	COL	mm²	MARK	TW	TERM	DEST		FUNCTION
						CONN	PIN	
	R	1.50			69	J133/A	1	
	R	1.50			#	J133/A	2	
	R	1.50			#	J133/A	3	

J90 — 22 — OPTIONAL FUSES

PIN	COL	mm²	MARK	TW	TERM	DEST		FUNCTION
						CONN	PIN	
1	R	6.00	09		24	J52	1	+V OUT F2
2	RC	0.35			20	S10		TAIL LIGHT
3	RA	0.50			20	J91	5	LEFT TURN LIGHT
4	RH	0.50			20	J102	5	RIGHT TURN LIGHT
5	A	0.50			20	J11		HORN
6								
7	N	6.00			24	S1		NEGATIVE
8								

J91 — 25 — LEFT LIGHTING EQUIPMENT

PIN	COL	mm²	MARK	TW	TERM	DEST		FUNCTION
						CONN	PIN	
1	N	0.50			27	S2		NEGATIVE
2	AM	0.50			27	J34	13	STOP LIGHT
3	AM	0.50			27	J102	2	STOP LIGHT
4								
5	RA	0.50			27	J90	3	LEFT TURN LIGHT
6	RC	0.35			27	S10		TAIL LIGHT

J92 — 24 — LEFT LIGHTING EQUIPMENT

PIN	COL	mm²	MARK	TW	TERM	DEST		FUNCTION
						CONN	PIN	
1	N	0.35			27	S2		NEGATIVE
2	MN	0.50			27	J93	3	BACK LIGHT
3	MN	0.35			27	J70		BACK LIGHT

J93 — 24 — RIGHT LIGHTING EQUIPMENT

PIN	COL	mm²	MARK	TW	TERM	DEST		FUNCTION
						CONN	PIN	
1	N	0.35			27	S2		NEGATIVE
2	MN	0.50			27	J34	1	BACK LIGHT
3	MN	0.50			27	J92	2	BACK LIGHT

J102 — 25 — RIGHT LIGHTING EQUIPMENT

PIN	COL	mm²	MARK	TW	TERM	DEST		FUNCTION
						CONN	PIN	
1	N	0.50			27	S2		NEGATIVE
2	AM	0.50			27	J91	3	STOP LIGHT
3								
4								
5	RH	0.50			27	J90	4	RIGHT TURN LIGHT
6	RC	0.35			27	S10		TAIL LIGHT

J107/A — 29-81 — HEATER

PIN	COL	mm²	MARK	TW	TERM	DEST		FUNCTION
						CONN	PIN	
1	R	8.00	08		31	J52	2	OUT F3
2	N	8.00			31	J81		NEGATIVE

SOLUTION WITH 8 AWG TERMINAL

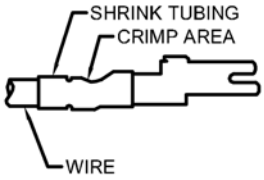

J131 — 70-71 — ARMREST CAN-BUS

PIN	COL	mm²	MARK	TW	TERM	DEST		FUNCTION
						CONN	PIN	
1	HG	0.50		TW8	72	S12		CAN L
2	AN	0.50		TW8	72	S11		CAN H
3	N	0.50			72	S2		NEGATIVE
4	CR	0.50			72	J34	12	+V CAN

J132 — 59-82 — CAN-BUS TAP

PIN	COL	mm²	MARK	TW	TERM	DEST CONN	DEST PIN	FUNCTION
1	R	0.35	04		60	S5		+V KEY
2	N	0.35			60	S1		NEGATIVE
3	AN	0.35		TW6	60	J137	8	CAN H
4	HG	0.35		TW6	60	J137	9	CAN L

J133/A — 42 — JUMPER CONNECTOR

PIN	COL	mm²	MARK	TW	TERM	DEST CONN	DEST PIN	FUNCTION
1	R	1.50			41-44	J82		+ 24V OUT KEY
2	R	1.50			41-44	J82		+ V KEY
3	R	1.50			41-44	J82		+ V CONTACTOR CT1
4					45			
5					45			
6					45			

J133 — 37 — +24V / CAN-BUS TAP

PIN	COL	mm²	MARK	TW	TERM	DEST CONN	DEST PIN	FUNCTION
1	R	1.50	04		39-41	J35	8	+ 24V OUT KEY
2	R	1.50	04		39-41	S5		+ V KEY
3	R	0.50	04		38-40	J50	2	+ V CONTACTOR CT1
4	AN	0.50		TW7	38-40	J34	35	CAN H
5	HG	0.50		TW7	38-40	J34	23	CAN L
6	N	0.50			38-40	S1		GND

J137 — 26 — DASHBOARD CAN-BUS

PIN	COL	mm²	MARK	TW	TERM	DEST CONN	DEST PIN	FUNCTION
1	AN	0.50		TW1	27	J34	33	CAN H
2	HG	0.50		TW1	27	J34	21	CAN L
3	N	0.35			27	S1		NEGATIVE
4	CL	0.35			27	J35	5	SPEED REDUCTION
5	RG	0.35			27	J35	6	L-P-H
6	RA	0.35			27	J4		IN OIL BRAKE
7	R	0.35	04		27	S5		+24V
8	AN	0.35		TW6	27	J132	3	CAN H
9	HG	0.35		TW6	27	J132	4	CAN L
10								
11								
12								
13	AB	0.35			27	S17		OUT BUZZER
14	N	0.35			27	S1		NEGATIVE

JP — 62 — PAP POWER AMPLIFER PUMP

PIN	COL	mm²	MARK	TW	TERM	DEST CONN	DEST PIN	FUNCTION
1	R	0.50	04		64	S5		+V KEY
2					65			
3					65			
4	R	0.50	04		64	S5		PUMP CONF.
5					65			
6	BZ	0.50			64	S4		SEAT
7	AV	0.50			64	J13	3	PHASE A
8	AZ	0.50			64	J13	1	+12V ENCODER
9	NZ	0.50			64	S6		GND
10					65			
11	NZ	0.50			64	S6		SAFETY IN
12					65			
13					65			
14	HV	0.50			64	J13	4	PHASE B
15	GN	0.50			64	J13	2	GND ENCODER
16					65			
17					65			
18					65			
19	LV	0.50			64	JT	11	OUT SAFETY
20	HG	0.50		TW3	64	S12		CAN L
21	AN	0.50		TW3	64	S11		CAN H
22	CN	0.50			64	J3	2	+V ANALOGIC TEMP. SENSOR
23	RV	0.50			64	J3	1	GND ANALOGIC TEMP. SENSOR

JT — 62 — PAT POWER AMPLIFER TRACTION

PIN	COL	mm²	MARK	TW	TERM	DEST CONN	DEST PIN	FUNCTION
1	R	0.50	04		64	S5		+V KEY
2	AG	0.50			64	J14	3	+V POT
3					65			
4					65			
5	HN	0.50			64	J14	1	N POT
6	BZ	0.50			64	S4		SEAT
7	NV	0.50			64	J15	3	PHASE A
8	BS	0.50			64	J15	1	+12V ENCODER
9					65			
10	V	0.50			64	J14	2	C POT
11	LV	0.50			64	JP	19	SAFETY
12					65			
13					65			
14	BL	0.50			64	J15	4	PHASE B
15	BV	0.50			64	J15	2	GND ENCODER
16	Z	0.50			64	J50	1	MAIN CONTACTOR COIL OUT
17	Z	0.50			64	J50	8	+V MAIN CONTSCTOR COIL
18					65			
19					65			
20	HG	0.50		TW2	64	S12		CAN L
21	AN	0.50		TW2	64	S11		CAN H
22	SL	0.50			64	J2	2	+V ANALOGIC TEMP. SENSOR
23	RL	0.50			64	J2	1	GND ANALOGIC TEMP. SENSOR

ELECTRIC DIAGRAMS

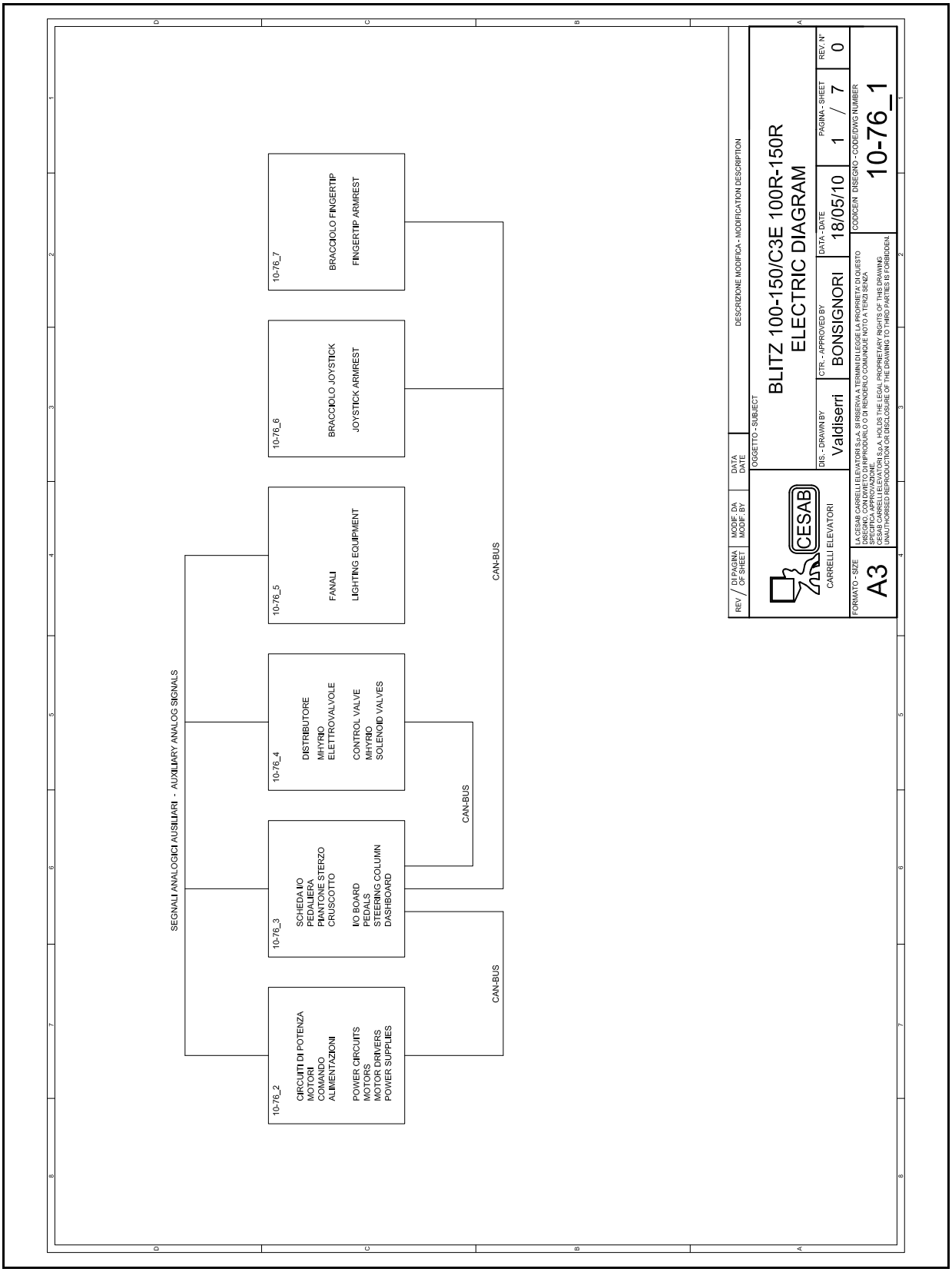

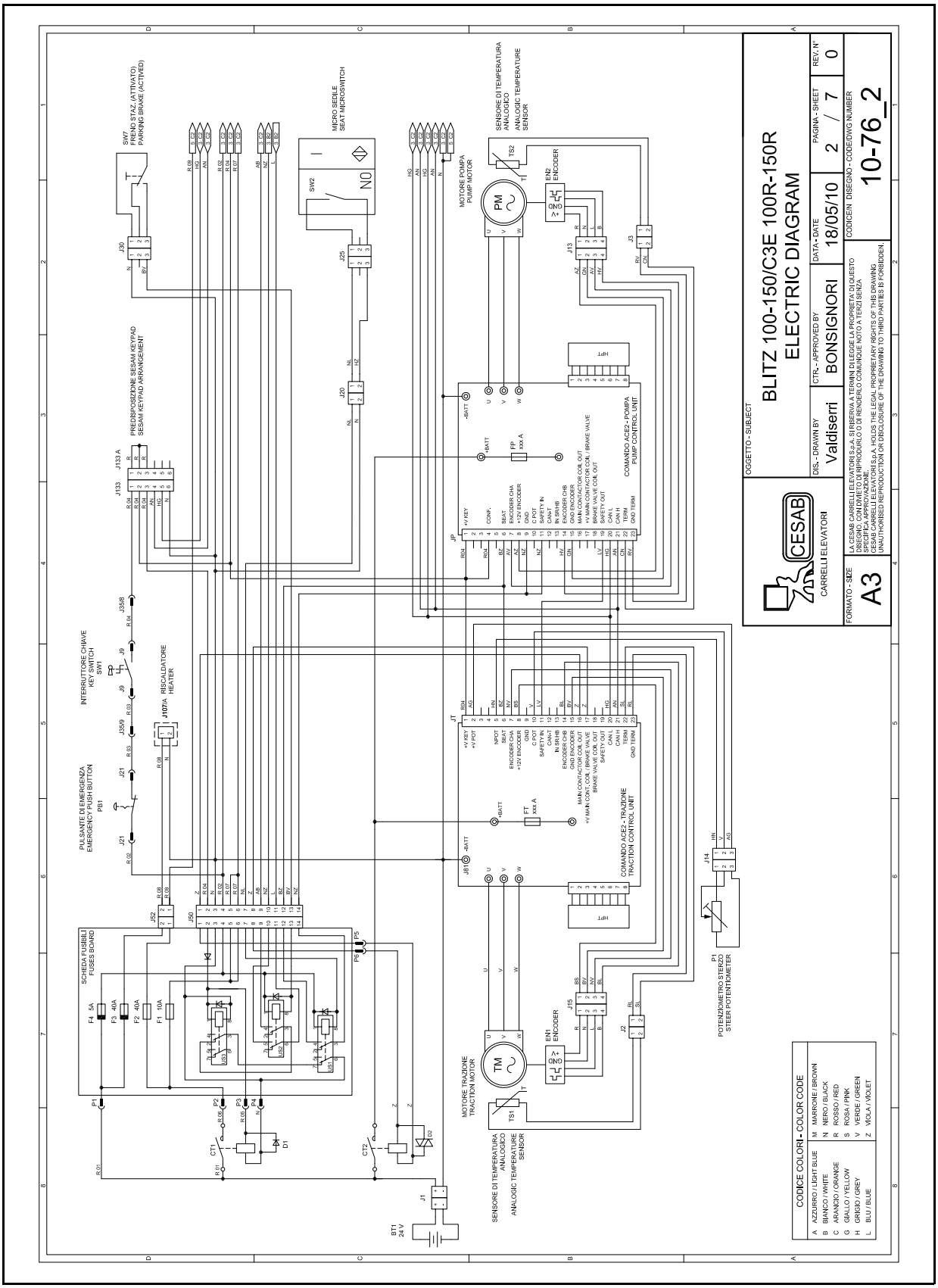
BLITZ 100-150/C3E 100R-150R
ELECTRIC DIAGRAM
OGGETTO - SUBJECT
DIS. - DRAWN BY
Valdiserri
CTR. - APPROVED BY
BONSIGNORI
DATA - DATE
18/05/10
PAGINA - SHEET
2 / 7
REV. N°
0
FORMATO - SIZE
A3
CODICE/N° DISEGNO - CODE/DWG NUMBER
10-76_2
CESAB
CARRELLI ELEVATORI
CODICE COLORI - COLOR CODE
A AZZURRO / LIGHT BLUE
B BIANCO / WHITE
C ARANCIO / ORANGE
G GIALLO / YELLOW
H GRIGIO / GREY
L BLU / BLUE
M MARRONE / BROWN
N NERO / BLACK
R ROSSO / RED
S ROSA / PINK
V VERDE / GREEN
Z VIOLA / VIOLET

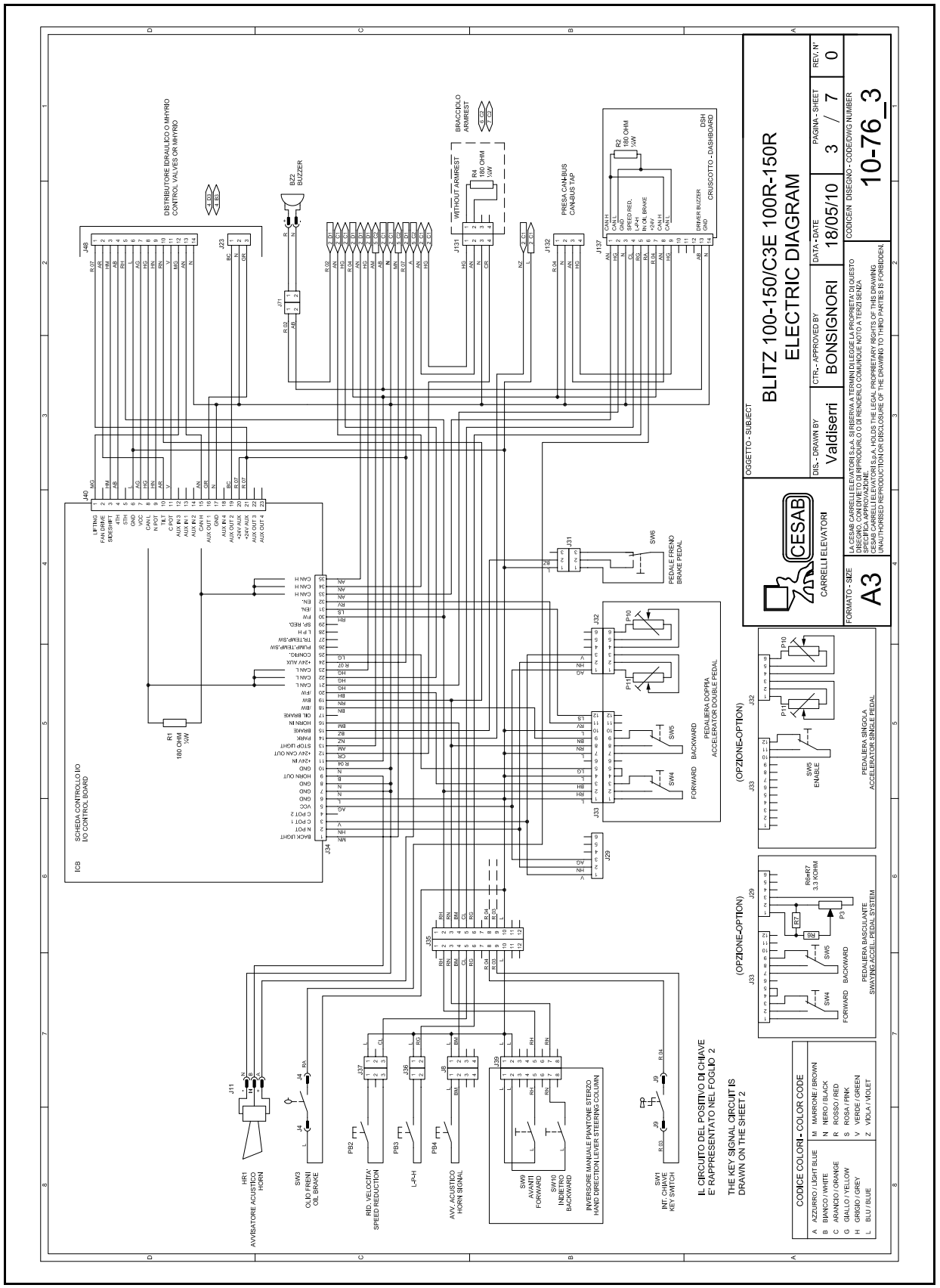
BLITZ 100-150/C3E 100R-150R
ELECTRIC DIAGRAM
OGGETTO - SUBJECT
DIS. - DRAWN BY
Valdiserri
CTR. - APPROVED BY
BONSIGNORI
DATA - DATE
18/05/10
PAGINA - SHEET
3 / 7
REV. N°
0
CODICE/N DISEGNO - CODE/DWG NUMBER
10-76_3
FORMATO - SIZE
A3
CESAB
CARRELLI ELEVATORI
SCHEDA CONTROLLO I/O
I/O CONTROL BOARD
DISTRIBUTORE IDRAULICO O MHYPRO
CONTROL VALVES OR MHYPRO
BRACCIOLO
ARMREST
WITHOUT ARMREST
PRESA CAN-BUS
CAN-BUS TAP
CRUSCOTTO - DASHBOARD
DSH
PEDALE FRENO
BRAKE PEDAL
PEDALIERA DOPPIA
ACCELERATOR DOUBLE PEDAL
PEDALIERA SINGOLA
ACCELERATOR SINGLE PEDAL
(OPZIONE-OPTION)
PEDALIERA BASCULANTE
SWAYING ACCEL. PEDAL SYSTEM
INVERSORE MANUALE PIANTONE STERZO
HAND DIRECTION LEVER STEERING COLUMN
AVVISATORE ACUSTICO
HORN
OLIO FRENI
OIL BRAKE
RID. VELOCITA'
SPEED REDUCTION
AVV. ACUSTICO
HORN SIGNAL
INT. CHIAVE
KEY SWITCH
AVANTI
FORWARD
INDIETRO
BACKWARD
IL CIRCUITO DEL POSITIVO DI CHIAVE
E' RAPPRESENTATO NEL FOGLIO 2
THE KEY SIGNAL CIRCUIT IS
DRAWN ON THE SHEET 2
CODICE COLORI - COLOR CODE
A AZZURRO / LIGHT BLUE
B BIANCO / WHITE
C ARANCIO / ORANGE
G GIALLO / YELLOW
H GRIGIO / GREY
L BLU / BLUE
M MARRONE / BROWN
N NERO / BLACK
R ROSSO / RED
S ROSA / PINK
V VERDE / GREEN
Z VIOLA / VIOLET
LA CESAB CARRELLI ELEVATORI S.p.A. SI RISERVA A TERMINI DI LEGGE LA PROPRIETA' DI QUESTO DISEGNO, CON DIVIETO DI RIPRODURLO O DI RENDERLO COMUNQUE NOTO A TERZI SENZA SPECIFICA AUTORIZZAZIONE
CESAB CARRELLI ELEVATORI S.p.A. HOLDS THE LEGAL PROPRIETARY RIGHTS OF THIS DRAWING UNAUTHORISED REPRODUCTION OR DISCLOSURE OF THE DRAWING TO THIRD PARTIES IS FORBIDDEN.

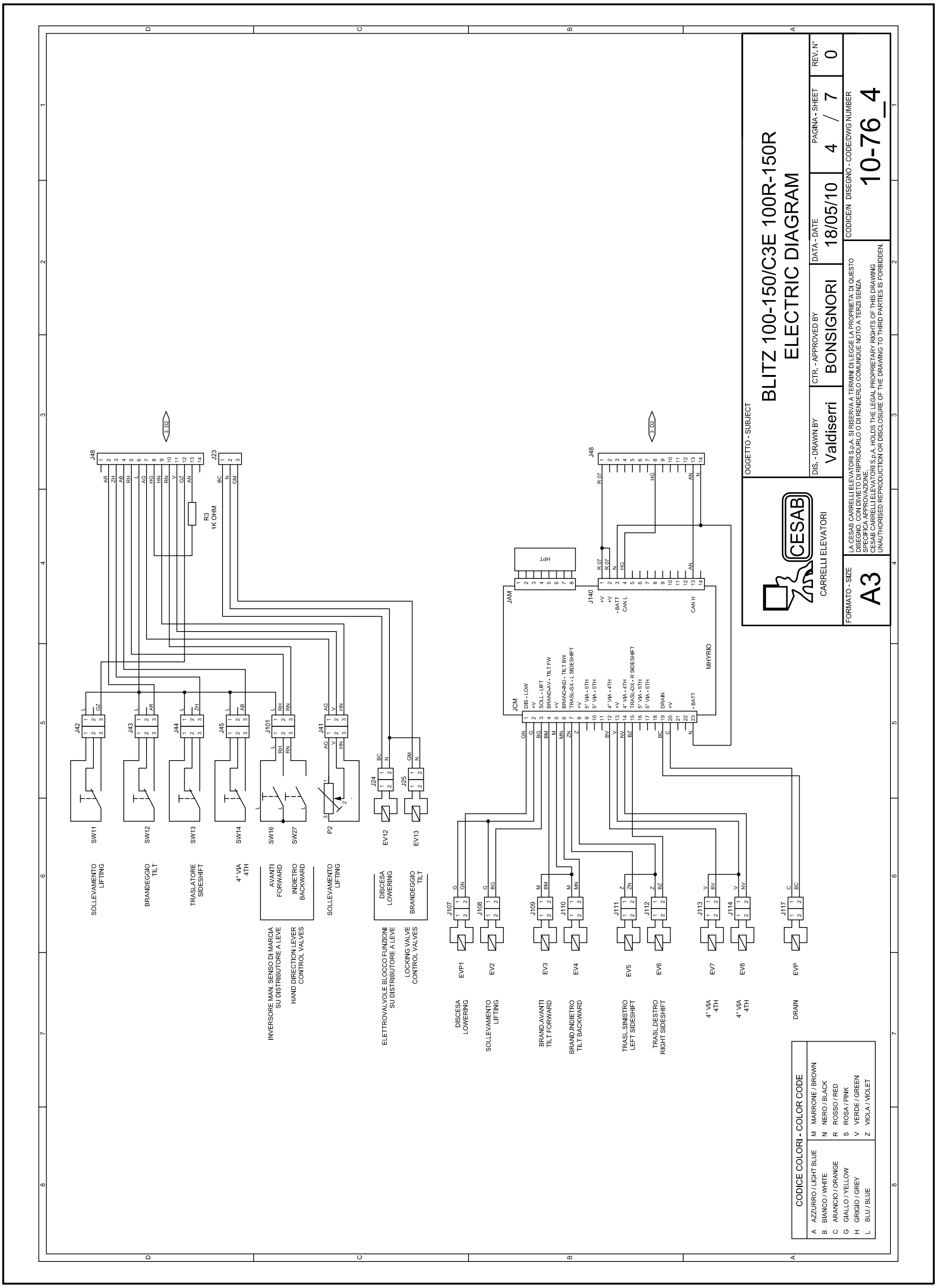

BLITZ 100-150/C3E 100R-150R
ELECTRIC DIAGRAM
OGGETTO - SUBJECT
DIS. - DRAWN BY
Valdiserri
CTR. - APPROVED BY
BONSIGNORI
DATA - DATE
18/05/10
PAGINA - SHEET
4 / 7
REV. N°
0
CODICE/N. DISEGNO - CODE/DWG NUMBER
10-76_4
FORMATO - SIZE
A3
CESAB
CARRELLI ELEVATORI
LA CESAB CARRELLI ELEVATORI S.p.A. SI RISERVA A TERMINI DI LEGGE LA PROPRIETA' DI QUESTO DISEGNO, CON DIVIETO DI RIPRODURLO O DI RENDERLO COMUNQUE NOTO A TERZI SENZA SPECIFICA APPROVAZIONE.
CESAB CARRELLI ELEVATORI S.p.A. HOLDS THE LEGAL PROPRIETARY RIGHTS OF THIS DRAWING. UNAUTHORISED REPRODUCTION OR DISCLOSURE OF THE DRAWING TO THIRD PARTIES IS FORBIDDEN.
CODICE COLORI - COLOR CODE
A AZZURRO / LIGHT BLUE
B BIANCO / WHITE
C ARANCIO / ORANGE
G GIALLO / YELLOW
H GRIGIO / GREY
L BLU / BLUE
M MARRONE / BROWN
N NERO / BLACK
R ROSSO / RED
S ROSA / PINK
V VERDE / GREEN
Z VIOLA / VIOLET
JCM
JAM
MHYRIO
HPT
J48
J23
J140
R3
1K OHM
SW11 SOLLEVAMENTO LIFTING
SW12 BRANDEGGIO TILT
SW13 TRASLATORE SIDESHIFT
SW14 4° VIA 4TH
SW16 AVANTI FORWARD
SW27 INDIETRO BACKWARD
P2 SOLLEVAMENTO LIFTING
EV12 DISCESA LOWERING
EV13 BRANDEGGIO TILT
INVERSORE MAN. SENSO DI MARCIA SU DISTRIBUTORE A LEVE
HAND DIRECTION LEVER CONTROL VALVES
ELETTROVALVOLE BLOCCO FUNZIONI SU DISTRIBUTORE A LEVE
LOCKING VALVE CONTROL VALVES
EVP1 DISCESA LOWERING
EV2 SOLLEVAMENTO LIFTING
EV3 BRAND.AVANTI TILT FORWARD
EV4 BRAND.INDIETRO TILT BACKWARD
EV5 TRASL.SINISTRO LEFT SIDESHIFT
EV6 TRASL.DESTRO RIGHT SIDESHIFT
EV7 4° VIA 4TH
EV8 4° VIA 4TH
EVP DRAIN

17

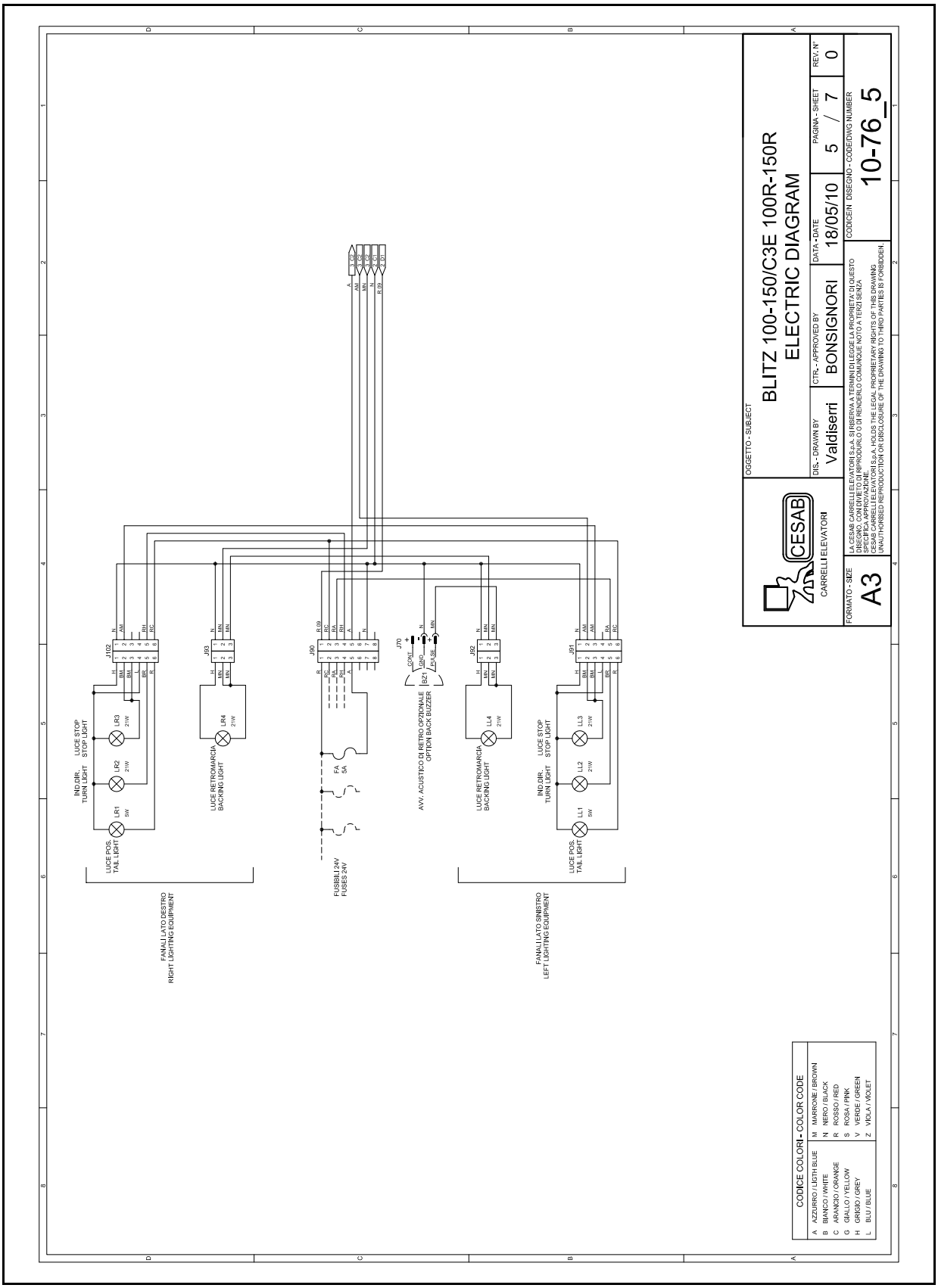
BLITZ 100-150/C3E 100R-150R
ELECTRIC DIAGRAM
OGGETTO - SUBJECT
DIS. - DRAWN BY
Valdiserri
CTR. - APPROVED BY
BONSIGNORI
DATA - DATE
18/05/10
PAGINA - SHEET
5 / 7
REV. N°
0
CODICE/N DISEGNO - CODE/DWG NUMBER
10-76_5
FORMATO - SIZE
A3
CESAB
CARRELLI ELEVATORI
LA CESAB CARRELLI ELEVATORI S.p.A. SI RISERVA A TERMINI DI LEGGE LA PROPRIETA' DI QUESTO DISEGNO, CON DIVIETO DI RIPRODURLO O DI RENDERLO COMUNQUE NOTO A TERZI SENZA SPECIFICA APPROVAZIONE.
CESAB CARRELLI ELEVATORI S.p.A. HOLDS THE LEGAL PROPRIETARY RIGHTS OF THIS DRAWING
UNAUTHORISED REPRODUCTION OR DISCLOSURE OF THE DRAWING TO THIRD PARTIES IS FORBIDDEN.
CODICE COLORI - COLOR CODE
A AZZURRO / LIGTH BLUE
B BIANCO / WHITE
C ARANCIO / ORANGE
G GIALLO / YELLOW
H GRIGIO / GREY
L BLU / BLUE
M MARRONE / BROWN
N NERO / BLACK
R ROSSO / RED
S ROSA / PINK
V VERDE / GREEN
Z VIOLA / VIOLET
FANALI LATO DESTRO
RIGHT LIGHTING EQUIPMENT
FANALI LATO SINISTRO
LEFT LIGHTING EQUIPMENT
LUCE POS.
TAIL LIGHT
IND.DIR.
TURN LIGHT
LUCE STOP
STOP LIGHT
LUCE RETROMARCIA
BACKING LIGHT
FUSIBILI 24V
FUSES 24V
AVV. ACUSTICO DI RETRO OPZIONALE
OPTION BACK BUZZER
J102
J93
J90
J70
J92
J91
LR1 5W
LR2 21W
LR3 21W
LR4 21W
LL1 5W
LL2 21W
LL3 21W
LL4 21W
FA 5A
BZ1

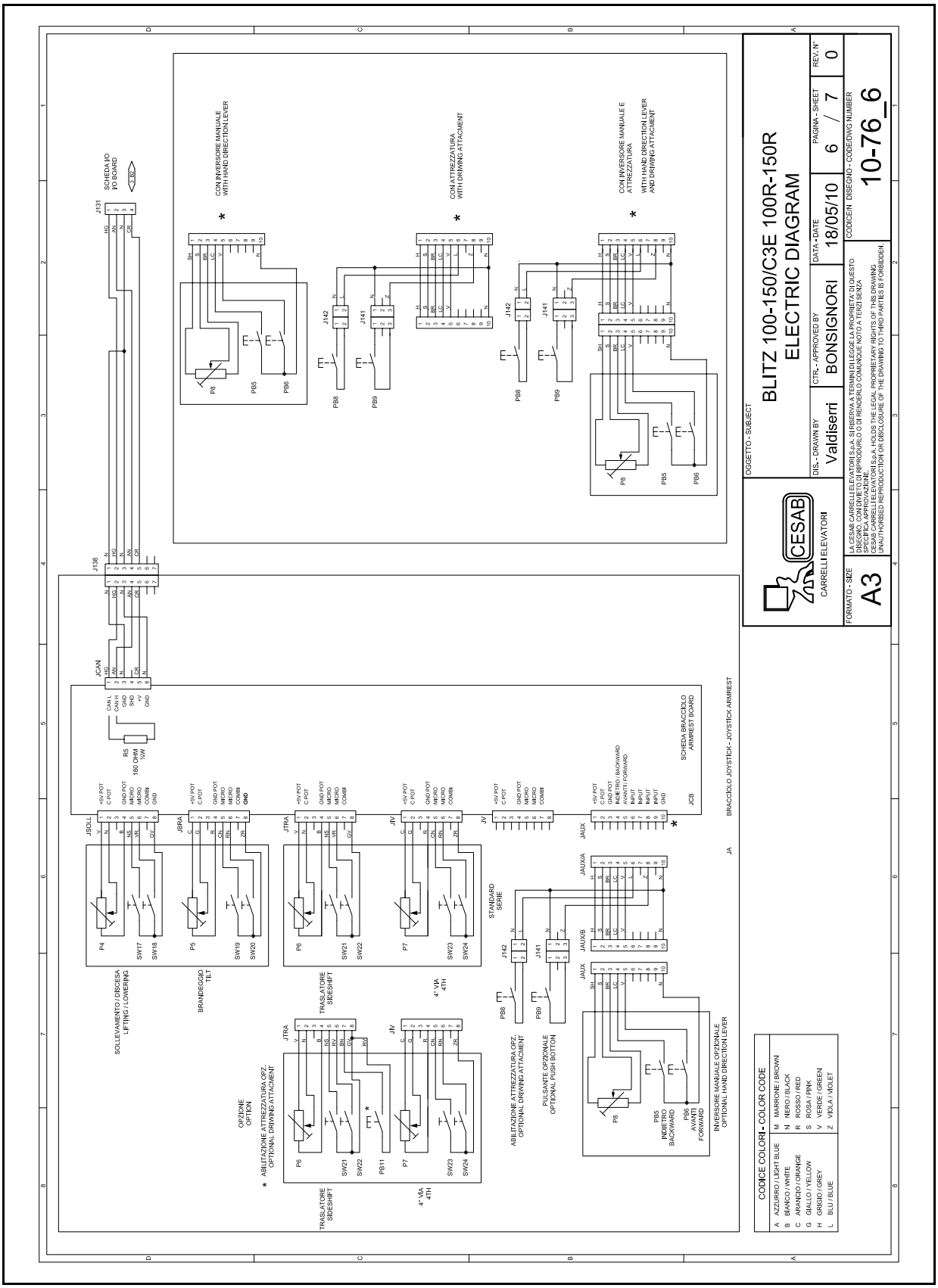
BLITZ 100-150/C3E 100R-150R
ELECTRIC DIAGRAM
CESAB
CARRELLI ELEVATORI
OGGETTO - SUBJECT
DIS. - DRAWN BY
Valdiserri
CTR. - APPROVED BY
BONSIGNORI
DATA - DATE
18/05/10
PAGINA - SHEET
6 / 7
REV. N°
0
FORMATO - SIZE
A3
CODICE/N. DISEGNO - CODE/DWG NUMBER
10-76_6
LA CESAB CARRELLI ELEVATORI S.p.A. SI RISERVA A TERMINI DI LEGGE LA PROPRIETA' DI QUESTO DISEGNO; CON DIVIETO DI RIPRODURLO O DI RENDERLO COMUNQUE NOTO A TERZI SENZA SPECIFICA AUTORIZZAZIONE
CESAB CARRELLI ELEVATORI S.p.A. HOLDS THE LEGAL PROPRIETARY RIGHTS OF THIS DRAWING UNAUTHORISED REPRODUCTION OR DISCLOSURE OF THE DRAWING TO THIRD PARTIES IS FORBIDDEN.
CON INVERSORE MANUALE
WITH HAND DIRECTION LEVER
CON ATTREZZATURA
WITH DRIVING ATTACHMENT
CON INVERSORE MANUALE E ATTREZZATURA
WITH HAND DIRECTION LEVER AND DRIVING ATTACHMENT
SCHEDA I/O
I/O BOARD
SCHEDA BRACCIOLO
ARMREST BOARD
BRACCIOLO JOYSTICK - JOYSTICK ARMREST
SOLLEVAMENTO / DISCESA
LIFTING / LOWERING
BRANDEGGIO
TILT
TRASLATORE
SIDESHIFT
4° VIA
4TH
STANDARD
SERIE
OPZIONE
OPTION
* ABILITAZIONE ATTREZZATURA OPZ.
OPTIONAL DRIVING ATTACHMENT
ABILITAZIONE ATTREZZATURA OPZ.
OPTIONAL DRIVING ATTACHMENT
PULSANTE OPZIONALE
OPTIONAL PUSH BOTTON
INVERSORE MANUALE OPZIONALE
OPTIONAL HAND DIRECTION LEVER
INDIETRO
BACKWARD
AVANTI
FORWARD
CODICE COLORI - COLOR CODE
A AZZURRO / LIGHT BLUE
B BIANCO / WHITE
C ARANCIO / ORANGE
G GIALLO / YELLOW
H GRIGIO / GREY
L BLU / BLUE
M MARRONE / BROWN
N NERO / BLACK
R ROSSO / RED
S ROSA / PINK
V VERDE / GREEN
Z VIOLA / VIOLET

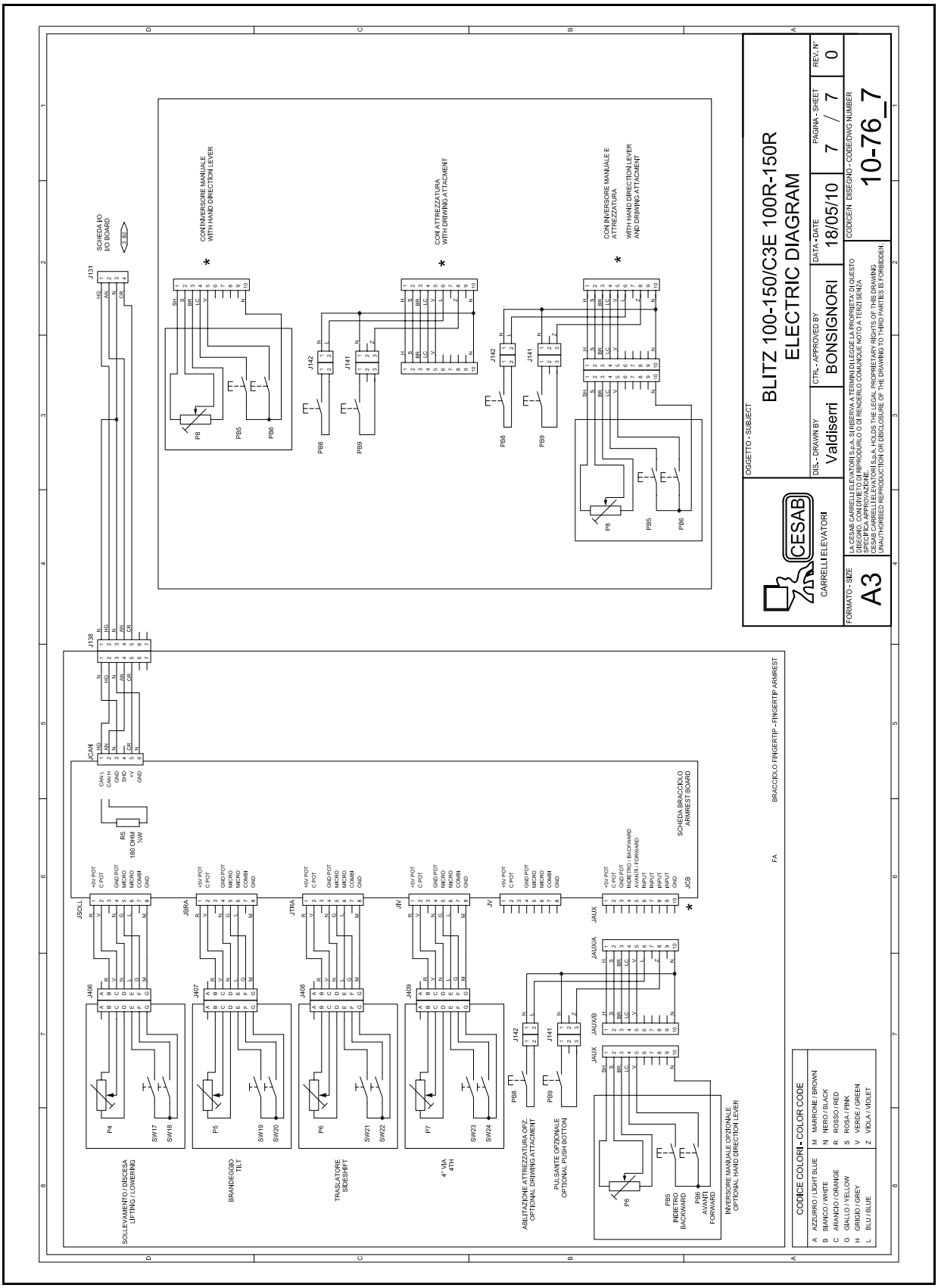
BLITZ 100-150/C3E 100R-150R
ELECTRIC DIAGRAM
CESAB
CARRELLI ELEVATORI
Valdiserri
BONSIGNORI
18/05/10
7 / 7
0
A3
10-76_7
SCHEDA I/O
I/O BOARD
CON INVERSORE MANUALE
WITH HAND DIRECTION LEVER
CON ATTREZZATURA
WITH DRIVING ATTACMENT
CON INVERSORE MANUALE E ATTREZZATURA
WITH HAND DIRECTION LEVER AND DRIVING ATTACMENT
SOLLEVAMENTO / DISCESA
LIFTING / LOWERING
BRANDEGGIO
TILT
TRASLATORE
SIDESHIFT
4° VIA
4TH
ABILITAZIONE ATTREZZATURA OPZ.
OPTIONAL DRIVING ATTACMENT
PULSANTE OPZIONALE
OPTIONAL PUSH BOTTON
INVERSORE MANUALE OPZIONALE
OPTIONAL HAND DIRECTION LEVER
SCHEDA BRACCIOLO
ARMREST BOARD
BRACCIOLO FINGERTIP - FINGERTIP ARMREST
CODICE COLORI - COLOR CODE
A AZZURRO / LIGHT BLUE
B BIANCO / WHITE
C ARANCIO / ORANGE
G GIALLO / YELLOW
H GRIGIO / GREY
L BLU / BLUE
M MARRONE / BROWN
N NERO / BLACK
R ROSSO / RED
S ROSA / PINK
V VERDE / GREEN
Z VIOLA / VIOLET

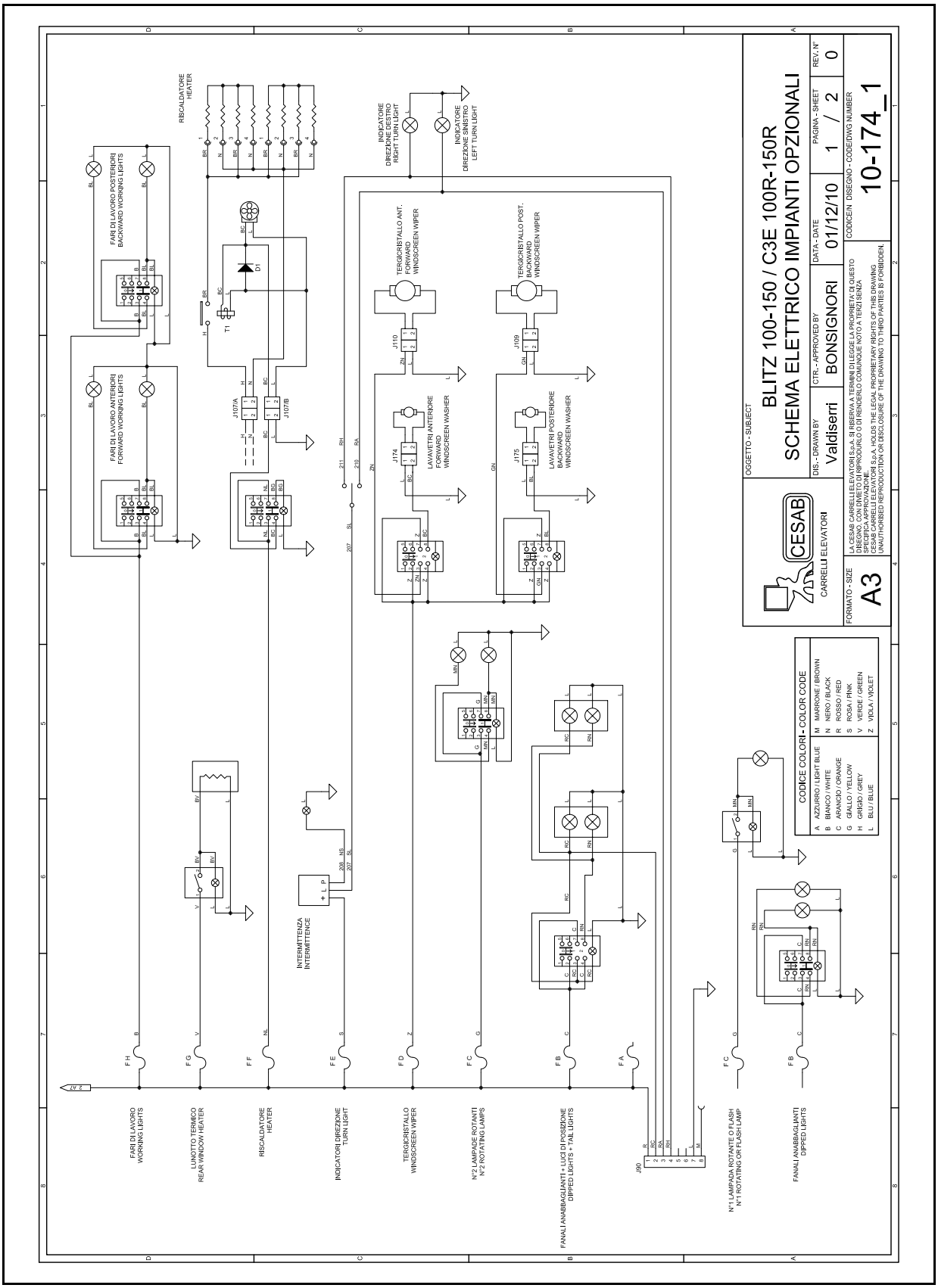
BLITZ 100-150 / C3E 100R-150R
SCHEMA ELETTRICO IMPIANTI OPZIONALI
OGGETTO - SUBJECT
DIS. - DRAWN BY
Valdiserri
CTR. - APPROVED BY
BONSIGNORI
DATA - DATE
01/12/10
PAGINA - SHEET
1 / 2
REV. N°
0
CODICE N. DISEGNO - CODE/DWG NUMBER
10-174_1
CESAB
CARRELLI ELEVATORI
FORMATO - SIZE
A3
CODICE COLORI - COLOR CODE
A AZZURRO / LIGHT BLUE
B BIANCO / WHITE
C ARANCIO / ORANGE
G GIALLO / YELLOW
H GRIGIO / GREY
L BLU / BLUE
M MARRONE / BROWN
N NERO / BLACK
R ROSSO / RED
S ROSA / PINK
V VERDE / GREEN
Z VIOLA / VIOLET
FARI DI LAVORO POSTERIORI
BACKWARD WORKING LIGHTS
FARI DI LAVORO ANTERIORI
FORWARD WORKING LIGHTS
RISCALDATORE
HEATER
INDICATORE
DIREZIONE DESTRO
RIGHT TURN LIGHT
INDICATORE
DIREZIONE SINISTRO
LEFT TURN LIGHT
TERGICRISTALLO ANT.
FORWARD
WINDSCREEN WIPER
TERGICRISTALLO POST.
BACKWARD
WINDSCREEN WIPER
LAVAVETRI ANTERIORE
FORWARD
WINDSCREEN WASHER
LAVAVETRI POSTERIORE
BACKWARD
WINDSCREEN WASHER
INTERMITTENZA
INTERMITTENCE
FARI DI LAVORO
WORKING LIGHTS
LUNOTTO TERMICO
REAR WINDOW HEATER
RISCALDATORE
HEATER
INDICATORI DIREZIONE
TURN LIGHT
TERGICRISTALLO
WINDSCREEN WIPER
N°2 LAMPADE ROTANTI
N°2 ROTATING LAMPS
FANALI ANABBAGLIANTI + LUCI DI POSIZIONE
DIPPED LIGHTS + TAIL LIGHTS
N°1 LAMPADA ROTANTE O FLASH
N°1 ROTATING OR FLASH LAMP
FANALI ANABBAGLIANTI
DIPPED LIGHTS

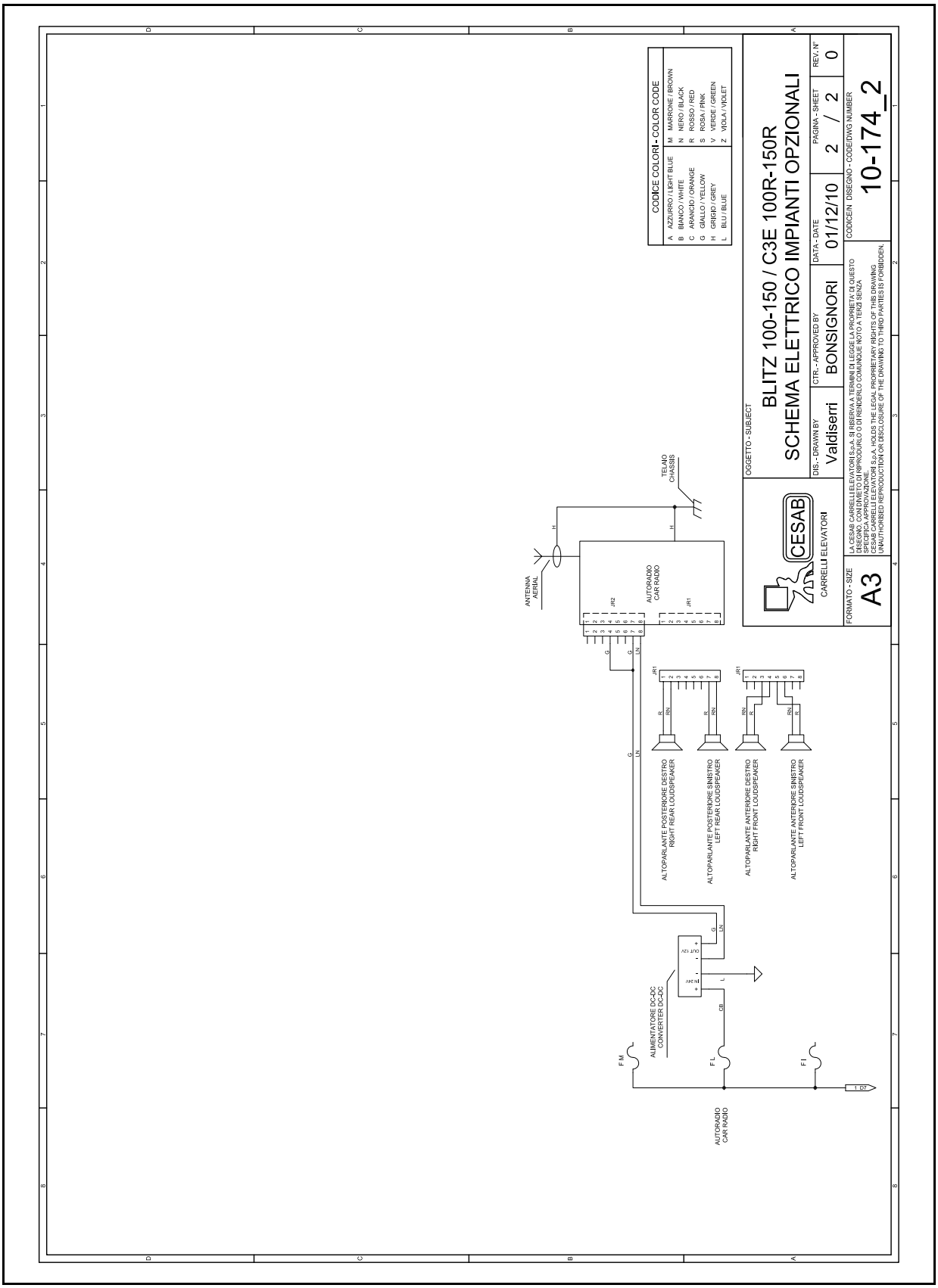
CODICE COLORI - COLOR CODE
A AZZURRO / LIGHT BLUE
B BIANCO / WHITE
C ARANCIO / ORANGE
G GIALLO / YELLOW
H GRIGIO / GREY
L BLU / BLUE
M MARRONE / BROWN
N NERO / BLACK
R ROSSO / RED
S ROSA / PINK
V VERDE / GREEN
Z VIOLA / VIOLET
OGGETTO - SUBJECT
BLITZ 100-150 / C3E 100R-150R
SCHEMA ELETTRICO IMPIANTI OPZIONALI
DIS. - DRAWN BY
Valdiserri
CTR. - APPROVED BY
BONSIGNORI
DATA - DATE
01/12/10
PAGINA - SHEET
2 / 2
REV. N°
0
CESAB
CARRELLI ELEVATORI
FORMATO - SIZE
A3
CODICE N. DISEGNO - CODE/DWG NUMBER
10-174_2
ANTENNA
AERIAL
AUTORADIO
CAR RADIO
TELAIO
CHASSIS
ALTOPARLANTE POSTERIORE DESTRO
RIGHT REAR LOUDSPEAKER
ALTOPARLANTE POSTERIORE SINISTRO
LEFT REAR LOUDSPEAKER
ALTOPARLANTE ANTERIORE DESTRO
RIGHT FRONT LOUDSPEAKER
ALTOPARLANTE ANTERIORE SINISTRO
LEFT FRONT LOUDSPEAKER
ALIMENTATORE DC-DC
CONVERTER DC-DC
AUTORADIO
CAR RADIO

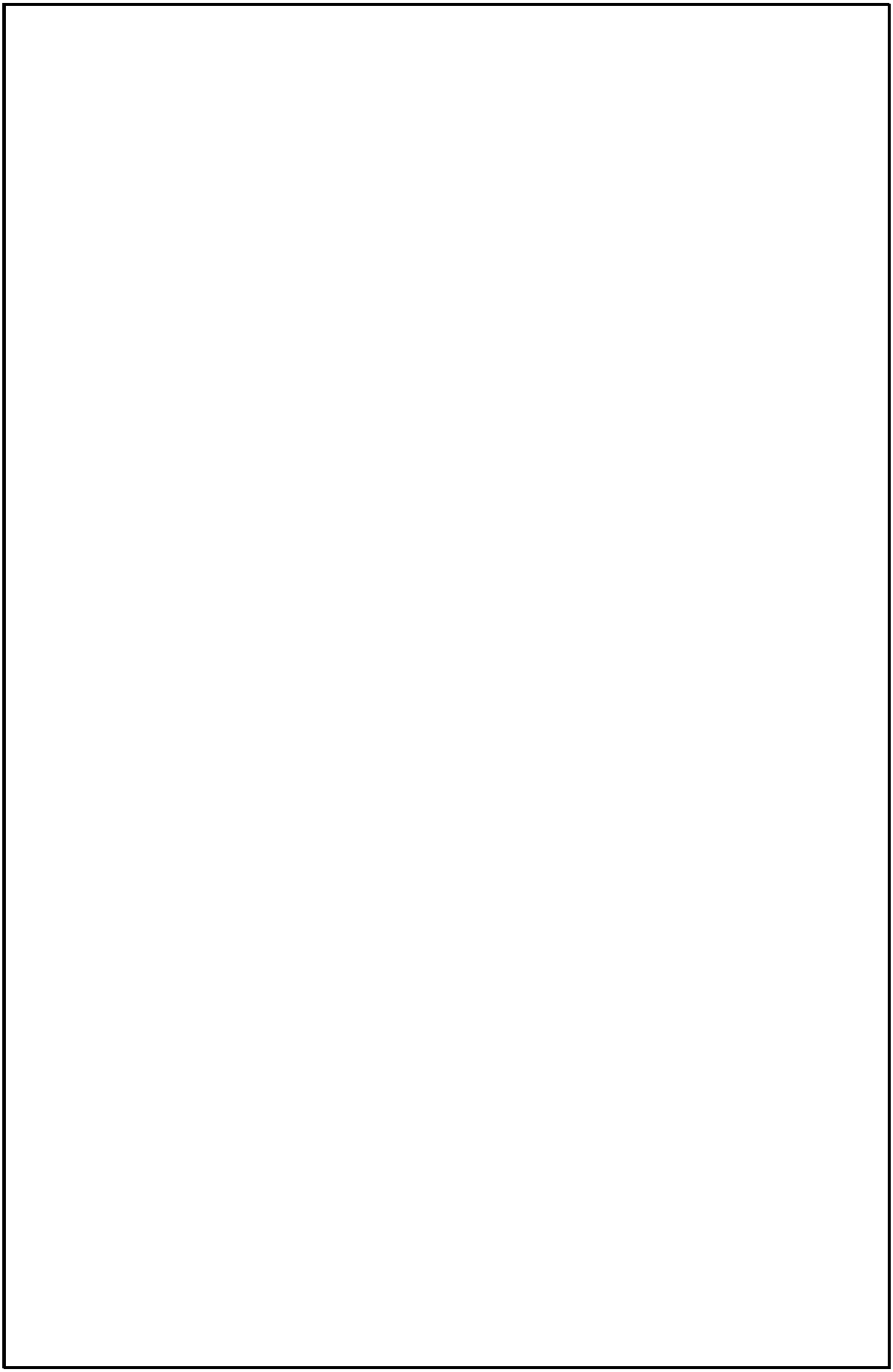

CESAB S.p.A
via Persicetana Vecchia, 10 40132 Bologna - Italy
Tel.(0039) 051.20 54 11
Fax (0039) 051.72 80 07
E-mail: cesab@cesab.it